AUTHENTICATED
U.S. GOVERNMENT
INFORMATION
GPO

FEDERAL REGISTER

Vol. 78 Monday,
No. 47 March 11, 2013

Pages 15277–15596

OFFICE OF THE FEDERAL REGISTER

The **FEDERAL REGISTER** (ISSN 0097–6326) is published daily, Monday through Friday, except official holidays, by the Office of the Federal Register, National Archives and Records Administration, Washington, DC 20408, under the Federal Register Act (44 U.S.C. Ch. 15) and the regulations of the Administrative Committee of the Federal Register (1 CFR Ch. I). The Superintendent of Documents, U.S. Government Printing Office, Washington, DC 20402 is the exclusive distributor of the official edition. Periodicals postage is paid at Washington, DC.

The **FEDERAL REGISTER** provides a uniform system for making available to the public regulations and legal notices issued by Federal agencies. These include Presidential proclamations and Executive Orders, Federal agency documents having general applicability and legal effect, documents required to be published by act of Congress, and other Federal agency documents of public interest.

Documents are on file for public inspection in the Office of the Federal Register the day before they are published, unless the issuing agency requests earlier filing. For a list of documents currently on file for public inspection, see *www.ofr.gov.*

The seal of the National Archives and Records Administration authenticates the Federal Register as the official serial publication established under the Federal Register Act. Under 44 U.S.C. 1507, the contents of the **Federal Register** shall be judicially noticed.

The **Federal Register** is published in paper and on 24x microfiche. It is also available online at no charge at *www.fdsys.gov*, a service of the U.S. Government Printing Office.

The online edition of the **Federal Register** is issued under the authority of the Administrative Committee of the Federal Register as the official legal equivalent of the paper and microfiche editions (44 U.S.C. 4101 and 1 CFR 5.10). It is updated by 6:00 a.m. each day the **Federal Register** is published and includes both text and graphics from Volume 59, 1 (January 2, 1994) forward. For more information, contact the GPO Customer Contact Center, U.S. Government Printing Office. Phone 202-512-1800 or 866-512-1800 (toll free). E-mail, *gpo@custhelp.com.*

The annual subscription price for the **Federal Register** paper edition is $749 plus postage, or $808, plus postage, for a combined **Federal Register, Federal Register** Index and List of CFR Sections Affected (LSA) subscription; the microfiche edition of the **Federal Register** including the **Federal Register** Index and LSA is $165, plus postage. Six month subscriptions are available for one-half the annual rate. The prevailing postal rates will be applied to orders according to the delivery method requested. The price of a single copy of the daily **Federal Register,** including postage, is based on the number of pages: $11 for an issue containing less than 200 pages; $22 for an issue containing 200 to 400 pages; and $33 for an issue containing more than 400 pages. Single issues of the microfiche edition may be purchased for $3 per copy, including postage. Remit check or money order, made payable to the Superintendent of Documents, or charge to your GPO Deposit Account, VISA, MasterCard, American Express, or Discover. Mail to: U.S. Government Printing Office—New Orders, P.O. Box 979050, St. Louis, MO 63197-9000; or call toll free 1-866-512-1800, DC area 202-512-1800; or go to the U.S. Government Online Bookstore site, see *bookstore.gpo.gov.*

There are no restrictions on the republication of material appearing in the **Federal Register.**

How To Cite This Publication: Use the volume number and the page number. Example: 77 FR 12345.

Postmaster: Send address changes to the Superintendent of Documents, Federal Register, U.S. Government Printing Office, Washington, DC 20402, along with the entire mailing label from the last issue received.

SUBSCRIPTIONS AND COPIES

PUBLIC

Subscriptions:

Paper or fiche	**202–512–1800**
Assistance with public subscriptions	**202–512–1806**
General online information	**202–512–1530; 1–888–293–6498**

Single copies/back copies:

Paper or fiche	**202–512–1800**
Assistance with public single copies	**1–866–512–1800 (Toll-Free)**

FEDERAL AGENCIES

Subscriptions:

Paper or fiche	**202–741–6005**
Assistance with Federal agency subscriptions	**202–741–6005**

FEDERAL REGISTER WORKSHOP

THE FEDERAL REGISTER: WHAT IT IS AND HOW TO USE IT

FOR: Any person who uses the Federal Register and Code of Federal Regulations.

WHO: Sponsored by the Office of the Federal Register.

WHAT: Free public briefings (approximately 3 hours) to present:

1. The regulatory process, with a focus on the Federal Register system and the public's role in the development of regulations.
2. The relationship between the Federal Register and Code of Federal Regulations.
3. The important elements of typical Federal Register documents.
4. An introduction to the finding aids of the FR/CFR system.

WHY: To provide the public with access to information necessary to research Federal agency regulations which directly affect them. There will be no discussion of specific agency regulations.

WHEN: Tuesday, March 12, 2013
9 a.m.–12:30 p.m.

WHERE: Office of the Federal Register
Conference Room, Suite 700
800 North Capitol Street, NW.
Washington, DC 20002

RESERVATIONS: (202) 741–6008

Printed on recycled paper.

Contents

Federal Register

Vol. 78, No. 47

Monday, March 11, 2013

Centers for Disease Control and Prevention
NOTICES
Agency Information Collection Activities; Proposals, Submissions, and Approvals, 15366–15369
Meetings:
Board of Scientific Counselors, Office of Public Health Preparedness and Response, 15369
Requests for Nominations:
Candidates to Serve on the Advisory Committee on Immunization Practices, 15370

Coast Guard
RULES
Drawbridge Operations:
Columbia River, Vancouver, WA, 15293
Upper Mississippi River, Rock Island, IL, 15292
West Bay, Osterville, MA, 15292–15293
Safety Zones:
Patrick's Day Fireworks; Manitowoc River, Manitowoc, WI, 15293–15296

Commerce Department
See International Trade Administration
See National Oceanic and Atmospheric Administration
See National Telecommunications and Information Administration

Commission of Fine Arts
NOTICES
Meetings:
Commission of Fine Arts, 15357

Comptroller of the Currency
NOTICES
Agency Information Collection Activities; Proposals, Submissions, and Approvals
Company-Run Annual Stress Test Reporting Template, etc., 15403–15405

Department of Transportation
See Pipeline and Hazardous Materials Safety Administration

Education Department
NOTICES
Agency Information Collection Activities; Proposals, Submissions, and Approvals:
State of Preschool Survey 2013–2015, 15357–15358

Energy Department
See Federal Energy Regulatory Commission
NOTICES
Preferred Alternatives:
Certain Tanks, Final Tank Closure and Waste Management; Hanford Site, Richland, WA, 15358–15359

Environmental Protection Agency
RULES
Final Authorization of State Hazardous Waste Management Program Revision:
New York, 15299–15303
Implementation Plans; Approvals and Promulgations:
New Mexico; New Source Review Preconstruction Permitting Program, etc., 15296–15299
PROPOSED RULES
Final Authorization of State Hazardous Waste Management Program Revisions:
New York, 15338

Federal Aviation Administration
RULES
Airworthiness Directives:
Airbus Airplanes, 15279–15280
Eurocopter France Helicopters, 15277–15279
The Boeing Company Airplanes, 15281–15283
PROPOSED RULES
Airworthiness Directives:
Airbus Airplanes, 15335–15337
The Boeing Company Airplanes, 15332–15335

Federal Energy Regulatory Commission
NOTICES
Combined Filings, 15359–15364
Environmental Assessments; Availability, etc.:
Gulf Crossing Pipeline Co. LLC, Panda Power Lateral Project, 15364–15366
Preliminary Permit Applications:
Archon Energy 1, Inc., 15366

Fine Arts Commission
See Commission of Fine Arts

Fish and Wildlife Service
NOTICES
Draft Habitat Conservation Plans:
Application for Incidental Take Permit; Enbridge Pipelines (Lakehead), LLC, 15374–15376

Food and Drug Administration
NOTICES
Draft Guidance for Industry and Staff; Availability:
Recommendations for Labeling Medical Products to Inform Users the Product or Product Container Is Not Made With Natural Rubber Latex, 15370–15371
Meetings:
Drug Development for Chronic Fatigue Syndrome and Myalgic Encephalomyelitis; Workshop, 15371–15373

Foreign Claims Settlement Commission
NOTICES
Completion of Claims Adjudication Programs, 15377

Health and Human Services Department
See Centers for Disease Control and Prevention
See Food and Drug Administration
See National Institutes of Health
RULES
Patient Protection and Affordable Care Act:
Amendments to the HHS Notice of Benefit and Payment Parameters for 2014, 15541–15552
HHS Notice of Benefit and Payment Parameters for 2014, 15410–15541

PROPOSED RULES
Patient Protection and Affordable Care Act:
Establishment of Exchanges and Qualified Health Plans; Small Business Health Options Program, 15553–15558

Homeland Security Department
See Coast Guard

Housing and Urban Development Department
NOTICES
Formula Allocations and Program Requirements for Neighborhood Stabilization Program Formula Grants; Correction, 15374

Interior Department
See Fish and Wildlife Service

Internal Revenue Service
PROPOSED RULES
Truncated Taxpayer Identification Numbers; Hearing Cancellation, 15337
NOTICES
Agency Information Collection Activities; Proposals, Submissions, and Approvals, 15405–15407
Privacy Act; Systems of Records, 15407–15408

International Trade Administration
NOTICES
Auto Supply Chain Trade Mission to Mexico City and Monterrey, Mexico, 15341–15343
Multi-Sector Trade Mission to Colombia, 15343–15346
Secretarial Infrastructure Business Development Mission to Brazil, Colombia, and Panama, 15346–15349
Trade Mission to Central America in conjunction with the Trade Americas – Opportunities in Central America Conference, 15349–15351
U.S. Civil Nuclear Trade Policy Mission to Hanoi, Vietnam, Beijing and Sanmen, China, 15351–15355

International Trade Commission
NOTICES
Determinations:
Corrosion-Resistant Carbon Steel Flat Products from Germany and Korea, 15376

Justice Department
See Foreign Claims Settlement Commission
NOTICES
Proposed Consent Decree Amendments under the Clean Air Act, etc., 15376–15377

Labor Department
See Veterans Employment and Training Service
NOTICES
Agency Information Collection Activities; Proposals, Submissions, and Approvals:
Requests to Approve Conformed Wage Classifications and Unconventional Fringe Benefit Plans, etc., 15377–15378

National Aeronautics and Space Administration
NOTICES
Meetings:
Science Committee, Planetary Science Subcommittee, 15378

National Credit Union Administration
NOTICES
Agency Information Collection Activities; Proposals, Submissions, and Approvals, 15378–15383

National Institutes of Health
NOTICES
Meetings:
Center for Scientific Review, 15373–15374

National Oceanic and Atmospheric Administration
PROPOSED RULES
Fisheries of the Caribbean, Gulf of Mexico, and South Atlantic:
Reef Fish Fishery of Puerto Rico and U.S. Virgin Islands; Parrotfish Management Measures in St. Croix, 15338–15340
NOTICES
Agency Information Collection Activities; Proposals, Submissions, and Approvals:
Pilot Project Assessing Economic Benefits of Marine Debris Removal, 15355–15356
Meetings:
Caribbean Fishery Management Council, 15356–15357

National Telecommunications and Information Administration

NOTICES
Meetings:
First Responder Network Authority Board, 15357

Nuclear Regulatory Commission
NOTICES
Approvals of Direct Transfers of Licenses and Issuances of License Amendments:
American Centrifuge Operating, LLC, 15383–15385
Facility Operating and Combined Licenses:
Applications and Amendments Involving No Significant Hazards; Correction, 15385

Personnel Management Office
RULES
Patient Protection and Affordable Care Act:
Establishment of the Multi-State Plan Program for the Affordable Insurance Exchanges, 15560–15596

Pipeline and Hazardous Materials Safety Administration
RULES
Hazardous Materials:
Miscellaneous Amendments; Retrospective Regulatory Review, 15303–15331

Securities and Exchange Commission
NOTICES
Self-Regulatory Organizations; Proposed Rule Changes:
NASDAQ OMX BX, Inc., 15385–15392
NASDAQ Stock Market LLC, 15392–15394
New York Stock Exchange LLC, 15394–15402
Trading Suspension Orders:
Xytos, Inc., 15402

Small Business Administration
NOTICES
Agency Information Collection Activities; Proposals, Submissions, and Approvals, 15402

Susquehanna River Basin Commission
NOTICES
Projects Approved for Consumptive Uses of Water, 15402–15403

Transportation Department
See Federal Aviation Administration
See Pipeline and Hazardous Materials Safety Administration

Treasury Department
See Comptroller of the Currency
See Internal Revenue Service

Veterans Employment and Training Service
RULES
Uniform National Threshold Entered Employment Rate for Veterans, 15283–15292

Separate Parts In This Issue

Part II
Health and Human Services Department, 15410–15558

Part III
Personnel Management Office, 15560–15596

Reader Aids
Consult the Reader Aids section at the end of this page for phone numbers, online resources, finding aids, reminders, and notice of recently enacted public laws.

To subscribe to the Federal Register Table of Contents LISTSERV electronic mailing list, go to http://listserv.access.gpo.gov and select Online mailing list archives, FEDREGTOC-L, Join or leave the list (or change settings); then follow the instructions.

CFR PARTS AFFECTED IN THIS ISSUE

A cumulative list of the parts affected this month can be found in the Reader Aids section at the end of this issue.

14 CFR
39 (3 documents) 15277, 15279, 15281
Proposed Rules:
39 (2 documents) 15332, 15335

20 CFR
1001.....15283

26 CFR
Proposed Rules:
1.....15337
301.....15337

33 CFR
117 (3 documents) 15292, 15293
165.....15293

40 CFR
52.....15296
271.....15299
Proposed Rules:
271.....15338

45 CFR
153 (2 documents) 15410, 15541
155.....15410
156 (2 documents) 15410, 15541
157.....15410
158.....15410
800.....15560
Proposed Rules:
155.....15553
156.....15553

49 CFR
105.....15303
171.....15303
172.....15303
173.....15303
177.....15303
178.....15303
180.....15303

50 CFR
Proposed Rules:
622.....15338

Rules and Regulations

Federal Register

Vol. 78, No. 47

Monday, March 11, 2013

This section of the FEDERAL REGISTER contains regulatory documents having general applicability and legal effect, most of which are keyed to and codified in the Code of Federal Regulations, which is published under 50 titles pursuant to 44 U.S.C. 1510.

The Code of Federal Regulations is sold by the Superintendent of Documents. Prices of new books are listed in the first FEDERAL REGISTER issue of each week.

DEPARTMENT OF TRANSPORTATION

Federal Aviation Administration

14 CFR Part 39

[Docket No. FAA–2012–1015; Directorate Identifier 2007–SW–069–AD; Amendment 39–17363; AD 2013–04–06]

RIN 2120–AA64

Airworthiness Directives; Eurocopter France Helicopters

AGENCY: Federal Aviation Administration (FAA), DOT.

ACTION: Final rule.

SUMMARY: We are adopting a new airworthiness directive (AD) for the Eurocopter France (Eurocopter) Model AS332C, AS332L, and AS332L1 helicopters. This AD requires modifying the main landing gear control panel (control panel) 33G, connector 100G, and wiring. It also requires tests to ensure that these modifications function correctly. This AD was prompted by reports of electro-valve power supply disruptions while a helicopter is on the ground, causing the landing gear to retract and the helicopter nose to drop. This results in damage to the forward section of the helicopter's bottom structure. The actions of this AD are intended to prevent an uncommanded landing gear retraction that would cause the helicopter nose to drop and hit the ground while the rotor blades are spinning.

DATES: This AD is effective April 15, 2013.

The Director of the Federal Register approved the incorporation by reference of a certain document listed in this AD as of April 15, 2013.

ADDRESSES: For service information identified in this AD, contact American Eurocopter Corporation, 2701 N. Forum Drive, Grand Prairie, TX 75052, telephone (972) 641–0000 or (800) 232–0323, fax (972) 641–3775, or at *http://www.eurocopter.com/techpub.* You may review the referenced service information at the FAA, Office of the Regional Counsel, Southwest Region, 2601 Meacham Blvd., Room 663, Fort Worth, Texas 76137.

Examining the AD Docket

You may examine the AD docket on the Internet at *http://www.regulations.gov* or in person at the Docket Operations Office between 9 a.m. and 5 p.m., Monday through Friday, except Federal holidays. The AD docket contains this AD, any incorporated-by-reference service information, the economic evaluation, any comments received, and other information. The street address for the Docket Operations Office (phone: 800–647–5527) is U.S. Department of Transportation, Docket Operations Office, M–30, West Building Ground Floor, Room W12–140, 1200 New Jersey Avenue SE., Washington, DC 20590.

FOR FURTHER INFORMATION CONTACT: George Schwab, Aviation Safety Engineer, FAA, Rotorcraft Directorate, Safety Management Group, 2601 Meacham Blvd., Fort Worth, Texas, 76137; telephone: (817) 222–5114; fax: (817) 222–5961; email: *george.schwab@faa.gov.*

SUPPLEMENTARY INFORMATION:

Discussion

On September 25, 2012, at 77 FR 58973, the **Federal Register** published our notice of proposed rulemaking (NPRM), which proposed to amend 14 CFR part 39 to include an AD that would apply to Eurocopter Model AS332C, AS332L, and AS332L1 helicopters not modified per modification (MOD) 0723817, MOD 0725670, MOD 332P083218 or MOD 332A088381, with a control panel 33G, part number 332A67–1623–00, –06, –0610, or –0651. That NPRM proposed to require modifying the control panel 33G, connector 100G, and wiring. It also proposed to require tests to ensure that these modifications function correctly. The proposed requirements were intended to prevent an uncommanded landing gear retraction that would cause the helicopter nose to drop and hit the ground while the rotor blades are spinning.

The European Aviation Safety Agency (EASA), which is the Technical Agent for the Member States of the European Union, has issued EASA AD No. 2006–0152, dated May 30, 2006, to correct an unsafe condition for Eurocopter Model AS332C, AS332C1, AS332L, and AS332L1 helicopters. EASA advises of electro-valve power supply disruptions, which caused the landing gear to retract and the helicopter to drop, resulting in damage to the forward section of the helicopter's bottom structure. AD 2006–0152 requires compliance with Eurocopter Alert Service Bulletin (ASB) No. 32.00.18, Revision 1, dated March 27, 2006, or later revisions and supersedes Direction Generale de L'Aviation Civile France AD No. F–2005–100, dated June 22, 2005.

Comments

We gave the public the opportunity to participate in developing this AD, but we received no comments on the NPRM (77 FR 58973, September 25, 2012).

FAA's Determination

These helicopters have been approved by the aviation authority of France and are approved for operation in the United States. Pursuant to our bilateral agreement with France, EASA, its technical representative, has notified us of the unsafe condition described in the EASA AD. We are issuing this AD because we evaluated all information provided by EASA and determined the unsafe condition exists and is likely to exist or develop on other helicopters of these same type designs and that air safety and the public interest require adopting the AD requirements as proposed.

Differences Between This AD and the EASA AD

This AD differs from the EASA AD as follows:

- This AD requires compliance within 90 days, while the EASA AD requires compliance within 3 months. The EASA AD also addresses spare parts, and this AD does not address spare parts.
- The EASA AD requires a repeat of the tests for helicopters that have been modified in compliance with AD F–2005–100, and this AD does not.
- The EASA AD also applies to the Model AS332C1 helicopter, and this AD does not because this model does not have an FAA-issued type certificate.

Related Service Information

We reviewed Eurocopter ASB No. 32.00.18, Revision 2, dated July 12, 2010, for Model AS332C, AS332C1, AS332L, and AS332L1 helicopters and military Model AS332B, AS332B1, AS332M, AS332M1, AS332F1 helicopters with the specified control panel 33G. That ASB states that electrical interferences on the solenoid valve power supply line have caused untimely retraction of the main landing gear, causing helicopters to sink, resulting in damage to the front section of the helicopter's bottom structure. The ASB describes procedures for modifying the main landing gear control tab on the control panel 33G, replacing the fixed connector on the control panel 33G, replacing the removable connector on the corresponding wiring, and testing the affected systems to ensure that these modifications function correctly. The ASB states that these actions are intended to prevent untimely power supply to the solenoid valve when the main landing gear control tab is on ''extended'' and to avoid main landing gear retraction. EASA AD 2006–0152 classified portions of the ASB as mandatory.

Costs of Compliance

We estimate that this AD affects three helicopters of U.S. registry. We estimate the following costs to comply with this AD:

We estimate that modification of the control panel, connector, and wiring takes one work hour to complete at $85 per hour, and that parts cost $293. Performing function tests takes about 4.5 hours to complete, for a total labor cost of $383. Thus, we estimate a total cost per helicopter of $761, and a total cost of $2,283 for the fleet.

We do not control warranty coverage. Accordingly, we have included all costs in our cost estimate.

Authority for This Rulemaking

Title 49 of the United States Code specifies the FAA's authority to issue rules on aviation safety. Subtitle I, section 106, describes the authority of the FAA Administrator. Subtitle VII: Aviation Programs, describes in more detail the scope of the Agency's authority.

We are issuing this rulemaking under the authority described in Subtitle VII, Part A, Subpart III, Section 44701: ''General requirements.'' Under that section, Congress charges the FAA with promoting safe flight of civil aircraft in air commerce by prescribing regulations for practices, methods, and procedures the Administrator finds necessary for safety in air commerce. This regulation is within the scope of that authority because it addresses an unsafe condition that is likely to exist or develop on helicopters identified in this rulemaking action.

Regulatory Findings

This AD will not have federalism implications under Executive Order 13132. This AD will not have a substantial direct effect on the States, on the relationship between the national government and the States, or on the distribution of power and responsibilities among the various levels of government.

For the reasons discussed above, I certify that this AD:

(1) Is not a ''significant regulatory action'' under Executive Order 12866;

(2) Is not a ''significant rule'' under DOT Regulatory Policies and Procedures (44 FR 11034, February 26, 1979);

(3) Will not affect intrastate aviation in Alaska to the extent that it justifies making a regulatory distinction; and

(4) Will not have a significant economic impact, positive or negative, on a substantial number of small entities under the criteria of the Regulatory Flexibility Act.

We prepared an economic evaluation of the estimated costs to comply with this AD and placed it in the AD docket.

List of Subjects in 14 CFR Part 39

Air transportation, Aircraft, Aviation safety, Incorporation by reference, Safety.

Adoption of the Amendment

Accordingly, under the authority delegated to me by the Administrator, the FAA amends 14 CFR part 39 as follows:

PART 39—AIRWORTHINESS DIRECTIVES

■ 1. The authority citation for part 39 continues to read as follows:

Authority: 49 U.S.C. 106(g), 40113, 44701.

§ 39.13 [Amended]

■ 2. The FAA amends § 39.13 by adding the following new airworthiness directive (AD):

2013–04–06 Eurocopter France (Eurocopter): Amendment 39–17363; Docket No. FAA–2012–1015; Directorate Identifier 2007–SW–069–AD.

(a) Applicability

This AD applies to Eurocopter Model AS332C, AS332L, and AS332L1 helicopters not modified per modification (MOD) 0723817, MOD 0725670, MOD 332P083218 or MOD 332A088381, with a main landing gear control panel (control panel) 33G, part number (P/N) 332A67–1623–00, –06, –0610, or –0651; certificated in any category.

(b) Unsafe Condition

This AD defines the unsafe condition as an uncommanded landing gear retraction, which could cause the helicopter nose to drop and hit the ground while the rotor blades are spinning.

(c) Effective Date

This AD becomes effective April 15, 2013.

(d) Compliance

You are responsible for performing each action required by this AD within the specified compliance time unless it has already been accomplished prior to that time.

(e) Required Actions

Within 90 days, modify the control panel 33G and connector 100G, route the 1GA5103E wiring, and perform the tests in accordance with the Accomplishment Instructions, Paragraphs 2.B 2.a. through 2.B.3.d., and as depicted in figures 1 and 2, of Eurocopter Alert Service Bulletin No 32.00.18, Revision 2, dated July 12, 2010.

(f) Alternative Methods of Compliance (AMOCs)

(1) The Manager, Safety Management Group, FAA, may approve AMOCs for this AD. Send your proposal to: George Schwab, Aviation Safety Engineer, FAA, Rotorcraft Directorate, Safety Management Group, 2601 Meacham Blvd., Fort Worth, Texas, 76137; telephone: (817) 222–5114; fax: (817) 222–5961; email: *george.schwab@faa.gov.*

(2) For operations conducted under a 14 CFR part 119 operating certificate or under 14 CFR part 91, subpart K, we suggest that you notify your principal inspector, or lacking a principal inspector, the manager of the local flight standards district office or certificate holding district office, before operating any aircraft complying with this AD through an AMOC.

(g) Additional Information

The subject of this AD is addressed in European Aviation Safety Agency AD No. 2006–0152, dated May 30, 2006.

(h) Subject

Joint Aircraft Service Component (JASC) Code: 3230, landing gear retract/extend system.

(i) Material Incorporated by Reference

(1) The Director of the Federal Register approved the incorporation by reference (IBR) of the service information listed in this paragraph under 5 U.S.C. 552(a) and 1 CFR part 51.

(2) You must use this service information as applicable to do the actions required by this AD, unless the AD specifies otherwise.

(i) Eurocopter France Alert Service Bulletin No. 32.00.18, Revision 2, dated July 12, 2010.

(ii) Reserved.

(3) For Eurocopter service information identified in this AD, contact American Eurocopter Corporation, 2701 N. Forum Drive, Grand Prairie, TX 75052, telephone (972) 641–0000 or (800) 232–0323, fax (972) 641–3775, or at *http://www.eurocopter.com/techpub.*

(4) You may view this service information at FAA, Office of the Regional Counsel, Southwest Region, 2601 Meacham Blvd., Room 663, Fort Worth, Texas 76137. For information on the availability of this material at the FAA, call (817) 222–5110.

(5) You may view this service information that is incorporated by reference at the National Archives and Records Administration (NARA). For information on the availability of this material at NARA, call (202) 741–6030, or go to: *http://www.archives.gov/federal-register/cfr/ibr-locations.html.*

Issued in Fort Worth, Texas, on February 8, 2013.

Kim Smith,

Manager, Rotorcraft Directorate, Aircraft Certification Service.

[FR Doc. 2013–04224 Filed 3–8–13; 8:45 am]

BILLING CODE 4910–13–P

DEPARTMENT OF TRANSPORTATION

Federal Aviation Administration

14 CFR Part 39

[Docket No. FAA–2012–1106; Directorate Identifier 2012–NM–084–AD; Amendment 39–17341; AD 2013–03–06]

RIN 2120–AA64

Airworthiness Directives; Airbus Airplanes

AGENCY: Federal Aviation Administration (FAA), Department of Transportation (DOT).

ACTION: Final rule.

SUMMARY: We are adopting a new airworthiness directive (AD) for all Airbus Model A330–200 Freighter, –200, and –300 series airplanes; and Model A340–200, –300, –500, and –600 series airplanes. This AD was prompted by a report that erroneous height indication by one radio altimeter with engaged flare and retard mode, in case of go-around, might lead to a temporary loss of airplane longitudinal control. This AD requires revising the airplane flight manual. We are issuing this AD to ensure that the flightcrew applies the appropriate operational procedures in the event of an erroneous indication of the radio altimeter, which could result in temporary loss of airplane longitudinal control.

DATES: This AD becomes effective April 15, 2013.

The Director of the Federal Register approved the incorporation by reference of certain publications listed in this AD as of April 15, 2013.

ADDRESSES: You may examine the AD docket on the Internet at *http://www.regulations.gov* or in person at the U.S. Department of Transportation, Docket Operations, M–30, West Building Ground Floor, Room W12–140, 1200 New Jersey Avenue SE., Washington, DC.

FOR FURTHER INFORMATION CONTACT: Vladimir Ulyanov, Aerospace Engineer, International Branch, ANM–116, Transport Airplane Directorate, FAA 1601 Lind Avenue SW., Renton, Washington 98057–3356; telephone (425) 227–1138; fax (425) 227–1149.

SUPPLEMENTARY INFORMATION:

Discussion

We issued a notice of proposed rulemaking (NPRM) to amend 14 CFR part 39 to include an AD that would apply to the specified products. That NPRM was published in the **Federal Register** on October 25, 2012 (77 FR 65146). That NPRM proposed to correct an unsafe condition for the specified products. The Mandatory Continuing Airworthiness Information (MCAI) states:

> Airbus performed tests to investigate the consequences of one radio altimeter providing an erroneous indication.
>
> These tests concluded that with engaged flare and retard mode, in case of go-around, the situation may lead to a temporary loss of aeroplane longitudinal control.
>
> To address this condition, Airbus issued a new Airplane Flight Manual (AFM) operational procedure.
>
> For the reasons described above, this [European Aviation Safety Agency] AD requires amendment of the applicable AFM to ensure that the flight crew applies the appropriate operational procedures.

You may obtain further information by examining the MCAI in the AD docket.

Comments

We gave the public the opportunity to participate in developing this AD. We considered the comment received. Air Line Pilots Association, International, supported the NPRM (77 FR 65146, October 25, 2012).

Explanation of Changes Made to This AD

We have revised paragraph (g) and Note 1 to paragraph (g) of this AD to remove reference to inserting a copy of this AD into the AFM as a method of complying with the requirements of paragraph (g) of this AD. Inserting a copy of this AD into the AFM does not address the unsafe condition identified in this AD. This language was erroneously included in the NPRM (77 FR 65146, October 25, 2012), and has, therefore, been removed from this AD.

Conclusion

We reviewed the available data, including the comment received, and determined that air safety and the public interest require adopting the AD with the changes described previously—and minor editorial changes. We have determined that these minor changes:

- Are consistent with the intent that was proposed in the NPRM (77 FR 65146, October 25, 2012) for correcting the unsafe condition; and
- Do not add any additional burden upon the public than was already proposed in the NPRM (77 FR 65146, October 25, 2012).

Costs of Compliance

We estimate that this AD will affect 64 products of U.S. registry. We also estimate that it will take about 1 work-hour per product to comply with the basic requirements of this AD. The average labor rate is $85 per work-hour. Based on these figures, we estimate the cost of this AD to the U.S. operators to be $5,440, or $85 per product.

Authority for This Rulemaking

Title 49 of the United States Code specifies the FAA's authority to issue rules on aviation safety. Subtitle I, section 106, describes the authority of the FAA Administrator. ''Subtitle VII: Aviation Programs,'' describes in more detail the scope of the Agency's authority.

We are issuing this rulemaking under the authority described in ''Subtitle VII, Part A, Subpart III, Section 44701: General requirements.'' Under that section, Congress charges the FAA with promoting safe flight of civil aircraft in air commerce by prescribing regulations for practices, methods, and procedures the Administrator finds necessary for safety in air commerce. This regulation is within the scope of that authority because it addresses an unsafe condition that is likely to exist or develop on products identified in this rulemaking action.

Regulatory Findings

We determined that this AD will not have federalism implications under Executive Order 13132. This AD will not have a substantial direct effect on the States, on the relationship between the national government and the States, or on the distribution of power and responsibilities among the various levels of government.

For the reasons discussed above, I certify that this AD:

1. Is not a ''significant regulatory action'' under Executive Order 12866;

2. Is not a ''significant rule'' under the DOT Regulatory Policies and Procedures (44 FR 11034, February 26, 1979);

3. Will not affect intrastate aviation in Alaska; and

4. Will not have a significant economic impact, positive or negative, on a substantial number of small entities under the criteria of the Regulatory Flexibility Act.

We prepared a regulatory evaluation of the estimated costs to comply with this AD and placed it in the AD docket.

Examining the AD Docket

You may examine the AD docket on the Internet at *http://www.regulations.gov;* or in person at the Docket Operations office between 9 a.m. and 5 p.m., Monday through Friday, except Federal holidays. The AD docket contains the NPRM (77 FR 65146, October 25, 2012), the regulatory evaluation, any comments received, and other information. The street address for the Docket Operations office (telephone (800) 647–5527) is in the **ADDRESSES** section. Comments will be available in the AD docket shortly after receipt.

List of Subjects in 14 CFR Part 39

Air transportation, Aircraft, Aviation safety, Incorporation by reference, Safety.

Adoption of the Amendment

Accordingly, under the authority delegated to me by the Administrator, the FAA amends 14 CFR part 39 as follows:

PART 39—AIRWORTHINESS DIRECTIVES

■ 1. The authority citation for part 39 continues to read as follows:

Authority: 49 U.S.C. 106(g), 40113, 44701.

§ 39.13 [Amended]

■ 2. The FAA amends § 39.13 by adding the following new AD:

2013–03–06 Airbus: Amendment 39–17341. Docket No. FAA–2012–1106; Directorate Identifier 2012–NM–084–AD.

(a) Effective Date

This airworthiness directive (AD) becomes effective April 15, 2013.

(b) Affected ADs

None.

(c) Applicability

This AD applies to Airbus Model A330–223F and –243F airplanes; Model A330–201, –202, –203, –223, –243, –301, –302, –303, –321, –322, –323, –341, –342, and –343 airplanes; and Model A340–211, –212, –213, –311, –312, –313, –541, and –642 airplanes; certificated in any category; all manufacturer serial numbers.

(d) Subject

Air Transport Association (ATA) of America Code 34, Navigation.

(e) Reason

This AD was prompted by a report that erroneous height indication by one radio altimeter with engaged flare and retard mode, in case of go-around, might lead to a temporary loss of airplane longitudinal control. We are issuing this AD to ensure that the flightcrew applies the appropriate operational procedures in the event of an erroneous indication of the radio altimeter, which could result in temporary loss of airplane longitudinal control.

(f) Compliance

You are responsible for having the actions required by this AD performed within the compliance times specified, unless the actions have already been done.

(g) Airplane Flight Manual (AFM) Revision

Within 30 days after the effective date of this AD, revise the applicable section of the Airbus A330/A340 AFM to include the information in Airbus Temporary Revision TR37, Issue 1.0, dated June 15, 2010; or Airbus Temporary Revision TR38, Issue 1.0, dated June 15, 2010; to the Airbus A330/A340 AFM. This may be done by inserting Airbus Temporary Revision TR37, Issue 1.0, dated June 15, 2010; or Airbus Temporary Revision TR38, Issue 1.0, dated June 15, 2010; in the AFM.

Note 1 to paragraph (g) of this AD: When the information in Airbus Temporary Revision TR37, Issue 1.0, dated June 15, 2010; or Airbus Temporary Revision TR38, Issue 1.0, dated June 15, 2010; to the Airbus A330/A340 AFM has been included in the applicable section of the general revisions of the AFM, the general revisions may be inserted into the AFM, provided the relevant information in the general revisions is identical to that in Airbus Temporary Revision TR37, Issue 1.0, dated June 15, 2010; or Airbus Temporary Revision TR38, Issue 1.0, dated June 15, 2010.

(h) Other FAA AD Provisions

The following provisions also apply to this AD:

(1) *Alternative Methods of Compliance (AMOCs):* The Manager, International Branch, ANM–116, FAA, has the authority to approve AMOCs for this AD, if requested using the procedures found in 14 CFR 39.19. In accordance with 14 CFR 39.19, send your request to your principal inspector or local Flight Standards District Office, as appropriate. If sending information directly to the International Branch, send it to ATTN: Vladimir Ulyanov, Aerospace Engineer, International Branch, ANM–116, Transport Airplane Directorate, FAA 1601 Lind Avenue SW., Renton, Washington 98057–3356; telephone (425) 227–1138; fax (425) 227–1149. Information may be emailed to: *9-ANM-116-AMOC-REQUESTS@faa.gov.* Before using any approved AMOC, notify your appropriate principal inspector, or lacking a principal inspector, the manager of the local flight standards district office/certificate holding district office. The AMOC approval letter must specifically reference this AD.

(2) *Airworthy Product:* For any requirement in this AD to obtain corrective actions from a manufacturer or other source, use these actions if they are FAA-approved. Corrective actions are considered FAA-approved if they are approved by the State of Design Authority (or their delegated agent). You are required to assure the product is airworthy before it is returned to service.

(i) Related Information

Refer to MCAI European Aviation Safety Agency Airworthiness Directive 2012–0069, dated April 24, 2012, and the service information specified in paragraphs (i)(1) and (i)(2) of this AD, for related information.

(1) Airbus Temporary Revision TR37, Issue 1.0, dated June 15, 2010, to the Airbus A330/A340 AFM.

(2) Airbus Temporary Revision TR38, Issue 1.0, dated June 15, 2010, to the Airbus A330/A340 AFM.

(j) Material Incorporated by Reference

(1) The Director of the Federal Register approved the incorporation by reference (IBR) of the service information listed in this paragraph under 5 U.S.C. 552(a) and 1 CFR part 51.

(2) You must use this service information as applicable to do the actions required by this AD, unless the AD specifies otherwise.

(i) Airbus Temporary Revision TR37, Issue 1.0, dated June 15, 2010, to the Airbus A330/340 Airplane Flight Manual.

(ii) Airbus Temporary Revision TR38, Issue 1.0, dated June 15, 2010, to the Airbus A330/340 Airplane Flight Manual.

(3) For service information identified in this AD, contact Airbus SAS—Airworthiness Office—EAL, 1 Rond Point Maurice Bellonte, 31707 Blagnac Cedex, France; telephone +33 5 61 93 36 96; fax +33 5 61 93 45 80; email *airworthiness.A330-A340@airbus.com;* Internet *http://www.airbus.com.*

(4) You may review copies of the service information at the FAA, Transport Airplane Directorate, 1601 Lind Avenue SW., Renton, WA. For information on the availability of this material at the FAA, call 425–227–1221.

(5) You may view this service information that is incorporated by reference at the National Archives and Records Administration (NARA). For information on the availability of this material at NARA, call 202–741–6030, or go to: *http://www.archives.gov/federal-register/cfr/ibr-locations.html.*

Issued in Renton, Washington, on January 28, 2013.

Ali Bahrami,

Manager, Transport Airplane Directorate, Aircraft Certification Service.

[FR Doc. 2013–05193 Filed 3–8–13; 8:45 am]

BILLING CODE 4910–13–P

DEPARTMENT OF TRANSPORTATION

Federal Aviation Administration

14 CFR Part 39

[Docket No. FAA–2011–0909; Directorate Identifier 2011–NM–027–AD; Amendment 39–17374; AD 2013–05–02]

RIN 2120–AA64

Airworthiness Directives; The Boeing Company Airplanes

AGENCY: Federal Aviation Administration (FAA), DOT.

ACTION: Final rule.

SUMMARY: We are adopting a new airworthiness directive (AD) for all The Boeing Company Model DC–9–81 (MD–81), DC–9–82 (MD–82), DC–9–83 (MD–83), DC–9–87 (MD–87), and MD–88 airplanes. This AD was prompted by reports of cracks of the hinge bearing lugs of the center section ribs of the horizontal stabilizer. This AD requires repetitive high frequency eddy current (HFEC) inspections for cracking of the left and right rib hinge bearing lugs of the aft face of the center section of the horizontal stabilizer; measuring crack length and blending out cracks; and replacing the horizontal stabilizer center section rib, if necessary. We are issuing this AD to detect and correct cracking in the hinge bearing lugs of the horizontal stabilizer center section ribs, which could result in failure of the lugs, and consequent inability of the horizontal stabilizer to sustain the required limit loads and loss of control of the airplane.

DATES: This AD is effective April 15, 2013.

The Director of the Federal Register approved the incorporation by reference of a certain publication listed in the AD as of April 15, 2013.

ADDRESSES: For service information identified in this AD, contact Boeing Commercial Airplanes, Attention: Data & Services Management, 3855 Lakewood Boulevard, MC D800–0019, Long Beach, CA 90846–0001; telephone 206–544–5000, extension 2; fax 206–766–5683; Internet *https://www.myboeingfleet.com.* You may review copies of the referenced service information at the FAA, Transport Airplane Directorate, 1601 Lind Avenue SW., Renton, Washington. For information on the availability of this material at the FAA, call 425–227–1221.

Examining the AD Docket

You may examine the AD docket on the Internet at *http://www.regulations.gov;* or in person at the Docket Management Facility between 9 a.m. and 5 p.m., Monday through Friday, except Federal holidays. The AD docket contains this AD, the regulatory evaluation, any comments received, and other information. The address for the Docket Office (phone: 800–647–5527) is Document Management Facility, U.S. Department of Transportation, Docket Operations, M–30, West Building Ground Floor, Room W12–140, 1200 New Jersey Avenue SE., Washington, DC 20590.

FOR FURTHER INFORMATION CONTACT: Roger Durbin, Aerospace Engineer, Airframe Branch, ANM–120L, FAA, Los Angeles Aircraft Certification Office (ACO), 3960 Paramount Boulevard, Lakewood, CA 90712–4137; phone: 562–627–5233; fax: 562–627–5210; email: *roger.durbin@faa.gov.*

SUPPLEMENTARY INFORMATION:

Discussion

We issued a supplemental notice of proposed rulemaking (SNPRM) to amend 14 CFR part 39 to include an airworthiness directive (AD) that would apply to the specified products. That SNPRM published in the **Federal Register** on September 11, 2012 (77 FR 55773). The original NPRM (76 FR 53346, August 26, 2011) proposed to require repetitive high frequency eddy current (HFEC) inspections for cracking of the left and right rib hinge bearing lugs of the aft face of the center section of the horizontal stabilizer; measuring crack length and blending out cracks; and replacing the horizontal stabilizer center section rib, if necessary. The SNPRM proposed to specify the corrective actions for airplanes on which cracking is found during the inspections of the blendout required by paragraphs (h)(1) and (j)(1) of the SNPRM.

Comments

We gave the public the opportunity to participate in developing this AD. The following presents the comments received on the proposal (77 FR 55773, September 11, 2012) and the FAA's response to each comment. One representative of Boeing concurred with the contents of the proposed rule.

Request To Revise Paragraphs (h)(1)(ii) and (j)(1)(ii) of SNPRM (77 FR 55773, September 11, 2012)

Another representative of Boeing requested that we revise paragraphs (h)(1)(ii) and (j)(1)(ii) of the SNPRM (77 FR 55773, September 11, 2012). Those paragraphs specify that if any cracking is found during any inspection of the blendout to do a replacement. The commenter requested that we specify either doing a repair or a replacement.

We disagree with the request To revise paragraphs (h)(1)(ii) and (j)(1)(ii) of this AD to allow a repair as an option to the replacement. Providing a repair option would allow a blendout repair for cracking found in a rib with a blendout repair already accomplished. The intent of the AD is to allow only one blendout repair before the rib must be replaced. No change has been made to the AD in this regard.

Request To Permit Rib Replacement Using Structural Repair Manual

American Airlines (American) stated that paragraphs (h)(2) and (j)(2) of the SNPRM (77 FR 55773, September 11, 2012) would require replacing the horizontal stabilizer rib in accordance with a method approved by the FAA. American stated that the rib replacement is not a type design change, and this action should be allowed to be accomplished with approved type design data and the structural repair manual (SRM) without the need for FAA approval.

We partially agree. Although we have determined that rib replacement using the SRM is acceptable, we cannot refer to the SRM without revision levels and dates as a method of compliance because doing so violates Office of the Federal Register regulations for approving materials that are incorporated by reference. We will consider approving a global AMOC allowing rib replacement using the SRM.

Conclusion

We reviewed the relevant data, considered the comments received, and determined that air safety and the public interest require adopting the AD as proposed—except for minor editorial changes. We have determined that these minor changes:

- Are consistent with the intent that was proposed in the SNPRM (77 FR 55773, September 11, 2012) for correcting the unsafe condition; and
- Do not add any additional burden upon the public than was already proposed in the SNPRM (77 FR 55773, September 11, 2012).

Interim Action

We consider this AD interim action since investigation is ongoing and no terminating action has been developed yet. The manufacturer is currently developing a modification that will address the unsafe condition identified in this AD. Once this modification is developed, approved, and available, we may consider additional rulemaking.

Costs of Compliance

We estimate that this AD affects 668 airplanes of U.S. registry.

We estimate the following costs to comply with this AD:

ESTIMATED COSTS

Action	Labor cost	Parts cost	Cost per product	Cost on U.S. operators
Inspection	6 work-hours × $85 per hour = $510 per inspection cycle	$0	$510	$340,680

We have received no definitive data that would enable us to provide labor cost estimates for the on-condition actions (blendout repair(s) or replacement of center section rib(s)) specified in this AD. However, we have been advised that replacement parts would be $14,500 per horizontal stabilizer rib crack repair kit.

Authority for This Rulemaking

Title 49 of the United States Code specifies the FAA's authority to issue rules on aviation safety. Subtitle I, section 106, describes the authority of the FAA Administrator. Subtitle VII: Aviation Programs, describes in more detail the scope of the Agency's authority.

We are issuing this rulemaking under the authority described in Subtitle VII, Part A, Subpart III, Section 44701: ''General requirements.'' Under that section, Congress charges the FAA with promoting safe flight of civil aircraft in air commerce by prescribing regulations for practices, methods, and procedures the Administrator finds necessary for safety in air commerce. This regulation is within the scope of that authority because it addresses an unsafe condition that is likely to exist or develop on products identified in this rulemaking action.

Regulatory Findings

This AD will not have federalism implications under Executive Order 13132. This AD will not have a substantial direct effect on the States, on the relationship between the national government and the States, or on the distribution of power and responsibilities among the various levels of government.

For the reasons discussed above, I certify that this AD:

(1) Is not a ''significant regulatory action'' under Executive Order 12866,

(2) Is not a ''significant rule'' under DOT Regulatory Policies and Procedures (44 FR 11034, February 26, 1979),

(3) Will not affect intrastate aviation in Alaska, and

(4) Will not have a significant economic impact, positive or negative, on a substantial number of small entities under the criteria of the Regulatory Flexibility Act.

List of Subjects in 14 CFR Part 39

Air transportation, Aircraft, Aviation safety, Incorporation by reference, Safety.

Adoption of the Amendment

Accordingly, under the authority delegated to me by the Administrator, the FAA amends 14 CFR part 39 as follows:

PART 39—AIRWORTHINESS DIRECTIVES

■ 1. The authority citation for part 39 continues to read as follows:

Authority: 49 U.S.C. 106(g), 40113, 44701.

§ 39.13 [Amended]

■ 2. The FAA amends § 39.13 by adding the following new airworthiness directive (AD):

2013–05–02 The Boeing Company: Amendment 39–17374; Docket No. FAA–2011–0909; Directorate Identifier 2011–NM–027–AD.

(a) Effective Date

This AD is effective April 15, 2013.

(b) Affected ADs

None.

(c) Applicability

This AD applies to The Boeing Company Model DC–9–81 (MD–81), DC–9–82 (MD–82), DC–9–83 (MD–83), DC–9–87 (MD–87), and MD–88 airplanes, certificated in any category, as identified in Boeing Alert Service Bulletin MD80–55A069, dated January 19, 2011.

(d) Subject

Air Transport Association (ATA) of America Code 55, Stabilizers.

(e) Unsafe Condition

This AD was prompted by reports of cracks of the hinge bearing lugs of the center section ribs of the horizontal stabilizer. We are issuing this AD to detect and correct cracking in the hinge bearing lugs of the horizontal stabilizer center section ribs, which could result in failure of the lugs, resulting in the inability of the horizontal stabilizer to sustain the required limit loads and consequent loss of control of the airplane.

(f) Compliance

Comply with this AD within the compliance times specified, unless already done.

(g) Inspection of Horizontal Stabilizer Ribs Made From 7075–T7351 Material

For Group 1 airplanes, as identified in Boeing Alert Service Bulletin MD80–55A069, dated January 19, 2011: Before the accumulation of 23,000 total flight cycles, or within 4,383 flight cycles after the effective date of this AD, whichever occurs later, do a high frequency eddy current (HFEC) inspection for cracking of the left and right rib hinge bearing lugs of the aft face of the center section of the horizontal stabilizer, in accordance with the Accomplishment Instructions of Boeing Alert Service Bulletin MD80–55A069, dated January 19, 2011. For any crack-free lug, repeat the inspection thereafter at intervals not to exceed 8,200 flight cycles.

(h) Repair and Replacement for Cracking of 7075–T7351 Material

If, during any inspection required by paragraph (g) of this AD, any crack is found: Before further flight, measure the length of the crack between the points specified in Boeing Alert Service Bulletin MD80–55A069, dated January 19, 2011. Do the action in accordance with the Accomplishment Instructions of Boeing Alert Service Bulletin MD80–55A069, dated January 19, 2011.

(1) If the crack length between points 'A' and 'B' is less than or equal to 0.15 inch and the crack length between points 'C' and 'D' is less than or equal to 0.05 inch: Before further flight, blend out the crack, in accordance with the Accomplishment Instructions of Boeing Alert Service Bulletin MD80–55A069, dated January 19, 2011. Within 15,600 flight cycles after doing the blendout, do an HFEC inspection of the blendout on the center section rib hinge bearing lug for cracking, in accordance with the Accomplishment Instructions of Boeing Alert Service Bulletin MD80–55A069, dated January 19, 2011.

(i) If no cracking is found, repeat the inspection thereafter at intervals not to exceed 3,900 flight cycles.

(ii) If cracking is found during any inspection of the blendout, before further flight, do the replacement required by paragraph (h)(2) of this AD, and do the inspections required by paragraph (h)(2) of this AD at the times specified in paragraph (h)(2) of this AD.

(2) If the crack length between points 'A' and 'B' is greater than 0.15 inch or the crack length between points 'C' and 'D' is greater

than 0.05 inch: Before further flight, replace the horizontal stabilizer center section rib with a new horizontal stabilizer center section rib, using a method approved in accordance with the procedures specified in paragraph (l) of this AD. Repeat the inspection required by paragraph (g) of this AD one time before the accumulation of 23,000 total flight cycles on the new horizontal stabilizer center section rib, and thereafter at intervals not to exceed 11,300 flight cycles.

(i) Inspection of Horizontal Stabilizer Ribs Made From 7050–T7451 Material

For Group 2 airplanes, as identified in Boeing Alert Service Bulletin MD80–55A069, dated January 19, 2011: Before the accumulation of 23,000 total flight cycles, or within 4,383 flight cycles after the effective date of this AD, whichever occurs later, do an HFEC inspection for cracking of the left and right rib hinge bearing lugs of the aft face of the center section of the horizontal stabilizer, in accordance with the Accomplishment Instructions of Boeing Alert Service Bulletin MD80–55A069, dated January 19, 2011. For any crack-free lug, repeat the inspection thereafter at intervals not to exceed 11,300 flight cycles.

(j) Repair and Replacement for Cracking of 7050–T7451 Material

If, during any inspection required by paragraph (i) of this AD, any crack is found: Before further flight, measure the length of the crack between the points specified in, and in accordance, with the Accomplishment Instructions of Boeing Alert Service Bulletin MD80–55A069, dated January 19, 2011.

(1) If the crack length between points 'A' and 'B' is less than or equal to 0.15 inch and the crack length between points 'C' and 'D' is less than or equal to 0.05 inch: Before further flight, blendout the crack, in accordance with the Accomplishment Instructions of Boeing Alert Service Bulletin MD80–55A069, dated January 19, 2011. Within 15,600 flight cycles after doing the blendout, do an HFEC inspection of the blendout on the center section rib hinge bearing lug for cracking, in accordance with the Accomplishment Instructions of Boeing Alert Service Bulletin MD80–55A069, dated January 19, 2011.

(i) If no cracking is found, repeat the inspection thereafter at intervals not to exceed 5,800 flight cycles.

(ii) If cracking is found during any inspection of the blendout, before further flight, do the replacement required by paragraph (j)(2) of this AD, and do the inspections required by paragraph (j)(2) of this AD at the times specified in paragraph (j)(2) of this AD.

(2) If the crack length between points 'A' and 'B' is greater than 0.15 inch or the crack length between points 'C' and 'D' is greater than 0.05 inch: Before further flight, replace the horizontal stabilizer center section rib with a new horizontal stabilizer center section rib, using a method approved in accordance with the procedures specified in paragraph (l) of this AD. Repeat the inspection required by paragraph (i) of this AD one time before the accumulation of 23,000 total flight cycles on the new horizontal stabilizer center section rib, and thereafter at intervals not to exceed 11,300 flight cycles.

(k) No Reporting Requirement

Although Boeing Alert Service Bulletin MD80–55A069, dated January 19, 2011, specifies to submit certain information to the manufacturer, this AD does not include that requirement.

(l) Alternative Methods of Compliance (AMOCs)

(1) The Manager, Los Angeles Aircraft Certification Office (ACO), FAA, has the authority to approve AMOCs for this AD, if requested using the procedures found in 14 CFR 39.19. In accordance with 14 CFR 39.19, send your request to your principal inspector or local Flight Standards District Office, as appropriate. If sending information directly to the manager of the ACO, send it to the attention of the person identified in the Related Information section of this AD.

(2) Before using any approved AMOC, notify your appropriate principal inspector, or lacking a principal inspector, the manager of the local flight standards district office/ certificate holding district office.

(3) An AMOC that provides an acceptable level of safety may be used for any repair required by this AD if it is approved by the Boeing Commercial Airplanes Organization Designation Authorization (ODA) that has been authorized by the Manager, Los Angeles ACO, to make those findings. For a repair method to be approved, the repair must meet the certification basis of the airplane and 14 CFR 25.571, Amendment 45, and the approval must specifically refer to this AD.

(m) Related Information

For more information about this AD, contact Roger Durbin, Aerospace Engineer, Airframe Branch, ANM–120L, FAA, Los Angeles Aircraft Certification Office (ACO), 3960 Paramount Boulevard, Lakewood, CA 90712–4137; phone: 562–627–5233; fax: 562–627–5210; email: *roger.durbin@faa.gov.*

(n) Material Incorporated by Reference

(1) The Director of the Federal Register approved the incorporation by reference (IBR) of the service information listed in this paragraph under 5 U.S.C. 552(a) and 1 CFR part 51.

(2) You must use this service information as applicable to do the actions required by this AD, unless the AD specifies otherwise.

(i) Boeing Alert Service Bulletin MD80–55A069, dated January 19, 2011.

(ii) Reserved.

(3) For service information identified in this AD, contact Boeing Commercial Airplanes, Attention: Data & Services Management, 3855 Lakewood Boulevard, MC D800–0019, Long Beach, California 90846–0001; telephone 206–544–5000, extension 2; fax 206–766–5683; Internet *https://www.myboeingfleet.com.*

(4) You may view this service information at FAA, Transport Airplane Directorate, 1601 Lind Avenue SW., Renton, Washington. For information on the availability of this material at the FAA, call 425–227–1221.

(5) You may view this service information that is incorporated by reference at the National Archives and Records Administration (NARA). For information on the availability of this material at NARA, call 202–741–6030, or go to: *http://www.archives.gov/federal-register/cfr/ibr-locations.html.*

Issued in Renton, Washington, on February 22, 2013.

Jeffrey E. Duven,

Acting Manager, Transport Airplane Directorate, Aircraft Certification Service.

[FR Doc. 2013–05196 Filed 3–8–13; 8:45 am]

BILLING CODE 4910–13–P

DEPARTMENT OF LABOR

Veterans' Employment and Training Service

20 CFR Part 1001

RIN 1293–AA18

Uniform National Threshold Entered Employment Rate for Veterans

AGENCY: Veterans' Employment and Training Service, Labor.

ACTION: Final rule.

SUMMARY: The purpose of this Final Rule is to establish the uniform national threshold entered employment rate (UNTEER) for veterans, as required of the Secretary in 38 U.S.C. 4102A(c)(3)(B), for use in evaluating States' performance in assisting veterans to meet their employment needs. The Final Rule also explains how the threshold will be used in the process of identifying those States to be reviewed by comparing the actual entered employment rate (EER) achieved for veterans with the threshold EER, and it identifies certain factors, in addition to the threshold, that will be included in the Department's review to determine whether an EER below the threshold reflects a deficiency in the State's performance, or is attributable to other factors beyond the State's control. Finally, in those cases in which a State's EER is determined to reflect a deficiency in a State's performance, this Final Rule identifies the procedure for the submission and review of a corrective action plan (CAP), the delivery of technical assistance (TA), and the initiation of the necessary steps to implement corrective actions to improve the State's performance in assisting veterans to meet their employment needs.

DATES: *Effective Date:* The Final Rule will become effective on May 10, 2013.

FOR FURTHER INFORMATION CONTACT: Ruth Samardick, Director, Office of

National Programs, Veterans' Employment and Training Service, U.S. Department of Labor, 200 Constitution Avenue NW., Room S–1325, Washington, DC 20210, *Samardick.Ruth.M@dol.gov*, (202) 693–4700 (this is not a toll-free number) or (202) 693–4760 (TTY/TDD).

SUPPLEMENTARY INFORMATION: This preamble contains three sections. Section I provides general background information on the development of the Final Rule. Section II discusses the comments received on the Notice of Proposed Rulemaking (NPRM) and the related regulatory provisions included in the Final Rule. Section III addresses the administrative requirements for the Final Rule, as mandated by statute and executive order.

I. Background

On February 18, 2011, the Department published a Notice of Proposed Rulemaking (NPRM, 76 FR 9517) proposing a Rule to implement a uniform national threshold entered employment rate for veterans applicable to State employment service delivery systems. We undertook this Rulemaking in accordance with 38 U.S.C. 4102A(c)(3)(B) (as enacted by the Jobs for Veterans Act) which requires the Department to establish that threshold rate by regulation. All comments received during the comment period were posted on *www.regulations.gov.*

The Jobs for Veterans Act (JVA), Public Law 107–288, was signed into law November 7, 2002. Section 4(a)(1) of the JVA amended 38 U.S.C. 4102A to require that the Secretary of Labor ''establish, and update as appropriate, a comprehensive performance accountability system (as described in subsection (f)) and carry out annual performance reviews of veterans employment, training, and placement services provided through employment service delivery systems, including through Disabled Veterans' Outreach Program specialists and through Local Veterans' Employment Representatives in States receiving grants, contracts, or awards under this chapter.'' 38 U.S.C. 4102A(b)(7).

Section 4102A(f) requires the establishment of performance standards and outcome measures to measure the performance of State employment service delivery systems.

Section 4101(7) of the statute defines ''employment service delivery system'' to include ''labor exchange services * * * offered in accordance with the Wagner-Peyser Act.'' We interpret this definition to include the services delivered through the Wagner-Peyser State Grants, funded by the Employment and Training Administration (ETA), as well as the services delivered through the Jobs for Veterans State Grants (JVSG), funded by the Veterans' Employment and Training Service (VETS). In addition, we interpret this definition to exclude the services funded through the Workforce Investment Act of 1998 (WIA) (Pub. L. 105–220).

Under section 4102A(f), the standards and measures used to assess performance of veterans' programs must be consistent with State performance measures applicable under section 136(b) of the WIA. 38 U.S.C. 4102A(f)(2)(A); see also WIA section 136(b) (codified at 29 U.S.C. 2871(b)). The basic standards and measures applied by the Department to measure performance under WIA are referred to in the State employment service delivery systems as ''common measures.'' The current methods of calculating the common measures are specified in Training and Employment Guidance Letter (TEGL) No.17–05, issued on February 17, 2006. This TEGL can be accessed at *http://wdr.doleta.gov/directives/attach/TEGL17-05.pdf.* The common measures for adult workforce programs include a measure of the rate at which enrollees of State employment service delivery systems enter employment. This is referred to as the ''entered employment rate'' or EER. Under the common measures, there is a comparable EER specifically applicable to veterans and eligible persons. Application of that measure to all State employment service delivery systems is implemented each year through issuance of a Veterans' Program Letter (VPL), most recently VPL 03–11, issued on June 14, 2011, which established the reporting and performance measurement requirements for PY 2011. This VPL can be accessed at: *http://www.dol.gov/vets/VPLS/VPLDirectory.html.*

In the NPRM it was explained that this regulation establishes a uniform national threshold only for the EER for veterans and eligible persons. If we revise the calculation of the standards and measures applied by the Department to measure performance under WIA or under a successor program to WIA through issuance of policy guidance, the Final Rule provides that the revised method of calculating the EER for veterans and eligible persons will be used in calculating the uniform national threshold EER. The method of calculating the uniform national threshold EER for veterans and eligible persons will be specified to State employment service delivery systems in the annual VPL, as mentioned above, and in a companion annual Training and Employment Guidance Letter issued by ETA, such as TEGL No.29–10, ''Negotiating Performance Goals for the Workforce Investment Act Title 1B Programs and Wagner-Peyser Act Funded Activities for Program Year (PY) 2011'' issued on June 1, 2011.

As explained in the NPRM, in developing this regulation we also anticipated that there would be changes to the existing State workforce agency performance reporting system to accommodate reporting on the definition of ''veteran'' that applies to the priority of service provisions of the JVA. The priority of service definition includes any person who served in the military and was discharged under conditions other than dishonorable. Section 1001.162 of this Final Rule outlines how this definition will be phased into operation.

For § 1001.162 in this Rule, we adopted the language proposed in the NPRM. The language explains that for purposes of this Rule, the definition of ''veteran'' will be implemented in two stages. Under § 1001.162(a), starting with the first Program Year that begins after May 10, 2013, we will implement this Rule using the definition of ''veteran'' that is consistent with the definition of ''eligible veteran'' that applies to VETS' services provided under 38 U.S.C. chapter 41. An ''eligible veteran'' is defined as a person who served on active duty in the military for a period of more than 180 days and was discharged under conditions other than dishonorable. (The definition also includes some other smaller group of veterans, for example, those who were released from active duty because of a service-connected disability.) Because of the requirement of more than 180 days of service, the NPRM referred to this definition as the ''more restrictive'' definition of ''veteran.''

Then, as stated in § 1001.162(b), we will begin to use the less restrictive priority of service definition of ''veteran'' starting two Program Years after States are required to begin collecting data under the Priority of Service regulations. DOL will require States to begin collecting this data in PY 2012. Therefore, we will begin using the less restrictive definition of ''veteran'' for purposes of this Rule beginning PY 2014.

As explained in the NPRM, even when we begin using the less restrictive definition of ''veteran'' when implementing this Rule, States will be required to continue collecting data under the more restrictive definition in addition to collecting data under the

Priority of Service regulations. This is because the Secretary is required by 38 U.S.C. 4107(c) to report annually to the Senate and House Veterans' Affairs Committees on the employment and training services provided under 38 U.S.C. chapter 41, which are the services provided to ''eligible veterans'' as defined by the more restrictive definition.

Section 4102A(c)(3) of Title 38 states that ''(A)(i) As a condition of a grant or contract under this section for a program year, in the case of a State that the Secretary determines has an entered employment rate for veterans that is deficient for the preceding program year, the State shall develop a Corrective Action Plan (CAP) to improve that rate for veterans in the State. (ii) The State shall submit the Corrective Action Plan to the Secretary for approval, and if approved, shall expeditiously implement the plan. (iii) If the Secretary does not approve a Corrective Action Plan submitted by the State under clause (i), the Secretary shall take such steps as may be necessary to implement corrective actions in the State to improve the entered employment rate for veterans in that State. (B) To carry out subparagraph (A), the Secretary shall establish in regulations a uniform national threshold entered employment rate for veterans for a program year by which determinations of deficiency may be made under subparagraph (A). (C) In making a determination with respect to a deficiency under subparagraph (A), the Secretary shall take into account the applicable annual unemployment data for the State and consider other factors, such as prevailing economic conditions, that affect performance of individuals providing employment, training, and placement services in the State.''

Section 1001.164 of this Final Rule states that the uniform national threshold EER for a program year is equal to 90 percent of the national EER for veterans and eligible persons, which is defined in 20 CFR 1001.163(c).

In the process of establishing the uniform national threshold EER, before the issuance of the NPRM, we considered a variety of methodologies and used actual EER results from Program Years 2005 through 2009 in order to test the validity of the methodologies. Our goal was to establish a uniform national threshold that would meet five criteria: the threshold should produce reasonable results under varying economic conditions; the threshold should relate directly to the national EER because the national EER is the overall program performance measure related to entered employment rates; the threshold should identify State agencies whose EERs are demonstrably low; the threshold methodology should be easily explained and readily grasped; and the annual threshold-setting process should not conflict with or introduce confusion into the annual performance goal-setting process conducted between VETS and each State agency.

We first tried methodologies that essentially compared a State's current year veterans' EER results with prior years' results, using straightforward comparisons in one method and comparisons to prior year averages in another. Those methods involved relatively complex calculations, and empirical tests with State performance data from Program Years 2008 and 2009 demonstrated that those methodologies did not produce reasonable results under the conditions created by the economic recession experienced during that period.

We then looked at simpler designs for calculating and applying the uniform national threshold EER. One methodology used the national EER for the program year before the subject program year as the basis for calculating the threshold EER. The process would have involved simply setting the threshold at a particular percentage of the national EER from the prior year and comparing the State agencies' actual achievements in the subject program year to that threshold percentage. However, testing at several different percentage levels indicated that using the prior year's national EER as the basis for a threshold also produces unreasonable results in years when there are relatively unusual declines or upturns in economic conditions.

We then tested and selected a similar one-step methodology using the national EER for the subject program year as the basis for calculating the threshold EER. We chose to propose a 90 percent (of the national EER) level as the threshold for identifying each year those State agencies to be subject to a review triggered by the UNTEER because testing of that threshold level most completely satisfies the five criteria stated above. Testing of higher and lower threshold levels (e.g., 80 to 95 percent of the national EER) produced results that in one or more ways failed to satisfy those five criteria stated above. Setting the threshold at the 80 or 85 percent (of the national EER) levels apparently would exempt virtually all of the subject State agencies from the review, year in and year out, despite their relatively low performance levels. That clearly is not an outcome compatible with the legislative intent. At the 95 percent level, more State agencies would be in the cohort subject to the review. But at that level, moreso than at the 90 percent level, it also is more likely that the number of State agencies whose statistical under-performance was attributable primarily to economic factors in the subject program year, and thus not subject to corrective action planning, would be increased.

II. Discussion of the Comments and Regulatory Provisions

Summary of Comments

We received eight comments on the NPRM by the close of the comment period. All comments were carefully reviewed. Of the eight comments, seven were from organizations with an interest in veterans' employment services. Of the seven comments from organizations, six were from State Workforce Agencies, and one was from a State veterans' commission that is the Jobs for Veterans State grantee in that state. One of the eight comments was submitted by an individual in his personal capacity; that person also submitted a comment as an employee of a State Workforce Agency.

Discussion of Comments

1. Three comments raised objections to the fact that the proposed uniform national threshold entered employment rate (UNTEER) would not include the performance data of all Workforce Investment Act-funded programs for veterans and other eligible persons. They said that WIA program services, especially WIA-funded training programs, are integral to the workforce services provided to veterans in the States. The comments maintained that by excluding WIA performance data, the threshold will not accurately reflect a State's performance in serving veterans through its workforce system. Furthermore, one of the comments stated that the exclusion of WIA would cause the threshold to be less effective in improving a State's services to veterans. Another comment stated that in excluding WIA programs from the UNTEER, VETS would miss the opportunity to improve WIA program performance for veterans. Two of the comments also stated that not applying the threshold measure as a performance standard to the overall performance of the workforce services programs in a State would undermine the priority for veterans and other covered persons that is supposed to be given by all DOL-funded employment and training programs.

Response: As was proposed in the NPRM, the UNTEER in the Final Rule

does not include WIA-funded services. Section 4102A(f)(1) of 38 U.S.C. requires that VETS establish performance standards to carry out performance reviews of veterans services provided though State employment service delivery systems, including services provided through JVSG staff. Section 4101 defines ''employment service delivery system'' to mean ''a service delivery system at which or through which labor exchange services * * * are offered in accordance with the Wagner-Peyser Act.'' We have interpreted this definition to exclude WIA-funded services. Section 4102A(f)(2) states that these performance standards must be consistent with other performance standards and outcome measures related to services to veterans that are commonly applied to State Workforce agencies. The Department's common measures of State agency performance on behalf of veterans (including annual entered employment rates for each State) apply to the outcomes of services provided by the veterans' specialists funded by Jobs for Veterans State Grants and the State agency staff who are supported by grants authorized by the Wagner-Peyser Act. Therefore it is appropriate that the UNTEER be calculated from a database that covers the performance of the JVSG and Wagner-Peyser grant-supported staff only.

Regarding the comments that questioned this Rule's effect on States' implementation of the priority of service requirements of 38 U.S.C. 4215, we believe that these comments have raised the broader issue of the need for performance standards for all DOL-funded programs subject to the priority of service for covered persons requirement. That issue is separate from the establishment of the uniform national threshold entered employment rate that is relevant exclusively to measuring the effectiveness of the services of State agencies that are recipients of Wagner-Peyser State Grants, and/or Jobs for Veterans State Grants. Furthermore, the Department currently is working to implement the requirement in Public Law 112–56, enacted in November 2011, to establish appropriate performance measures related to the priority of service advantage for veterans and other covered persons.

2. One commenter pointed out that because the proposed UNTEER can only be calculated at the end of a performance period, the number would not be known during the annual goal-setting negotiations that take place between VETS and the State JVSG recipients. The commenter stated that therefore the annual goal-setting process will be undermined, because the States would not know the appropriate performance target to set.

Response: We acknowledge the circumstances cited by the commenter, but do not believe that the annual goal-setting negotiations will be undermined by the existence of the UNTEER as it was proposed. The UNTEER is not intended to be a performance target; rather, it is a floor-level benchmark, meant to be used in the annual process of assessing the results of the services that were provided during the program year. We believe that States and the two DOL agencies involved, VETS and ETA, will continue to be able to use historical data, including the national EER and individual State EER data, to formulate and negotiate reasonable annual performance targets in the future. Furthermore, because the UNTEER is derived from the aggregate performance of all of the State employment service agencies, DOL expects it to be relatively consistent from year to year.

3. Two commenters said that VETS needs to clarify how the proposed UNTEER would correlate to other annual negotiated performance measures and numerical targets and the processes for putting those annual targets in place.

Response: We agree that VETS and ETA will need to provide some clarifying guidance to the States about how the UNTEER does or does not affect the annual goal-setting processes for the entered employment rate common measures required of all JVSG and Wagner-Peyser grantees. This guidance will be disseminated via administrative directives (such as Veterans Program Letters by VETS and Training and Employment Guidance Letters by ETA) and published by those agencies each year.

4. Two commenters stated that due to the data reporting system's lag time, under the NPRM, there would be no less than a two-year hiatus between the performance year after which a State may be required to have a Corrective Action Plan (CAP) and the completion of the CAP itself, and that the lack of immediacy of the CAP remedy could be problematic. One of those commenters suggested that any State found deficient and subject to a CAP should therefore be exempt from the annual review for EER deficiency during the hiatus, until the CAP is completed. The other commenter questioned how the two-year time lag would impact the annual performance negotiations if a State was under a CAP.

Response: We have not made any changes to the Rule in response to these comments. While there will be lag time between the program year that gives rise to a CAP and the completion of the CAP, we believe that any challenges inherent in the proposed cycle of reviews, CAP development and imposition, and later determinations of the success of subject agencies in resolving their deficiencies can and will be overcome by good faith efforts of the grantor agencies and the State agencies in behalf of veterans. The review that follows a determination that a State failed to meet the UNTEER essentially will focus on whether or not the statistical performance was due to internal policy or operational flaws that may be correctable, or instead was due to economic and other external variables beyond a State's control. In the latter case, no CAP would be called for. The Department's view is that every situation that requires a Corrective Action Plan is unique, and therefore every CAP will be unique. Although unique in content, each CAP would include a diagnosis section that outlines the unique, specific State agency internal policy and/or operational flaws that existed in the subject performance year, and a plan section that outlines the specific corrective actions, with timetables, to remedy those flaws. It is likely that some corrective actions in each CAP may take place during the period while the CAP is being developed, or at various times during the period while the approved CAP is in place, and thus the lag time between diagnosis and remedy would be reduced from the two-year time frame cited by the commenter for discrete parts of the corrective actions.

As for the proposed exemption from the annual reviews to determine whether or not a CAP should be required, we do not intend to exempt any State from the reviews. However, should a State agency that is already under a CAP fail again to attain the UNTEER our review will take into consideration the relevant facts including progress toward the goals in the CAP, and we will react appropriately. Later actions could include continuation of all portions of the original CAP, or modification of the existing CAP, or creation of an entirely new CAP. Each case would be unique.

5. One commenter proposed that the first year of application of the proposed UNTEER and subsequent deficiency reviews be a ''hold harmless'' year, in which the results would be computed but no remedial action would be required of any State agency, in order to establish a baseline for the UNTEER.

Response: We see no need for a ''hold harmless'' period. The databases in

which the individual States' entered employment rates reside and from which the UNTEER is calculated are mature, and the data sets are considered valid and reliable. In formulating the proposed UNTEER, we used these databases to predict the results of applying the UNTEER measure and found that applying the UNTEER as proposed will not lead to any extreme results. While it is true that the incorporation of the new definition of veteran into the system will have some impact on the veterans data, the change is expected to have only a minor impact, not significant enough to de-stabilize or invalidate the databases.

6. Another commenter stated that the NPRM's allowance of a two-year delay for developing a data system to capture data on the less restrictive definition of ''veteran'' (as it is defined for purposes of priority of service) will likely cause confusion for program staff since certain veterans will count as veterans for one purpose (preference in job referrals), but not for the Federal entered employment performance measure until two years from now.

Response: We have made no changes to the Final Rule in response to this comment. We realize that at the service delivery level, there may be some program linkage problems due to the fact that Federal laws do not provide a uniform definition of the persons who are considered to be ''veterans'' for all employment and training related programs. Even when the less restrictive definition of ''veteran'' begins to apply for purposes of this Rule and for the Priority of Service requirements, States must continue to also collect data using the more restrictive definition of ''eligible veteran'' to fulfill the reporting requirements under 38 U.S.C. chapter 41. That issue can only be resolved by legislative changes. The reason for the two year time frame for the changeover to using the data collected under the new definition is to ensure that those data are accurate and reliable before applying them in the annual review process.

7. Two commenters addressed the status of the ETA/VETS data collection and data reporting systems, both encouraging ETA and VETS to collaborate to make changes necessary to incorporate the new definition of veteran into the data collection and reporting systems. One of the two commenters also asked if the Department would provide funding support to the States for the changes that have to be made.

Response: VETS and ETA are collaborating on the data systems changes. States will be able to use Federal grant funds to pay for their costs of implementing the data systems changes.

8. One commenter stated that the potential impact of the proposed UNTEER would be greater on States with larger veteran populations. To mitigate this disparate impact, the commenter proposed that the numbers of certain categories of hard-to-serve veterans (e.g., incarcerated and homeless veterans) not be included in the entered employment rate calculations that will be done following implementation of the UNTEER and related deficiency review processes outlined in this Rule.

Response: We reject removal of any category of veterans or covered persons from the EER calculations performed under this Rule. There is no support in VETS' governing statutes for such exclusion, and no precedent for doing so. The Final Rule retains the single UNTEER to be applicable to evaluating the performance of States' provision of services to all veterans and covered persons in the State. However, we will evaluate State-specific factors during a review for deficiency under § 1001.166(b)(1) of this Rule.

9. One commenter proposed that the threshold be lowered from the proposed 90 percent of the national EER to 80 percent of the national EER, in order ''to standardize reporting'' with the Wagner-Peyser and WIA programs.

Response: The Uniform National Threshold Entered Employment Rate is not intended to be viewed or used as the annual ''goal'' or ''target'' entered employment rate for any individual State. The UNTEER does not serve the same purpose as the ETA and the VETS agencies' EER goal-setting processes conducted annually with the State agencies, so there is no reason to make the percentages equal. We expect that State agencies in the future will continue to participate with VETS and ETA in negotiating performance goals based primarily on each State agency's history of performance and economic forecasts for the target year(s), and additionally, for veterans, the assumption that delivering priority of service will result in better outcomes for veterans.

10. Three commenters disagreed with the proposal to use the national EER for veterans as a benchmark embedded into the UNTEER formula, and suggested instead to use some methodology that would be more specific to the circumstances of each State, such as comparing performance to aggregated data derived from certain groupings (e.g., by size or by other attributes) of State agencies rather than to the national EER. The comments state that any process for determining whether or not a State agency's performance is deficient needs to take into consideration the specific circumstances of state and local economies and customers' needs.

Response: We agree that we must take into consideration pertinent information regarding unique circumstances related to any State agency's performance before making a determination that the State agency is deficient and must take corrective action on behalf of veterans. However, we disagree that the method of calculating the UNTEER must attempt to incorporate the multitude of factors that make each State agency unique. There are far too many unique factors among the State agencies affected by this regulation to quantify and integrate into a viable threshold formula. The Final Rule takes into account the unique factors related to a State agency's performance during the review process that will take place for every State that fails to attain the simple uniform national threshold, as described at § 1001.166(b).

We formulated and tested many methodologies for the UNTEER that attempted to create a UNTEER along the lines suggested by these commenters. All were found to be seriously flawed in some way or another. For example, one commenter proposed revising the threshold calculation and subsequent deficiency determination process by dividing the States into three groups, Small, Medium, and Large (decided by the number of veteran participants in the State), then calculating at the end of each program year the EER collectively achieved by each of those three groups of State agencies. The resultant three group EERs would serve as the ''uniform national EER for veterans'' to identify the agencies within each group that would be reviewed.

However, we determined that the concept of lumping States together by that criterion, or by any other single criterion or group of criteria (e.g., geographic size, geographic region, number of independent Workforce Investment Boards, etc) and then creating several aggregate numerical benchmarks to serve as the threshold is as subject to criticism about the comparability or non-comparability of the subject agencies as is the more simple national UNTEER that is being adopted in this Final Rule. Also, 38 U.S.C. 4102A(c)(3)(B) calls for a uniform national threshold, so a methodology that effectively creates multiple different numerical thresholds in any given year is problematic in that respect.

We tested other methods of calculating unique ''threshold'' EERs for each State agency, including comparisons of year-to-year performance. One method divided the State agencies into two groups based on comparing each State's EER to the national EER. The method then compared the State agencies' year-to-year performance, further dividing State agencies into two groups based on comparing the State's subject year performance to the average of the State's previous three years' EERs. Another method compared each agency's performance percentage of change from the previous year to the national percentage of change from the previous year. However, there are serious flaws in each of those relatively complicated methodologies. The empirical results of testing of each formula with the available, complete State agency data, i.e., from program years 2005 through 2009, showed that those formulae failed to produce reasonable results during periods of sharp economic change such as was experienced in 2008 and 2009.

We have chosen to implement 38 U.S.C. 4102A(c)(3)(B) by establishing a floor-level EER for veterans below which a State agency's performance will be subject to a Departmental review to determine whether that State should be required to take corrective action to improve its operations on behalf of veterans. We believe that a simple UNTEER methodology directly related to the aggregate national workforce services delivery system's actual achievement level is a reasonable and understandable measure that satisfies the legislation's requirement for a single measure intended to identify State agencies potentially in need of corrective action on behalf of veterans.

We also favor the relatively simple to understand UNTEER in this Final Rule because its simplicity lowers the potential for confusion and conflict with the annual program goal-setting processes carried on by both VETS and ETA with the States.

11. The same commenter who recommended creating the three group threshold approach discussed above also recommended changing the Final Rule to attach JVSG funding triggers to the results of the comparisons of the States' EERs to the threshold EER. The commenter proposed that any State agency that failed to attain the threshold number would automatically lose 1–3 percent of its JVSG funding, and those States that exceeded the number would automatically gain an additional 1–3 percent of JVSG funding. The commenter argued that this Rule should not only focus on corrective action for under-performing State agencies, it should also provide tangible recognition and rewards for higher performing State agencies.

Response: We think that this suggestion goes far beyond what the JVA law intended or authorizes. Section 4102A(c)(3) requires that after a determination that takes into consideration internal and external factors that affect performance, State agencies found to be deficient for the preceding program year must engage in corrective action in order to receive the next-due JVS grant. The statute does not require or authorize the Department to adjust grant funding levels simply on the basis of attainment or non-attainment of the threshold number.

12. Two commenters said that more explanation needs to be given regarding the reviews that would be done by VETS following a finding that a State agency's EER is deficient in relation to the UNTEER. One asked specifically if there is, or will be, a model for analyzing the economic data during the review to determine whether or not a Corrective Action Plan is required. One asked if the impact of the new, broader definition of veteran will be considered. One asked if distinctions would be made between the EER for veterans and the disabled veterans' EER, and how VETS would consider veterans who require intensive services. One also asked if additional reporting burdens will be imposed by the review process.

Response: We agree that we should provide to the State agencies more information regarding the review content and process, but not in federal regulations. We think that the details of the review process and content is best left to VETS, the DOL agency that will make the final determination, after consultation with ETA, whether or not a CAP should be imposed. Administrative details will be provided through the issuance of program guidance letters. The Rule gives wide latitude for any State that is subject to the review to provide information about its policies, operations, and performance level, but does not prescribe any additional reporting requirements.

Changes From the NPRM

For this Final Rule, we have mainly adopted the text as proposed in the NPRM. We made minor editorial changes to the text of section 1001.160, and the regulatory text now uses the acronym UNTEER to reference the Uniform National Threshold EER. We also made minor additions to the text of section 1001.166 to acknowledge that we will consult with ETA during the evaluation described in that section. Because section 1001.166 involves evaluating a State's employment service delivery system, which includes the Wagner-Peyser program that is administered by ETA, it is appropriate that VETS consider ETA's input during the review process.

III. Administrative Information

Regulatory Flexibility Analysis, Executive Order 13272, and Small Business Regulatory Enforcement Fairness Act

The Regulatory Flexibility Act (RFA), 5 U.S.C. Chapter 6, requires the Department to evaluate the economic impact of this Rule with regard to small entities. The RFA defines small entities to include small businesses, small organizations including not-for-profit organizations, and small governmental jurisdictions. We have determined, and have certified to the Chief Counsel for Advocacy, Small Business Administration, that this Rule does not impose a significant economic impact on a substantial number of such small entities, because this Rule would directly impact only States and the definition of small entities does not include States.

Executive Orders 12866 and 13563

Executive Orders (E.O.) 13563 and 12866 direct agencies to assess all costs and benefits of a rule and, if regulation is necessary, to select regulatory approaches that maximize net benefits (including potential economic, environmental, public health and safety effects, distributive impacts, and equity).

Executive Order 12866 requires that for each regulatory action we propose, we must conduct an assessment of the proposed regulatory action to determine whether the action is ''significant'' before publishing the regulation. A ''significant regulatory action'' is defined to include an action that will have an annual effect on the economy of $100 million or more, and/or an action that raises a novel legal or policy issue. This Rule will not have an annual effect on the economy of $100 million or more, and it does not raise novel legal or policy issues. Therefore, the Office of Management and Budget has designated this Final Rule as ''not significant'' under E.O. 12866.

E.O. 13563, issued after publication of the NPRM, directs agencies to identify, to the extent possible, the necessity of the regulation as well as the costs and benefits of the regulation.

Through the Jobs for Veterans State Grants program, VETS provides funding

to States to support Disabled Veterans Outreach Program specialists and Local Veterans Employment Representatives in each State. These individuals provide employment services to veterans and eligible military spouses. Under 38 U.S.C. 4102A(c)(3)(A)(i), for a State to receive JVSG funding for a program year, if VETS determines that the State's entered-employment rate (EER) for veterans is deficient for the preceding program year, the State must develop a corrective action plan (CAP) to improve the EER for veterans in the State. Section 4102A(c)(3)(B) of title 38 requires VETS to ''establish in regulations a uniform national threshold entered-employment rate for veterans for a program year by which [these] determinations of deficiency may be made.'' This Final Rule establishes a uniform national threshold, and explains how VETS will use the uniform national threshold in its review of States to determine whether an EER below the threshold reflects a deficiency in the State's performance. The Rule also explains the procedure for the submission and review of a CAP. This regulation is necessary for VETS to fulfill its statutory obligations to establish the uniform national threshold and to conduct reviews for deficiency under the JVSG program.

The costs of this Rule are minimal. VETS will calculate the uniform national threshold and will determine how a State's EER for veterans compares to the threshold using the data that VETS already routinely collects from States as part of the JVSG program. The Rule does not impose any new data collection requirements. If a State is determined deficient and required to submit a CAP, VETS estimates that the costs specifically attributable to submitting and implementing the CAP would be about one percent of the State's annual JVS grant amount. If a State's JVSG funding is not adequate to cover the cost of developing and implementing a CAP, additional funds will be provided through VETS' routine reallocation procedure, which requires no additional appropriation and thus would have no net cost.

The benefits of this Rule far outweigh its minimal costs. By fulfilling VETS' statutory obligations to establish the uniform national threshold and conduct reviews for deficiency, the Rule will add another measure of accountability to the JVSG program. This will help ensure that veterans and eligible spouses are provided a maximum of employment and training opportunities, consistent with the purpose of VETS as stated in 38 U.S.C. 4102. Furthermore, this Rule provides States the necessary guidance on the procedure that VETS will follow when reviewing the States for deficiency, and the procedure that States must follow in submitting and implementing a CAP. The Rule also outlines how VETS will provide technical assistance to States that must develop and implement a CAP. These procedures will have the benefit of facilitating and improving States' employment services to veterans and eligible spouses under the JVSG program.

Paperwork Reduction Act

The purposes of the Paperwork Reduction Act of 1995 (PRA), 44 U.S.C. 3501 et seq., include minimizing the paperwork burden on affected entities. The PRA requires certain actions before an agency can adopt or revise the collection of information, including publishing a summary of the collection of information and a brief description of the need for and proposed use of the information. This Rule will not require new or additional information collections, as defined in the Act, from the affected entities. We have determined that a State's obligation to develop and submit a CAP for approval does not qualify as a collection of information, as defined by 5 CFR 1320.3(c), because after receiving a determination of deficiency from VETS that excludes the systemic factors beyond the State's control, the State is required to develop and submit a CAP based on a self-diagnosis and prescription that addresses the unique set of deficiencies embodied in that State's policies and procedures. Therefore, a CAP does not qualify as a ''collection of information'' under 5 CFR 1320.3(c), because it does not result from identical questions nor is the content across multiple CAPs in any way identical. In addition, a CAP does not qualify as ''information'' under 5 CFR 1320.3(h) because the individuality of the information provided in each State's CAP is consistent with a response to a ''request for facts or opinions addressed to a single person,'' which is excluded under 5 CFR 1320.3(h)(6).

Current reporting systems and requirements are not changed by this Rule. Therefore, this Rule does not impose on the State employment service delivery systems any new information collection that would require approval under the PRA.

Executive Order 13132

The Department reviewed this Rule in accordance with Executive Order 13132 regarding federalism and determined that it does not have ''federalism implications.'' This Rule does not ''have substantial direct effects on the States, on the relationship between the national government and the States, or on the distribution of power and responsibilities among the various levels of government.'' This Rule implements the uniform national threshold EER for veterans and eligible persons applicable to State employment service delivery systems. This Rule does nothing to alter either the relationship between the national government and the States, or the distribution of power and responsibilities among the various levels of government. Accordingly, this Rule does not have ''federalism implications.''

Unfunded Mandates Reform Act of 1995

For purposes of the Unfunded Mandates Reform Act (UMRA) of 1995, this Rule does not include any Federal mandate that may result in increased expenditures by State, local and Tribal governments, or by the private sector. As this Rule does not impose any unfunded Federal mandate, the UMRA is not implicated. As explained above, current reporting requirements on the States are not changed by this Rule. The Labor Exchange Reporting System (LERS) produces program year EER results for 52 of the 54 reporting employment service delivery systems and calculates the first step toward a national EER, based on inclusion of those 52 reporting units. For each program year, VETS will supplement the results available from the LERS by: (a) Incorporating the program year EER results for the two States that are piloting a separate reporting system; and, (b) calculating the uniform national threshold EER based on inclusion of the results for all 54 reporting units. Therefore, this Rule does not impose any new reporting or calculation requirement upon the State employment service delivery systems. Some States may be required to institute corrective action plans under this Rule. However, such CAPs are required by statute. Moreover, the Department provides grant funds for the administration of the JVSG program which may be used for any costs associated with the imposition of a CAP.

Executive Order 13045

Executive Order 13045 concerns the protection of children from environmental health risks and safety risks. This Rule implements the uniform national threshold EER for veterans and eligible persons applicable to State employment service delivery systems funded by the Department. This Rule

has no impact on safety or health risks to children.

Executive Order 13175

Executive Order 13175 addresses the unique relationship between the Federal Government and Indian Tribal governments. The order requires Federal agencies to take certain actions when regulations have ''Tribal implications.'' The order defines regulations as having ''Tribal implications'' when they have substantial direct effects on one or more Indian Tribes, on the relationship between the Federal Government and Indian Tribes, or on the distribution of power and responsibilities between the Federal Government and Indian Tribes. We have reviewed this Rule and concluded that it does not have Tribal implications for purposes of Executive Order 13175, as it does nothing to affect either the relationship or the distribution of power and responsibilities between the Federal Government and Indian Tribes.

Environmental Impact Assessment

We have reviewed this Rule in accordance with the requirements of the National Environmental Policy Act (NEPA) of 1969 (42 U.S.C. 4321 et seq.), the regulations of the Council on Environmental Quality (40 CFR part 1500), and the Department's NEPA procedures (29 CFR part 11). The Rule will not have a significant impact on the quality of the human environment, and thus we have not prepared an environmental assessment or an environmental impact statement.

Assessment of Federal Regulations and Policies on Families

Section 654 of the Treasury and General Government Appropriations Act, enacted as part of the Omnibus Consolidated and Emergency Supplemental Appropriations Act of 1999 (Pub. L. 105–277, 112 Stat. 2681), requires the Department to assess the impact of this Rule on family well-being. A Rule that is determined to have a negative effect on families must be supported with an adequate rationale. We have assessed this Rule and determined that it will not have a negative effect on families.

Privacy Act

The Privacy Act of 1974 (5 U.S.C. 552a) provides safeguards to individuals for their personal information which the Government collects. The Act requires certain actions by an agency that collects information on individuals when that information contains personally identifying information such as Social Security Numbers or names. Because this Rule does not require a new collection of personally identifiable information, the Privacy Act does not apply in this instance.

Executive Order 12630

This Rule is not subject to Executive Order 12630, Governmental Actions and Interference with Constitutionally Protected Property Rights, because it does not involve implementation of a policy with takings implications.

Executive Order 12988

This Rule has been drafted and reviewed in accordance with Executive Order 12988, Civil Justice Reform, and it will not unduly burden the Federal court system. The Final Rule has been written so as to minimize litigation and provide a clear legal standard for affected conduct, and has been reviewed carefully to eliminate drafting errors and ambiguities.

Executive Order 13211

This Rule is not subject to Executive Order 13211, because it will not have a significant adverse effect on the supply, distribution, or use of energy.

Plain Language

We drafted this Rule in plain language.

Catalog of Federal Domestic Assistance Number

State employment service delivery systems consist of three formula grant programs, operating within an integrated service delivery infrastructure. Each of these three programs has been assigned a Catalog of Federal Domestic Assistance (CFDA) Number. The three programs are the Employment Service/Wagner-Peyser Funded Activities (CFDA 17.207), the Disabled Veterans' Outreach Program (CFDA 17.801), and the Local Veterans' Employment Representative Program (CFDA 17.804).

List of Subjects in 20 CFR Part 1001

Employment, Grant programs—Labor, Veterans.

For reasons stated in the preamble, 20 CFR Chapter IX is amended as follows:

PART 1001—SERVICES FOR VETERANS

■ 1. The authority citation for part 1001 continues to read as follows:

Authority: 29 U.S.C. 49k; 38 U.S.C. chapters 41 and 42.

■ 2. Add subpart G, consisting of §§ 1001.160 through 1001.167, to read as follows:

Subpart G—Purpose and Definitions

Sec.
1001.160 What is the purpose and scope of this part?
1001.161 What definitions apply to this part?
1001.162 How does the Department define veteran for purposes of this subpart?
1001.163 What is the national entered employment rate (EER) and what is a State's program year EER for purposes of this part?
1001.164 What is the uniform national threshold EER, and how will it be calculated?
1001.165 When will the uniform national threshold EER be published?
1001.166 How will the uniform national threshold EER be used to evaluate whether a State will be required to submit a Corrective Action Plan (CAP)?
1001.167 In addition to the procedures specified in this part, will the Department be conducting any other monitoring of compliance regarding services to veterans?

Subpart G—Purpose and Definitions

§ 1001.160 What is the purpose and scope of this part?

(a) The purpose of this part is to fulfill the requirement of 38 U.S.C. 4102A(c)(3)(B) to establish a uniform national threshold entered employment rate (UNTEER) achieved for veterans and eligible persons by the State employment service delivery systems. We will use the UNTEER as part of the review process for determining whether a State's program year EER is deficient and a Corrective Action Plan (CAP) is required of that State employment service delivery system.

(b) This part is applicable to all State agencies that are recipients of Wagner-Peyser State Grants, and/or Jobs for Veterans State Grants.

§ 1001.161 What definitions apply to this part?

Department means the United States Department of Labor, including its agencies and organizational units and their representatives.

Eligible person, as defined at 38 U.S.C. 4101(5), means:

(1) The spouse of any person who died of a service-connected disability;

(2) The spouse of any member of the Armed Forces serving on active duty who, at the time of application for assistance under this chapter, is listed, pursuant to 37 U.S.C. 556 and regulations issued thereunder by the Secretary concerned, in one or more of the following categories and has been so listed for a total of more than ninety days:

(i) Missing in action,

(ii) Captured in line of duty by a hostile force, or

(iii) Forcibly detained or interned in line of duty by a foreign government or power; or

(3) The spouse of any person who has a total disability permanent in nature resulting from a service-connected disability or the spouse of a veteran who died while a disability so evaluated was in existence.

Employment service delivery system, as defined at 38 U.S.C. 4101(7), means a service delivery system at which or through which labor exchange services, including employment, training, and placement services, are offered in accordance with the Wagner-Peyser Act.

Jobs for Veterans Act (JVA) means Public Law 107–288, 116 Stat. 2033 (2002), codified at 38 U.S.C. chapters 41 and 42.

Jobs for Veterans State Grant (JVSG) means an award of Federal financial assistance by the Department to a State for the purposes of the Disabled Veterans' Outreach Program or the Local Veterans' Employment Representative Program.

Program year is the period from July 1 of a year through June 30 of the following year and is numbered according to the calendar year in which it begins.

§ 1001.162 How does the Department define veteran for purposes of this subpart?

The Department applies two definitions of veteran for the purposes of this subpart and has established two stages for the implementation of these definitions.

(a) The first stage of implementation begins with application of this subpart G to the first program year following May 10, 2013. As of that date, veteran is defined as it is in 38 U.S.C. 4211(4), as a person who:

(1) Served on active duty for a period of more than 180 days and was discharged or released therefrom with other than a dishonorable discharge;

(2) Was discharged or released from active duty because of a service-connected disability;

(3) As a member of a reserve component under an order to active duty pursuant to 10 U.S.C. 12301(a), (d), or (g), 12302, or 12304, served on active duty during a period of war or in a campaign or expedition for which a campaign badge is authorized and was discharged or released from such duty with other than a dishonorable discharge; or

(4) Was discharged or released from active duty by reason of a sole survivorship discharge (as that term is defined in 10 U.S.C.1174(i)).

(b) The second stage of implementation begins with the first day of the program year that begins two years after the first day of the program year that State grantees begin collecting and maintaining data as required by 20 CFR 1010.330(c). As of that date, veteran will be defined as it is in 20 CFR 1010.110:

(1) A person who served in the active military, naval, or air service, and who was discharged or released there from under conditions other than dishonorable, as specified in 38 U.S.C. 101(2).

(2) Active service includes full-time Federal service in the National Guard or a Reserve component, other than full-time duty for training purposes.

(c) During the second stage of implementation, any veteran who meets the definition specified in paragraph (a) of this section will be considered to meet the definition specified in paragraph (b) of this section.

(d) We will notify State grantees when they are required to begin implementing 20 CFR 1010.330(c).

§ 1001.163 What is the national entered employment rate (EER) and what is a State's program year EER for purposes of this part?

(a) For purposes of this part, we use the EER for veterans and eligible persons. This is the EER as applied to veterans (as defined in § 1001.162) and eligible persons (as defined in § 1001.161) who are participants in State employment service delivery systems.

(b) The EER for veterans and eligible persons measures the number of the participants described in paragraph (a) of this section who are employed after exiting an employment service delivery system compared to the total number of those participants who exited. We will issue policy guidance to establish the method of calculating the EER.

(c) The national EER for veterans and eligible persons is the EER achieved by the national State employment service delivery system for those veterans and eligible persons who are participants in all of the State employment service delivery systems for the program year under review. The national EER resulting from this calculation is expressed as a percentage that is rounded to the nearest tenth of a percent.

(d) A State's program year EER is the EER for veterans and eligible persons (as calculated in paragraph (b) of this section) achieved by a single State's employment service delivery system for those veterans and eligible persons who are included in the EER measure for that State's employment service delivery system for the program year under review. The program year EER resulting from this calculation is expressed as a percentage that is rounded to the nearest tenth of a percent.

§ 1001.164 What is the uniform national threshold EER, and how will it be calculated?

(a) The uniform national threshold EER for a program year is equal to 90 percent of the national EER for veterans and eligible persons (as defined in § 1001.163(c)).

(b) The uniform national threshold EER resulting from this calculation is expressed as a percentage that is rounded to the nearest tenth of a percent.

§ 1001.165 When will the uniform national threshold EER be published?

When practicable, the Veterans' Employment and Training Service (VETS) will publish the uniform national threshold EER for a given program year by the end of December of the calendar year in which that program year ends.

§ 1001.166 How will the uniform national threshold EER be used to evaluate whether a State will be required to submit a Corrective Action Plan (CAP)?

(a) *Comparison.* Each State's program year EER will be compared to the uniform national threshold EER for that program year. State agencies that do not achieve a program year EER that equals or exceeds the uniform national threshold EER (90 percent of the national EER) for the year under review will be subject to a review by VETS, with input from the Employment and Training Administration (ETA), to determine whether the program year EER is deficient.

(b) *Review.* For each State whose program year EER is subject to review to determine deficiency, the review will consider the degree of difference between the State's program year EER and the uniform national threshold EER for that program year, as well as the annual unemployment data for the State as compiled by the Bureau of Labor Statistics.

(1) The review also may consider other relevant measures of prevailing economic conditions and regional economic conditions, as well as other measures of the performance of workforce programs and/or any information the State may submit.

(2) The review will include consultation with VETS and ETA field staff about findings from their on-site reviews and desk audits of State agency implementation of policies and procedures for services to veterans and also may include consultation with staff

affiliated with other agencies of the Department, as appropriate.

(c) *Requirement of a CAP.* After review, a State whose program year EER is determined not to be deficient will be notified that a CAP will not be required; a State whose program year EER is determined to be deficient will be required to submit a CAP to improve the State's performance in assisting veterans to meet their employment needs as a condition of receiving its next-due JVSG.

(1) Any State whose program year EER has been determined to be deficient will be notified by March 31 of the year following the calendar year in which the program year under review ended.

(2) For any State that is required to submit a CAP, VETS will provide technical assistance (TA), with input from ETA, on the development of the CAP. The CAP must be submitted to the Grant Officer's Technical Representative by June 30 of the year following the calendar year in which the program year under review ended.

(3) We will review the CAP submitted by the State and determine, with input from ETA, whether to approve it or to provide additional TA to the State.

(i) If we approve the CAP, the State must expeditiously implement it.

(ii) If we do not approve the CAP, we will take such steps as are necessary to implement corrective actions to improve the State's EER for veterans and eligible persons.

(4) If a State fails to take the actions we impose under paragraph (c)(3)(ii) of this section, the Assistant Secretary for Veterans' Employment and Training may take any actions available to remedy non-compliance under 20 CFR 1001.130(a) (referring to the compliance measures discussed in 20 CFR part 658, subpart H).

§ 1001.167 In addition to the procedures specified in this part, will the Department be conducting any other monitoring of compliance regarding services to veterans?

Yes. We will continue to monitor compliance with the regulations on veterans' priority of service at 20 CFR 1010.240(b) jointly with the ETA. If a State's program year EER is determined to be deficient for a given program year, that deficiency would constitute information to be considered in monitoring priority of service, since failure to fully implement priority of service could be one of the contributors to a deficient program year EER.

Keith Kelly,

Assistant Secretary, Veterans' Employment and Training.

[FR Doc. 2013–05345 Filed 3–8–13; 8:45 am]

BILLING CODE 4510–79–P

DEPARTMENT OF HOMELAND SECURITY

Coast Guard

33 CFR Part 117

[Docket No. USCG–2013–0120]

Drawbridge Operation Regulations; Upper Mississippi River, Rock Island, IL

AGENCY: Coast Guard, DHS.

ACTION: Notice of deviation from regulation.

SUMMARY: The Coast Guard has issued a temporary deviation from the operating schedule that governs the Rock Island Railroad and Highway Drawbridge, across the Upper Mississippi River, mile 482.9, at Rock Island, Illinois. The deviation is necessary to allow the River Bandits 5K Run/Walk to cross the bridge. This deviation allows the bridge to be maintained in the closed-to-navigation position.

DATES: This deviation is effective on April 6, 2013, from 8 a.m. until 9:30 a.m.

ADDRESSES: The docket for this deviation, [USCG–2013–0120] is available at *http://www.regulations.gov.* Type the docket number in the ''SEARCH'' box and click ''SEARCH.'' Click on Open Docket Folder on the line associated with this deviation. You may also visit the Docket Management Facility in Room W12–140 on the ground floor of the Department of Transportation West Building, 1200 New Jersey Avenue SE., Washington, DC 20590, between 9 a.m. and 5 p.m., Monday through Friday, except Federal holidays.

FOR FURTHER INFORMATION CONTACT: If you have questions on this temporary deviation, call or email Eric A. Washburn, Bridge Administrator, Western Rivers, Coast Guard; telephone (314) 269–2378, email *Eric.Washburn@uscg.mil.* If you have questions on viewing the docket, call Barbara Hairston, Program Manager, Docket Operations, telephone (202) 366–9826.

SUPPLEMENTARY INFORMATION: The U.S. Army Rock Island Arsenal requested a temporary deviation for the Rock Island Railroad and Highway Drawbridge, across the Upper Mississippi River, mile 482.9, at Rock Island, Illinois to remain in the closed-to-navigation position for a one and a half hour period from 8 a.m. to 9:30 a.m., April 6, 2013, while a run/walk is held between the cities of Davenport, IA and Rock Island, IL. The Rock Island Railroad and Highway Drawbridge currently operates in accordance with 33 CFR 117.5, which states the general requirement that drawbridges shall open promptly and fully for the passage of vessels when a request to open is given in accordance with the subpart.

There are no alternate routes for vessels transiting this section of the Upper Mississippi River.

The Rock Island Railroad and Highway Drawbridge, in the closed-to-navigation position, provides a vertical clearance of 23.8 feet above normal pool. Navigation on the waterway consists primarily of commercial tows and recreational watercraft. This temporary deviation has been coordinated with waterway users. No objections were received.

In accordance with 33 CFR 117.35(e), the drawbridge must return to its regular operating schedule immediately at the end of the effective period of this deviation. This deviation from the operating regulations is authorized under 33 CFR 117.35.

Dated: February 26, 2013.

Eric A. Washburn,

Bridge Administrator, Western Rivers.

[FR Doc. 2013–05547 Filed 3–8–13; 8:45 am]

BILLING CODE 9110–04–P

DEPARTMENT OF HOMELAND SECURITY

Coast Guard

33 CFR Part 117

[Docket No. USCG–2013–0053]

Drawbridge Operation Regulations; West Bay, Osterville, MA

AGENCY: Coast Guard, DHS.

ACTION: Notice of temporary deviation from regulation.

SUMMARY: The Coast Guard has issued a temporary deviation from the regulation governing the operation of the West Bay Bridge across West Bay, mile 1.2, Osterville, Massachusetts. Under this temporary deviation, the bridge may remain in the closed position three months to facilitate scheduled bridge repairs.

DATES: This deviation is effective from March 11, 2013, through April 30, 2013. This deviation has been enforced with actual notice since February 26, 2013.

ADDRESSES: The docket for this deviation, [USCG–2013–0053] is available at *http://www.regulations.gov.* Type the docket number in the ''SEARCH'' box and click ''SEARCH.'' Click on Open Docket Folder on the line

associated with this deviation. You may also visit the Docket Management Facility in Room W12–140, on the ground floor of the Department of Transportation West Building, 1200 New Jersey Avenue SE., Washington, DC 20590, between 9 a.m. and 5 p.m., Monday through Friday, except Federal holidays.

FOR FURTHER INFORMATION CONTACT: If you have questions on this temporary deviation, call or email Mr. John McDonald, Project Officer, First Coast Guard District, *john.w.mcdonald@uscg.mil,* or (617) 223–8364. If you have questions on viewing the docket, call Barbara Hairston, Program Manager, Docket Operations, telephone 202–366–9826.

SUPPLEMENTARY INFORMATION: The West Bay Bridge has a vertical clearance of 15 feet at mean high water, and 17 feet at mean low water in the closed position. The existing drawbridge operating regulations are found at 33 CFR 117.622.

The bridge owner, the Town of Barnstable, requested a bridge closure to facilitate bridge rehabilitation repairs.

Under this temporary deviation, the West Bay Bridge may remain in the closed position from February 22, 2013 through April 30, 2013.

The West Bay Bridge is transited predominantly by recreational vessels. The bridge rarely opens in the winter months when this temporary deviation will be in effect; however, there is an alternate route around Grand Isle for marine traffic.

In accordance with 33 CFR 117.35(e), the bridge must return to its regular operating schedule immediately at the end of the designated repair period. This deviation from the operating regulations is authorized under 33 CFR 117.35.

Dated: February 26, 2013.

Gary Kassof,

Bridge Program Manager, First Coast Guard District.

[FR Doc. 2013–05548 Filed 3–8–13; 8:45 am]

BILLING CODE 9110–04–P

DEPARTMENT OF HOMELAND SECURITY

Coast Guard

33 CFR Part 117

[Docket No. USCG–2013–0122]

Drawbridge Operation Regulations; Columbia River, Vancouver, WA

AGENCY: Coast Guard, DHS.

ACTION: Notice of deviation from drawbridge regulation.

SUMMARY: The Coast Guard has issued a temporary deviation from the operating schedule that governs the Burlington Northern Santa Fe (BNSF) Railway Bridge across the Columbia River, mile 105.6, at Vancouver, WA. This deviation is necessary to accommodate maintenance to replace movable bridge joints. This deviation allows the bridge to remain in the closed position during maintenance activities.

DATES: This deviation is effective from 8 a.m. on March 13, 2013, until 6 p.m. on March 14, 2013.

ADDRESSES: The docket for this deviation, [USCG–2013–0122] is available at *http://www.regulations.gov.* Type the docket number in the ''SEARCH'' box and click ''SEARCH.'' Click on Open Docket Folder on the line associated with this deviation. You may also visit the Docket Management Facility in Room W12–140 on the ground floor of the Department of Transportation West Building, 1200 New Jersey Avenue SE., Washington, DC 20590, between 9 a.m. and 5 p.m., Monday through Friday, except Federal holidays.

FOR FURTHER INFORMATION CONTACT: If you have questions on this temporary deviation, call or email Randall Overton, Bridge Administrator, Coast Guard Thirteenth District; telephone 206–220–7282, email *Randall.D.Overton@uscg.mil.* If you have questions on viewing the docket, call Barbara Hairston, Program Manager, Docket Operations, telephone 202–366–9826.

SUPPLEMENTARY INFORMATION: BNSF has requested that the BNSF Swing Bridge across the Columbia River, mile 105.6, remain closed to vessel traffic to facilitate replacement of movable bridge joints. During these maintenance periods the swing span of the BNSF Railway Bridge across the Columbia River at Vancouver, WA will be disabled and the bridge will not be able to be opened. The BNSF Bridge crosses the Columbia River, mile 105.6, and in accordance to NOAA Chart 18526 provides 39 feet of vertical clearance above Columbia River Datum 0.0 while in the closed position. Vessels which do not require a bridge opening may continue to transit beneath the bridge during this closure period. Under normal operation the bridge opens on signal as required by 33 CFR 117.5. This deviation allows the swing span of the BNSF Railway Bridge across the Columbia River, mile 105.6, to remain in the closed position and not open for maritime traffic from 8 a.m. until 6 p.m. on March 13, 2013, and 8 a.m. until 6 p.m. on March 14, 2013. The bridge shall operate in accordance to 33 CFR 117.5 at all other times. Waterway usage on this stretch of the Columbia River includes vessels ranging from commercial tug and tow vessels to recreational pleasure craft including cabin cruisers and sailing vessels. Mariners will be notified and kept informed of the bridge's operational status via the Coast Guard Notice to Mariners publication and Broadcast Notice to Mariners as appropriate.

In accordance with 33 CFR 117.35(e), the drawbridge must return to its regular operating schedule immediately at the end of the effective period of this temporary deviation. This deviation from the operating regulations is authorized under 33 CFR 117.35.

Dated: February 27, 2013.

Randall D. Overton,

Bridge Administrator.

[FR Doc. 2013–05545 Filed 3–8–13; 8:45 am]

BILLING CODE 9110–04–P

DEPARTMENT OF HOMELAND SECURITY

Coast Guard

33 CFR Part 165

[Docket No. USCG–2013–0116]

RIN 1625–AA00

Safety Zone; St. Patrick's Day Fireworks; Manitowoc River, Manitowoc, WI

AGENCY: Coast Guard, DHS.

ACTION: Temporary final rule.

SUMMARY: The Coast Guard is establishing a temporary safety zone on the Manitowoc River in Manitowoc, Wisconsin. This safety zone is intended to restrict vessels from a portion of the Manitowoc River due to a fireworks display. This temporary safety zone is necessary to protect the surrounding public and vessels from the hazards associated with the fireworks display.

DATES: This rule is effective on March 15, 2013, from 5:30 p.m. until 7:00 p.m.

ADDRESSES: Documents indicated in this preamble as being available in the docket are part of docket USCG–2013–0116 and are available online by going to *www.regulations.gov,* inserting USCG–2013–0116 in the ''Keyword'' box, and then clicking ''search.'' They are also available for inspection or copying at the Docket Management Facility (M–30), U.S. Department of Transportation, West Building Ground floor, Room W12–140, 1200 New Jersey Avenue SE., Washington DC 20590,

between 9 a.m. and 5 p.m., Monday through Friday, except Federal holidays.

FOR FURTHER INFORMATION CONTACT: If you have questions on this temporary rule, contact or email MST1 Joseph McCollum, U.S. Coast Guard Sector Lake Michigan, at 414–747–7148 or *Joseph.P.McCollum@uscg.mil.* If you have questions on viewing the docket, call Barbara Hairston, Program Manager, Docket Operations, telephone 202–366–9826.

SUPPLEMENTARY INFORMATION:

Table of Acronyms

DHS Department of Homeland Security
FR Federal Register
NPRM Notice of Proposed Rulemaking

A. Regulatory History and Information

The Coast Guard is issuing this temporary final rule without prior notice and opportunity to comment pursuant to authority under section 4(a) of the Administrative Procedure Act (APA) (5 U.S.C. 553(b)). This provision authorizes an agency to issue a rule without prior notice and opportunity to comment when the agency for good cause finds that those procedures are ''impracticable, unnecessary, or contrary to the public interest.'' Under 5 U.S.C. 553(b)(B), the Coast Guard finds that good cause exists for not publishing a notice of proposed rulemaking (NPRM) with respect to this rule because doing so would be impracticable. The final details for this event were not known to the Coast Guard until there was insufficient time remaining before the event to publish an NPRM. Thus, delaying the effective date of this rule to wait for a comment period to run would be impracticable because it would inhibit the Coast Guard's ability to protect vessels from the hazards associated with a fireworks display that are discussed further below.

Under 5 U.S.C. 553(d)(3), the Coast Guard finds that good cause exists for making this rule effective less than 30 days after publication in the **Federal Register**. For the same reasons discussed in the preceding paragraph, waiting for a 30 day notice period to run would be impracticable and contrary to the public interest.

B. Basis and Purpose

The legal basis for the rule is the Coast Guard's authority to establish regulated navigation areas and limited access areas: 33 U.S.C. 1226, 1231; 46 U.S.C. Chapter 701, 3306, 3703; 50 U.S.C. 191, 195; 33 CFR 1.05–1, 6.04–1, 6.04–6, 160.5; Public Law 107–295, 116 Stat. 2064; Department of Homeland Security Delegation No. 0170.1.

On March 15, 2013, the City of Manitowoc will hold its annual St. Patrick's Day fireworks display. This fireworks display will be launched from the shore of the Manitowoc River. This event is currently listed within 33 CFR 165.929(1) as taking place on the third Saturday of March. However, due to a schedule conflict the event organizers have informed the Coast Guard that this year's event will take place on Friday, March 15. The Captain of the Port, Sector Lake Michigan, has determined that this fireworks display will pose a significant risk to public safety and property. Such hazards include falling debris and collisions among spectator vessels.

C. Discussion of Rule

With the aforementioned hazards in mind, the Captain of the Port, Sector Lake Michigan, has determined that this temporary safety zone is necessary to ensure the safety of persons and vessels during the fireworks display on the shore of the Manitowoc River. This zone is effective from 5:30 p.m. until 7:00 p.m. on March 15, 2013. This zone will be enforced from 5:30 p.m. until 7:00 p.m. on March 15, 2013.

The safety zone will encompass all waters of the Manitowoc River within a 300 foot radius of an approximate launch position at 44°5′29.6″ N and 87°39′23.0″ W (NAD 83).

Entry into, transiting, or anchoring within the safety zone is prohibited unless authorized by the Captain of the Port, Sector Lake Michigan, or his designated on-scene representative. The Captain of the Port or his designated on-scene representative may be contacted via VHF Channel 16.

D. Regulatory Analyses

We developed this rule after considering numerous statutes and executive orders related to rulemaking. Below we summarize our analyses based on these statutes or executive orders.

1. Regulatory Planning and Review

This rule is not a significant regulatory action under section 3(f) of Executive Order 12866, Regulatory Planning and Review, as supplemented by Executive Order 13563, Improving Regulation and Regulatory Review, and does not require an assessment of potential costs and benefits under section 6(a)(3) of Executive Order 12866 or under section 1 of Executive Order 13563. The Office of Management and Budget has not reviewed it under those Orders. It is not ''significant'' under the regulatory policies and procedures of the Department of Homeland Security (DHS). We conclude that this rule is not a significant regulatory action because we anticipate that it will have minimal impact on the economy, will not interfere with other agencies, will not adversely alter the budget of any grant or loan recipients, and will not raise any novel legal or policy issues. The safety zone created by this rule will be geographically small and enforced for only for short time period. Under certain conditions, moreover, vessels may still transit through the safety zone when permitted by the Captain of the Port.

2. Impact on Small Entities

The Regulatory Flexibility Act of 1980 (RFA), 5 U.S.C. 601–612, as amended, requires federal agencies to consider the potential impact of regulations on small entities during rulemaking. The Coast Guard certifies under 5 U.S.C. 605(b) that this rule will not have a significant economic impact on a substantial number of small entities.

This rule will affect the following entities, some of which might be small entities: the owners or operators of vessels intending to transit or anchor in a portion of the Manitowoc River on March 15, 2013.

This safety zone will not have a significant economic impact on a substantial number of small entities for the following reasons: This safety zone would be effective and thus subject to enforcement for only one day. Traffic may be allowed to pass through the zone with the permission of the Captain of the Port. The Captain of the Port can be reached via VHF channel 16. Before the activation of the zone, we will issue local Broadcast Notice to Mariners.

3. Assistance for Small Entities

Under section 213(a) of the Small Business Regulatory Enforcement Fairness Act of 1996 (Pub. L. 104–121), we want to assist small entities in understanding this rule. If the rule would affect your small business, organization, or governmental jurisdiction and you have questions concerning its provisions or options for compliance, please contact the person listed in the **FOR FURTHER INFORMATION CONTACT** section above.

Small businesses may send comments on the actions of Federal employees who enforce, or otherwise determine compliance with, Federal regulations to the Small Business and Agriculture Regulatory Enforcement Ombudsman and the Regional Small Business Regulatory Fairness Boards. The Ombudsman evaluates these actions annually and rates each agency's responsiveness to small business. If you

wish to comment on actions by employees of the Coast Guard, call 1–888–REG–FAIR (1–888–734–3247). The Coast Guard will not retaliate against small entities that question or complain about this rule or any policy or action of the Coast Guard.

4. Collection of Information

This rule will not call for a new collection of information under the Paperwork Reduction Act of 1995 (44 U.S.C. 3501–3520).

5. Federalism

A rule has implications for federalism under Executive Order 13132, Federalism, if it has a substantial direct effect on the States, on the relationship between the national government and the States, or on the distribution of power and responsibilities among the various levels of government. We have analyzed this rule under that Order and determined that this rule does not have implications for federalism.

6. Protest Activities

The Coast Guard respects the First Amendment rights of protesters. In preparing this temporary rule, the Coast Guard carefully considered the rights of lawful protestors. The safety zones created by this rule do not prohibit members of the public from assembling on shore or expressing their points of view from locations on shore. In addition, the Captain of the Port has identified waters in the vicinity of these safety zones where those desiring to do so can assemble and express their views without compromising navigational safety. Protesters are asked to contact the person listed in the **FOR FURTHER INTFORMATION CONTACT** section to coordinate protest activities so that your message can be received without jeopardizing the safety or security of people, places or vessels.

7. Unfunded Mandates Reform Act

The Unfunded Mandates Reform Act of 1995 (2 U.S.C. 1531–1538) requires Federal agencies to assess the effects of their discretionary regulatory actions. In particular, the Act addresses actions that may result in the expenditure by a State, local, or tribal government, in the aggregate, or by the private sector of $100,000,000 (adjusted for inflation) or more in any one year. Though this rule will not result in such an expenditure, we do discuss the effects of this rule elsewhere in this preamble.

8. Taking of Private Property

This rule will not cause a taking of private property or otherwise have taking implications under Executive Order 12630, Governmental Actions and Interference with Constitutionally Protected Property Rights.

9. Civil Justice Reform

This rule meets applicable standards in sections 3(a) and 3(b)(2) of Executive Order 12988, Civil Justice Reform, to minimize litigation, eliminate ambiguity, and reduce burden.

10. Protection of Children

We have analyzed this rule under Executive Order 13045, Protection of Children from Environmental Health Risks and Safety Risks. This rule is not an economically significant rule and does not create an environmental risk to health or risk to safety that may disproportionately affect children.

11. Indian Tribal Governments

This rule does not have tribal implications under Executive Order 13175, Consultation and Coordination with Indian Tribal Governments, because it does not have a substantial direct effect on one or more Indian tribes, on the relationship between the Federal Government and Indian tribes, or on the distribution of power and responsibilities between the Federal Government and Indian tribes.

12. Energy Effects

This action is not a ''significant energy action'' under Executive Order 13211, Actions Concerning Regulations That Significantly Affect Energy Supply, Distribution, or Use.

13. Technical Standards

This rule does not use technical standards. Therefore, we did not consider the use of voluntary consensus standards.

14. Environment

We have analyzed this rule under Department of Homeland Security Management Directive 023–01 and Commandant Instruction M16475.lD, which guide the Coast Guard in complying with the National Environmental Policy Act of 1969 (NEPA) (42 U.S.C. 4321–4370f), and have determined that this action is one of a category of actions that do not individually or cumulatively have a significant effect on the human environment. This rule involves the establishment of a safety zone and, therefore it is categorically excluded from further review under paragraph 34(g) of Figure 2–1 of the Commandant Instruction. An environmental analysis checklist supporting this determination and a Categorical Exclusion Determination are available in the docket where indicated under **ADDRESSES**. We seek any comments or information that may lead to the discovery of a significant environmental impact from this rule.

List of Subjects in 33 CFR Part 165

Harbors, Marine safety, Navigation (water), Reporting and recordkeeping requirements, Security measures, Waterways.

For the reasons discussed in the preamble, the Coast Guard amends 33 CFR part 165 as follows:

PART 165—REGULATED NAVIGATION AREAS AND LIMITED ACCESS AREAS

■ 1. The authority citation for part 165 continues to read as follows:

Authority: 33 U.S.C. 1231; 46 U.S.C. Chapters 701, 3306, 3703; 50 U.S.C. 191, 195; 33 CFR 1.05–1, 6.04–1, 6.04–6, and 160.5; Pub. L. 107–295, 116 Stat. 2064; Department of Homeland Security Delegation No. 0170.1.

■ 2. Add § 165.T09–0116 to read as follows:

§ 165.T09–0116 Safety Zone; St. Patrick's Day Fireworks; Manitowoc River, Manitowoc, Wisconsin.

(a) *Location.* The safety zone will encompass all waters of the Manitowoc River within a 300 foot radius of an approximate launch position at 44° 5′ 29.6″ N and 87° 39′ 23.0″ W (NAD 83).

(b) *Effective and enforcement period.* This rule is effective from 5:30 p.m. until 7:00 p.m. on March 15, 2013. This rule will be enforced from 5:30 p.m. until 7:00 p.m. on March 15, 2013.

(c) *Regulations.*

(1) In accordance with the general regulations in § 165.23 of this part, entry into, transiting, or anchoring within this safety zone is prohibited unless authorized by the Captain of the Port, Sector Lake Michigan or his designated on-scene representative.

(2) This safety zone is closed to all vessel traffic, except as may be permitted by the Captain of the Port, Sector Lake Michigan or his designated on-scene representative.

(3) The ''on-scene representative'' of the Captain of the Port, Sector Lake Michigan is any Coast Guard commissioned, warrant or petty officer who has been designated by the Captain of the Port, Sector Lake Michigan to act on his behalf.

(4) Vessel operators desiring to enter or operate within the safety zone shall contact the Captain of the Port, Sector Lake Michigan or his on-scene representative to obtain permission to do so. The Captain of the Port, Sector Lake Michigan or his on-scene representative may be contacted via

VHF Channel 16. Vessel operators given permission to enter or operate in the safety zone must comply with all directions given to them by the Captain of the Port, Sector Lake Michigan, or his on-scene representative.

Dated: February 26, 2013.

M.W. Sibley,

Captain, U.S. Coast Guard, Captain of the Port, Sector Lake Michigan.

[FR Doc. 2013–05546 Filed 3–8–13; 8:45 am]

BILLING CODE 9110–04–P

ENVIRONMENTAL PROTECTION AGENCY

40 CFR Part 52

[EPA–R06–OAR–2005–NM–0006; FRL–9788–8]

Approval and Promulgation of Implementation Plans; New Mexico; New Source Review (NSR) Preconstruction Permitting Program; Clarification of EPA's Approval of the Sunland Park Section 110(a)(1) Maintenance Plan for the 1997 8-Hour Ozone Standard

AGENCY: Environmental Protection Agency (EPA).

ACTION: Final rule.

SUMMARY: EPA is taking final action to approve revisions to the applicable New Source Review (NSR) State Implementation Plan (SIP) for New Mexico. Among the changes, EPA is approving the following: the establishment of a new Minor NSR (MNSR) general construction permitting program; changes to the MNSR Public Participation requirements; the establishment of three different types of MNSR Permit Revisions; and the addition of exemptions for *de minimis* emission sources and activities from obtaining a MNSR permit. EPA finds that these revisions to the New Mexico SIP comply with the Federal Clean Air Act (the Act or CAA) and EPA regulations and are consistent with EPA policies. EPA also is providing clarification of an earlier separate EPA rulemaking action approving the Section 110(a)(1) Maintenance Plan for the 1997 8-hour ozone standard for the Sunland Park 1997 8-hour attainment area. This action is being taken under section 110 of the Act.

DATES: This final rule is effective on April 10, 2013.

ADDRESSES: EPA has established a docket for this action under Docket ID No. EPA–R06–OAR–2005–NM–0006. All documents in the docket are listed on the *http://www.regulations.gov* Web site. Although listed in the index, some information is not publicly available, e.g., Confidential Business Information or other information whose disclosure is restricted by statute. Certain other material, such as copyrighted material, is not placed on the Internet and will be publicly available only in hard copy form. Publicly available docket materials are available either electronically through *http://www.regulations.gov* or in hard copy at the Air Permits Section (6PD–R), Environmental Protection Agency, 1445 Ross Avenue, Suite 700, Dallas, Texas 75202–2733. The file will be made available by appointment for public inspection in the Region 6 Freedom of Information Act Review Room between the hours of 8:30 a.m. and 4:30 p.m. weekdays except for legal holidays. Contact the person listed in the **FOR FURTHER INFORMATION CONTACT** paragraph below or Mr. Bill Deese at 214–665–7253 to make an appointment. If possible, please make the appointment at least two working days in advance of your visit. There will be a 15 cent per page fee for making photocopies of documents. On the day of the visit, please check in at the EPA Region 6 reception area at 1445 Ross Avenue, Suite 700, Dallas, Texas.

The State submittals related to this SIP revision, and which are part of the EPA docket, are also available for public inspection at the State Air Agency listed below during official business hours by appointment:

New Mexico Environment Department, Air Quality Bureau, 1301 Siler Road, Building B, Santa Fe, New Mexico.

FOR FURTHER INFORMATION CONTACT: Ms. Ashley Mohr, Air Permits Section (6PD–R), Environmental Protection Agency, Region 6, 1445 Ross Avenue, Suite 700, Dallas, Texas 75202–2733, telephone (214) 665–7289; fax number (214) 665–6762; email address *mohr.ashley@epa.gov.*

SUPPLEMENTARY INFORMATION: Throughout this document, ''we,'' ''us,'' and ''our'' means EPA.

Table of Contents

I. What is the background for this action?
II. What public comments were received?
III. What final action is EPA taking?
A. What are we not addressing in this final action?
IV. Statutory and Executive Order Reviews

I. What is the background for this action?

The background for today's action is discussed in detail in our November 29, 2012 proposal (77 FR 71145). In that notice, we proposed to approve revisions to the NSR SIP for New Mexico submitted on May 29, 1998, November 6, 1998, April 11, 2002, April 25, 2005, and November 2, 2006, which incorporate changes to the Construction Permits regulation contained in 20.2.72 of the New Mexico Administrative Code (NMAC), also known as Part 72. Part 72 contains the provisions that establish New Mexico's Minor NSR permitting program as well as preconstruction permitting requirements potentially applicable to other programs under the NMAC. EPA also proposed to approve as part of the New Mexico NSR SIP, the letter dated November 7, 2012, from the Secretary committing the New Mexico Environment Department (NMED) Air Quality Bureau to providing notification on the NMED's Web site of all second 30-day public comment periods provided for under Paragraph B of Section 206 of Part 72.

Our November 29, 2012 proposal provides a detailed description of the submittals and the rationale for EPA's proposed action, together with a discussion of the opportunity to comment. The public comment period for this action closed on December 31, 2012.

II. What public comments were received?

The **Federal Register** proposing approval of these SIP revisions was published on November 29, 2012, and the public comment period closed on December 31, 2012. EPA received one comment letter submitted by the NMED (hereinafter referred to as ''the commenter''). The comment letter is available for review in the docket for this rulemaking. We received no adverse comments on the proposed rule from the commenter. The commenter generally expressed support of EPA's proposed approval of these SIP revisions, and raised two considerations that EPA is clarifying in its responses.

Comment: The commenter raised a concern about EPA's reference in its proposed action incorrectly referring to the Sunland Park, New Mexico area as being designated nonattainment for the revoked 1-hour ozone National Ambient Air Quality Standard (NAAQS). The commenter contends that this area is no longer designated as nonattainment for the 1-hour ozone NAAQS.

Response: EPA agrees the Sunland Park area is no longer designated nonattainment for the 1-hour ozone NAAQS.[1] EPA revoked the 1-hour ozone NAAQS for the Sunland Park area

[1] EPA stated in the proposed action, in part: ''* * *the only area designated nonattainment for the 1-hour ozone NAAQS is Sunland Park.'' 77 FR 71151, November 29, 2012.

effective one year following the effective date of the area's designation as attainment for the 1997 8-hour ozone NAAQS—June 15, 2005.[2] EPA subsequently approved a maintenance plan for the 8-hour standard for the Sunland Park area under section 110(a)(1) of the CAA and 40 CFR 51.905(a)(3)(iii). Therefore, Sunland Park's prior designation under the 1-hour ozone standard is of historical interest only.[3] As NMED points out, EPA has determined that Sunland Park has met all of its obligations under the revoked 1-hour ozone standard. Therefore, the reference to the prior 1-hour ozone designation status of the Sunland Park area in the proposal has no effect on its current obligations.

Comment: The commenter states that New Mexico submitted, and EPA approved, a timely maintenance plan for the new 8-hour ozone standard for the Sunland Park area in accordance with 40 CFR 51.905(a)(3)(iii). The commenter also states that EPA has previously noted in its approval of the maintenance plan, ''[t]here are no outstanding obligations under the 1-hour ozone NAAQS'' for the Sunland Park area. 76 FR 28181 at 28182 (May 16, 2011). The commenter affirms that because the State's SIP-approved permitting rules are self implementing, the Prevention of Significant Deterioration (PSD) permitting requirements became applicable for the Sunland Park area upon revocation of the 1-hour ozone NAAQS.

Response: EPA agrees the SIP's PSD rules are self-implementing and, as a result, the PSD SIP permitting requirements are applicable to the Sunland Park area. As long as New Mexico interprets its SIP as applying PSD to Sunland Park, upon approval of the Sunland Park maintenance plan for the 1997 8-hour ozone NAAQS, the 1-hour ozone Nonattainment NSR (NNSR) permitting requirements for the Sunland Park area were no longer required. New Mexico submitted, and EPA approved, a timely maintenance plan for the 1997 8-hour ozone NAAQS for the Sunland Park area.[4] Consistent with this confirmation, provided in the comment letter from NMED, that the New Mexico SIP's PSD rules are self-implementing and therefore applicable to the Sunland Park area, EPA wishes to clarify its previous approval of the Sunland Park maintenance plan for the 1997 8-hour ozone NAAQS. Our previous approval did not make clear that New Mexico's PSD SIP permitting requirements are applicable to the Sunland Park area, and therefore EPA would not require the continued application of 1-hour ozone NNSR permitting requirements for the area upon approval of the maintenance plan. Consistent with the commenter's affirmation and EPA's confirmation that the New Mexico SIP's PSD rules are self-implementing, EPA clarifies that the PSD SIP permitting requirements have been applicable to the Sunland Park area from the effective date of EPA's approval of the maintenance plan.

III. What final action is EPA taking?

We are approving the SIP revisions to the Construction Permits regulation found in Part 72 that were submitted by New Mexico on May 29, 1998, November 6, 1998, April 11, 2002, April 25, 2005, and November 2, 2006, and the letter from the Secretary dated November 7, 2012. This action is being taken under section 110 of the CAA. Additionally, EPA is clarifying statements made in the proposed action and the approach it took with respect to the 1-hour ozone nonattainment NSR/PSD transition in its approval of the Sunland Park 110(a)(1) maintenance plan.

A. What are we not addressing in this final action?

EPA is only taking final action on the severable revisions to Part 72 contained in the five SIP revision submittals listed above that were submitted to us for review and incorporation into the New Mexico SIP. By severable, we mean that the portions of the SIP revision submittals relating to Part 72 can be implemented independently of the remaining portions of the submittal, without affecting the stringency of the submitted rules. In addition, the remaining portions of the submittal are not necessary for approval of the provisions addressing Part 72. The following is a list of other revisions contained in the November 6, 1998, April 11, 2002, April 25, 2005, and November 2, 2006 submittals that are not being addressed in this final action:

- The November 6, 1998 submittal from New Mexico also contained revisions to correct errors in 20.2.70 NMAC—Operating Permits. Because 20.2.70 NMAC is outside the scope of the New Mexico SIP, the revisions to the Operating Permits provisions were not submitted as revisions to the state's SIP.
- The April 11, 2002 submittal from New Mexico also contained revisions to 20.2.73 NMAC—Notice of Intent and Emissions Inventory Requirements, 20.2.74 NMAC—Permits—Prevention of Significant Deterioration, 20.2.75 NMAC—Construction Permit Fees, and 20.2.79 NMAC—Permits—Nonattainment Areas. Portions of the submittal related to Parts 73, 74, 75, and 79 have been or will be addressed in separate SIP revisions reviews and rule actions, as necessary.
- The April 11, 2002 submittal also included documentation related to an additional revision to 20.2.72 NMAC (filed with the State Records Center on February 28, 2001, effective March 30, 2001), which was submitted to EPA for informational purposes only and was not submitted for approval under the SIP. Therefore, the February 28, 2001 state adopted revisions to Part 72 are not included in this final action.
- The April 25, 2005 submittal from New Mexico also contained revisions to 20.2.66 NMAC—Cotton Gins, 20.2.73 NMAC—Notice of Intent and Emissions Inventory Requirements, and 20.2.75 NMAC—Construction Permit Fees. Portions of the submittal related to Parts 66, 73, and 75 have been or will be addressed in separate SIP revisions reviews and rule actions, as necessary.
- The November 2, 2006 submittal from New Mexico also contained revisions to 20.2.3 NMAC—Ambient Air Quality Standards, 20.2.70 NMAC—Operating Permits, and 20.2.99 NMAC—Conformity to the State Implementation Plan of Transportation Plans, Programs and Projects. Portions of the submittal related to Parts 3, 70, and 99 have been or will be addressed in separate SIP revisions reviews and rule actions, as necessary.

IV. Statutory and Executive Order Reviews

Under the CAA, the Administrator is required to approve a SIP submission that complies with the provisions of the Act and applicable Federal regulations. 42 U.S.C. 7410(k); 40 CFR 52.02(a). Thus, in reviewing SIP submissions, EPA's role is to approve state choices, provided that they meet the criteria of the CAA. Accordingly, this action merely approves state law as meeting Federal requirements and does not impose additional requirements beyond those imposed by state law. For that reason, this action:

- Is not a ''significant regulatory action'' subject to review by the Office of Management and Budget under Executive Order 12866 (58 FR 51735, October 4, 1993);
- Does not impose an information collection burden under the provisions of the Paperwork Reduction Act (44 U.S.C. 3501 *et seq.*);

[2] Codified at 70 FR 44470, April 3, 2005.

[3] The list of past 1-hour ozone designations in 40 CFR part 81 for Sunland Park is a historical reference only.

[4] Approval and Promulgation of Air Quality Implementation Plans; New Mexico; Sunland Park Section 110(A)(1) Maintenance Plan for the 1997 8-hour Ozone Standard, 76 FR 28181, May 16, 2011.

• Is certified as not having a significant economic impact on a substantial number of small entities under the Regulatory Flexibility Act (5 U.S.C. 601 *et seq.*);

• Does not contain any unfunded mandate or significantly or uniquely affect small governments, as described in the Unfunded Mandates Reform Act of 1995 (Pub. L. 104–4);

• Does not have Federalism implications as specified in Executive Order 13132 (64 FR 43255, August 10, 1999);

• Is not an economically significant regulatory action based on health or safety risks subject to Executive Order 13045 (62 FR 19885, April 23, 1997);

• Is not a significant regulatory action subject to Executive Order 13211 (66 FR 28355, May 22, 2001);

• Is not subject to requirements of Section 12(d) of the National Technology Transfer and Advancement Act of 1995 (15 U.S.C. 272 note) because application of those requirements would be inconsistent with the Clean Air Act; and

• Does not provide EPA with the discretionary authority to address, as appropriate, disproportionate human health or environmental effects, using practicable and legally permissible methods, under Executive Order 12898 (59 FR 7629, February 16, 1994).

In addition, this rule does not have tribal implications as specified by Executive Order 13175 (65 FR 67249, November 9, 2000), because the SIP is not approved to apply in Indian country located in the state, and EPA notes that it will not impose substantial direct costs on tribal governments or preempt tribal law.

The Congressional Review Act, 5 U.S.C. 801 *et seq.,* as added by the Small Business Regulatory Enforcement Fairness Act of 1996, generally provides that before a rule may take effect, the agency promulgating the rule must submit a rule report, which includes a copy of the rule, to each House of the Congress and to the Comptroller General of the United States. EPA will submit a report containing this action and other required information to the U.S. Senate, the U.S. House of Representatives, and the Comptroller General of the United States prior to publication of the rule in the **Federal Register**. A major rule cannot take effect until 60 days after it is published in the **Federal Register**. This action is not a ''major rule'' as defined by 5 U.S.C. 804(2).

Under section 307(b)(1) of the CAA, petitions for judicial review of this action must be filed in the United States Court of Appeals for the appropriate circuit by May 10, 2013. Filing a petition for reconsideration by the Administrator of this final rule does not affect the finality of this action for the purposes of judicial review nor does it extend the time within which a petition for judicial review may be filed, and shall not postpone the effectiveness of such rule or action. This action may not be challenged later in proceedings to enforce its requirements. (See section 307(b)(2).)

List of Subjects in 40 CFR Part 52

Environmental protection, Air pollution control, Carbon monoxide, Incorporation by reference, Intergovernmental relations, Lead, Nitrogen dioxide, Ozone, Particulate matter, Reporting and recordkeeping requirements, Sulfur oxides, Volatile organic compounds.

Dated: February 26, 2013.

Samuel Coleman, P.E.,

Acting Regional Administrator, Region 6.

40 CFR part 52 is amended as follows:

PART 52—[AMENDED]

■ 1. The authority citation for part 52 continues to read as follows:

Authority: 42 U.S.C. 7401 *et seq.*

Subpart GG—New Mexico

■ 2. Section 52.1620 is amended as follows:

■ a. The first table in paragraph (c) entitled ''EPA Approved New Mexico Regulations'' is amended by revising the entry for part 72.

■ b. The second table in paragraph (e) entitled ''EPA Approved Nonregulatory Provisions and Quasi-Regulatory Measures in the New Mexico SIP'' is amended by adding to the end of the table a new entry for ''Letter of commitment for the New Mexico SIP for Minor NSR Public Notice.''

The revision and addition read as follows:

§ 52.1620 Identification of plan.

* * * * *

(c) * * *

EPA APPROVED NEW MEXICO REGULATIONS

State citation	Title/subject	State approval/ effective date	EPA approval date	Comments
New Mexico Administrative Code (NMAC) Title 20—Environment Protection Chapter 2—Air Quality				
*	*	*	*	* * *
Part 72	Construction Permits.	9/6/2006	3/11/2013 [Insert *FR* page number where document begins].	The SIP includes NMED's letter dated 11/7/2012, which commits the NMED Air Quality Bureau to providing notification on the NMED's website of all second 30-day public comment periods provided for under paragraph B of 20.2.72.206. NOT in SIP: the definitions of ''Accelerated review'', ''Affiliate'', ''Conflict of interest'', ''Interested party'' and ''Qualified outside firm'' in 20.2.72.7; subsection (B)(15) of 20.2.72.203; subsection (H) of 20.2.72.208; 20.2.72.221; 20.2.72.400–20.2.72.499; and 20.2.72.502. References to 20.2.77, 20.2.78, and 20.2.82 are approved for Part 72 only; underlying and related regulations for referred Parts NOT in SIP.
*	*	*	*	* * *

* * * * *

(e) * * *

* * * * *

EPA APPROVED NONREGULATORY AND QUASI-REGULATORY MEASURES IN THE NEW MEXICO SIP

Name of SIP provision	Applicable geographic or nonattainment area	State submittal/ effective date	EPA approval date	Explanation
*	*	*	* *	* *
Letter of commitment for the New Mexico SIP for Minor NSR Public Notice.	Statewide (except Bernalillo County).	11/7/2012	3/11/2013 [Insert *FR* page number where document begins].	Letter dated 11/7/2012 from NMED to EPA that commits the NMED Air Quality Bureau to providing notification on the NMED's website of all second 30-day public comment periods provided for under paragraph B of 20.2.72.206.

[FR Doc. 2013–05484 Filed 3–8–13; 8:45 am]

BILLING CODE 6560–50–P

ENVIRONMENTAL PROTECTION AGENCY

40 CFR Part 271

[EPA–R02–RCRA–2013–0144; FRL–9693–2]

New York: Final Authorization of State Hazardous Waste Management Program Revision

AGENCY: Environmental Protection Agency (EPA).

ACTION: Direct final rule.

SUMMARY: New York State has applied to EPA for final authorization of changes to its hazardous waste program under the Solid Waste Disposal Act, as amended, commonly referred to as the Resource Conservation and Recovery Act (RCRA). EPA has determined that these changes, with limited exceptions, satisfy all requirements needed to qualify for final authorization, and is authorizing the State's changes through this direct final action.

DATES: This final authorization will become effective on May 10, 2013 unless EPA receives adverse written comment by April 10, 2013. If EPA receives such comment, it will publish a timely withdrawal of this direct final rule or those paragraphs or sections of this rule which are the subject of the comments opposing the authorization in the **Federal Register** and inform the public that only the portion of the rule that is not withdrawn will take effect. (See Section E of **SUPPLEMENTARY INFORMATION** for further details).

ADDRESSES: Submit your comments, identified by EPA–R02–RCRA–2013–0144, by one of the following methods:

- *Federal eRulemaking Portal: http://www.regulations.gov.* Follow the on-line instructions for submitting comments.
- *Email: infurna.michael@.epa.gov.*
- *Fax:* (212) 637–4437, to the attention of Michael Infurna.
- *Mail:* Send written comments to Michael Infurna, EPA, Region 2, 290 Broadway, 22nd Floor, New York, NY 10007.
- *Hand Delivery or Courier:* Deliver your comments to Michael Infurna, EPA, Region 2, 290 Broadway, 22nd Floor, New York, NY 10007. Such deliveries are only accepted during the Regional Office's normal hours of operation. The public is advised to call in advance to verify the business hours. Special arrangements should be made for deliveries of boxed information.

Instructions: Direct your comments to Docket ID No. EPA–R02–RCRA–2013–0144. EPA's policy is that all comments received will be included in the public docket without change and may be made available on line at *http://www.regulations.gov,* including any personal information provided, unless the comment includes information claimed to be Confidential Business Information (CBI) or other information whose disclosure is restricted by statute. Do not submit information that you consider to be CBI or otherwise protected through *http://*

www.regulations.gov, or email. The Federal *http://www.regulations.gov* Web site is an ''anonymous access'' system, which means EPA will not know your identity or contact information unless you provide it in the body of your comment. If you send an email comment directly to EPA without going through *http://www.regulations.gov,* your email address will be automatically captured and included as part of the comment that is placed in the public docket and made available on the Internet. If you submit an electronic comment, EPA recommends that you include your name and other contact information in the body of your comment and with any disk or CD–ROM you submit. If EPA cannot read your comment due to technical difficulties, and cannot contact you for clarification, EPA may not be able to consider your comment. Electronic files should avoid the use of special characters or any form of encryption, and be free of any defects or viruses. (For additional information about EPA's public docket, visit the EPA Docket Center homepage at *http://www.epa.gov/epahome/dockets.htm*).

Docket: EPA has established a docket for this action under Docket ID No. EPA–R02–RCRA–2013–0144. All documents in the docket are listed in the *http://www.regulations.gov* Web site. Although it may be listed in the index, some information might not be publicly available, e.g., CBI or other information whose disclosure is restricted by statute. Certain other material, such as copyrighted material, is not placed on the Internet and will be publicly available only in hard copy. Publicly available docket materials are available either electronically in *http://www.regulations.gov* or in hard copy. You can view and copy New York's application during business hours at the following addresses: EPA Region 2 Library, 290 Broadway, 16th Floor, New York, NY 10007, Phone number: (212) 637–3185; or New York State Department of Environmental Conservation, Division of Solid and Hazardous Materials, 625 Broadway, Albany, NY 12233–7250, Phone number: (518) 402–8730. The public is advised to call in advance to verify the business hours of the above locations.

FOR FURTHER INFORMATION CONTACT:

Michael Infurna, EPA Region 2, 290 Broadway, 22nd floor, New York, NY 10007; telephone number (212) 637–4177; *fax number:* (212) 637–4437; *email address: infurna.michael@.epa.gov.*

SUPPLEMENTARY INFORMATION:

A. Why are revisions to state programs necessary?

States which have received final authorization from EPA under RCRA section 3006(b), 42 U.S.C. 6926(b), must maintain a hazardous waste program that is equivalent to, consistent with, and no less stringent than the Federal program. As the Federal program changes, States must change their programs and ask EPA to authorize the changes. Changes to State programs may be necessary when Federal or State statutory or regulatory authority is modified or when certain other changes occur. Most commonly, States must change their programs because of changes to EPA's regulations in 40 Code of Federal Regulations (CFR) parts 124, 260 through 268, 270, 273 and 279.

B. What decisions have we made in this rule?

We conclude that New York's application to revise its authorized program meets all of the statutory and regulatory requirements established by RCRA. Therefore, we grant New York final authorization to operate its hazardous waste program with the changes described in the authorization application. New York has responsibility for permitting Treatment, Storage, and Disposal Facilities (TSDFs) within its borders (except in Indian Country) and for carrying out the aspects of the RCRA program described in its revised program application, subject to the limitations of the Hazardous and Solid Waste Amendments of 1984 (HSWA). New Federal requirements and prohibitions imposed by Federal regulations that EPA promulgates under the authority of HSWA take effect in authorized States before the States are authorized for the requirements. Thus, EPA will implement those requirements and prohibitions in New York, including issuing permits if necessary, until the State is granted authorization to do so.

C. What is the effect of this authorization decision?

The effect of this decision is that a facility in New York subject to RCRA will now have to comply with the authorized State requirements instead of the equivalent Federal requirements in order to comply with RCRA. New York has enforcement responsibilities under its State hazardous waste program for violations of such program, but EPA retains its authority under statutory provisions, including but not limited to, RCRA sections 3007, 3008, 3013, and 7003. These sections include, but may not be limited to, the authority to:

- Do inspections, and require monitoring, tests, analyses, reports or other actions
- Enforce RCRA requirements and suspend or revoke permits
- Take enforcement actions regardless of whether the State has taken its own actions.

This action does not impose additional requirements on the regulated community because the State regulations for which New York is being authorized by this action are already effective, and are not changed by this action.

D. Why wasn't there a proposed rule before this rule?

EPA did not publish a proposal before this direct final rule because we view this as a routine program change and do not expect adverse comments that oppose this approval. We are providing an opportunity for public comment now. In addition to this rule, in the proposed rules section of this **Federal Register**, we are publishing a separate document that proposes to authorize the State program changes.

E. What happens if EPA receives comments that oppose this action?

If EPA receives comments that oppose this authorization, we will withdraw this rule by publishing a document in the **Federal Register** before the rule becomes effective. EPA will base any further decision on the authorization of the State program changes on the proposal mentioned in the previous paragraph. We will then address all public comments in a later final rule. You may not have another opportunity to comment. If you want to comment on this authorization, you must do so at this time.

If we receive adverse comments that oppose only the authorization of a particular change to the State hazardous waste program, we will withdraw that part of this rule but the authorization of the program changes that the comments do not oppose will become effective on the date specified above. The **Federal Register** withdrawal document will specify which part of the authorization will become effective, and which part is being withdrawn.

F. What has New York previously been authorized for?

New York initially received final authorization effective on May 29, 1986 (51 FR 17737) to implement its base hazardous waste management program. We granted authorization for changes to its program effective July 3, 1989 (54 FR 19184), May 7, 1990 (55 FR 7896), October 29, 1991 (56 FR 42944), May 22,

1992 (57 FR 9978), August 28, 1995 (60 FR 33753), October 14, 1997 (62 FR 43111), January 15, 2002 (66 FR 57679), March 14, 2005 (70 FR 1825, as corrected on April 4, 2005 at 70 FR 17286), August 31, 2009 (74 FR 31380) and January 12, 2010 (75 FR 1617).

G. What changes are we authorizing with this action?

On December 18, 2008, New York submitted a program revision application, seeking authorization of its changes in accordance with 40 CFR 271.21. Subsequently, on May 22, 2012 the State submitted signed Attorney General Certifications for the application. New York's revision application includes changes to the Federal Hazardous Waste program as addressed by the federal used oil management regulations that were published on September 10, 1992 (57 FR 41566) and amended May 3, 1993 (58 FR 26420), June 17, 1993 (58 FR 33341), March 4, 1994 (59 FR 10550), May 6, 1998 (63 FR 24963), and July 14, 1998 (63 FR 37780).

We now make a direct final decision, subject to receipt of written comments that oppose this action that, except as noted in Section H, New York's hazardous waste program revision satisfies all of the requirements necessary to qualify for final authorization. Therefore, we grant New York final authorization for the following program revisions listed in the following table. (The New York provisions are set forth in the Title 6, New York Codes, Rules and Regulations (6 NYCRR), Volume A–2A, Hazardous Waste Management System, amended effective May 12, 2006 and may be found in the ''Official Compilation of Codes Rules and Regulations of the State of New York'', published by the Department of State, printed by West Group, as of the March 15, 2006 supplement.) The State's statutory provisions which provide the legal basis for the State's implementation of its used oil program include Environmental Conservation Law sections 3–0301; 23–2305; 23–2307; 27–0703; and 27–0900 et.seq., and 71–2705. EPA is not authorizing any new New York State civil or criminal statute in this program revision authorization.

Description of federal requirement (Revision Checklists [1])	Analogous state regulatory authority [2]
Recycled Used Oil Management Standards (9/10/92, 57 FR 41566; 5/3/93, 58 FR 26420; 6/17/93, 58 FR 33341; 5/4/94, 59 FR 10550; 5/6/98, 63 FR 24963; 7/14/98, 63 FR 37780; Revision Checklists 112, 122, 130, 166).	Title 6 New York Codes, Rules and Regulations (6 NYCRR) 370.2(b)(213), 370.2(b)(216), 6 NYCRR 371.1(d)(1)(ii)('e') [3], 371.1(e)(2)(xi), 371.1(f)(10), 371.1(g)(1)(ii)('d'), 371.1(g)(1)(ii)('e'), 371.1(g)(1)(iii)('b')—('d'), 371.1(g)(1)(iii)('e')[removed], 371.1(g)(1)(iv), 6 NYCRR 373–2.1(a)(6), 373–3.1(a)(6), 6 NYCRR 374–1.8(a)(2)(i), 374–2.1(a) introductory paragraph, 374–2.1(a)(1), 374–2.1(a)(3), 374–2.1(a)(5) through 374–2.1(a)(9), 374–2.1(a)(11) through 374–2.1(a)(13), 374–2.1(a)(17), 374–2.1(a)(20) through 374–2.1(a)(26), 374–2.1(a)(28), 374–2.1(a)(29), 374–2.2, 374–2.3 (except 374–2.3(c)(3)-(6) and 374–2.3(f)), 374–2.4, 360–14.1(b)(7) 360–14.1(b)(8) 374–2.5(a)(1), 374–2.5(a)(3), 374–2.5(a)(4), 374–2.5(a)(5) introductory paragraph, 374–2.5(a)(5)(i), 374–2.5(a)(5)(ii), 374–2.5(a)(5)(iii) through (v), 374–2.5(b), 374–2.5(c), 374–2.5(d)(1), 374–2.5(d)(2), 374–2.5(d)(3), 374–2.5(e)(1) through 374–2.5(e)(3), 374–2.5(e)(5), 374–2.5(f), 374–2.5(g), 374–2.5(h), 374–2.6(a)(1), 374–2.6(a)(3), 374–2.6(b), 374–2.6(c), 374–2.6(d) (except 374–2.6(d)(4)), 374–2.6(e), 374–2.6(f), 374–2.6(g), 374–2.6(h), 374–2.6(i), 374–2.6(j), previous 374–2.7 and 374–2.8 [removed], 374–2.7(a), 374–2.7(b), 374–2.7(c), 374–2.7(d)(except 374–2.7(d)(4)), 374–2.7(e) (except 374–2.7(e)(5) and (6)), 374–2.7(f), 374–2.7(g), 374–2.7(h), 374–2.8, 374–2.9(a), 374–2.9(b), 374–2.9(c)

[1] A Revision Checklist is a document that addresses the specific changes made to the Federal regulations by one or more related final rules published in the **Federal Register**. EPA develops these checklists as tools to assist States in developing their authorization applications and in documenting specific State analogs to the Federal Regulations. For more information see EPA's RCRA State Authorization Web page at *http://www.epa.gov/osw/laws-regs/state/index.htm*

[2] The New York provisions are set forth in the Title 6 of the New York Codes, Rules and Regulations (6 NYCRR), as amended effective through May 12, 2006, unless otherwise specified.

[3] Note that at 6 NYCRR 371.1(d)(1)(ii)('e'), New York references old contact information for the Government Printing Office. The correct contact information, as found at 40 CFR 260.11(c) is: Superintendent of Documents, U.S. Government Printing Office, Washington, DC 20402, (202) 512–1800.

H. Where are the revised State rules different from the Federal rules?

More Stringent State Rules

New York used oil regulations are more stringent than the corresponding Federal regulations in a number of different areas. The more stringent provisions are being recognized as a part of the Federally-authorized program and are Federally enforceable. The specific more stringent provisions are discussed in detail in the revised Program Description New York submitted with the used oil authorization application, and include, but are not limited to, the following:

1. New York requires that laboratory tests or sample analyses, including rebuttable presumption analyses, be performed by a State-certified laboratory. The Federal program does not contain a lab certification program: 374–2.2(a)(2)(i)('b')('1'), 374–2.2(b)(1)(i), 374–2.5(e)(3)(i), 374–2.6(d)(2)(i), 374–2.7(d)(3)(i).

2. New York does not have analogs to 40 CFR 279.55(a)(1), (a)(2) introductory paragraph and (a)(3) because the State does not accept reliance upon generator knowledge of the halogen content.

3. Used oil collection centers are subject to the more stringent transfer facility standards: 374–2.1(a)(23), 374–2.4(b)(2)(i), 374–2.6(c)(1) introductory paragraph.

4. Used oil transfer facilities are subject to a number of additional requirements including the general facility standards for processing and re-refining facilities, additional testing, reporting and emergency procedures, and closure requirements: 374–2.5(a)(5) introductory paragraph, 374–2.5(d)(1)(i)('a'), 374.2.5(e)(2), 374–2.5(f)(8), 374–2.6(c)(1)(ii)('c'), 374–2.6(c)(1)(iv)('b'), 374–2.6(c)(2) introductory paragraph, 374–2.6(c)(2)(i)('b'), 374–2.6(c)(2)(ii)('a'), 374–2.6(c)(2)(ii)('f'), 374–2.6(c)(2)(vi)('d')('2'), 374–2.6(c)(2)(vi)('i').

5. Aboveground and underground used oil tanks must also be in compliance with more stringent installation, closure, inspection and repair standards, and registration requirements in New York's Petroleum Bulk Storage (PBS) rules, 6 NYCRR Parts 612, 613, and 614, including: 374–2.2(a) introductory paragraph, 374–2.3(c)(2), 374–2.5(f)(3)(i), (ii), and (iii), 374–2.6(e)(2) introductory paragraph, 374–2.6(e)(2)(i), (ii) and (iii), and 374–2.6(e)(7)(iii), 374–2.6(e)(7)(i)('a'), 374–2.7(e)(2)(i), (ii) and (iii).

6. Unlike the federal government, the state subjects used oil burners to the more stringent management standards in the state Air Quality regulations of 6 NYCRR Part 225: 374–2.2(a)(5)(ii), 374–2.5(d)(1)(iii), 374–2.7(a)(2) introductory paragraph, 374–2.9(a)(1).

7. New York prohibits the use of used oil as a dust suppressant: 374–2.2(c)(2), 374–2.3(a)(2)(v), 374–2.5(a)(5)(v), 374–2.6(a)(3)(v), 374–2.7(a)(2)(v), 374–2.9(c).

8. Storage of used oil must also be in compliance with local and state fire and building codes, including NFPA–30: 374–2.3(c)(1)(i) and (ii), 374–2.5(f)(2), 374–2.6(e)(1), 374–2.7(e)(1)(i) and (ii).

9. Spills are subject to requirements in Article 12 of the Navigation Law, its implementing regulations, and related provisions in the Environmental Conservation Law and the PBS regulations, in addition to the federal standards: 374–2.3(c)(9)(i): 374–2.5(d)(3) introductory paragraph, 374–2.5(d)(3)(v), 374–2.5(f)(7)(i), 374–2.6(e)(6)(i), 374–2.7(e)(8)(i)

10. New York requires additional labeling of units associated with used oil storage: 374–2.3(c)(8)(i), 374–2.3(c)(8)(ii), 374–2.5(f)(6)(i), 374–2.5(f)(6)(ii), 374–2.6(e)(5)(i), 374–2.6(e)(5)(ii), 374–2.7(e)(7)(i), 374–2.7(e)(7)(ii).

11. New York requires additional notification, recordkeeping and increased periods of record retention for several aspects of used oil management: 374–2.5(e)(5), 374–2.5(g)(1) and (g)(2) introductory paragraphs, 374–2.5(g)(1)(vi) and (g)(2)(vi), 374–2.5(g)(3), 374–2.5(g)(4)(i), 374–2.6(g)(1) introductory paragraph, 374–2.6(g)(1)(vi) and (g)(2)(vi), 374–2.6(g)(3), 374–2.6(h)(1)('a') and ('b'), 374–2.7(d)(5), 374–2.7(f)(2), 374–2.7(g)(1)(i), 374–2.7(g)(2), 374–2.8(c)(2), 374–2.8(e)(3), 374–2.8(f)(1)(i) and 374–2.8(f)(2).

12. New York prohibits the storage of used oil in pits, ponds and lagoons. Storage in surface impoundments, including those subject to regulation under 40 CFR Parts 264 and 265, is also prohibited: 374–2.2(c)(1).

13. New York requires that processors/re-refiners must submit to the department's Central Office and Regional Office, an annual report instead of a biennial letter, as required in the federal regulations: 374–2.6(h)(2).

14. The New York used oil regulations have several more stringent provisions which include, but are not limited to:

a. New York prohibits the disposal of recyclable used oil by means of absorbents, except to clean up spills: 374–2.2(c)(4).

b. If a facility owner or operator does not rebut the presumption, the owner or operator must reject the load and notify the department Regional Solid and Hazardous Materials engineer: 374–2.6(d)(3).

c. Owners and operators of used oil transfer facilities must test all incoming loads of used oil for total halogen content, in accordance with a written quality control plan: 374–2.5(e)(2).

Broader in Scope Requirements

We consider the following State requirements to be beyond the scope of the Federal program, and therefore, EPA is not authorizing these requirements. The specific broader in scope provisions are discussed in detail in the revised Program Description New York submitted with the used oil authorization application, and include, but are not limited to, the following:

1. New York regulates used oil containing greater than 50 ppm of PCB wastes as hazardous waste, unless the PCBs were derived solely from small capacitors; however, these wastes are not considered hazardous wastes under the Federal RCRA program. PCB wastes are regulated under the Federal Toxic Substances Control Act (TSCA) at 40 CFR part 761. The following New York used oil provisions are broader in scope because they include requirements associated with the regulation of PCB waste as a state-only hazardous waste: 374–2.2(a)(9). 374–2.2(b)(1)/Table 1, 374–2.5(e)(4), 374–2.6(d)(4).

2. New York has not adopted the Federal exclusion at 40 CFR 261.4(b)(14) which exempts from the hazardous waste regulations used oil re-refining distillation bottoms that are used as feedstock to manufacture asphalt products. Such used oil re-refining bottoms are subject to regulation in New York.

3. Subdivision 374–2.3(f) details requirements for accepting used oil from do-it-yourselfers (DIYs) at service and retail establishments. These requirements regulate entities not subject to the Federal used oil regulations.

Broader-in-scope requirements are not part of the authorized program and EPA cannot enforce them. Although entities must comply with these requirements in accordance with State law, they are not RCRA requirements.

I. Who handles permits after the authorization takes effect?

New York will issue permits for all the provisions for which it is authorized and will administer the permits it issues. EPA will continue to administer any RCRA hazardous waste permits or portions of permits still in effect which we issued prior to the effective date of this authorization, and also to process permit modification requests for facilities with existing permits. EPA will not issue any more new permits or new portions of permits for the provisions listed in the Table in section G above after the effective date of this authorization. Pursuant to § 3006(g)(1) of RCRA, EPA may continue to issue or deny permits to facilities within the State to implement those regulations promulgated under the authority of HSWA for which New York is not authorized.

J. How does today's action affect Indian country (18 U.S.C. 115) in New York?

The State of New York's Hazardous Waste Program is not authorized to operate in Indian country within the State. Therefore, this action has no effect on Indian country. EPA will continue to implement and administer the RCRA program in these lands.

K. What is codification and is EPA codifying New York's hazardous waste program as authorized in this rule?

Codification is the process of placing the State's statutes and regulations that comprise the State's authorized hazardous waste program into the Code of Federal Regulations. We do this by referencing the authorized State rules in 40 CFR part 272. If this rule takes effect, or we finalize the companion proposal to authorize the State's changes to its hazardous waste program, we may, at a later date, amend 40 CFR part 272, subpart HH to codify New York's authorized program.

L. Statutory and Executive Order Reviews

This rule only authorizes hazardous waste requirements pursuant to RCRA section 3006 and imposes no requirements other than those imposed by State law. Therefore, this rule complies with applicable executive orders and statutory provisions as follows.

1. Executive Order 12866: Regulatory Planning and *Review* and *Executive Order 13563: Improving Regulation and Regulatory Review*—The Office of Management and Budget (OMB) has exempted this rule from its review under Executive Orders 12866 (58 FR 51735, October 4, 1993) and 13563 (76 FR 3821, January 21, 2011).

2. Paperwork Reduction Act—This rule does not impose an information collection burden under the Paperwork Reduction Act (44 U.S.C. 3501 *et seq.*)

3. Regulatory Flexibility Act—After considering the economic impacts of this rule on small entities under the Regulatory Flexibility Act (5 U.S.C. 601 *et seq.*), I certify that this rule will not have a significant economic impact on a substantial number of small entities.

4. Unfunded Mandates Reform Act—Because this rule approves pre-existing requirements under State law and does not impose any additional enforceable duty beyond that required by State law, it does not contain any unfunded mandate or significantly or uniquely affect small governments, as described in the Unfunded Mandates Reform Act (Pub. L. 104B4).

5. Executive Order 13132: Federalism—Executive Order 13132 (64 FR 19885, April 23, 1997) does not apply to this rule because it will not have federalism implications (i.e., substantial direct effects on the States, on the relationship between the national government and the States, or on the distribution of power and responsibilities among the various levels of government).

6. Executive Order 13175: Consultation and Coordination with Indian Tribal Governments—Executive Order 13175 (65 FR 67240, November 6, 2000) does not apply to this rule because it will not have tribal implications (i.e., substantial direct effects on one or more Indian tribes, on the relationship between the Federal government and Indian tribes, or on the distribution of power and responsibilities between the Federal Government and Indian tribes).

7. Executive Order 13045: Protection of Children from Environmental Health & Safety Risks—This rule is not subject to Executive Order 13045 (62 FR 19885, April 23, 1997) because it is not economically significant and it is not based on health or safety risks.

8. Executive Order 13211: Actions that Significantly Affect Energy Supply, Distribution, or Use—This rule is not subject to Executive Order 13211 (66 FR 28355, May 22, 2001) because it is not a significant regulatory action as defined in Executive Order 12866.

9. National Technology Transfer Advancement Act—EPA approves State programs as long as they meet criteria required by RCRA, so it would be inconsistent with applicable law for EPA, in its review of a State program, to require the use of any particular voluntary consensus standard in place of another standard that meets the requirements of RCRA. Thus, section 12(d) of the National Technology Transfer and Advancement Act (15 U.S.C. 272 Note) does not apply to this rule.

10. Congressional Review Act—EPA will submit a report containing this rule and other information required by the Congressional Review Act (5 U.S.C. 801 et seq.) to the U.S. Senate, the U.S. House of Representatives, and the Comptroller General of the United States prior to publication in the **Federal Register**. A major rule cannot take effect until 60 days after it is published in the **Federal Register**. This action is not a ''major rule'' as defined by 5 U.S.C. 804(2). This action will be effective on May 10, 2013.

List of Subjects in 40 CFR Part 271

Environmental protection, Administrative practice and procedure, Confidential business information, Hazardous waste, Hazardous waste transportation, Indian lands, Intergovernmental relations, Penalties, Reporting and recordkeeping requirements.

Authority: This action is issued under the authority of sections 2002(a), 3006 and 7004(b) of the Solid Waste Disposal Act as amended (42 U.S.C. 6912(a), 6926, 6974(b)).

Dated: December 19, 2012.

Judith A. Enck,

Regional Administrator, Region 2.

[FR Doc. 2013–05481 Filed 3–8–13; 8:45 am]

BILLING CODE 6560–50–P

DEPARTMENT OF TRANSPORTATION

Pipeline and Hazardous Materials Safety Administration

49 CFR Parts 105, 171, 172, 173, 177, 178, and 180

[Docket No. PHMSA–2011–0138 (HM–218G)]

RIN 2137–AE78

Hazardous Materials; Miscellaneous Amendments (RRR)

AGENCY: Pipeline and Hazardous Materials Safety Administration (PHMSA), DOT.

ACTION: Final rule.

SUMMARY: PHMSA is amending the Hazardous Materials Regulations (HMR) to make miscellaneous amendments to update and clarify certain regulatory requirements. These amendments promote safer transportation practices, eliminate unnecessary regulatory requirements, address a petition for rulemaking, incorporate a special permit into the HMR, facilitate international commerce, and simplify the regulations. These amendments also update various entries in the Hazardous Materials Table (HMT) and corresponding special provisions, clarify the lab pack requirements for temperature-controlled materials, and require hazmat employers to make hazmat employee training records available upon request to an authorized official of the Department of Transportation (DOT) or an entity explicitly granted authority to enforce the HMR.

DATES: *Effective Date:* This rule is effective May 10, 2013.

Voluntary Compliance Date: Voluntary compliance with all amendments is authorized March 11, 2013.

FOR FURTHER INFORMATION CONTACT: Rob Benedict, Standards and Rulemaking Division, (202) 366–8553, Pipeline and Hazardous Materials Safety Administration, U.S. Department of Transportation, 1200 New Jersey Avenue SE., Washington, DC 20590–0001.

SUPPLEMENTARY INFORMATION:

Contents

I. Background
A. Notice of Proposed Rulemaking (NPRM)
B. Commenters
II. Discussion of Amendments and Applicable Comments
A. General Comments
B. Provisions Adopted in This Final Rule and Discussion of Comments
C. Comments Beyond the Scope of This Rulemaking
D. Provisions Not Adopted in This Final Rule and Discussion of Comments
III. Regulatory Analyses and Notices
A. Statutory/Legal Authority for the Rulemaking
B. Executive Order 12866, Executive Order 13563 and DOT Regulatory Policies and Procedures
C. Executive Order 13132
D. Executive Order 13175
E. Regulatory Flexibility Act, Executive Order 13272, and DOT Procedures and Policies
F. Paperwork Reduction Act
G. Regulatory Identifier Number (RIN)
H. Unfunded Mandates Reform Act
I. Environmental Assessment
J. Privacy Act
K. International Trade Analysis

I. Background

A. Notice of Proposed Rulemaking (NPRM)

On April 26, 2012, PHMSA published a NPRM under Docket PHMSA 2011–0138 [77 FR 24885] (HM–218G) that proposed amendments to update and clarify existing requirements of the HMR. The NPRM and this Final Rule are part of the Department of Transportation's Retrospective Regulatory Review (RRR) designed to identify ways to improve the Hazardous Materials Regulations (HMR; 49 CFR parts 171–180). The NPRM proposed amendments to update and clarify existing requirements by incorporating changes into the HMR based on PHMSA's own initiatives. The proposed amendments were identified through an extensive review of the HMR and previously issued letters of interpretation to the regulated hazardous materials transportation community. In addition, the NPRM proposed to incorporate a special permit with a longstanding history of safety into the HMR and respond to a petition for rulemaking. The changes proposed in the April 26, 2012 NPRM are summarized below:

- Permit designated agents for non-residents to submit designation requests by electronic mail in addition to traditional mail.
- Add the Sulphur Institute's (TSI) ''Molten Sulphur Rail Tank Car Guidance'' document to the list of informational materials not requiring incorporation by reference in § 171.7 (Responds to petition for rulemaking P–1581).

• Revise the § 172.101 Hazardous Materials Table (HMT) to correct an error in the transportation requirements for entries listed under the proper shipping name, ''Hydrazine Dicarbonic Acid Diazide.''

• Revise the § 172.101 HMT to remove the entry for ''Zinc ethyl, see Diethylzinc'' that was superseded by proper shipping names adopted in a previous rulemaking.

• Add the inadvertently omitted entries for ''Paint related material, flammable, corrosive *(including paint thinning or reducing compound)*'' UN3469, PG II, and PG III to the § 172.101 HMT.

• Remove references to special provisions B72 and B74 in § 172.102.

• Revise special provision 138 in § 172.102 to clarify the lead solubility calculation used to classify a material as a Marine Pollutant.

• Revise the shipping paper requirements in § 172.203(e) to permit the placement of phrase ''Residue last contained'' before or after the basic shipping description sequence, or for rail shipments, directly preceding the proper shipping name in the basic shipping description sequence.

• Update the training recordkeeping requirements in § 172.704 to specify that a hazmat employer must make hazmat employee training records available upon request, at a reasonable time and location, to an authorized official of the Department of Transportation or the Department of Homeland Security (DHS).

• Clarify that the material of trade exception in § 173.6 may be used when transporting Division 2.1 and 2.2 gases in Dewar flasks.

• Clarify the lab pack provisions in § 173.12 pertaining to temperature-controlled materials contained in a lab pack.

• Clarify the exceptions for external emergency self-closing valves on cargo tank motor vehicles (CTMVs) in § 173.33(g) to specify that external emergency self-closing valves on MC 338 cargo tanks containing cryogenic liquids may remain open during transportation.

• Correct an inadvertent deletion of the § 173.62 packaging requirements for explosives.

• Incorporate special permit DOT SP–13556 into § 173.134, to authorize the transportation by motor vehicle of certain regulated medical wastes, designated as sharps, in non-DOT specification containers fitted into wheeled racks.

• Revise the requirements for cargo air transport of alcoholic beverages in § 173.150 to harmonize with the International Civil Aviation Organization's (ICAO) Technical Instructions (TI).

• Clarify the exceptions in § 173.159a for non-spillable batteries secured to skids or pallets.

• Revise § 178.2(c) to clarify the applicability of the closure notification requirements for packages containing residues.

• Correct regulatory citations in § 178.2(c).

• Clarify the requirements for the Flame Penetration Resistance test specified for chemical oxygen generators and certain compressed gases in Appendix E to Part 178.

• Clarify the inspection record requirements in § 180.416 for discharge systems of cargo tanks transporting liquefied compressed gases.

B. Commenters

The comment period for the April 26, 2012 NPRM closed on June 25, 2012. PHMSA received 22 public comments in response to the NPRM's proposed amendments, from trade associations representing various industries, individual businesses, and concerned citizens who make up the regulated community. While the majority of the commenters supported the proposals in the NPRM, some commenters expressed adverse opinions with specific proposals. In response to the feedback provided by these commenters, PHMSA will address and discuss both the proposals adopted and not adopted into the HMR by this rulemaking under the heading, ''*Discussion of Amendments and Applicable Comments.''* In addition, some commenters provided suggestions for revisions that were not specifically addressed in the NPRM, and therefore, are considered beyond the scope of this rulemaking. The comments, as submitted to this docket, may be accessed via *http://www.regulations.gov* and were submitted by the following individuals, companies, and associations (abbreviations used throughout the document and Docket Reference numbers are also provided):

Commenter	Abbreviation	Docket reference
American Coating Association, Inc	ACA	PHMSA–2011–0138–0012
American Trucking Association	ATA	PHMSA–2011–0138–0007
Association of American Railroads	AAR	PHMSA–2011–0138–0022
Association of Hazmat Shippers	AHS	PHMSA–2011–0138–0011
Council on Safe Transportation of Hazardous Articles, Inc	COSTHA	PHMSA–2011–0138–0010
Dangerous Goods Advisory Council	DGAC	PHMSA–2011–0138–0009
The Fertilizer Institute	TFI	PHMSA–2011–0138–0021
International Vessel Operators Dangerous Goods Association Inc	IVODGA	PHMSA–2011–0138–0014
Koch Sulfur Products Company LLC	KSPC	PHMSA–2011–0138–0025
National Association of Chemical Distributors	NACD	PHMSA–2011–0138–0023
National Tank Truck Carriers	NTTC	PHMSA–2011–0138–0019
Oxbow Sulphur Inc	Oxbow	PHMSA–2011–0138–0018
Potash Corporation of Saskatchewan	PCS	PHMSA–2011–0138–0026
Richard Zbilski	Richard Zbilski	PHMSA–2011–0138–0027
Reusable Industrials Packaging Association	RIPA	PHMSA–2011–0138–0016
Stericycle, Inc	Stericycle	PHMSA–2011–0138–0005
The Sulphur Institute	TSI	PHMSA–2011–0138–0017
Transammonia Inc	Transammonia	PHMSA–2011–0138–0020
Union Tank Car Company	UTCC	PHMSA–2011–0138–0029
U.S. Clay Producers Traffic Association	USCPTA	PHMSA–2011–0138–0024
Utility Solid Waste Activities Group	USWAG	PHMSA–2011–0138–0013
Veolia ES Technical Solutions, L.L.C	Veolia	PHMSA–2011–0138–0008

II. Discussion of Amendments and Applicable Comments

A. General Comments

On September 30, 1993, President Bill Clinton issued Executive Order 12866 which asked Federal agencies ''to enhance planning and coordination with respect to both new and existing regulations; to reaffirm the primacy of Federal agencies in the regulatory decision-making process; to restore the integrity and legitimacy of regulatory review and oversight; and to make the process more accessible and open to the public.''

On October 21, 2011, President Barack Obama issued Executive Order 13563 which is supplemental to and reaffirms the principles, structures, and definitions governing contemporary regulatory review that were established in Executive Order 12866. This executive order urged government agencies to consider regulatory approaches that reduce burdens and maintain flexibility and freedom of choice for the public. Finally, federal agencies were directed to periodically review existing significant regulations; retrospectively analyze rules that may be outmoded, ineffective, insufficient, or excessively burdensome; and modify, streamline, expand, or repeal regulatory requirements in accordance with what has been learned.

On May 10, 2012, President Barack Obama issued Executive Order 13610 (Identifying and Reducing Regulatory Burdens) reaffirming the goals of Executive Order 13563 (Improving Regulation and Regulatory Review) issued January 18, 2011, and Executive Order 12866 (Regulatory Planning and Review) issued September 30, 1993. Executive Order 13610 directs agencies to prioritize ''those initiatives that will produce significant quantifiable monetary savings or significant quantifiable reductions in paperwork burdens while protecting public health, welfare, safety, and our environment.'' Executive Order 13610 further instructs agencies to give consideration to the cumulative effects of their regulations, including cumulative burdens, and prioritize reforms that will significantly reduce burdens.

In accordance with Executive Orders 13610 and 13563, PHMSA has undertaken a retrospective review of the HMR. This final rule and the NPRM that preceded it are part of that initiative, and were based on an internal review of the HMR, special permits, petitions, and letters of interpretation. The April 26, 2012 NPRM specifically addressed a petition, a special permit, and various clarifications identified in letters of interpretation and through PHMSA internal review of the HMR. The publication of the NPRM provided an opportunity for further public participation in the development of the regulatory amendments, and promoted an exchange of information and perspectives among the various stakeholders.

PHMSA received 22 comments in response to the April 26, 2012 NPRM which were predominately positive. Some commenters agreed in principle with the proposed amendments and offered revisions to improve the clarity of the regulatory text. In some cases, no comments to proposed amendments were received. In these circumstances, PHMSA attributed the lack of comment to either the nature of the amendment being editorial, or a general acknowledgement from the regulated community that no opposition to the change was warranted. Finally, negative comments were also received on some specific issues. A detailed description of the original proposals in the April 26, 2012 NPRM, a summary of the comments received, responses to those comments, and PHMSA's decision on future actions are detailed below.

B. Provisions Adopted in This Final Rule and Discussion of Comments

In this section, PHMSA discusses the changes proposed in the NPRM and the comments received in response to the NPRM. To clearly identify the issues addressed in this final rule, PHMSA provides the following list of adopted amendments discussed in this section:

- Permit designated agents for non-residents to submit designation requests by electronic mail in addition to traditional mail.
- Add the Sulphur Institute's (TSI) ''Molten Sulphur Rail Tank Car Guidance'' document to the list of informational materials not requiring incorporation by reference in § 171.7 (Responds to petition for rulemaking P–1581).
- Revise the § 172.101 HMT to correct an error in the transportation requirements for entries listed under the proper shipping name, ''Hydrazine Dicarbonic Acid Diazide.''
- Revise the § 172.101 HMT to remove the entry for ''Zinc ethyl, see Diethylzinc'' that was superseded by proper shipping names adopted in a previous rulemaking.
- Add the entries for ''Paint related material, flammable, corrosive *(including paint thinning or reducing compound)*'' UN3469, PG II, and PG III to the § 172.101 HMT that were inadvertently omitted.
- Remove references to special provisions B72 and B74 in § 172.102.
- Revise special provision 138 in § 172.102 to clarify the lead solubility calculation used to classify a material as a Marine Pollutant.
- Revise the shipping paper requirements in § 172.203(e) to permit the phrase ''Residue last contained'' to be placed before or after the basic shipping description sequence, or for rail shipments, directly preceding the proper shipping name in the basic shipping description sequence.
- Update the training recordkeeping requirements in § 172.704 to specify that a hazmat employer must make hazmat employee training records available upon request, at a reasonable time and location, to an authorized official of the Department of Transportation or of an entity explicitly granted authority to enforce the HMR.
- Clarify that the material of trade exception in § 173.6 may be used when transporting Division 2.1 and 2.2 gases in Dewar flasks.
- Clarify the lab pack provisions in § 173.12 pertaining to temperature-controlled materials contained in a lab pack.
- Clarify the exceptions for external emergency self-closing valves on CTMVs in § 173.33(g) to specify that external emergency self-closing valves on MC 338 cargo tanks containing cryogenic liquids may remain open during transportation.
- Correct an inadvertent deletion of the § 173.62 packaging requirements for explosives.
- Incorporate special permit DOT SP–13556 into § 173.134, to authorize the transportation by motor vehicle of certain regulated medical wastes, designated as sharps, in non-DOT specification containers fitted into wheeled racks.
- Revise the requirements for cargo air transport of alcoholic beverages § 173.150 to harmonize with the ICAO TI.
- Clarify the exceptions in § 173.159a for non-spillable batteries secured to skids or pallets.
- Correct regulatory citations in § 178.2(c).
- Clarify the requirements for the Flame Penetration Resistance test specified for chemical oxygen generators and certain compressed gases in Appendix E to Part 178.
- Clarify the inspection record requirements in § 180.416 for discharge systems of cargo tanks transporting liquefied compressed gases.

Designated Agents for Non-Residents

Currently, § 105.40 prescribes the requirements for designated agents for non-residents. In specific instances, such as the approval of fireworks manufactured by a foreign entity, the HMR require non-residents of the United States who perform hazmat operations within the United States to designate a permanent resident of the United States to act as an agent and receive documents on behalf of the non-resident. As specified in the HMR, non-residents of the United States must prepare a designation notification and file it with PHMSA in accordance with § 105.40.

The HMR only permit designated agent notification documents to be mailed to the Approvals and Permits Division, PHMSA, Attn: PHH–30, U.S. Department of Transportation, East Building, 1200 New Jersey Avenue SE., Washington, DC 20590–0001, as specified in § 105.40(d). Revising this requirement to allow an agent designation to be transmitted by electronic mail would provide greater regulatory flexibility and align the submission of these documents with the procedures currently in place for the submission of other documents required by PHMSA.

In the April 26, 2012 NPRM, PHMSA proposed to amend § 105.40(d) to permit agent designations to be submitted by electronic mail to the special permits or approvals office, as appropriate. The option to submit a completed agent designation to the Approvals and Permits Division by mail would remain unchanged.

PHMSA received no comments on the proposed change to the requirements for designated agents for non-residents. Therefore, we are adopting these amendments to § 105.40(d), as proposed in the NPRM.

Molten Sulphur Tank Rail Car Guidance Document

Section 171.7 lists all standards incorporated by reference into the HMR and informational materials not requiring incorporation by reference. The informational materials not requiring incorporation by reference are noted throughout the HMR and provide best practices and additional safety measures that are not mandatory but, may enhance safety and compliance.

The Sulphur Institute (TSI) represents the sulfur industry in the United States on a variety of issues including the safe transportation of sulfur in commerce. TSI submitted petition P–1581 (Docket Number PHMSA–2007–28054) requesting that PHMSA incorporate by reference TSI's ''Molten Sulphur Tank Rail Car Guidance Document.'' This document provides best practices for the safe transport of molten sulfur in rail tank cars. TSI also requested that we amend § 173.24(b)(4) to add the sentence ''Dried residue of molten sulfur on tank cars shall meet the 'Molten Sulphur Rail Car Guidance Document' incorporated by reference in § 171.7.''

In the NPRM published on April 26, 2012, PHMSA proposed to adopt ''Molten Sulphur Rail Tank Car Guidance'' in the list of informational materials not requiring incorporation by reference in § 171.7(b). In addition, PHMSA proposed to revise the entries for ''Sulfur, Molten'' specified in the § 172.101 HMT to reference special provision ''R1'' and add special provision ''R1'' to the R codes specified in § 172.102(c)(6). This new special provision will recommend the use of the Molten Sulphur Rail Tank Car Guidance document when transporting ''Sulfur, Molten'' residues by rail; however, it will not make its use mandatory. PHMSA did not propose adding TSI's suggested language ''Dried residue of molten sulfur on tank cars shall meet the 'Molten Sulphur Rail Car Guidance Document' incorporated by reference in § 171.7'' to § 173.24(b)(4).

PHMSA received eight comments on the proposed addition of the ''Molten Sulphur Rail Tank Car Guidance'' to the list of informational materials not requiring incorporation by reference and subsequent addition of special provision ''R1.'' Seven of these comments expressed support: KOCH, Oxbow, PCS, TFI, Transammonia, TSI, and UTCC. KOCH, who ships more than 500,000 tons of sulfur annually; Oxbow, who ships over 13,000 railcars of molten sulfur annually; PCS who receives 1.6 million tons of sulfur annually; Transammonia, who ships over 2,500 railcars of molten sulfur annually; and UTCC, who provides the means of transporting sulfur in approximately 1,100 tank cars, note that they all assisted in developing this document and believe it will benefit carriers, government inspectors, and shippers by promoting safer handling practices. TFI, a national trade association representing fertilizer importers, producers, retailers and wholesalers, reiterates the comments of these companies. In addition to expressing support for the adoption of this document, one commenter, TSI, offers two minor editorial changes to the proposed regulatory text. Specifically, TSI requests PHMSA update the mailing address listed for TSI and that PHMSA revise the edition listed for the document.

In contrast, the AAR, on behalf of itself and its member railroads, provided comments that strongly oppose the proposed amendment. AAR states its belief that the TSI guidance contradicts certain requirements specified in the HMR. Specifically, AAR notes that § 173.24(b)(4) specifies ''there will be no hazardous materials residue adhering to the outside of a package during transport.'' Furthermore, § 174.57 specifies ''all hazardous material which has leaked from a package in a rail car or on railroad property must be carefully removed.'' AAR states that §§ 173.24(b)(4) and 174.57 appear to directly contradict the TSI guidance which permits residue on the outside of a rail car and only cautions against the presence of excessive residue.

AAR notes that even small amounts of molten sulfur residue can generate significant concentrations of sulfur dioxide (SO_2), and sulfur trioxide (SO_3) which are both known eye and respiratory irritants, and hydrogen sulfide (H_2S), which has demonstrated the ability to act as a nervous system toxin. Finally, AAR expresses concern that the presence of an ''acceptable'' level of molten sulfur residue on the outside of the rail car may cause emergency response actions when they are not necessary.

PHMSA appreciates the comments received regarding this proposed amendment. PHMSA agrees with AAR that §§ 173.24(b)(4) and 174.57 specify that no hazardous materials residue is permitted to adhere to the outside of a package during transport and that all hazardous material that has leaked from a package in a rail car or on railroad property must be carefully removed. However, PHMSA believes that minimal levels of sulfur residue on the outside of a rail tank car pose minimal transportation risk due to physical state, chemical properties, and amount. PHMSA also recognizes the difficulty in removing dried sulfur residue while in transportation.

PHMSA does not dispute AAR's assertion that molten sulfur emits dangerous chemicals such H_2S, SO_2, and SO_3. However, as noted above, the dried, fully-cooled residue does not generate such concentrations of H_2S, SO_2, and SO_3 and poses little safety risk. To this end, PHMSA considers the ''Molten Sulphur Rail Tank Car Guidance'' to be a valuable tool for instances in which a minimal amount of residue remains on a tank car.

AAR further comments that molten sulfur residue on the outside rail car

may cause emergency response actions when they are not necessary. Residue of molten sulfur could also pose a safety risk by obscuring valuable tank car markings, labels, and stencils as well as tank car safety appliance features, such as ladders. PHMSA believes that the ''Molten Sulphur Rail Tank Car Guidance'' provides information on when the cleaning and removing of this residue is necessary, thus decreasing the likelihood that the residue will obscure hazardous materials communication or safety features or result in unnecessary emergency response actions.

PHMSA notes that the majority of comments for the adoption of the ''Molten Sulphur Rail Tank Car Guidance'' in the list of informational materials not requiring incorporation by reference in § 171.7(b) were positive and believes this adoption would be beneficial to carriers, government inspectors, and shippers. PHMSA further emphasizes that recognition of this document would not impose any new requirements. Instead, it would be adopted into the list of informational materials *not* requiring incorporation by reference, and therefore, would be provided for guidance purposes only. Therefore, PHMSA is adopting these amendments to §§ 171.7(b) and 172.102(c)(6) as proposed in the NPRM with the minor editorial changes identified by TSI.

Hazardous Materials Table (HMT) Revisions

The HMT in § 172.101 contains information regarding the transport conditions, proper shipping name, hazard class and division, identification number, packing group, label codes, special provisions, authorized expectations, non-bulk, and bulk packagings, quantity limitations and vessel stowage requirements for hazardous materials. Accurate information in the HMT is essential for the safe shipment of hazardous materials by all modes.

In the NPRM published on April 26, 2012, PHMSA proposed a number of revisions to the § 172.101 HMT, and the special provisions specified in § 172.102 to clarify the regulations, correct inadvertent errors, and improve the accuracy of the information contained in the HMT. The amendments to the § 172.101 HMT proposed in the April 26, 2012 NPRM included:

- Remove the Packing Group II and III entries for the proper shipping name, ''Hydrazine dicarbonic acid diazide'' in the § 172.101 HMT and clarify that Hydrazine dicarbonic acid diazide'' is forbidden.
- Remove the proper shipping name, ''Zinc ethyl, see Diethylzinc'' since ''UN1366 Diethylzinc'' is no longer listed in the § 172.101 HMT. Individuals offering ''Zinc ethyl'' should choose one of the more appropriate generic entries for organometallic compounds and substances.
- Add the entries for ''Paint related material, flammable, corrosive *(including paint thinning or reducing compound)''* UN3469, PG II, and PG III.
- Remove Special provision B72 from Column (7) for the following entries:
  - UN2484 tert-Butyl isocyanate;
  - UN3492 Toxic by inhalation liquid, corrosive, flammable, n.o.s. *with an inhalation toxicity lower than or equal to 200 ml/m3 and saturated vapor concentration greater than or equal to 500 LC50;*
  - UN3488 Toxic by inhalation liquid, flammable, corrosive, n.o.s. *with an LC50 lower than or equal to 200 ml/m3 and saturated vapor concentration greater than or equal to 500 LC50;* and
  - UN3490 Toxic by inhalation liquid, water-reactive, flammable, n.o.s. *with an LC50 lower than or equal to 200 ml/m3 and saturated vapor concentration greater than or equal to 500 LC50.*
- Remove Special provision B74 from Column (7) for the following entries:
  - NA2927 Ethyl phosphonothioic dichloride, anhydrous;
  - NA2845 Ethyl phosphonous dichloride, anhydrous *pyrophoric liquid;*
  - NA2927 Ethyl phosphorodichloridate;
  - NA2845 Methyl phosphonous dichloride, *pyrophoric liquid;*
  - UN1831 Sulfuric acid, fuming *with 30 percent or more free sulfur trioxide;*
  - UN3489 Toxic by inhalation liquid, flammable, corrosive, n.o.s. *with an LC50 lower than or equal to 1000 ml/m3 and saturated vapor concentration greater than or equal to 10 LC50;* and
  - UN3491 Toxic by inhalation liquid, water-reactive, flammable, n.o.s. *with an LC50 lower or equal to 1000 ml/m3 and saturated vapor concentration greater than or equal to 10 LC50.*
- Revise the entries for ''Sulfur, Molten'' specified in the § 172.101 HMT to reference special provision ''R1.''

PHMSA received nine comments on these proposed revisions. Specifically, ACA supported the proposed addition of inadvertently omitted entries for ''Paint related material, flammable, corrosive *(including paint thinning or reducing compound)*'' UN3469, PG II, and PG III. ACA noted it supports ''this proposed amendment and [is] pleased to see that this correction is being addressed.''

The eight other comments regarding these proposed revisions were related to the proposed revision of the entries for ''Sulfur, Molten'' specified in the § 172.101 HMT to reference special provision ''R1.'' Those comments are addressed above in the section entitled *Molten Sulphur Tank Rail Car Guidance Document.* Based on the aforementioned discussion, revision of the entries for ''Sulfur, Molten'' specified in the § 172.101 HMT to reference special provision ''R1'' will be adopted in this final rule.

PHMSA did not receive any other comments on the proposed revisions to the § 172.101 HMT as the revisions proposed in the April 26, 2012 NPRM were primarily editorial in nature or simply correcting inadvertent errors in the HMT. Therefore, based on the above comments and no opposition to any of the other editorial amendments, PHMSA is adopting these amendments to the § 172.101 HMT as proposed in the NPRM.

Special Provision Revisions

The special provisions listed in column (7) of the § 172.101 HMT contain packaging provisions, prohibitions, exceptions from requirements for particular quantities or forms of materials, and requirements or prohibitions applicable to specific modes of transportation. In the April 26, 2012 NPRM, PHMSA proposed revisions to the special provisions specified in § 172.102 to clarify the regulations and correct inadvertent errors. The amendments to the special provisions contained in § 172.102 proposed in the April 26, 2012 NPRM included:

- Add special provision ''R1'' to the R codes specified in § 172.102(c)(6). This new special provision will reference the ''Molten Sulphur Rail Tank Car Guidance'' document as a resource for best practices for the cleaning of tank cars containing ''Sulfur, Molten'', where product has spilled and dried on the exterior surface of the tank car.
- Revise special provision 138 specified in § 172.102(c)(1) to harmonize the HMR with the International Maritime Dangerous Goods (IMDG) code and to clarify that the solubility calculation provided in special provision 138 should be applied when determining when to use the ''lead compounds, soluble n.o.s.'' entry in the List of Marine Pollutants found in § 172.101, Appendix B.

PHMSA received nine comments on these proposed amendments. Eight of those comments are related to the proposed addition of special provision R1 and are addressed above in the section entitled *Molten Sulphur Tank*

Rail Car Guidance Document. Based on those comments special provision R1 specified in § 172.102 will be adopted in this final rule.

PHMSA received one comment on the proposed revision of special provision 138 specified in § 172.102. In its comment, IVODGA supports the proposed amendment which revises special provision 138 to clarify the solubility calculations to be used for classification and identification of lead compounds and to harmonize the HMR provisions with the IMDG Code SP 199. Specifically, IVODGA welcomes the corrections to the § 172.101 HMT to include the provisions of HM–215 rulemakings which maintain alignment with the international standards for the listed proper shipping names, hazard classes, packing groups, special provisions, and vessel stowage requirements. PHMSA did not receive any adverse comments to this proposed amendments, and is adopting the revision of special provision 138 specified in § 172.102 as proposed in the NPRM.

Shipping Paper Requirements for Rail Shipments of Residues

On December 29, 2006, PHMSA published a final rule under PHMSA–06–25476 (HM–215I) [71 FR 78595] that permitted the continued use, for domestic shipments, of either one of two shipping description sequences in effect in the HMR on December 31, 2006, until January 1, 2013. Specifically, the HMR authorize the basic description of a hazardous material to consist of either the identification number first, followed by the proper shipping name, hazard class, and packing group, or as an alternative description sequence, the proper shipping name, hazard class, ID number and packing group. In addition, the basic description described above and specified in paragraphs § 172.202(a)(1)-(4) must be shown in the sequences described with no additional information interspersed. After January 1, 2013, only the basic shipping description sequence consisting of the identification number first, followed by the proper shipping name, hazard class, and packing group (in that order) is authorized.

However, § 172.203 provides allowances for a shipping paper to contain information in addition to the basic shipping description specified in § 172.202. Specifically, § 172.203(e)(1) permits that the shipping paper for a packaging containing the residue of a hazardous material may include the words ''RESIDUE: LAST CONTAINED * * *'' in association with the basic description of the hazardous material last contained in the packaging. Further, the shipping papers for tank cars containing the residue of a hazardous material must include the phrase, ''RESIDUE: LAST CONTAINED * * *'' before the basic description. While the HMR provide a general provision, various international standards provide more specific guidance on the location of this phrase. Currently, the ICAO TI, IMDG Code, and UN Model Regulations require this phrase, if used, to be placed either before or after the basic shipping description.

In the NPRM published on April 26, 2012, PHMSA proposed to revise § 172.203(e)(1) to permit the shipping paper for a packaging containing the residue of a hazardous material to include the words ''RESIDUE: LAST CONTAINED * * *'' before or after the basic shipping description of the hazardous material last contained in the packaging. PHMSA also proposed to remove the language ''in association with'' and replace it with the language ''before or after'' to align with various international standards. This proposed revision would harmonize the HMR with the ICAO TI, IMDG Code and UN Model Regulations.

For rail shipments of tank cars, § 172.203(e)(2) requires that the description on the shipping paper for a tank car containing the residue of a hazardous material must include the phrase, ''RESIDUE: LAST CONTAINED * * *'' before the basic description. Prior to the publication of the HM–215I final rule, the proper shipping name was the first piece of information required in the basic shipping description, and therefore, the phrase, ''RESIDUE: LAST CONTAINED * * *'' preceded the proper shipping name.

Effective January 1, 2013, rail shipments coming from Canada to the United States will be unable to comply with both the current requirements in the HMR for rail tank cars and the Transportation of Dangerous Goods (TDG) requirements. As stated above, after January 1, 2013, the proper shipping name will no longer be permitted to be the first piece of shipping information in the basic shipping description. Subsequently, the phrase, ''RESIDUE: LAST CONTAINED * * *'' will no longer immediately precede the proper shipping name. Furthermore the phrase, ''RESIDUE: LAST CONTAINED * * *'' may not be inserted into the basic description, as § 172.202(b) specifies the basic shipping description may not contain any additional information interspersed in the sequence described in § 172.202(a). Canada's TDG regulations currently permit a residue of hazardous material to be described as ''Residue—Last Contained'' or ''Résidu—dernier contenu,'' followed by the shipping name of the dangerous goods last contained in the means of containment.

To address this issue, in the April 26, 2012 NPRM, PHMSA proposed to revise § 172.203(e)(2) to require the description on the shipping paper for a tank car containing the residue of a hazardous material to include the phrase, ''RESIDUE: LAST CONTAINED * * *'' before or after the basic shipping description, or immediately preceding the proper shipping name.

PHMSA received one comment on this proposed amendment. IVODGA welcomes the amendment and notes that an equivalent international standard of the IMDG Code Amendment 35–10, section 5.4.1.4.3.2 requires empty uncleaned packagings, IBCs, bulk containers, portable tanks, road tank vehicles and railway tank wagons that contain the residue of dangerous goods other than Class 7 to be described by entering the words ''empty uncleaned'' or ''residue last contained'' before or after the required basic description. IVOGDA acknowledges that § 171.22 already authorizes the offering for transportation and transporting hazardous materials in accordance with the IMDG Code. However, it also notes that the inconsistency of the terminology used on shipping documents and the sequence of information is an issue for trans-modal shipments. To further harmonize the HMR with the UN Model Regulations as adopted in the IMDG Code as well as other modal specific codes, in addition to the amendments proposed in the April 26, 2012 NPRM, IVODGA suggests that PHMSA consider revising the proposed text to permit the use of either term ''empty uncleaned'' or ''residue last contained'' as either option adequately communicates the hazard.

PHMSA appreciates IVODGA's support of this amendment as well as its clarifying suggestion with regard to the shipping paper requirements for empty packagings. As IVOGDA correctly acknowledges, § 171.22 already authorizes the offering for transportation and transporting hazardous materials in accordance with the IMDG Code and thus the use of the term ''empty unclean.'' As the proposals in the April 26, 2012 NPRM did not specifically address the language ''empty uncleaned'' and the HMR currently permits the use of a shipping paper in accordance with the IMDG code under § 171.22, PHMSA will not specifically add the term ''empty uncleaned'' to §§ 172.203(e)(1) and 172.203(e)(2). We are, however, adopting the amendments

to §§ 172.203(e)(1) and 172.203(e)(2) as proposed in the NPRM.

Training Record Requirements

The requirements for hazardous materials training are specified in § 172.704. This section includes a description of the applicability for hazardous materials training, the necessary components of a training program, and the recurrent training and recordkeeping requirements.

Currently, 49 CFR part 172, subpart I describes the requirements for security plans. Specifically, §§ 172.802(d) and 172.820(i)(1) require that a copy of the security plan must be maintained and that security plan documentation be made available upon request, at a reasonable time and location, to an authorized official of the Department of Transportation (DOT) or the Department of Homeland Security (DHS).

Similar to the security plan requirements, the training requirements include a recordkeeping component. Specifically, as specified in § 172.704(d), a record of current training, inclusive of the preceding three years, must be created and retained by each hazmat employer for as long as that employee is employed by that employer as a hazmat employee and for 90 days thereafter. However, unlike the security plan documentation, the HMR currently do not stipulate that the training records must be made available upon request to authorized officials of the DOT or DHS.

The Federal hazardous materials transportation law (Federal hazmat law, 49 U.S.C. 5101 *et seq.*) authorizes the Secretary of Transportation to prescribe regulations for the safe transportation of hazardous material in intrastate, interstate, and foreign commerce. The Secretary has delegated this authority to PHMSA. Authority to enforce the HMR has been delegated to the Federal Aviation Administration ''with particular emphasis on the transportation or shipment of hazardous materials by air;'' the Federal Railroad Administration ''with particular emphasis on the transportation or shipment of hazardous materials by railroad;'' PHMSA ''with particular emphasis on the shipment of hazardous materials and the manufacture, fabrication, marking, maintenance, reconditioning, repair or test of multi-modal containers that are represented, marked, certified, or sold for use in the transportation of hazardous materials;'' and the Federal Motor Carrier Safety Administration ''with particular emphasis on the transportation or shipment of hazardous materials by highway'' (CFR part 1, subpart C). In addition, as provided in the Homeland Security Act and as defined in a Memorandum of Agreement between the DHS and the DOT, the United States Coast Guard (USCG) retained the ability to enforce the HMR with particular emphasis on the transportation or shipment of hazardous materials by vessel. Thus, enforcement of the HMR, including the training regulations, is shared among the DOT operating administrations, USCG and DHS, with each placing particular emphasis on their respective authorities.

Federal hazmat law, 49 U.S.C. 5121(b)(2), states that a person subject to this law shall make the records, property, reports, and information available for inspection when the Secretary undertakes an investigation or makes a request. The completion of training in accordance with Subpart H of Part 172 is essential for hazmat employees handling hazardous materials and ensures proper compliance with the HMR resulting in a greater level of safety. The recordkeeping requirements specified in § 172.704(d) allow for hazmat employers and PHMSA personnel to verify that only individuals knowledgeable in the applicable regulations are handling hazardous materials.

In the NPRM published on April 26, 2012, PHMSA proposed to revise § 172.704(d) to require that an employer must make hazmat employee training records required by Subpart H of Part 172 available upon request, at a reasonable time and location, to an authorized official of DOT or DHS.

PHMSA received five comments on these proposed amendments to the training record retention requirements specified in § 172.704(d). Specifically, ATA believes that the proposed record availability provision is too broad and should be limited only to those agencies charged with enforcing PHMSA's regulations in modal transportation. ATA notes multiple DHS agencies have a reason to access the security plans specified in §§ 172.802(d) and 172.820(i)(1). However, only one DHS agency, the USCG, has a responsibility for training records specified in § 172.704(d). As an alternative ATA suggests PHMSA amend the proposed changes to 172.704(d) by limiting the disclosure requirement to those agencies outside of the Department of Transportation (DOT) that are explicitly authorized by Congress to enforce hazmat training.

ATA states this limitation is appropriate for many reasons. First, it aligns authority with enforcement requirements. Only agencies with a responsibility to enforce training compliance have any need to determine that training requirements have been met. Other agencies should not be tempted by the authority to audit a transporter's records for purposes other than enforcing the HMR. Parallel to this, limiting the disclosure of this information to as few parties as is practicable represents proper government care for hazmat employees' personally identifying information. Federal law mandates that agencies take care to ensure that privacy is a paramount concern. Limiting access to only those agencies with an explicitly granted authority to enforce the HMR is in the spirit of such statutes.

In addition to the comments presented by ATA, IVODGA, DGAC, COSHTA and NTTC provided similar comments. All voiced general support for the proposal but note the language ''an authorized official of the Department of Homeland Security'' was too broad. IVODGA, DGAC, COSHTA, and NTTC all suggest the language be revised to indicate the USCG as the designated division of DHS with which training records must be presented upon request.

In addition to the comments above, IVODGA further asks PHMSA to consider electronic means of recordkeeping as alternatives to hard copy documents for the sake of time saving in producing records at the request of a duly authorized representative of the DOT or DHS as amended. As this proposal was not presented in the April 26, 2012 NPRM, it is considered beyond the scope of this rulemaking and will not be addressed in this final rule. However, it should be noted that PHMSA currently does not prohibit the use of electronic training records as § 172.704 does not specify the manner in which records must be maintained.

PHMSA agrees with the concerns raised by ATA, IVODGA, DGAC, COSHTA and NTTC regarding the availability of training records. Therefore, based on the comments received, in this final rule PHMSA is adopting the proposed amendments to the training record requirements specified in § 172.704(d) and will modify the text to replace the reference to an authorized official of ''the Department of Homeland Security'' with a reference to an authorized official ''of an entity explicitly granted authority to enforce the HMR.'' This will ensure that appropriate agencies, including the USCG, have access to the required training records, while limiting unnecessary review of training records and safeguarding personally identifying

information for members of the regulated community.

Dewar Flasks Transported as Materials of Trade

Section 173.6 specifies the exceptions for shipments of materials of trade. A material of trade, is defined in § 171.8 as ''a hazardous material, other than a hazardous waste, that is carried on a motor vehicle for the purpose of protecting the health and safety of the motor vehicle operator or passengers; for the purpose of supporting the operation or maintenance of a motor vehicle (including its auxiliary equipment); or by a private motor carrier (including vehicles operated by a rail carrier) in direct support of a principal business that is other than transportation by motor vehicle.'' Section 173.6 authorizes only specific hazard classes and quantities to use the materials of trade exception. A hazardous material that meets the definition of a material of trade and is transported by motor vehicle in conformance with § 173.6 is not subject to any other requirements of the HMR except for those explicitly set forth or referenced in § 173.6.

PHMSA recently received a request for a formal letter of interpretation pertaining to the application of the materials of trade exception (Reference No.: 10–0101). The letter expressed confusion and concern regarding whether the exception would apply to Division 2.1 and Division 2.2 compressed gas transported in Dewar flasks.

PHMSA acknowledged this requirement needs additional clarification, as we believe that increased clarity will help to ensure the intended application of the materials of trade exception. Therefore, in the NPRM, PHMSA proposed to modify § 173.6(a)(2) to clarify that Dewar flasks may be transported as materials of trade provided these materials meet all the requirements specified in § 173.6.

PHMSA received no comments on these proposed amendments to the materials of trade requirements specified in § 173.6(a)(2). Therefore, we are adopting these amendments as proposed.

Lab Packs Containing Temperature-Controlled Materials

Section 173.12 specifies the exceptions for shipment of waste materials including the requirements for waste packages known as ''lab packs.'' A lab pack, although not specifically defined in § 171.8, is considered a large outer packaging containing small inner packagings that are filled with various compatible laboratory hazardous wastes. In accordance with § 173.12, a lab pack is a combination packaging consisting of a glass inner packaging, not exceeding 4 L (1 gallon) rated capacity, or a metal or plastic inner packaging, not exceeding 20 L (5.3 gallons) rated capacity. Inner packagings containing liquid must be surrounded by a chemically compatible absorbent material in sufficient quantity to absorb the total liquid contents. These inner packagings are then further packed in specification outer packaging and the completed package must not exceed a gross weight of 205 kilograms. The requirements and regulatory relief provided for the transportation of waste hazardous materials under the lab pack exception are further specified in § 173.12(b) of the HMR.

On July 17, 2007, PHMSA published a request for comments regarding the conversion of special permits into the HMR in the **Federal Register** under Docket Number PHMSA–2007–27329 (HM–233A) [72 FR 388110] entitled, ''Hazardous Materials: Conversion of Special Permits into Regulations of General Applicability.'' In response to this notice PHMSA received comments requesting the incorporation of various special permits including special permit DOT SP–13192. Subsequently, PHMSA published in the **Federal Register** under Docket Number PHMSA–2009–27289 (HM–233A) [74 FR 68004] an NPRM entitled, ''Hazardous Materials: Incorporation of Special Permits Into Regulations'' proposing the incorporation of special permit DOT SP–13192. The lab pack requirements were then amended in a final rule published on May 14, 2010, in the **Federal Register** under Docket Number PHMSA–2009–0289 (HM–233A) [74 FR 53413] entitled, ''Hazardous Materials: Incorporation of Special Permits into Regulations.'' As part of these amendments, certain widely used and longstanding special permits, including special permit DOT SP–13192, were incorporated into the HMR. Specifically, the incorporation of this special permit authorized the transport of waste Division 4.2, Packing Group (PG) I material and Division 5.2 (organic peroxide) material in lab packs.

PHMSA recently received a request for a formal letter of interpretation pertaining to the recent changes of the lab pack exception (Reference No.: 10–0233). The writer expressed confusion and concern regarding whether the amendments of the HM–233A final rule authorized the transportation, as lab packs, of Division 4.1 and Division 5.2 materials that were also required to be temperature-controlled.

PHMSA acknowledged that this requirement needed additional clarification, as we believe that increased clarity will help to ensure that individuals transporting lab packs containing temperature-controlled materials are aware that such packagings are not excepted from other safety measures. Therefore, in the NPRM, PHMSA proposed to modify § 173.12 to clarify that temperature-controlled materials may be transported in lab packs provided these materials also meet the requirements in § 173.21(f)(1). PHMSA received one comment on this proposed amendment. Veolia commented that ''PHMSA's incorporation of the clarification to require shippers to also comply with operational controls for the transportation of temperature controlled materials in § 173.21(f)(1) is greatly appreciated.'' Veolia did however note that it has additional safety concerns involving the shipment of Division 5.2 materials under the lab pack exception stemming from the adoption of the amendments of HM–233A that it believes PHMSA should also address. These additional safety concerns related to the HM–233A final rule were beyond the scope of this rulemaking and thus not addressed in this final rule. Therefore, we are adopting as proposed the amendment to clarify that temperature-controlled materials may be transported in lab packs provided these materials also meet the requirements in § 173.21(f)(1).

Cargo Tank Motor Vehicles Self-Closing Stop Valves

Section 173.33 provides the requirements for hazardous materials transported in CTMVs. This section includes general requirements for CTMVs, as well as more specific requirements for loading, maximum lading pressure, relief systems, and closing valves.

Section 173.33(g) requires each liquid filling and liquid discharge line in a specification MC 338 cargo tank must be provided with a remotely-controlled internal self-closing stop valve except when the MC 338 cargo tank is used to transport argon, carbon dioxide, helium, krypton, neon, nitrogen, or xenon.

The discharge control device requirements for a MC 338 cargo tank are found in § 178.338–11(b) and state that each liquid filling and liquid discharge line must be provided with a shut-off valve located as close to the tank as practicable and, unless the valve is manually operable at the valve, the line must also have a manual shut-off valve.

PHMSA received a request for a formal letter of interpretation regarding the current requirements for MC 338 cargo tanks (Reference No.: 06–0243). According to the request, most vacuum insulated MC 338 cargo tanks operate at temperatures below the reliable operating temperature of available internal self-closing stop valves, and currently no manufacturer builds an internal self-closing stop valve that will operate reliably at temperatures that may reach minus 452 °F. The requestor asked if a MC 338 cargo tank is required to have a remotely-controlled internal self-closing stop valve as specified in § 173.33(g), provided an external stop valve is present in accordance with § 178.338–11(b).

PHMSA does not intend to require a remotely-controlled internal self-closing stop valve if the MC 338 cargo tank already uses an external self-closing stop valve to meet the requirements in § 178.338–11(b). Therefore, in the NPRM, we proposed to revise the provisions in § 173.33(g) to clarify this exception.

PHMSA received no comments on these proposed amendments to the requirements for CMTV Self-Closing Stop Valves specified in § 173.33(g), and are adopting these amendments as proposed.

Explosive Packaging Editorial Revision

Section 173.62 specifies packaging requirements for explosives. Specifically, § 173.62 provides a table that specifies the packaging instructions, and corresponding authorized inner, intermediate and outer packagings based on the assigned identification number of the explosive.

In a final rule published on September 13, 2011, under Docket Number PHMSA–2011–0134 (HM–244D) [76 FR 56304], entitled ''Minor Editorial Corrections and Clarifications,'' PHMSA revised § 173.62(c)(5) packaging instruction 130 to authorize the use of aluminum boxes (4B) and natural wood, sift-proof walls boxes (4C2). However, the following language was inadvertently removed from the first column of the packing instruction:

''2. Subject to approval by the Associate Administrator, large explosive articles, as part of their operational safety and suitability tests, subjected to testing that meets the intentions of Test Series 4 of the UN Manual of Tests and Criteria with successful test results, may be offered for transportation in accordance with the requirements of this subchapter.''

PHMSA did not intend to remove this portion of the packaging instruction and unnecessarily limit the transport of large explosive articles. Therefore, in the April 26, 2012 NPRM, PHMSA proposed to revise § 173.62(c)(5) packing instruction 130 to reinstate the language inadvertently removed from the first column of packing instruction 130.

PHMSA received no comments on these proposed amendments to the explosive packaging instruction 130 in § 173.62(c)(5). Therefore, we are adopting this amendment as proposed in the NPRM.

Exclusive Use Vehicles for Regulated Medical Waste (RMW)

Section 173.134 provides definitions and exceptions for infectious substances. Paragraph (c)(2) of this section requires a Regulated Medical Waste (RMW) that contains Category B cultures and stocks to be transported on a vehicle ''used exclusively'' to transport RMW. A Category B substance is defined as ''an infectious substance that is not in a form generally capable of causing permanent disability or life-threatening or fatal disease in otherwise healthy humans or animals when exposure to it occurs.''

As amended on July 20, 2011, in a final rule published under Docket Number PHMSA–2009–0151 (HM–218F) [76 FR 43510], entitled ''Miscellaneous Amendments,'' PHMSA revised § 173.134(c)(2) to incorporate the clarifications from a March 19, 2007 letter of interpretation (Ref. No. 07–0057). Specifically, PHMSA specified that the following materials may be transported on a vehicle used exclusively to transport RMW: (1) Plant and animal waste regulated by the Animal and Plant Health Inspection Service (APHIS); (2) waste pharmaceutical materials; (3) laboratory and recyclable wastes; (4) infectious substances that have been treated to eliminate or neutralize pathogens; (5) forensic materials being transported for final destruction; (6) rejected or recalled health care products; and (7) documents intended for destruction in accordance with Health Insurance Portability and Accountability Act of 1996 (HIPAA) requirements.

In response to the proposals in the HM–218F NPRM, Stericycle commented that the rationale underlying PHMSA's decision to authorize the transportation of multiple waste streams from medical facilities should also apply to other regulated activities, specifically to those covered under special permit DOT SP–13556, which authorizes the transportation of sharps in specialized containers. At the time of the July 20, 2011 final rule, PHMSA determined that incorporating special permit DOT SP–13556 into the HMR was beyond the scope of that rulemaking, but this issue would be addressed in a future NPRM. Therefore, in the NPRM published on April 26, 2012 PHMSA proposed to revise § 173.134(c)(2) to incorporate special permit DOT SP–13556 relating to the transport of regulated medical waste into the HMR.

PHMSA received one comment from Stericycle expressing full support for this proposal. Stericycle did not suggest edits to the regulatory text incorporating DOT–SP 13556. Therefore, we are adopting this amendment as proposed in the NPRM. Furthermore, we are reinstating the text previously adopted in the HM–218F final rule published under Docket Number PHMSA–2009–0151 (HM–218F) [76 FR 43510] as it was inadvertently deleted from the HMR.

However, Stericycle did express its belief that the definition of sharps specified in § 173.134 (a)(6) should be amended to include unbroken glass contaminated with a pathogen or that could become contaminated with a pathogen so the regulated community has a better understanding of the definition of sharps. Although PHMSA agrees that a clarification of the definition of ''sharps'' may assist the regulated community in understanding the applicable requirements, such a revision is beyond the scope of the original proposed amendments and will not be addressed in this final rule.

Alcoholic Beverages Exception

Section 173.150 provides exceptions from the HMR for certain Class 3 flammable liquid material. Specifically, § 173.150(d) provides exceptions for alcoholic beverages for all modes of transport. An alcoholic beverage (wine and distilled spirits as defined in 27 CFR 4.10 and 5.11) that meets one of three conditions specified in § 173.150(d) is not subject to the requirements of the HMR for a Class 3 flammable liquid material. These conditions include; (1) Containing 24 percent or less alcohol by volume; (2) being packaged in an inner packaging of 5 L (1.3 gallons) or less, and for transportation on passenger-carrying aircraft conforming to § 175.10(a)(4) as checked or carry-on baggage; or (3) for a Packing Group III alcoholic beverage being packaged in a packaging of 250 L (66 gallons) or less, unless transported by air.

Currently, the ICAO TI provide exceptions for alcoholic beverages transported via aircraft in Chapter 3; 3.1.1, Table 3–2, special provision A9 and Chapter 8; 8.1.2 paragraph (l). Specifically, Chapter 3; 3.1.1 Table 3–2 special provision A9 states that

alcoholic beverages containing not more than 70 percent alcohol by volume, when packaged in receptacles of 5 liters of less are not subject to the ICAO TI when carried as cargo. In addition, as specified in Chapter 8; 1.1.2 paragraph (l) of the ICAO TI, alcoholic beverages with less than 24 percent alcohol by volume or alcoholic beverages in retail packaging and alcoholic beverages containing more than 24 percent but not more than 70 percent alcohol by volume in receptacles not exceeding 5 liters are permitted to be carried by passengers or crew in carry-on or checked luggage and are not otherwise subject to the ICAO TI.

Generally, the HMR is harmonized with the ICAO TI with regard to the exceptions provided for alcoholic beverages shipped by passenger carrying and cargo aircraft. However, for cargo aircraft, the HMR does not align with the ICAO TI. For example, as specified in § 173.150(d), the HMR excepts alcoholic beverages in an inner packaging of 5 L (1.3 gallons) or less from regulation regardless of the alcohol percent on cargo aircraft. In contrast, the ICAO TI limits this exception to alcoholic beverages not exceeding 70 percent alcohol by volume. This lack of harmonization can lead to frustration of shipments of these types of materials in international air transport.

To address this issue, in the April 26, 2012 NPRM, PHMSA proposed to revise the exceptions in § 173.150(d) to harmonize the alcoholic beverages exception via aircraft with the requirements in the ICAO TI, and to restructure the exceptions in § 173.150(d) to provide clarity on the requirements for the transport of alcoholic beverages by each mode of transport including passenger carrying and cargo aircraft.

PHMSA received one comment on these proposed amendments. COSTHA strongly supports this and other international harmonization efforts. However, COSTHA believes the revisions to § 173.150, as proposed in the NPRM, prohibit the exception from being applied to alcohol shipped as cargo on passenger aircraft. The proposed text in § 173.150(d)(2)(iii) states alcoholic beverages transported aboard a cargo aircraft containing more than 24 percent but less than 70 percent alcohol by volume in an inner packaging of 5L (1.3 gallons) or less are not subject to the requirements of Subchapter C of the HMR. COSTHA notes that ICAO SP A9 states ''[a]lcoholic beverages containing not more than 70 per cent alcohol by volume, when packed in receptacles of 5 litres or less, are not subject to these instructions when carried as cargo.'' In the ICAO TI, the word 'cargo' does not mean cargo aircraft, but is defined in ICAO 3.1 as ''any property carried on an aircraft (passenger or cargo) other than mail and accompanied or mishandled baggage.'' Therefore in an effort to fully harmonize COSTHA recommends PHMSA modify the language in the proposed § 173.150(d)(2)(iii) to remove the word ''cargo'' before aircraft allowing harmonization with the ICAO TI for alcoholic beverages on aircraft, both passenger and cargo.

PHMSA appreciates COSTHA's comments and its general support for the amendments. On a passenger carrying aircraft an alcoholic beverage could be transported in three specific scenarios: (1) As carry-on baggage, (2) in checked baggage, or (3) as cargo. The language proposed in the NPRM addressed the first two of these transport scenarios but neglected to account for alcoholic beverages shipped as cargo aboard a passenger carrying aircraft. PHMSA did not intend to prohibit the alcoholic beverage exception from being applied to alcohol being shipped as cargo on passenger aircraft. PHMSA agrees with the statement that ICAO SP A9 states ''[a]lcoholic beverages containing not more than 70 per cent alcohol by volume, when packed in receptacles of 5 litres or less, are not subject to these instructions when carried as cargo'' regardless of whether it is a passenger carrying or cargo carrying aircraft. Therefore, we are revising the proposed language in § 173.150(d)(2)(iii) so that the exception for alcoholic beverages containing more than 24% but less than 70% alcohol by volume in an inner packaging not exceeding 5 L (1.3 gallons) may be transported as cargo aboard both passenger and cargo aircraft. We also note that when carried as cargo aboard a passenger carrying aircraft, the passenger provisions of § 175.10(a)(4) would no longer be applicable.

PHMSA is confident the revised text correctly reflects all transportation scenarios for alcoholic beverages and the exceptions provided for both passengers transporting alcoholic beverages via carry-on or checked baggage and transport of alcoholic beverages as cargo via cargo and passenger aircraft. Therefore, we are adopting these amendments as proposed in the NPRM, with the additional revision of § 173.150(d)(2)(iii).

Exceptions for Non-Spillable Batteries

Section 173.159 specifies requirements for the transportation of wet batteries, including non-spillable batteries. Additional exceptions for non-spillable batteries are specified in § 173.159a. If certain transport conditions specified in §§ 173.159 and 173.159a are met, such as specific packaging and securement requirements, non-spillable batteries are excepted from the HMR.

In a final rule published on January 14, 2009, under Docket Nos. PHMSA–2007–0065 (HM–224D) and PHMSA–2008–0005 (HM–215J) [74 FR 2200], entitled ''Hazardous Materials: Revision to Requirements for the Transportation of Batteries and Battery-Powered Devices; and Harmonization With the United Nations Recommendations, International Maritime Dangerous Goods Code, and International Civil Aviation Organization's Technical Instructions,'' PHMSA amended § 173.159(f) to describe the conditions under which a battery is considered ''non-spillable,'' and relocated the exceptions pertaining to non-spillable batteries from §§ 173.159(d) and 173.159(f), to a new § 173.159a.

However, when these exceptions were relocated, PHMSA inadvertently required that excepted non-spillable batteries must be securely packaged in strong outer packagings. This modification, in essence, prohibited excepted batteries from being palletized or placed on a skid. Therefore, in the NPRM published on April 26, 2012, PHMSA proposed to revise § 173.159a(c)(1) to except from the packaging requirements of § 173.159, non-spillable batteries that are secured to skids or pallets and capable of withstanding the shocks normally incident to transportation, provided the batteries meet the requirements of § 173.159(a) and are loaded or braced so as to prevent damage and short circuits in transit. Further, any other material loaded in the same vehicle must be blocked, braced, or otherwise secured to prevent contact with or damage to the batteries.

PHMSA received one comment on these proposed amendments to the exceptions for non-spillable batteries specified in § 173.159a(c)(1). IVODGA welcomes the clarification of the exceptions in § 173.159a for non-spillable batteries secured to skids or pallets which align the HMR with the requirements and exceptions within the IMDG Code and supports the ongoing efforts to reduce frustrated shipments in multi-modal commerce by international carriers such as the IVODGA membership.

However, IVODGA expresses confusion regarding the applicability of the incident reporting requirements to a shipment of batteries that meets the

exception provided in § 173.159a(d). To alleviate this perceived lack of clarity, IVODGA suggests PHMSA clarify the text in §§ 173.159a(b) and 173.159a(d) to specify whether the exception from incident reporting requirements is applicable.

Based on the current text ''are subject to the incident reporting requirements'' specified in § 173.159a(b) it is apparent that shipments complying with this section would be subject to the incident reporting requirements. Furthermore, § 173.159a(d) states that ''Non-spillable batteries are excepted from all other requirements of this subchapter when offered for transportation and transported in accordance'' with paragraph (c) and (d) of § 173.159a. The term ''excepted from all other requirements of this subchapter'' is used throughout the HMR to indicate that only the requirements of the paragraph in which that statement is included would apply. Paragraphs (c) and (d) of § 173.159a do not mention incident reporting requirements. Therefore, we believe it is clear that provided a shipment of non-spillable batteries meets the requirements of § 173.159a(c) and § 173.159a(d), which do not include the incident reporting requirements, it is not subject to any other requirements contained in the HMR; therefore, we are not adopting any additional suggested amendments to § 173.159a. Based on the foregoing, PHMSA is adopting the amendment to § 173.159a(c)(1), as proposed in the NPRM.

Cargo Tank Motor Vehicle Closures

Section 177.834 provides the general requirements for the loading and unloading of vehicles intended to transport hazardous materials via ground transportation. Paragraph (j) of this section requires CTMVs to be transported with all valves and other closures in liquid discharge systems to be closed and free of leaks unless transported in accordance with the requirements for empty packages specified in § 173.29(b)(2).

The provision specified in § 177.834(j) was added on May 30, 1996, in a final rule published under Docket Number HM–222B [61 FR 27166] to consolidate the closure requirements for cargo tanks transporting Class 3 (flammable liquid) materials, Class 8 (corrosive) materials, and Division 6.1 (poisonous) materials. This rule inadvertently overlooked the impact the closure requirement would have on MC 338 cargo tanks that transport cryogenic liquids. These tanks have external self-closing valves that are normally transported in an open position and are designed to close with a tremendous amount of force to ensure proper closure. Subsequently, these valves require a large amount of force and effort to open. As a result, the potential for physical injury to employee personnel is increased and the ability of the valve system to operate is potentially compromised as a result of repeated cycling (opening, closing, and testing).

In the NPRM published on April 26, 2012, PHMSA proposed to revise § 177.834(j) to permit external emergency self-closing valves on MC 338 cargo tanks containing residues of cryogenic liquids to remain either open or closed during transit.

PHMSA received no comments on these proposed amendments to the closure requirements for external emergency self-closing valves on MC 338 cargo tanks specified in § 177.834(j), and are adopting these amendments as proposed.

Cargo Tank Motor Vehicle (CTMV) Recordkeeping

Certain CTMVs require as part of their specification both a CTMV manufacturer's data report and a certificate stating that the completed CTMV conforms in all respects to the appropriate specification and the American Society of Mechanical Engineers (ASME) Code. Section 178.2(c)(1) currently excepts CTMVs that require a manufacturer's data report and certificate from the notification requirements. Specifically, § 178.2(c)(1) states that CMTV's in compliance with §§ 178.337–18 and 178.345–10 are excepted from the notification requirements specified in § 178.2(c)(1). The current reference to § 178.345–10 in § 178.2(c)(1) refers to pressure relief, not the CTMV manufacturer's data report and certificates for DOT 406, 407 and 412 (CTMVs), and is in error. The correct citation should read § 178.345–15, which refers to the manufacturer's data report and certification of DOT 406, 407 and 412 CMTVs. In addition, we also note that a reference to a MC 338 cargo tank manufacturer's data report certificate in § 178.338–19 is missing in § 178.2(c)(1).

Therefore, in the April 26, 2012 NPRM, PHMSA proposed to correct these errors and omissions by replacing the reference to § 178.345–10 with § 178.345–15 and adding a reference to § 178.338–19.

PHMSA received one positive comment and no negative comments on the proposed amendments to the recordkeeping requirements for CTMV specified in § 178.2(c)(1). DGAC supports such an amendment. This revision will increase compliance by revising incorrect citations and correcting unintended errors in the HMR. Therefore, we are adopting these clarifications as proposed in the NPRM.

Flame Penetration Resistance Test

Appendix E to Part 178 describes the Flame Penetration Resistance Test referenced throughout the HMR with regard to the outer packaging for chemical oxygen generators and cylinders containing compressed oxygen. This appendix specifies requirements for the Flame Penetration Resistance Test and includes criteria for acceptance of a passing test result, a summary of the test method and procedure, details on the preparation of test specimens, and construction and calibration specifications for the test equipment. The test procedure is described in section (g)(2) of this Appendix and references a ''Figure 1,'' However, the Figure 1 is omitted. In sections (d)(3) and (f)(2) of this Appendix, the design and calibration of the calorimeter is described and refers to a ''Figure 2,'' but Figure 2 is also omitted.

In the April 26, 2012 NPRM, PHMSA proposed to add Figures 1 and 2 that were referenced but inadvertently omitted from Appendix E.

PHMSA received no comments on the proposed addition of the figures inadvertently omitted in Appendix E to Part 178, and is adopting these amendments as proposed in the NPRM.

Discharge System Inspection and Maintenance Program

Section 180.416 details the requirements for a discharge system inspection and maintenance program for cargo tanks transporting liquefied compressed gases. Specifically, § 180.416 applies to operators using specification MC 330, MC 331, and non-specification cargo tanks authorized under § 173.315(k) for transportation of liquefied compressed gases other than carbon dioxide. As part of the discharge system inspection specified in this section, the operator must visually inspect each delivery hose assembly at least once each calendar month in which the delivery hose assembly is in service and keep a record of each inspection. In accordance with § 180.416(d), that record must include the inspection date, the name of the person performing the inspection, the hose assembly identification number, the company name, the date the hose was assembled and tested, and an indication that the delivery hose assembly and piping system passed or failed the tests and inspections.

There has been some confusion among the regulated community

pertaining to the requirement to include ''the company name'' in the record as specified in § 180.416(d). Specifically, there was concern over whether ''the company name'' refers to the name of the operator or the name of the manufacturer of the hose.

In the April 26, 2012 NPRM, PHMSA proposed to revise § 180.416(d) to clarify that the reference to the ''company name'' on the inspection record is the name of the hose manufacturer.

PHMSA received no comments on the proposed clarification of the discharge system inspection and maintenance program recordkeeping requirements specified in § 180.416(d), and is adopting these amendments as proposed.

C. Comments Beyond the Scope of This Rulemaking

In this section, PHMSA discusses the comments to the NPRM that provided suggestions for additional revisions that were not specifically proposed in the NPRM. Based on an assessment of the proposed changes and the comments received, PHMSA identified four comments that are beyond the scope of this rulemaking action. Specifically, these comments were submitted by Stericycle, IVODGA, Veolia, and Richard Zbilski. These comments pertain to a revision to the definition of sharps, electronic retention of training records, the lab pack revisions adopted into the HMR in a final rule entitled ''Hazardous Materials: Incorporation of Special Permits into Regulations'' under PHMSA–2009–0289 [70 FR 43638] (HM–233A) and published in the **Federal Register** on May 14, 2010, and the environmental impact of fireworks.

As these suggested amendments were not proposed in the NPRM and the regulated community was not given the opportunity to comment on these amendments, PHMSA is unable to address them in this final rule. If PHMSA chooses to pursue consideration of any of these comments, we will do so in a separate rulemaking. PHMSA appreciates Stericycle, IVODGA, Veolia, and Richard Zbilski bringing these issues to our attention and invites them to file petitions for rulemaking in accordance with § 106.95 including all information (see § 106.100) needed to support a petition if these commenters believe these amendments warrant rulemaking action. PHMSA briefly discusses these comments below.

Revision to the Definition of Sharps

In the April 26, 2012 NPRM, PHMSA proposed to incorporate special permit DOT SP–13556 into § 173.134, to authorize the transportation by motor vehicle of certain regulated medical wastes, designated as sharps, in non-DOT specification containers fitted into wheeled racks. In addition to its comments regarding the incorporation of this special permit DOT SP–13556, Stericycle also submitted a comment with regard to the definition of the term ''sharps'' as specified in § 173.134(a)(6). Stericycle stated that the definition of ''sharps'' should be amended to include ''unbroken glass contaminated with a pathogen or that could become contaminated with a pathogen so the regulated community has a better understanding of the definition of sharps.'' Although clarification of the definition of ''sharps'' may assist the regulated community in understanding the applicable requirements, PHMSA has determined that such an amendment is beyond the scope of the proposals presented in the April 26, 2012 NPRM and therefore will not be addressed in this final rule.

Electronic Retention of Training Records

In addition to its comments regarding the proposed revisions to the training record requirements specified in § 172.704(d), IVODGA also requested PHMSA ''consider electronic means of recordkeeping as alternatives to hard copy documents for the sake of time saving in producing records at the request of a duly authorized representative.'' As this specific amendment was not proposed in the April 26, 2012 NPRM, it is considered outside the scope of this rulemaking and will not be addressed in this final rule. It should be noted that PHMSA currently does not prohibit the use of electronic training records as § 172.704 does not specify the manner (i.e. paper or electronic) in which records must be kept.

Reconsideration of the Lab Pack Requirements Adopted Under HM–233A

In addition to its comments regarding the proposed revisions to the lab pack requirements specified in § 173.12, Veolia also requested that PHMSA reconsider amendments adopted in the HMR in a final rule entitled ''Hazardous Materials: Incorporation of Special Permits into Regulations'' under PHMSA–2009–0289 [75 FR 27205] (HM–233A) and published in the **Federal Register** on May 14, 2010. Specifically, Veolia requests PHMSA reconsider further amending the requirements for lab pack to address various safety concerns it claims have resulted from the adoption of the HM–233A final rule. Veolia is concerned that amendments adopted in HM–233A rulemaking will diminish the safety of the shipments of waste Division 5.2 materials for disposal by increasing the potential for misclassification of the hazardous materials by the shipper and allowing the use of a less rigorous packaging. Veolia's specific comments can be reviewed in the docket for this rulemaking. As the revisions to the lab pack requirements Veolia references were already proposed and offered for comment in the HM–233A NPRM and later addressed in the HM–233A final rulemaking, PHMSA does not intend to revisit them in this final rule.

PHMSA believes the additional comprehensive comments from Veolia would be more appropriately addressed in a separate rulemaking specific to lab pack requirements where they can be offered for comment from the regulated community prior to adoption. We appreciate Veolia bringing its safety concerns to our attention and encourage it to file a petition for rulemaking in accordance with § 106.95 including all information (see § 106.100) needed to support a petition if it believes these amendments warrant rulemaking action.

Fireworks Containing Sulfur

PHMSA received one comment from a concerned individual regarding the pollution resulting from the use of fireworks. Specifically, the commenter expresses concern about the amount and type of pollution emitted when using fireworks. The topic of fireworks was not addressed in the April 26, 2012 NPRM, and is therefore, beyond the scope of this rulemaking. It should be noted that PHMSA published in the **Federal Register** under Docket Number PHMSA–2010–0320 [74 FR 68004] (HM–257) an NPRM entitled, ''Hazardous Materials: Revision to Fireworks Approvals (RRR)'' that addresses fireworks-related issues. The docket for the fireworks rulemaking can be found at *http://www.regulations.gov* under PHMSA–2010–0320 (HM–257).

D. Provisions Not Adopted in This Final Rule and Discussion of Comments

In this section, PHMSA discusses the changes proposed in the NPRM and the comments received in response to the NPRM. Based on an assessment of the proposed changes and the comments received, PHMSA identified one provision that we are not adopting in this final rule. Specifically, PHMSA received considerable negative comments on the proposed revision to the closure notification requirements. Below is a summary of the amendment proposed, the comments received, and

PHMSA's rationale for not adopting this proposed amendment.

Closure Notification Requirements

Section 178.2 specifies the applicability of the requirements to specification packagings and the responsibilities of the manufacturer or other persons certifying compliance with the specification packaging requirements of Part 178. To achieve compliance with these requirements, the manufacturer or other person certifying compliance with the requirements of Part 178 must provide both notification to each person to whom a packaging is transferred of all requirements in Part 178 not met at the time of transfer, and applicable closure requirements for the packaging. These closure requirements include information specifying the type(s) and dimensions of the closures, including gaskets and any other components needed to ensure that the packaging is capable of successfully passing the applicable performance tests. This information must include any procedures to be followed, including closure instructions for inner packagings and receptacles, to effectively assemble and close the packaging for the purpose of preventing leakage in transportation. Closure instructions must provide for a consistent and repeatable means of closure that is sufficient to ensure the packaging is closed in the same manner as it was tested.

In April 2006, PHMSA received a request (Reference No.: 06–0123) for a letter of interpretation seeking clarification of the closure notification requirements specified in § 178.2(c) for ''packages'' containing residues. This letter was submitted to PHMSA requesting additional clarification on two previously issued letters of interpretation (Reference Numbers 05–0015 and 05–0265) which also addressed the topic of closure requirements with regard to ''packaging'' and ''packages.'' In response to Reference No. 06–0123, PHMSA indicated that ''packages'' containing residues must meet the notification requirements of § 178.2(c) and that we would clarify this issue in a future rulemaking.

In the April 26, 2012 NPRM, PHMSA addressed this need for clarification by proposing to revise § 178.2(c) to specify that the notification requirements apply to a packaging containing a residue of a hazardous materials unless the packaging of hazardous materials meets the exceptions provided in § 173.29(b).

PHMSA received seven comments on these proposed amendments from ACA, AHS, DGAC, NACD, RIPA, USWA and Veolia. All of the comments were extensive and strongly opposed to the amendment proposed. The commenters addressed topics related to the proposed amendments such as the intent and applicability of § 178.2(c); impact on re-conditioners, recyclers and re-users of packagings; information collection burden; economic implications, and the safety benefit, or lack thereof. PHMSA appreciates this feedback and an overview of these comments is provided below. The complete list of comments pertaining to this amendment is available in the docket for this rulemaking.

Several commenters disagree with the proposed amendments to the closure notification requirements stating that the changes did not reflect the initial intent and applicability of § 178.2(c). DGAC, whose membership includes virtually all sectors of the hazmat transportation industry, correctly noted that the term ''packaging'' as defined in § 171.8 and used in part 178 of the HMR refers only to receptacles that do not contain hazardous material. Subsequently, § 178.2(c) would apply to individuals moving ''packagings'' as defined in § 171.8, and not ''packages'' which would include packagings containing hazardous materials. DGAC also states that the term ''subsequent distributors,'' as used in § 178.2(c)(1), is limited to intermediaries between the packaging manufacturer and the hazmat offeror who fills the packaging with hazardous material. Likewise, ACA agrees that the requirements of § 178.2(c) apply to packaging manufacturers and those who perform functions described in Part 178; not subsequent transporters of previously filled packages.

Another commenter, AHS, notes that the closure requirements were originally intended to identify those tasks of a packaging manufacturer that had not been completed by that packaging manufacturer. Therefore, the filler would be aware that certain actions were still required to be completed to produce, what at the time, was DOT specification packaging (e.g. assembling and closing a knocked down fiberboard box). Furthermore, it is AHS's understanding that the primary intent of the requirement to ship an emptied package containing residue as if it were still full (See § 173.29) was to maintain the original hazard communications for the residues and not for the purposes of closure requirement notification of the packaging. AHS notes that the terms ''package'' and ''packaging'' are often incorrectly used interchangeably and suggests that this was the case in the letter of interpretation Reference No.: 06–0123 that precipitated the proposed amendment.

In addition to the concerns about the initial intent of § 178.2(c), all commenters on this amendment express concern regarding the vast impact such an amendment would have on the regulated community, specifically re-conditioners, recyclers and re-users of packagings. It was consistently noted that this amendment would fundamentally change the way hazardous materials packages are transported and have implications throughout the transportation chain.

Many commenters had concerns about the economic impact and an increase in information collection burden. While PHMSA originally perceived this amendment as a simple clarification of an existing requirement, many commenters noted that the revision would provide new requirements and thus impose a new economic and paperwork burden. DGAC notes that the cost of such a change would be significant and the economic evaluation provided in the April 26, 2012 NPRM fails to address the associated costs. Furthermore, DGAC notes this change would require information collection as the scope of those subject to the closure notification requirements would expand. This information collection was not addressed in the April 26, 2012 NPRM. ACA states this proposed requirement will add significant costs and complexity to compliance efforts for containers that are sent for reconditioning and reuse. AHS asks that full consideration be given to the economic and paperwork impact of requiring every shipper and re-shipper of a filled package to provide and retain closure instructions. NACD notes that the operational requirements could have substantial economic impacts on chemical distributors and customers and could:

> ''[E]asily result in tens of thousands of dollars of additional costs for a distributor, increasing with the number of shipments. Costs would be substantial for all distributors and would result primarily from mailing closure instructions to hundreds of customers and answering numerous calls for technical assistance from many of these customers.''

RIPA reiterates the above comments and notes that ''[r]equiring that reconditioners be provided notifications is a costly paperwork burden with no safety benefit of any kind.'' In addition to the cost of the proposed amendment, many commenters were concerned that no safety issue was identified to necessitate such a change. ACA notes

that while PHMSA indicates that this requirement will increase compliance, there is no indication in the NPRM that there are incidents involving container residues that stemmed from insufficient closure or any discussion of the risk posed by residue containers. ACA concludes that there does not appear to be a significant safety risk involved in the movement of these types of shipments.

AHS notes the difficulty of implementing such a requirement. It provides an example demonstrating this difficulty by noting that for UN 4G fiberboard cartons, small UN1A2 drums, and crimped lid or friction lid pails, there is no realistic method to re-close the outer receptacle, or to provide inner liners, cushioning material, etc., for a package that usually is being discarded or recycled. AHS requests PHMSA provide incident data to ascertain whether any record of safety problems involves emptied non-bulk packaging with closures in place but not secured in accordance with the original packaging manufacturer's instructions. NACD reiterates the above comments and states ''PHMSA does not provide evidence that leaking empty containers have been a safety problem.''

Based on the considerable feedback and a further consideration of the closure requirements in § 178.2(c), PHMSA is not adopting the amendment to the closure notification requirements as proposed in the April 26, 2012 NPRM or any amendments to the closure notification requirements.

After further review, and as noted by numerous commenters, PHMSA rationalizes that it is apparent that the applicability of § 178.2(c) is specific to ''packagings'' and not ''packages.'' As defined in § 171.8, a packaging ''means a receptacle and any other components or materials necessary for the receptacle to perform its containment function in conformance with the minimum packing requirements of this subchapter'' while a package ''means a packaging plus its contents.'' Furthermore, as many commenters note, PHMSA agrees that the term ''subsequent distributors'' as used in § 178.2(c)(1) is intended to address intermediaries between the manufacturer and the hazmat offeror who fills the packaging with hazardous material. It is apparent that the requirement to notify each person to whom the ''packaging'' is transferred is the responsibility of each subsequent ''packaging'' distributor, not each offeror of a ''package.''

Furthermore, as is evident from PHMSA's review of the information collection burden associated with the closure notification requirements, the population to which this regulation is intended to apply is restricted to packaging manufacturers and packaging distributors and not to the entirety of shippers and offerors of hazardous materials packages.

Based on the comments received, PHMSA will not be adopting any changes in the closure notification requirements specified in § 178.2(c). Subsequently, closure notification requirements would not be required to accompany a package containing a residue of a hazardous material that is transported for the purposes of re-conditioning, recycling or re-use. It was not PHMSA's intent to propose an amendment that would impose a significant additional economic and information collection burden on the regulated community. Furthermore, PHMSA did not intend to expand the applicability of § 178.2(c) beyond ''packagings'' to include ''packages.'' Rather, PHMSA's intention was to address an issue previously identified in a letter of interpretation. However, based on further review and the rationale presented by commenters, we are rescinding the letter of interpretation Reference No.: 06–0123 as the letter contains incorrect information. In addition, PHMSA is also rescinding letters of interpretation Reference Numbers 05–0015 and 05–0265 as they also contain misinformation. Finally, many commenters suggest a thorough economic and safety analysis be conducted before amendments similar to those proposed in § 178.2(c) for closure notification requirements are adopted. At this time, PHMSA does not foresee the need for such analysis as no amendments are being adopted.

III. Regulatory Analyses and Notices

A. Statutory/Legal Authority for This Rulemaking

This final rule is published under authority of Federal hazardous materials transportation law (Federal hazmat law; 49 U.S.C. 5101 et seq.). Section 5103(b) of Federal hazmat law authorizes the Secretary of Transportation to prescribe regulations for the safe transportation, including security, of hazardous materials in intrastate, interstate, and foreign commerce. This final rule makes miscellaneous amendments to the HMR. In addition, this final rule corrects errors in the hazardous materials table and corresponding special provisions, clarifies the requirements for lab packing temperature controlled materials and clarifies various cargo tank provisions and revises the training requirements to require that a hazmat employer must make hazmat employee training records available upon request to an authorized officials. These amendments clarify regulatory requirements and, where appropriate, decrease the regulatory burden without compromising the safe transportation of hazardous materials in commerce.

B. Executive Order 12866, Executive Order 13563 and DOT Regulatory Policies and Procedures

This final rule is not considered a significant regulatory action under section 3(f) of Executive Order 12866 and was not reviewed by the Office of Management and Budget (OMB). The final rule is not considered a significant rule under the Regulatory Policies and Procedures order issued by the Department of Transportation [44 FR 11034].

In this rulemaking, we amend miscellaneous provisions in the HMR to clarify the provisions and to relax overly burdensome requirements. PHMSA anticipates the amendments contained in this rule will have economic benefits to the regulated community. This final rule is designed to increase the clarity of the HMR, thereby increasing voluntary compliance while reducing compliance costs.

Executive Order 13563 is supplemental to and reaffirms the principles, structures, and definitions governing regulatory review that were established in Executive Order 12866 Regulatory Planning and Review of September 30, 1993. In addition, Executive Order 13563 specifically requires agencies to: (1) Involve the public in the regulatory process; (2) promote simplification and harmonization through interagency coordination; (3) identify and consider regulatory approaches that reduce burden and maintain flexibility; (4) ensure the objectivity of any scientific or technological information used to support regulatory action; and (5) consider how to best promote retrospective analysis to modify, streamline, expand, or repeal existing rules that are outmoded, ineffective, insufficient, or excessively burdensome.

In this final rule, PHMSA has involved the public in the regulatory process in a variety of ways. Specifically, in this rulemaking PHMSA is addressing issues and errors that were identified and tagged for future rulemaking consideration in letters of interpretation issued to the regulated community and through other correspondence with PHMSA stakeholders. In addition, PHMSA has responded to the TSI's request to incorporate a guidance document

designed to assist the sulfur industry in ensuring the safe transport of molten sulfur (P–1581). PHMSA asked for public comments based on the proposals in the NPRM and upon receipt of public comment, PHMSA has addressed all substantive comments in this rulemaking action.

The amendments in the final rule promote simplification and harmonization through interagency coordination. Specifically, in this final rule, PHMSA is simplifying the lab pack requirements, the hazardous materials table and special provisions and the requirements for cargo tank transportation. These revisions are expected to produce a safety benefit derived from the increased clarity and reduced ambiguity in the special provisions to the § 172.101 HMT, and the lab packaging and cargo tank requirements of the HMR. There are minimal additional costs. The clarity will result in net benefits.

This final rule also promotes harmonization with international standards, such as the IMDG Code, Canada's TDG requirements and the ICAO TI with regard to the handling of ''Lead compounds, soluble n.o.s.'' via vessel, rail shipments of residue between the United States and Canada and alcoholic beverages via aircraft.

These revisions to the § 172.101 HMT will eliminate errors in the § 172.101 HMT, reduce ambiguity, harmonize the HMR with international regulations, and improve clarity. Many of these revisions were brought to PHMSA's attention through letters of interpretation requested from the regulated community. Although these revisions are minor, they are expected to produce a safety benefit derived from the increased clarity and accuracy of the text in the § 172.101 HMT.

This final rule adopts amendments that reduce the regulatory burden on the regulated community, allows for flexibility in achieving compliance and maintains an appropriate level of safety. This final rule permits flexibility in achieving compliance when transporting cargo tanks while maintaining an appropriate level of safety. This final rule also incorporates a special permit DOT SP–13556 that has a strong record of safety. Incorporating this permit into the HMR will provide wider access to the benefits of the provisions granted in this special permit, therefore, fostering greater regulatory flexibility without compromising transportation safety.

A majority of the amendments adopted in this rulemaking are simple clarifications and did not require significant scientific or technological information. However, when necessary, PHMSA used scientific or technological information to support its regulatory action. Specifically, such data was considered when structuring alternatives on how to best deal with issues regarding the safe transport of cargo tanks and the transport of alcoholic beverages with greater than 70% alcohol by volume via cargo aircraft. This information was used in the evaluation of alternative proposals and ultimately this information determined how best to promote retrospective analysis to modify and streamline existing requirements that are outmoded, ineffective, insufficient, or excessively burdensome.

C. Executive Order 13132

This final rule was analyzed in accordance with the principles and criteria contained in Executive Order 13132 (''Federalism''). This final rule preempts state, local and Indian tribe requirements but does not adopt any regulation that has substantial direct effects on the states, the relationship between the national government and the states, or the distribution of power and responsibilities among the various levels of government. Therefore, the consultation and funding requirements of Executive Order 13132 do not apply.

The Federal hazardous material transportation law, 49 U.S.C. 5125(b)(1), contains an express preemption provision (49 U.S.C. 5125(b)) preempting state, local, and Indian tribe requirements on certain covered subjects. Covered subjects are:

(i) The designation, description, and classification of hazardous materials;

(ii) The packing, repacking, handling, labeling, marking, and placarding of hazardous materials;

(iii) The preparation, execution, and use of shipping documents related to hazardous materials and requirements related to the number, content, and placement of those documents;

(iv) The written notification, recording, and reporting of the unintentional release in transportation of hazardous materials; or

(v) The design, manufacture, fabrication, marking, maintenance, reconditioning, repair, or testing of a packaging or container that is represented, marked, certified, or sold as qualified for use in the transport of hazardous materials.

This final rule concerns the classification, packaging, and handling of hazardous materials, among other covered subjects and as adopted preempts any state, local, or Indian tribe requirements concerning these subjects unless the non-Federal requirements are ''substantively the same''(see 49 CFR 107.202(d) as the Federal requirements.)

Federal hazardous materials transportation law provides at 49 U.S.C. 5125(b)(2) that if PHMSA issues a regulation concerning any of the covered subjects, PHMSA must determine and publish in the **Federal Register** the effective date of Federal preemption. That effective date may not be earlier than the 90th day following the date of issuance of the final rule and not later than two years after the date of issuance. PHMSA proposes the effective date of federal preemption be 90 days from publication of this final rule in this matter in the **Federal Register**.

D. Executive Order 13175

This final rule has been analyzed in accordance with the principles and criteria contained in Executive Order 13175 (''Consultation and Coordination with Indian Tribal Governments''). Because this final rule does not have tribal implications and does not impose substantial direct compliance costs on Indian tribal governments, the funding and consultation requirements of Executive Order 13175 do not apply, and a tribal summary impact statement is not required.

E. Regulatory Flexibility Act, Executive Order 13272, and DOT Procedures and Policies

The Regulatory Flexibility Act (5 U.S.C. 601 *et seq.*) requires an agency to review regulations to assess their impact on small entities unless the agency determines the rule is not expected to have a significant impact on a substantial number of small entities. This final rule amends miscellaneous provisions in the HMR to clarify provisions based on PHMSA's initiatives and correspondence with the regulated community. While maintaining safety, it relaxes certain requirements that are overly burdensome. The changes are generally intended to provide relief to shippers, carriers, and packaging manufacturers, including small entities.

Consideration of alternative proposals for small businesses. The Regulatory Flexibility Act directs agencies to establish exceptions and differing compliance standards for small businesses, where it is possible to do so and still meet the objectives of applicable regulatory statutes. In the case of hazardous materials transportation, it is not possible to establish exceptions or differing standards and still accomplish our safety objectives.

The impact of this final rule is not expected to be significant. The

amendments are generally intended to provide relief to shippers, carriers, and packaging manufactures and testers, including small entities. This relief will provide marginal positive economic benefits to shippers, carriers, and packaging manufactures and testers, including small entities however; these benefits are not at a level that can be considered economically significant. Therefore, this final rule will not have a significant economic impact on a substantial number of small entities.

This final rule has been developed in accordance with Executive Order 13272 (''Proper Consideration of Small Entities in Agency Rulemaking'') and DOT's procedures and policies to promote compliance with the Regulatory Flexibility Act to ensure that potential impacts of draft rules on small entities are properly considered.

F. Paperwork Reduction Act

This final rule does not impose any new information collection requirements and in three instances marginally decreases the information collection burden on the regulated community. Specifically the following information collections affected by this rulemaking are:

- Office of Management and Budget (OMB) Control Number 2137–0051; Rulemaking and Special Permit Petitions: A slight reduction in information collection burden is anticipated due to the incorporation of a DOT SP–13556 into § 173.134. This permit will allow individuals more flexibility when transporting sharps and decrease the need for special permits applications when transporting sharps as regulated medical wastes.
- OMB Control Number 2137–0034; Hazardous Materials Shipping Papers and Emergency Response Information: A negligible reduction in information collection burden due to relaxation of the shipping paper description requirements for residues specified in § 172.203. Specifically, this will allow individuals more flexibility on the shipping paper descriptions when shipping waste internationally, and will correct a regulatory inconsistency between the HMR and Canadian Transportation of Dangerous Goods (TDG) regulations, fostering international transport of residues.
- OMB Control Number 2137–0557; Approvals for Hazardous Materials: A slight reduction in information collection burden is anticipated due to relaxation of approval submittal requirements specified in § 105.40. Specifically, this relaxation will permit individuals wishing to apply with PHMSA to be an approved designated agent to submit their applications either by standard mail or electronic mail. Currently, the HMR only permits submission through standard mail. This change will result in a decrease in duplicate hard copies submitted to PHMSA as well as a decrease in the processing time for such applications.
- Although no new training recordkeeping requirements are adopted in this final rule, a minimal increase in information collection burden may be realized due to increased awareness of the training requirements resulting from the modifications specified in § 172.704. However; in accordance with 49 U.S.C. 5107(g), training records are exempted from the requirements of the paperwork reduction act.

G. Regulation Identifier Number (RIN)

A regulation identifier number (RIN) is assigned to each regulatory action listed in the Unified Agenda of Federal Regulations. The Regulatory Information Service Center publishes the Unified Agenda in April and October of each year. The RIN number contained in the heading of this document can be used to cross-reference this action with the Unified Agenda.

H. Unfunded Mandates Reform Act

This final rule does not impose unfunded mandates under the Unfunded Mandates Reform Act of 1995. It does not result in costs of $141,300,000 or more to either state, local, or tribal governments, in the aggregate, or to the private sector, and is the least burdensome alternative that achieves the objective of the rule.

I. Environmental Assessment

The National Environmental Policy Act, 42 U.S.C. 4321–4375, requires federal agencies to analyze proposed actions to determine whether the action will have a significant impact on the human environment. The Council on Environmental Quality (CEQ) regulations require federal agencies to conduct an environmental review considering: (1) The need for the proposed action; (2) alternatives to the proposed action; (3) probable environmental impacts of the proposed action and alternatives; and (4) the agencies and persons consulted during the consideration process. PHMSA is adopting miscellaneous amendments to the HMR based on PHMSA's own initiatives including a review of the HMR, previous letters of interpretation and special permits we issued. These amendments are intended to update, clarify, or provide relief from certain existing regulatory requirements to promote safer transportation practices; eliminate unnecessary regulatory requirements; facilitate international commerce; and make these requirements easier to understand.

Description of Action

Docket No. PHMSA–2011–0138 (HM–218G), Final Rule

Transportation of hazardous materials in commerce is subject to requirements in the HMR, issued under authority of Federal hazardous materials transportation law, codified at 49 U.S.C. 5101 et seq. To facilitate the safe and efficient transportation of hazardous materials in international commerce, the HMR provide that both domestic and international shipments of hazardous materials may be offered for transportation and transported under provisions of the international regulations.

Adopted Amendments to the HMR

In this final rule, PHMSA is adopting amendments to:

- Permit designated agents for non-residents to submit designation requests by electronic mail in addition to traditional mail.
- Add the Sulphur Institute's (TSI) ''Molten Sulphur Rail Tank Car Guidance'' document to the list of informational materials not requiring incorporation by reference in § 171.7 (Responds to petition for rulemaking P–1581).
- Revise the § 172.101 Hazardous Materials Table (HMT) to correct an error in the transportation requirements for entries listed under the proper shipping name, ''Hydrazine Dicarbonic Acid Diazide.''
- Revise the § 172.101 HMT to remove the entry for ''Zinc ethyl, see Diethylzinc'' that was superseded by proper shipping names adopted in a previous rulemaking.
- Add the entries for ''Paint related material, flammable, corrosive *(including paint thinning or reducing compound)''* UN3469, PG II, and PG III to the § 172.101 HMT that were inadvertently omitted.
- Remove references to special provisions B72 and B74 in § 172.102.
- Revise special provision 138 in § 172.102 to clarify the lead solubility calculation used for classification of material as a Marine Pollutant.
- Revise the shipping paper requirements in § 172.203(e) to permit the phrase ''Residue last contained'' to be placed before or after the basic shipping description sequence, or for rail shipments, directly preceding the proper shipping name in the basic shipping description sequence.

• Update the training recordkeeping requirements in § 172.704 to specify that a hazardous materials (hazmat) employer must make hazmat employee training records available upon request, at a reasonable time and location, to an authorized official of the Department of Transportation or of an entity explicitly granted authority to enforce the HMR.

• Clarify that the materials of trade exception in § 173.6 may be used when transporting Division 2.1 and 2.2 gases in Dewar flasks.

• Clarify the lab pack provisions in § 173.12 pertaining to temperature-controlled materials contained in a lab pack.

• Clarify the exceptions for external emergency self-closing valves on CTMVs in § 173.33(g) to specify that external emergency self-closing valves on MC 338 cargo tanks containing cryogenic liquids may remain open during transportation.

• Correct an inadvertent deletion of the § 173.62 packaging requirements for explosives.

• Incorporate special permit DOT SP–13556 into § 173.134, to authorize the transportation by motor vehicle of certain regulated medical wastes, designated as sharps, in non-DOT specification containers fitted into wheeled racks.

• Revise the requirements for cargo air transport of alcoholic beverages § 173.150 to harmonize with the ICAO TI.

• Clarify the exceptions in § 173.159a for non-spillable batteries secured to skids or pallets.

• Revise § 178.2(c) to correct incorrect regulatory citations.

• Clarify the requirements for the Flame Penetration Resistance test required for chemical oxygen generators and certain compressed gases in Appendix E to Part 178.

• Clarify the inspection record requirements in § 180.416 for discharge systems of cargo tanks transporting liquefied compressed gases.

Alternatives Considered

Alternative (1)—No action alternative: Leave the HMR as is; do not adopt above-described amendments.

The HMR requires various updates and clarifications to correct certain omissions, and errors. This action also includes a few minor modifications to existing regulatory requirements. If PHMSA chose the no-action alternative, the public would not receive the benefit of the various updates, clarifications, and modifications to the HMR, which will provide information, enhance safety, and provide relief certain unnecessary requirements. Therefore, PHMSA rejected the do-nothing alternative.

Alternative (2)—Preferred Alternative: Go forward with the proposed amendments to the HMR in the NPRM, as described above.

Environmental Consequences

Hazardous materials are substances that may pose a threat to public safety or the environment during transportation because of their physical, chemical, or nuclear properties. The hazardous materials regulatory system is a risk management system that is prevention oriented and focused on identifying a safety hazard and reducing the probability and quantity of a hazardous material release. Hazardous materials are categorized by hazard analysis and experience into hazard classes and packing groups. The regulations require each shipper to classify a material in accordance with these hazard classes and packing groups. The process of classifying a hazardous material is itself a form of hazard analysis. Further, the regulations require the shipper to communicate a material's hazards through use of the hazard class, packing group, and proper shipping name on the shipping paper and the use of labels on packages and placards on transport vehicles. Thus, the shipping paper, labels, and placards communicate the most significant findings of the shipper's hazard analysis. A hazardous material is assigned to one of three packing groups based upon its degree of hazard, from a high hazard, Packing Group I to a low hazard, Packing Group III material. The quality, damage resistance, and performance standards of the packaging in each packing group are appropriate for the hazards of the material transported.

Under the HMR, hazardous materials are transported by aircraft, vessel, rail, and highway. The potential for environmental damage or contamination exists when packages of hazardous materials are involved in accidents or en route incidents resulting from cargo shifts, valve failures, package failures, loading, unloading, collisions, handling problems, or deliberate sabotage. The release of hazardous materials can cause human death or injury, the loss of ecological resources (e.g. wildlife habitats), and the contamination of air, aquatic environments, and soil. Contamination of soil can lead to the contamination of ground water. Compliance with the HMR substantially reduces the possibility of accidental release of hazardous materials.

When developing potential regulatory requirements, PHMSA evaluates those requirements to consider the environmental impact of each amendment. Specifically, PHMSA evaluates the: risk of release and resulting environmental impact; risk to human safety, including any risk to first responders; longevity of the packaging; and if the proposed regulation would be carried out in a defined geographic area, the resources, especially any sensitive areas, and how they could be impacted by any proposed regulations.

Of the regulatory changes adopted in this rulemaking, ten have been determined to be editorial. As such, these amendments have no impact on: the risk of release and resulting environmental impact; human safety; longevity of the packaging; and none of these amendments would be carried out in a defined geographic area. These editorial amendments are as follows:

• Revise the § 172.101 Hazardous Materials Table (HMT) to correct an error in the transportation requirements for entries listed under the proper shipping name, ''Hydrazine Dicarbonic Acid Diazide.''

• Revise the § 172.101 HMT to remove the entry for ''Zinc ethyl, see Diethylzinc'' that was superseded by proper shipping names adopted in a previous rulemaking.

• Re-insert the entries for ''Paint related material, flammable, corrosive *(including paint thinning or reducing compound)''* UN3469, PG II, and PG III in the § 172.101 HMT that were inadvertently omitted.

• Remove references to special provisions B72 and B74 in § 172.102.

• Revise special provision 138 in § 172.102 to clarify the lead solubility calculation used for classification of material as a Marine Pollutant.

• Correct an inadvertent deletion of the § 173.62 packaging requirements for explosives.

• Clarify the exceptions in § 173.159a for non-spillable batteries secured to skids or pallets.

• Revise § 178.2(c) to correct erroneous regulatory citations.

• Clarify the requirements for the Flame Penetration Resistance test specified for chemical oxygen generators and certain compressed gases in Appendix E to Part 178.

• Clarify the inspection record requirements in § 180.416 for discharge systems of cargo tanks transporting liquefied compressed gases.

The remaining non-editorial amendments are discussed in further detail and evaluated based on their overall environmental impact as follows:

• The requirement to permit designated agents for non-residents to

submit designation requests by electronic mail in addition to traditional mail does not impact positively or negatively on the risk of release, risk to human safety, or longevity of the packaging as the requirements of the special permit are designed to provide an equivalent level of safety to current regulatory requirements. Furthermore, this requirement would not be carried out in a defined geographic area including any sensitive areas.

• The adoption of the Sulphur Institute's (TSI) ''Molten Sulphur Rail Tank Car Guidance'' document to the list of informational materials not requiring incorporation by reference in § 171.7 makes this document a reference material only and thus would only have a minimal impact. Specifically, complying with this document will limit the obstruction of valuable tank car markings, labels, and stencils as well as tank car safety appliance features such as ladders, which may result in a minimal positive impact with regard to the risk of release and risk to human safety. PHMSA acknowledges that the presence of minimal amounts of residue on the outside of a rail tank car results in the emission of small amounts of H_2S, SO_2, and SO_3. However, the presence of this residue is a longstanding occurrence related to the shipment of molten sulfur and not related to or caused by this rulemaking. The adoption or recognition of the ''Molten Sulfphur Rail Tank Car Guidance'' document seeks to decrease any minimal amount of risk caused by this residue. This guidance document may also have an impact on tank car cleanliness which may result in increased longevity of the packaging. In addition, this guidance document could be carried out throughout the country, and is not thought to be specific to defined geographic area that includes any sensitive areas.

• The revision of the shipping paper requirements in § 172.203(e) to permit the phrase ''Residue last contained'' to be placed before or after the basic shipping description sequence, or for rail shipments, directly preceding the proper shipping name in the basic shipping description sequence may have a minimal positive environmental impact. This impact would result from the diminished amount of delayed shipments between the United States and Canada and thus could diminish the risk of release, and risk to human safety. PHMSA does not anticipate that this amendment will affect the longevity of the packaging.

• PHMSA does not anticipate the requirement to update the training recordkeeping requirements in § 172.704 to specify that a hazmat employer must make hazmat employee training records available upon request to an authorized official of the Department of Transportation or of an entity explicitly granted authority to enforce the HMR will have any environmental impacts. PHMSA views this amendment as procedural and thus would have no impact on the risk of release, risk to human safety, or longevity of the package. Furthermore, this requirement would not be carried out in a defined geographic area including any sensitive areas.

• The amendment to permit Division 2.1 and 2.2 gases in Dewar flasks to use the Material of Trade exception specified in § 173.6 does not provide any new regulatory requirement; it simply clarifies PHMSA's interpretation of the applicability of the section. Therefore, this amendment is a clarification and thus would have no impact on the risk of release, risk to human safety, or longevity of the package. Furthermore, this requirement would not be carried out in a defined geographic area including any sensitive areas.

• The amendment that clarifies that temperature-controlled materials meeting the lab pack requirements in § 173.12 must also comply with § 173.21(f)(1) may have a small positive environmental impact. Specifically, this amendment could provide valuable guidance that could eliminate the inclusion of incompatible materials in a lab pack and thus, lessen the risk of a release and risk to human safety. This amendment will have no impact on the longevity of the package. Furthermore, this requirement would not be carried out in a defined geographic area including any sensitive areas.

• The amendment that clarifies the exceptions for external emergency self-closing valves on CTMVs in § 173.33(g) to specify that external emergency self-closing valves on MC 338 cargo tanks containing cryogenic liquids may remain open during transportation may have a slight impact on the longevity of the CTMV closing valves. Limiting the closure of these valves could eliminate some deterioration and extend the lifespan of these CTMV valves. PHMSA also anticipates a positive impact on risk to human safety. These valves are designed to close with a tremendous amount of force to ensure proper closure. Subsequently, these valves require a large amount of force and effort to open. As a result, the potential for physical injury to employee personnel is increased and the ability of the valve system to operate is potentially compromised as a result of repeated cycling (opening, closing, and testing). PHMSA does not anticipate any impacts on the risk of release. Furthermore, this requirement would not be carried out in a defined geographic area including any sensitive areas.

• The incorporation of special permit DOT SP–13556 into § 173.134, to authorize the transportation by motor vehicle of certain regulated medical wastes, designated as sharps, in non-DOT specification containers fitted into wheeled racks should have no environmental impact. As special permits are designed to provide an equivalent level of safety to current regulatory requirements PHMSA anticipates no impact on the risk of release, risk to human safety, or longevity of packaging. Furthermore, this requirement would not be carried out in a defined geographic area including any sensitive areas.

• The harmonization of the requirements for cargo air transport of alcoholic beverages specified in § 173.150 with the ICAO TI may have a minimal environmental impact. The international harmonization of hazardous materials regulations will discourage delayed shipments and thus could positively affect the risk of release, risk to human safety. PHMSA does not anticipate this amendment will affect the longevity of the packaging. Furthermore, this requirement would not be carried out in a defined geographic area including any sensitive areas.

Agencies Consulted

This final rule would affect some PHMSA stakeholders, including hazardous materials shippers and carriers by highway, rail, vessel, and aircraft, as well as package manufacturers and testers. PHMSA sought comment on the environmental assessment contained in the April 26, 2012, NPRM published under Docket PHMSA 2011–0138 [77 FR 24885] (HM–218G) however, PHMSA did not receive any comments on the environmental assessment contained in that rulemaking. In addition, PHMSA sought comment from the following Federal Agencies and modal partners:

• Department of Commerce
• Department of Homeland Security
• Department of Justice
• Environmental Protection Agency
• Health and Human Services
• National Institute of Science and Technology
• Occupational Safety and Health Administration
• Federal Aviation Administration

• Federal Motor Carrier Safety Administration
• Federal Railroad Administration

PHMSA did not receive any adverse comments on the amendments adopted in this final rule from these Federal Agencies.

Conclusion

PHMSA is adopting miscellaneous amendments to the HMR based on comments from the regulated community and PHMSA's own rulemaking initiatives. The amendments are intended to update, clarify, or provide relief from certain existing regulatory requirements to promote safer transportation practices; eliminate unnecessary regulatory requirements; facilitate international commerce; and make these requirements easier to understand. These clarifications of regulatory requirements will foster a greater level of compliance with the HMR and thus, diminished levels of hazardous materials transportation incidents affecting the health and safety of the environment. Therefore, PHMSA concludes that no significant environmental impact will result from this rule.

J. Privacy Act

Anyone is able to search the electronic form of any written communications and comments received into any of our dockets by the name of the individual submitting the document (or signing the document, if submitted on behalf of an association, business, labor union, etc.). You may review DOT's complete Privacy Act Statement in the **Federal Register** published on April 11, 2000 (65 FR 19477), which may be viewed at *http://www.gpo.gov/fdsys/pkg/FR–2000–04–11/pdf/00–8505.pdf*.

K. International Trade Analysis

The Trade Agreements Act of 1979 (Pub. L. 96–39), as amended by the Uruguay Round Agreements Act (Pub. L. 103–465), prohibits Federal agencies from establishing any standards or engaging in related activities that create unnecessary obstacles to the foreign commerce of the United States. Pursuant to these Acts, the establishment of standards are not considered unnecessary obstacles to the foreign commerce of the United States, so long as the standards have a legitimate domestic objective, such as the protection of safety, and do not operate in a manner that excludes imports that meet this objective. The statute also requires consideration of international standards and, where appropriate, that they be the basis for U.S. standards. PHMSA notes the purpose is to ensure the safety of the American public, and has assessed the effects of this rule to ensure that it does not exclude imports that meet this objective. As a result, this final rule is not considered as creating an unnecessary obstacle to foreign commerce.

List of Subjects

49 CFR Part 105

Administrative practice and procedure, Hazardous materials transportation, Penalties, Reporting and recordkeeping requirements.

49 CFR Part 171

Exports, Hazardous materials transportation, Hazardous waste, Imports, Incorporation by reference, Reporting and recordkeeping requirements.

49 CFR Part 172

Education, Hazardous materials transportation, Hazardous waste, Incorporation by Reference, Labeling, Markings, Packaging and containers, Reporting and recordkeeping requirements.

49 CFR Part 173

Hazardous materials transportation, Incorporation by Reference, Packaging and containers, Radioactive materials, Reporting and recordkeeping requirements, Uranium.

49 CFR Part 177

Hazardous materials transportation, Loading and Unloading, Segregation and Separation.

49 CFR Part 178

Hazardous materials transportation, Incorporation by reference, Motor vehicle safety, Packaging and containers, Reporting and recordkeeping requirements.

49 CFR Part 180

Hazardous materials transportation, Motor carriers, Motor vehicle safety, Packaging and containers, Railroad safety, Reporting and recordkeeping requirements.

In consideration of the foregoing, we are amending 49 CFR Chapter I as follows:

PART 105—HAZARDOUS MATERIALS PROGRAM PROCEDURES

■ 1. The authority citation for part 105 continues to read as follows:

Authority: 49 U.S.C. 5101–5127; 49 CFR 1.53.

■ 2. In § 105.40, paragraph (d) is revised to read as follows:

§ 105.40 Designated agents for non-residents.

* * * * *

(d) Each designation must be submitted to: Approvals and Permits Division, Pipeline and Hazardous Materials Safety Administration, Attn: PHH–30, U.S. Department of Transportation, East Building, 1200 New Jersey Avenue SE., Washington, DC 20590–0001 or by electronic mail to: *specialpermits@dot.gov* or *approvals@dot.gov* as appropriate.

* * * * *

PART 171—GENERAL INFORMATION, REGULATIONS, AND DEFINITIONS

■ 3. The authority citation for part 171 continues to read as follows:

Authority: 49 U.S.C. 5101–5128, 44701; 49 CFR 1.45 and 1.53; Pub. L. 101–410 section 4 (28 U.S.C. 2461 note); Pub. L. 104–134, section 31001.

■ 4. In § 171.7, in ''Table 1 to 49 CFR 171.7—Materials Not Incorporated by Reference'', the following entry is added in alphabetical order to read as follows:

§ 171.7 Reference material.

* * * * *

Source and name of material	49 CFR reference
* * * * * * *	
The Sulphur Institute, 1020 19th St. NW., Suite 520, Washington, DC 20036.	
Molten Sulphur Rail Tank Car Guidance document, November 2010	172.102
* * * * * * *	

* * * * *

PART 172—HAZARDOUS MATERIALS TABLE, SPECIAL PROVISIONS, HAZARDOUS MATERIALS COMMUNICATIONS, EMERGENCY RESPONSE INFORMATION, AND TRAINING REQUIREMENTS

■ 5. The authority citation for part 172 continues to read as follows:

Authority: 49 U.S.C. 5101–5128, 44701; 49 CFR 1.53.

■ 6. In § 172.101, the Hazardous Materials Table is amended by removing the entries under ''[REMOVE]'', by adding the entries under ''[ADD]'' in alphabetical order, and revising entries under ''[REVISE]'' to read as follows:

§ 172.101 Purpose and use of hazardous materials table.

* * * * *

§ 172.101—HAZARDOUS MATERIALS TABLE

Symbols	Hazardous materials descriptions and proper shipping names	Hazard class or division	Identification Nos.	PG	Label codes	Special provisions (§ 172.102)	(8) Packaging (§ 173.***)			(9) Quantity limitations		(10) Vessel stowage	
							Exceptions	Non-bulk	Bulk	Passenger aircraft/rail	Cargo aircraft only	Location	Other
(1)	(2)	(3)	(4)	(5)	(6)	(7)	(8A)	(8B)	(8C)	(9A)	(9B)	(10A)	(10B)
.....	[REMOVE].												
		*	*		*	*	*		*	*			
.....	Hydrazine dicarbonic acid diazide.	Forbidden.											
.....	.....	.....	II	8, 6.1	B16, B53, IB2, T7, TP2, TP13	None	202	243	Forbidden	30 L	D	40	II.
.....	.....	.....	III	8, 6.1	B16, B53, IB3, T4, TP1.	154	203	241	5 L	60 L	D	40	III.
		*	*		*	*	*		*	*			
.....	*Zinc ethyl,* see Diethylzinc.												
		*	*		*	*	*		*	*			
.....	[ADD].												
		*	*		*	*	*		*	*			
.....	Hydrazine dicarbonic acid diazide.	Forbidden.											
		*	*		*	*	*		*	*			
.....	Paint related material, flammable, corrosive *(including paint thinning or reducing compound).*	3	UN3469	II	3, 8	IB2, T7, TP2, TP8, TP28.	150	202	243	1 L	5 L	B	40.
.....	.....	.....	.....	III	3, 8	IB3, T4, TP1, TP29.	150	203	242	5 L	60 L	A	40.
		*	*		*	*	*		*	*			
.....	[REVISE].												
		*	*		*	*	*		*	*			
.....	tert-Butyl isocyanate	6.1	UN2484	I	6.1, 3	1, B9, B14, B30, T20, TP2, TP13, TP38, TP44.	None	226	244	Forbidden	Forbidden	D	40.
		*	*		*	*	*		*	*			
D	Ethyl phosphonothioic dichloride, anhydrous.	6.1	NA2927	I	6.1, 8	2, B9, B14, B32, T20, TP4, TP12, TP13, TP38, TP45.	None	227	244	Forbidden	Forbidden	D	40.
D	Ethyl phosphonous dichloride, anhydrous *pyrophoric liquid.*	6.1	NA2845	I	6.1, 4.2	2, B9, B14, B32, T20, TP4, TP12, TP13, TP38, TP45.	None	227	244	Forbidden	Forbidden	D	18.
D	Ethyl phosphorodichloridate.	6.1	NA2927	I	6.1, 8	2, B9, B14, B32, T20, TP4, TP12, TP13, TP38, TP45.	None	227	244	Forbidden	Forbidden	D	40.

§ 172.101—HAZARDOUS MATERIALS TABLE—Continued

Symbols	Hazardous materials descriptions and proper shipping names	Hazard class or division	Identification Nos.	PG	Label codes	Special provisions (§ 172.102)	(8) Packaging (§ 173.***)			(9) Quantity limitations		(10) Vessel stowage	
							Exceptions	Non-bulk	Bulk	Passenger aircraft/rail	Cargo aircraft only	Location	Other
(1)	(2)	(3)	(4)	(5)	(6)	(7)	(8A)	(8B)	(8C)	(9A)	(9B)	(10A)	(10B)
		*	*		*	*	*		*	*			
D	Methyl phosphonous dichloride, *pyrophoric liquid*.	6.1	NA2845	I	6.1, 4.2	2, B9, B14, B16, B32, T20, TP4, TP12, TP13, TP38, TP45.	None	227	244	Forbidden	Forbidden	D	18.
		*	*		*	*	*		*	*			
D	Sulfur, molten	9	NA2448	III	9	30,B13, IB3, R1, T1, TP3.	None	213	247	Forbidden	Forbidden	C	61.
I	Sulfur, molten	4.1	UN2448	III	4.1	30, B13, IB1, R1, T1, TP3.	None	213	247	Forbidden	Forbidden	C	74.
		*	*		*	*	*		*	*			
+	Sulfuric acid, fuming *with 30 percent or more free sulfur trioxide*.	8	UN1831	I	8, 6.1	2, B9, B14, B32, B77, B84, N34, T20, TP2, TP12, TP13.	None	227	244	Forbidden	Forbidden	C	14, 40.
		*	*		*	*	*		*	*			
G	Toxic by inhalation liquid, flammable, corrosive, n.o.s. *with an LC50 lower than or equal to 200 ml/m3 and saturated vapor concentration greater than or equal to 500 LC50*.	6.1	UN3488	I	6.1, 3, 8	1, B9, B14, B30, T22, TP2, TP13, TP27, TP38, TP44.	None	226	244	Forbidden	Forbidden	D	40, 125.
G	Toxic by inhalation liquid, flammable, corrosive, n.o.s. *with an LC50 lower than or equal to 1000 ml/m3 and saturated vapor concentration greater than or equal to 10 LC50*.	6.1	UN3489	I	6.1, 3, 8	2, B9, B14, B32, T20, TP2, TP13, TP27, TP38, TP45.	None	227	244	Forbidden	Forbidden	D	40, 125.
		*	*		*	*	*		*	*			
G	Toxic by inhalation liquid, water-reactive, flammable, n.o.s. *with an LC50 lower than or equal to 200 ml/m3 and saturated vapor concentration greater than or equal to 500 LC50*.	6.1	UN3490	I	6.1, 4.3, 3	1, B9, B14, B30, T22, TP2, TP13, TP27, TP38, TP44.	None	226	244	Forbidden	Forbidden	D	21, 28, 40, 49.

G	Toxic by inhalation liquid, water-reactive, flammable, n.o.s. *with an LC50 lower or equal to 1000 ml/m3 and saturated vapor concentration greater than or equal to 10 LC50*.	6.1	UN3491	I	6.1, 4.3, 3	2, B9, B14, B32, T20, TP2, TP13, TP27, TP38, TP45.	None	227	244	Forbidden	Forbidden	D	21, 28, 40, 49.
		*	*		*	*	*		*	*			

* * * * *

■ 7. In § 172.102, special provision 138 is revised in paragraph (c)(1) and paragraph (c)(6) is revised to read as follows:

§ 172.102 Special provisions.

* * * * *

(c) * * *

(1) * * *

138 This entry applies to lead compounds which, when mixed in a ratio of 1:1,000 with 0.07 M (Molar concentration) hydrochloric acid and stirred for one hour at a temperature of 23°C ± 2°C, exhibit a solubility of more than 5%. Lead compounds which, when mixed in a ratio of 1:1,000 with 0.07 M (Molar concentration) hydrochloric acid and stirred for one hour at a temperature of 23°C ± 2°C, exhibit a solubility of 5% or less are not subject to the requirements of this subchapter unless they meet criteria as another hazard class or division. Lead compounds that have a solubility of 5% or less in accordance with this special provision are not subject to the requirements of this subchapter that pertain to Marine Pollutants.

* * * * *

(6) *''R'' codes.* These provisions apply only to transportation by rail.

R1 A person who offers for transportation tank cars containing sulfur, molten or residue of sulfur, molten may reference the Sulfur Institute's, ''Molten Sulphur Rail Tank Car Guidance document'' (see § 171.7 of this subchapter) to identify tank cars that may pose a risk in transportation due to the accumulation of formed, solid sulfur on the outside of the tank.

* * * * *

■ 8. In § 172.203, paragraphs (e)(1) and (2) are revised to read as follows:

§ 172.203 Additional description requirements.

* * * * *

(e) * * *

(1) The description on the shipping paper for a packaging containing the residue of a hazardous material may include the words ''RESIDUE: Last Contained * * *'' immediately before or after the basic shipping description on the shipping paper.

(2) The description on the shipping paper for a tank car containing the residue of a hazardous material must include the phrase, ''RESIDUE: LAST CONTAINED * * *'' immediately before or after the basic shipping description or immediately preceding the proper shipping name of the material on the shipping paper.

* * * * *

■ 9. In § 172.704, paragraph (d) introductory text is revised to read as follows:

§ 172.704 Training requirements.

* * * * *

(d) *Recordkeeping.* Each hazmat employer must create and retain a record of current training of each hazmat employee, inclusive of the preceding three years, in accordance with this section for as long as that employee is employed by that employer as a hazmat employee and for 90 days thereafter. A hazmat employer must make a hazmat employee's record of current training available upon request, at a reasonable time and location, to an authorized official of the Department of Transportation or of an entity explicitly granted authority to enforce the HMR. The record must include:

* * * * *

PART 173—SHIPPERS—GENERAL REQUIREMENTS FOR SHIPMENTS AND PACKAGINGS

■ 10. The authority citation for part 173 continues to read as follows:

Authority: 49 U.S.C. 5101–5128, 44701; 49 CFR 1.45 and 1.53.

■ 11. In § 173.6, paragraph (a)(2) is revised to read as follows:

§ 173.6 Materials of trade exceptions.

* * * * *

(a) * * *

(2) A Division 2.1 or 2.2 material in a cylinder with a gross weight not over 100 kg (220 pounds), in a Dewar flask meeting the requirements of § 173.320, or a permanently mounted tank manufactured to the ASME Code of not more than 70 gallon water capacity for a non-liquefied Division 2.2 material with no subsidiary hazard.

* * * * *

■ 12. In § 173.12, paragraph (b)(3) is revised to read as follows:

§ 173.12 Exceptions for shipment of waste materials.

* * * * *

(b) * * *

(3) *Prohibited materials.* The following waste materials may not be packaged or described under the provisions of this paragraph (b): a material poisonous-by-inhalation, a temperature controlled material unless it complies with § 173.21(f)(1), a Division 6.1, Packing Group I material, chloric acid, and oleum (fuming sulfuric acid).

* * * * *

■ 13. In § 173.33, paragraph (g) is revised to read as follows:

§ 173.33 Hazardous materials in cargo tank motor vehicles.

* * * * *

(g) *Remote control of self-closing stop valves—MC 330, MC 331 and MC 338 cargo tanks.* Each liquid or vapor discharge opening in an MC 330 or MC 331 cargo tank and each liquid filling and liquid discharge line in an MC 338 cargo tank must be provided with a remotely controlled internal self-closing stop valve except when an MC 330 or MC 331 cargo tank is marked and used exclusively to transport carbon dioxide; an MC 338 is used to transport argon, carbon dioxide, helium, krypton, neon, nitrogen, or xenon; or an MC 338 utilizes an external self-closing stop valve to comply with the requirements in § 178.338–11(b). However, if the cargo tank motor vehicle was certified before January 1, 1995, this requirement is applicable only when an MC 330 or MC 331 cargo tank is used to transport a flammable liquid, flammable gas, hydrogen chloride (refrigerated liquid), or anhydrous ammonia; or when an MC 338 cargo tank is used to transport flammable ladings.

* * * * *

■ 14. In § 173.62, in paragraph (c)(5), in the Table of Packing Methods, Packing Instruction 130 is revised to read as follows:

§ 173.62 Specific packaging requirements for explosives.

* * * * *

(c) * * *

(5) * * *

TABLE OF PACKING METHODS

Packaging instruction	Inner packagings	Intermediate packagings	Outer packaging
*	*	*	*
130	Not necessary	Not necessary	Boxes.

TABLE OF PACKING METHODS—Continued

Packaging instruction	Inner packagings	Intermediate packagings	Outer packaging
Particular Packaging Requirements: 1. The following applies to UN 0006, 0009, 0010, 0015, 0016, 0018, 0019, 0034, 0035, 0038, 0039, 0048, 0056, 0137, 0138, 0168, 0169, 0171, 0181, 0182, 0183, 0186, 0221, 0238, 0243, 0244, 0245, 0246, 0254, 0280, 0281, 0286, 0287, 0297, 0299, 0300, 0301, 0303, 0321, 0328, 0329, 0344, 0345, 0346, 0347, 0362, 0363, 0370, 0412, 0424, 0425, 0434, 0435, 0436, 0437, 0438, 0451, 0459 and 0488. Large and robust explosives articles, normally intended for military use, without their means of initiation or with their means of initiation containing at least two effective protective features, may be carried unpackaged. When such articles have propelling charges or are self-propelled, their ignition systems must be protected against stimuli encountered during normal conditions of transport. A negative result in Test Series 4 on an unpackaged article indicates that the article can be considered for transport unpackaged. Such unpackaged articles may be fixed to cradles or contained in crates or other suitable handling devices. 2. Subject to approval by the Associate Administrator, large explosive articles, as part of their operational safety and suitability tests, subjected to testing that meets the intentions of Test Series 4 of the UN Manual of Tests and Criteria with successful test results, may be offered for transportation in accordance with the requirements of this subchapter.			Steel (4A). Aluminum (4B). Wood natural, ordinary (4C1). Wood natural, sift-proof walls (4C2). Plywood (4D). Reconstituted wood (4F). Fiberboard (4G). Plastics, expanded (4H1). Plastics, solid (4H2). Drums. Steel, removable head (1A2). Aluminum, removable head (1B2). Plywood (1D). Fiber (1G). Plastics, removable head (1H2). Large Packagings. Steel (50A). Aluminum (50B). Metal other than steel or aluminum (50N). Rigid plastics (50H). Natural wood (50C). Plywood (50D). Reconstituted wood (50F). Rigid fiberboard (50G).
* * * * * * *			

■ 15. In § 173.134, paragraph (c)(2) is revised to read as follows:

§ 173.134 Class 6, Division 6.2—Definitions and exceptions.

* * * * *

(c) * * *

(2) The following materials may be offered for transportation and transported as a regulated medical waste when packaged in a rigid non-bulk packaging conforming to the general packaging requirements of §§ 173.24 and 173.24a and packaging requirements specified in 29 CFR 1910.1030 and transported by a private or contract carrier in a vehicle used exclusively to transport regulated medical waste:

(i) Waste stock or culture of a Category B infectious substance;

(ii) Plant and animal waste regulated by the Animal and Plant Health Inspection Service (APHIS);

(iii) Waste pharmaceutical materials;

(iv) Laboratory and recyclable wastes;

(v) Infectious substances that have been treated to eliminate or neutralize pathogens;

(vi) Forensic materials being transported for final destruction;

(vii) Rejected or recalled health care products;

(viii) Documents intended for destruction in accordance with the Health Insurance Portability and Accountability Act of 1996 (HIPAA) requirements;

(ix) Medical or clinical equipment and laboratory products provided they are properly packaged and secured against exposure or contamination; or

(x) Sharps in sharp containers provided the containers are securely closed to prevent leaks or punctures; do not exceed 18 gallons capacity; registered under the Medical Device Regulations of FDA; made of puncture resistant plastic that meets ASTM Standard F2132–01, Standard Specification for Puncture Resistance of Materials Used in Containers for Discarded Medical Needles and Other Sharps; and are securely fitted into wheeled racks that hold them in an upright position. The wheeled racks must contain full rows of sharps containers secured in place by a moveable bar; and must be securely held in place on the motor vehicle by straps or load bars during transportation. No shelf in any wheeled rack may exceed the manufacturer's recommended load capacity.

* * * * *

■ 16. In § 173.150, paragraph (d) is revised to read as follows:

§ 173.150 Exceptions for Class 3 (flammable and combustible liquids).

* * * * *

(d) *Alcoholic beverages.* (1) An alcoholic beverage (wine and distilled spirits as defined in 27 CFR 4.10 and 5.11), when transported via motor vehicle, vessel, or rail, is not subject to the requirements of this subchapter if the alcoholic beverage:

(i) Contains 24 percent or less alcohol by volume;

(ii) Is contained in an inner packaging of 5 L (1.3 gallons) or less; or

(iii) Is a Packing Group III alcoholic beverage contained in a packaging 250 liters (66 gallons) or less;

(2) An alcoholic beverage (wine and distilled spirits as defined in 27 CFR 4.10 and 5.11), when transported via aircraft, is not subject to the requirements of this subchapter if the alcoholic beverage:

(i) Contains 24 percent or less alcohol by volume;

(ii) For transportation aboard a passenger-carrying aircraft, contains more than 24% but less than 70% alcohol by volume when in unopened retail packagings not exceeding 5 liters (1.3 gallons) carried in carry-on or checked baggage, with a total net quantity per person of 5 liters (1.3) gallons (See § 175.10(a)(4) of this subchapter); or

(iii) When carried as cargo, contains more than 24% but less than 70% alcohol by volume in an inner packaging not exceeding 5 L (1.3 gallons).

* * * * *

■ 17. In § 173.159a, paragraphs (c) introductory text and (c)(1) are revised to read as follows:

§ 173.159a Exceptions for non-spillable batteries.

* * * * *

(c) Non-spillable batteries are excepted from the packaging requirements of § 173.159 under the following conditions:

(1) Non-spillable batteries must be securely packed in strong outer packagings or secured to skids or pallets capable of withstanding the shocks normally incident to transportation. The batteries must meet the requirements of § 173.159(a), be loaded or braced so as to prevent damage and short circuits in transit, and any other material loaded in the same vehicle must be blocked, braced, or otherwise secured to prevent contact with or damage to the batteries. A non-spillable battery which is an integral part of and necessary for the operation of mechanical or electronic equipment must be securely fastened in the battery holder on the equipment.

* * * * *

PART 177—CARRIAGE BY PUBLIC HIGHWAY

■ 18. The authority citation for part 177 continues to read as follows:

Authority: 49 U.S.C. 5101–5127; 49 CFR 1.53.

■ 19. In § 177.834, paragraph (j)(2) is revised to read as follows:

§ 177.834 General requirements.

* * * * *

(j) * * *

(2) All valves and other closures in liquid discharge systems are closed and free of leaks, except external emergency self-closing valves on MC 338 cargo tanks containing the residue of cryogenic liquids may remain either open or closed during transit.

* * * * *

PART 178—SPECIFICATIONS FOR PACKAGINGS

■ 20. The authority citation for part 178 continues to read as follows:

Authority: 49 U.S.C. 5101–5128; 49 CFR 1.53.

■ 21. In § 178.2, paragraph (c)(1) introductory text is revised to read as follows:

§ 178.2 Applicability and responsibility.

* * * * *

(c) *Notification.* (1) Except as specifically provided in §§ 178.337–18, 178.338–19, and 178.345–15 of this part, the manufacturer or other person certifying compliance with the requirements of this part, and each subsequent distributor of that packaging must:

* * * * *

■ 22. In Appendix E to Part 178, Figure 1 and Figure 2 are added following the text to read as follows:

Appendix E to Part 178—Flame Penetration Resistance Test

* * * * *

Figure 1: Test Apparatus for Horizontal and Vertical Mounting

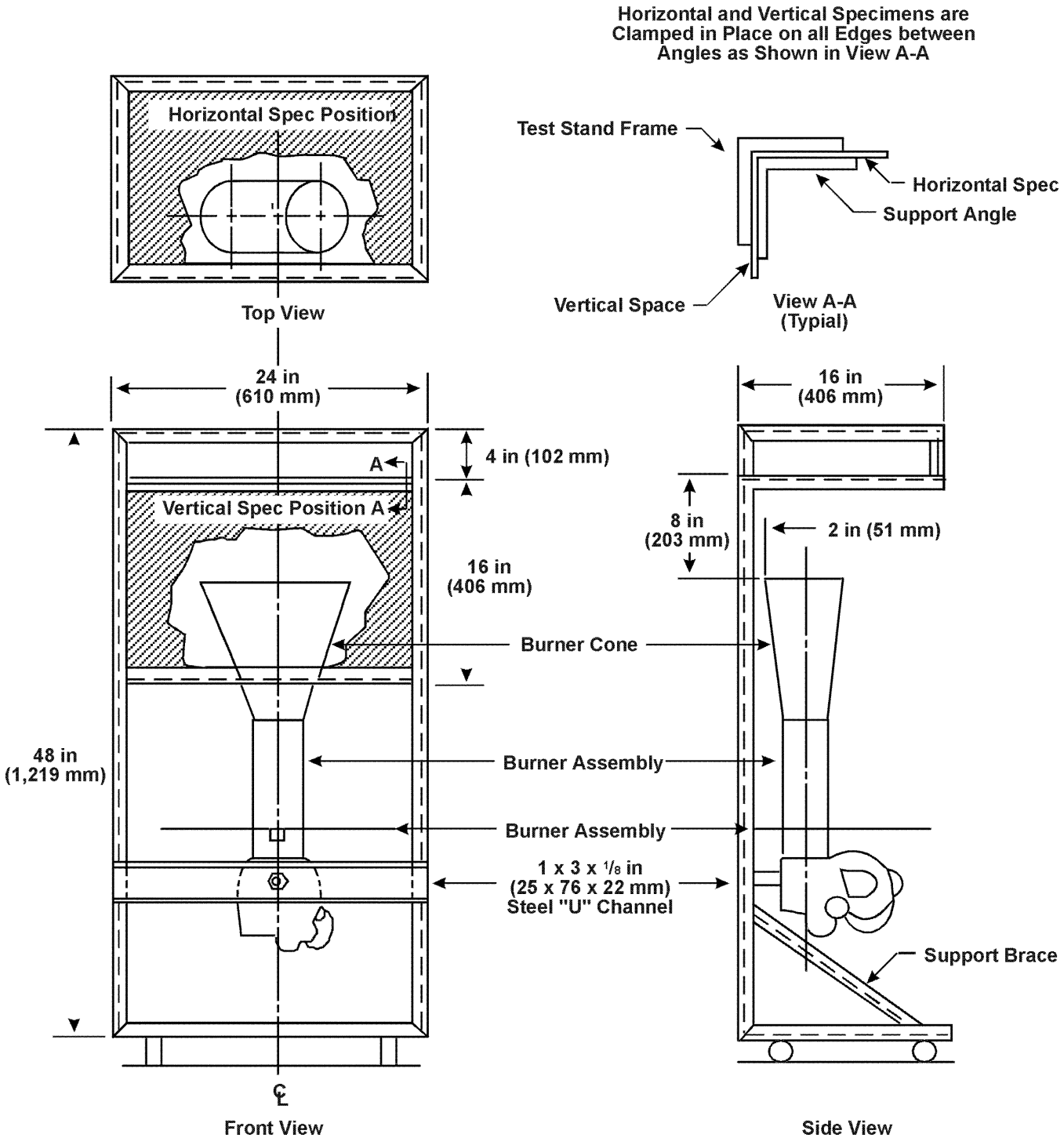

Figure 2: Calorimeter Bracket

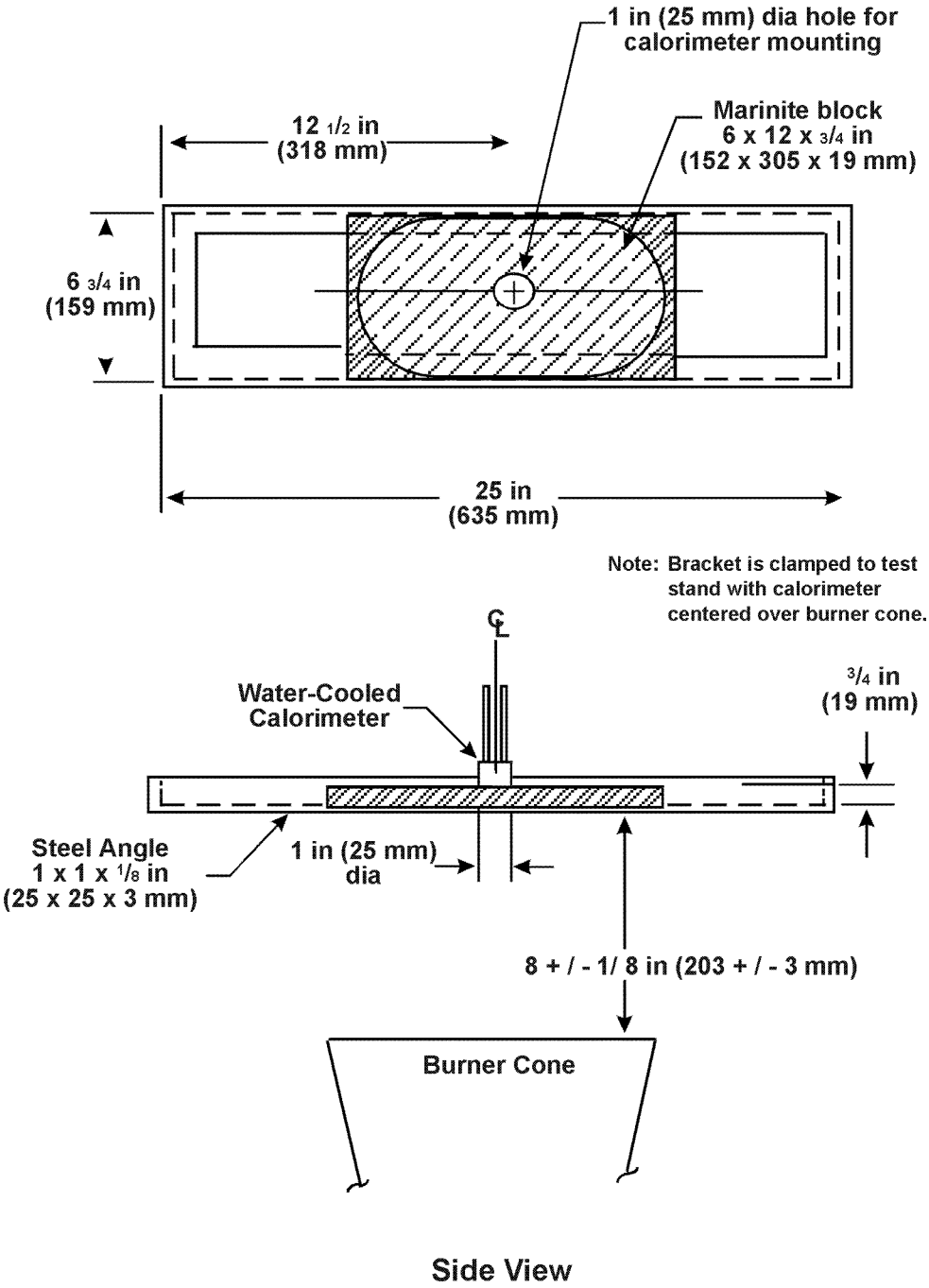

PART 180—CONTINUING QUALIFICATION AND MAINTENANCE OF PACKAGINGS

■ 23. The authority citation for part 180 continues to read as follows:

Authority: 49 U.S.C. 5101–5128; 49 CFR 1.53.

■ 24. In § 180.416, paragraph (d)(5) is revised to read as follows:

§ 180.416 Discharge system inspection and maintenance program for cargo tanks transporting liquefied compressed gases.

* * * * *

(d) * * *

(5) The operator must note each inspection in a record. That record must include the inspection date, the name of the person performing the inspection, the hose assembly identification number, the manufacturer of the hose assembly, the date the hose was assembled and tested, and an indication that the delivery hose assembly and piping system passed or failed the tests and inspections. The operator must retain a copy of each test and inspection record at its principal place of business or where the vehicle is housed or maintained until the next test of the same type is successfully completed.

* * * * *

Issued in Washington, DC on February 19, 2013, under authority delegated in 49 CFR part 106.

Cynthia L. Quarterman,

Administrator, Pipeline and Hazardous Materials Safety Administration.

[FR Doc. 2013–04198 Filed 3–8–13; 8:45 am]

BILLING CODE 4910–60–P

Proposed Rules

Federal Register
Vol. 78, No. 47
Monday, March 11, 2013

This section of the FEDERAL REGISTER contains notices to the public of the proposed issuance of rules and regulations. The purpose of these notices is to give interested persons an opportunity to participate in the rule making prior to the adoption of the final rules.

DEPARTMENT OF TRANSPORTATION

Federal Aviation Administration

14 CFR Part 39

[Docket No. FAA–2013–0207; Directorate Identifier 2011–NM–071–AD]

RIN 2120–AA64

Airworthiness Directives; The Boeing Company Airplanes

AGENCY: Federal Aviation Administration (FAA), DOT.

ACTION: Notice of proposed rulemaking (NPRM).

SUMMARY: We propose to supersede an existing airworthiness directive (AD) that applies to all The Boeing Company Model 737–300, –400, and –500 series airplanes. The existing AD currently requires repetitive inspections of the downstop assemblies on the main tracks of the No. 2, 3, 4, and No. 5 slats and the inboard track of the No. 1 and 6 slats to verify if any parts are missing, damaged, or in the wrong order; other specified actions; and related investigative and corrective actions if necessary. Since we issued that AD, the manufacturer has developed a modification, which, when installed, would terminate the repetitive inspections. This proposed AD would add an inspection of the slat can interior for foreign object debris (FOD), and removal of any FOD found; modification of the slat track hardware; an inspection for FOD and for damage to the interior surface of the slat cans; and related investigative and corrective actions, if necessary. We are proposing this AD to prevent loose or missing parts in the main slat track downstop assemblies, which could puncture the slat track housing and result in a fuel leak and consequent fire.

DATES: We must receive comments on this proposed AD by April 25, 2013.

ADDRESSES: You may send comments, using the procedures found in 14 CFR 11.43 and 11.45, by any of the following methods:

- *Federal eRulemaking Portal:* Go to *http://www.regulations.gov.* Follow the instructions for submitting comments.
- *Fax:* 202–493–2251.
- *Mail:* U.S. Department of Transportation, Docket Operations, M–30, West Building Ground Floor, Room W12–140, 1200 New Jersey Avenue SE., Washington, DC 20590.
- *Hand Delivery:* Deliver to Mail address above between 9 a.m. and 5 p.m., Monday through Friday, except Federal holidays.

For service information identified in this proposed AD, contact Boeing Commercial Airplanes, Attention: Data & Services Management, P. O. Box 3707, MC 2H–65, Seattle, Washington 98124–2207; telephone 206–544–5000, extension 1; fax 206–766–5680; Internet *https://www.myboeingfleet.com.* You may review copies of the referenced service information at the FAA, Transport Airplane Directorate, 1601 Lind Avenue SW., Renton, Washington. For information on the availability of this material at the FAA, call 425–227–1221.

Examining the AD Docket

You may examine the AD docket on the Internet at *http://www.regulations.gov;* or in person at the Docket Management Facility between 9 a.m. and 5 p.m., Monday through Friday, except Federal holidays. The AD docket contains this proposed AD, the regulatory evaluation, any comments received, and other information. The street address for the Docket Office (phone: 800–647–5527) is in the **ADDRESSES** section. Comments will be available in the AD docket shortly after receipt.

FOR FURTHER INFORMATION CONTACT: Nancy Marsh, Aerospace Engineer, Airframe Branch, ANM–120S, FAA, Seattle Aircraft Certification Office (ACO), 1601 Lind Avenue SW., Renton, Washington 98057–3356; phone: (425) 917–6440; fax: (425) 917–6590; email: nancy.marsh@faa.gov.

SUPPLEMENTARY INFORMATION:

Comments Invited

We invite you to send any written relevant data, views, or arguments about this proposed AD. Send your comments to an address listed under the **ADDRESSES** section. Include ''Docket No. FAA–2013–0207; Directorate Identifier 2011–NM–071–AD'' at the beginning of your comments. We specifically invite comments on the overall regulatory, economic, environmental, and energy aspects of this proposed AD. We will consider all comments received by the closing date and may amend this proposed AD because of those comments.

We will post all comments we receive, without change, to *http://www.regulations.gov,* including any personal information you provide. We will also post a report summarizing each substantive verbal contact we receive about this proposed AD.

Discussion

On March 11, 2008, we issued AD 2008–06–29, Amendment 39–15441 (73 FR 15397, March 24, 2008), for all The Boeing Company Model 737–300, -400, and -500 series airplanes. That AD requires repetitive inspections of the downstop assemblies on the main tracks of the No. 2, 3, 4, and 5 slats and the inboard track of the No. 1 and 6 slats to verify if any parts are missing, damaged, or in the wrong order; and related investigative and corrective actions if necessary. That AD resulted from reports of fuel leaking from a puncture in the slat track housing. We issued that AD to detect and correct loose or missing parts in the main slat track downstop assemblies, which could puncture the slat track housing and result in a fuel leak and consequent fire.

Actions Since Existing AD (73 FR 15397, March 24, 2008) Was Issued

The preamble to AD 2008–06–29, Amendment 39–15441 (73 FR 15397, March 24, 2008), specifies that we consider the requirements ''interim action'' and that the manufacturer was developing a modification to address the unsafe condition. That AD explains that we might consider further rulemaking if a modification is developed, approved, and available. The manufacturer now has developed such a modification, and we have determined that further rulemaking is indeed necessary; this proposed AD follows from that determination.

Relevant Service Information

AD 2008–06–29, Amendment 39–15441 (73 FR 15397, March 24, 2008), refers to Boeing Alert Service Bulletin 737–57A1301, dated February 5, 2008, as the appropriate source of service information for the required actions.

Boeing has since revised this service information. We reviewed Boeing Service Bulletin 737–57A1301, Revision 3, dated August 11, 2011, which adds procedures for inspecting the slat can interior for foreign object debris (FOD), removing any FOD found, modifying the slat track hardware; an inspection for FOD and a one-time inspection for damage to the interior surface of the slat cans for the inboard and outboard tracks of slats No. 2 through 5 and the inboard slats of tracks No. 1 and 6; and related investigative and corrective actions if necessary. Modifying the slat track hardware eliminates the need for the repetitive inspections.

Related investigative actions include a determination of the wall thickness of damaged slat cans, and an inspection for clearance between the bottom of the slat can and slat main track. Corrective actions include a blend-out repair or replacement of the slat can with a new or serviceable slat can, proper torque of nuts, and installation of a tapered filler.

FAA's Determination

We are proposing this AD because we evaluated all the relevant information and determined the unsafe condition described previously is likely to exist or develop in other products of the same type design.

Proposed AD Requirements

This proposed AD would retain all requirements of AD 2008–06–29, Amendment 39–15441 (73 FR 15397, March 24, 2008), and also would require the actions specified in the service information described previously.

Change to Existing AD (73 FR 15397, March 24, 2008)

This proposed AD would retain all requirements of AD 2008–06–29, Amendment 39–15441 (73 FR 15397, March 24, 2008). Since AD 2008–06–29 was issued, the AD format has been revised, and certain paragraphs have been rearranged. As a result, the corresponding paragraph identifiers have changed in this proposed AD, as listed in the following table:

REVISED PARAGRAPH IDENTIFIERS

Requirement in AD 2008–06–29, Amendment 39-15441 (73 FR 15397, March 24, 2008)	Corresponding requirement in this proposed AD
paragraph (d)	paragraph (e)
paragraph (e)	paragraph (f)
paragraph (f)	paragraph (g)

In addition, Boeing Commercial Airplanes has received an Organization Designation Authorization (ODA), which replaces the previous designation as a Delegation Option Authorization (DOA) holder. We have revised paragraph (k) of this proposed AD to add delegation of authority to Boeing Commercial Airplanes ODA to approve an alternative method of compliance for certain repairs required by this proposed AD.

Costs of Compliance

We estimate that this proposed AD affects 568 airplanes of U.S. registry.

We estimate the following costs to comply with this proposed AD:

ESTIMATED COSTS

Action	Labor cost	Parts cost	Cost per product	Cost on U.S. operators
Inspection of slat track housing [retained actions from existing AD 2008-06-29, Amendment 39–15441, (73 FR 15397, March 24, 2008)].	4 work-hours × $85 per hour = $340 per inspection cycle.	$0	$340	$193,120
One-time detailed inspection of slat can [new proposed action].	5 work-hours × $85 per hour = $85	$0	$425	$241,400
Installation of modification [new proposed action]	12 work-hours × $85 per hour = $1,020	$3,124	$4,144	$2,353,792

We have received no definitive data that would enable us to provide a cost estimate for the on-condition actions specified in this proposed AD.

Authority for This Rulemaking

Title 49 of the United States Code specifies the FAA's authority to issue rules on aviation safety. Subtitle I, Section 106, describes the authority of the FAA Administrator. Subtitle VII, Aviation Programs, describes in more detail the scope of the Agency's authority.

We are issuing this rulemaking under the authority described in Subtitle VII, Part A, Subpart III, Section 44701, ''General requirements.'' Under that section, Congress charges the FAA with promoting safe flight of civil aircraft in air commerce by prescribing regulations for practices, methods, and procedures the Administrator finds necessary for safety in air commerce. This regulation is within the scope of that authority because it addresses an unsafe condition that is likely to exist or develop on products identified in this rulemaking action.

Regulatory Findings

We have determined that this proposed AD would not have federalism implications under Executive Order 13132. This proposed AD would not have a substantial direct effect on the States, on the relationship between the national Government and the States, or on the distribution of power and responsibilities among the various levels of government.

For the reasons discussed above, I certify that the proposed regulation:

(1) Is not a ''significant regulatory action'' under Executive Order 12866,

(2) Is not a ''significant rule'' under the DOT Regulatory Policies and Procedures (44 FR 11034, February 26, 1979),

(3) Will not affect intrastate aviation in Alaska, and

(4) Will not have a significant economic impact, positive or negative, on a substantial number of small entities under the criteria of the Regulatory Flexibility Act.

List of Subjects in 14 CFR Part 39

Air transportation, Aircraft, Aviation safety, Incorporation by reference, Safety.

The Proposed Amendment

Accordingly, under the authority delegated to me by the Administrator, the FAA proposes to amend 14 CFR part 39 as follows:

PART 39—AIRWORTHINESS DIRECTIVES

■ 1. The authority citation for part 39 continues to read as follows:

Authority: 49 U.S.C. 106(g), 40113, 44701.

§ 39.13 [Amended]

■ 2. The FAA amends § 39.13 by removing airworthiness directive (AD) 2008–06–29, Amendment 39–15441 (73 FR 15397, March 24, 2008), and adding the following new AD:

The Boeing Company: Docket No. FAA–2013–0207; Directorate Identifier 2011–NM–071–AD.

(a) Comments Due Date

The FAA must receive comments on this AD action by April 25, 2013.

(b) Affected ADs

This AD supersedes AD 2008–06–29, Amendment 39–15441 (73 FR 15397, March 24, 2008).

(c) Applicability

This AD applies to all The Boeing Company Model 737–300, -400, and -500 series airplanes, certificated in any category.

(d) Subject

Joint Aircraft System Component (JASC)/Air Transport Association (ATA) of America Code 57: Wings.

(e) Unsafe Condition

This AD was prompted by reports of fuel leaking from a puncture in the slat track housing (referred to as ''slat can''). We are issuing this AD to prevent loose or missing parts in the main slat track downstop assemblies, which could puncture the slat track housing and result in a fuel leak and consequent fire.

(f) Compliance

Comply with this AD within the compliance times specified, unless already done.

(g) Retained Inspection of Downstop Assemblies and Corrective Action

This paragraph restates the requirements of paragraph (f) of AD 2008–06–29, Amendment 39–15441 (73 FR 15397, March 24, 2008), with revised service information. At the applicable times specified in Table 1 of paragraph 1.E. of Boeing Service Bulletin 737–57A1301, dated February 5, 2008; or Boeing Alert Service Bulletin 737–57A1301, Revision 3, dated August 11, 2011; except as provided by paragraph (g)(1) of this AD: Do a detailed inspection or borescope inspection of the downstop assemblies on the main tracks of the No. 2, 3, 4, and 5 slats and the inboard track of the No. 1 and 6 slats to verify if any parts are missing, damaged, or installed in the wrong order; and do all the other specified, related investigative, and corrective actions as applicable; by accomplishing all of the applicable actions specified in the Accomplishment Instructions of Boeing Alert Service Bulletin 737–57A1301, dated February 5, 2008; or Boeing Service Bulletin 737–57A1301, Revision 3, dated August 11, 2011; except as provided by paragraphs (g)(2) and (g)(3) of this AD. Repeat the inspection thereafter at the applicable times specified in Table 1 of paragraph 1.E. of Boeing Service Bulletin 737–57A1301, dated February 5, 2008; or Boeing Alert Service Bulletin 737–57A1301, Revision 3, dated August 11, 2011. Do all applicable related investigative and corrective actions before further flight. As of the effective date of this AD, only Boeing Service Bulletin 737–57A1301, Revision 3, dated August 11, 2011, may be used to accomplish the actions required by this paragraph.

(1) Where Boeing Alert Service Bulletin 737–57A1301, dated February 5, 2008, or Boeing Service Bulletin 737–57A1301, Revision 3, dated August 11, 2011, specifies counting the compliance time from ''the date on the service bulletin,'' this AD requires counting the compliance time from April 8, 2008 (the effective date of AD 2008–06–29, Amendment 39–15441 (73 FR 15397, March 24, 2008)).

(2) For airplanes on which any downstop assembly part is missing or damaged, a borescope inspection of the inside of the slat track housing for loose parts and damage to the wall of the slat track housing may be accomplished in lieu of the detailed inspection of the inside of the slat track housing that is specified in Boeing Alert Service Bulletin 737–57A1301, dated February 5, 2008; or Boeing Service Bulletin 737–57A1301, Revision 3, dated August 11, 2011. As of the effective date of this AD, only Boeing Service Bulletin 737–57A1301, Revision 3, dated August 11, 2011, may be used to do the actions specified in this paragraph.

(3) If any damaged slat track housing is found during any inspection required by paragraph (g) of this AD: Before further flight, repair in accordance with the Accomplishment Instructions of Boeing Service Bulletin 737–57A1301, Revision 3, dated August 11, 2011; replace the slat can with a new slat can having the same part number, in accordance with the Accomplishment Instructions of Boeing Service Bulletin 737–57A1301, Revision 3, dated August 11, 2011; or repair the slat can using a method approved in accordance with the procedures specified in paragraph (k) of this AD.

(h) New Detailed Inspection for Foreign Object Debris (FOD)

Within 24 months after the effective date of this AD, do a one-time detailed inspection of the slat can interior to detect FOD, in accordance with Part III of the Accomplishment Instructions of Boeing Service Bulletin 737–57A1301, Revision 3, dated August 11, 2011. If any FOD is found, before further flight, remove it, in accordance with the Accomplishment Instructions of Boeing Service Bulletin 737–57A1301, Revision 3, dated August 11, 2011.

(i) New Modification and Inspection

Within 72 months or 15,000 flight cycles, whichever occurs first, after the effective date of this AD: Modify the slat track hardware by installing new downstop assembly hardware, and do a detailed inspection for FOD and a one-time inspection for damage to the interior surface of the slat can for the inboard and outboard tracks of slats 2 through 5, and the inboard slats of tracks 1 and 6; and do all applicable related investigative and corrective actions; in accordance with the Accomplishment Instructions of Boeing Service Bulletin 737–57A1301, Revision 3, dated August 11, 2011. Do all applicable related investigative and corrective actions before further flight. Accomplishment of the actions required by this paragraph terminates the inspections required by paragraphs (g) and (h) of this AD.

(j) Credit for Previous Actions

This paragraph provides credit for the actions required by paragraphs (g), (h), and (i) of this AD, if those actions were performed before the effective date of this AD using Boeing Alert Service Bulletin 737–57A1301, Revision 1, dated September 24, 2009; or Boeing Alert Service Bulletin 737–57A1301, Revision 2, dated January 17, 2011; which are not incorporated by reference in this AD.

(k) Alternative Methods of Compliance (AMOCs)

(1) The Manager, Seattle Aircraft Certification Office (ACO), FAA, has the authority to approve AMOCs for this AD, if requested using the procedures found in 14 CFR 39.19. In accordance with 14 CFR 39.19, send your request to your principal inspector or local Flight Standards District Office, as appropriate. If sending information directly to the manager of the ACO, send it to the attention of the person identified in the Related Information section of this AD. Information may be emailed to: *9–ANM-Seattle-ACO–AMOC-Requests@faa.gov*.

(2) Before using any approved AMOC, notify your appropriate principal inspector, or lacking a principal inspector, the manager of the local flight standards district office/certificate holding district office.

(3) An AMOC that provides an acceptable level of safety may be used for any repair required by this AD if it is approved by the Boeing Commercial Airplanes Organization Designation Authorization (ODA) that has been authorized by the Manager, Seattle ACO, to make those findings. For a repair method to be approved, the repair must meet the certification basis of the airplane, and the approval must specifically refer to this AD.

(4) AMOCs approved previously in accordance with AD 2008–06–29, Amendment 39–15441 (73 FR 15397, March 24, 2008), are approved as AMOCs for the corresponding provisions of this AD.

(l) Related Information

(1) For more information about this AD, contact Nancy Marsh, Aerospace Engineer, Airframe Branch, ANM–120S, FAA, Seattle Aircraft Certification Office (ACO), 1601 Lind Avenue SW., Renton, WA 98057–3356; phone: (425) 917–6440; fax: (425) 917–6590; email: *nancy.marsh@faa.gov.*

(2) For service information identified in this AD, contact Boeing Commercial Airplanes, Attention: Data & Services Management, P.O. Box 3707, MC 2H–65, Seattle, Washington 98124–2207; telephone 206–544–5000, extension 1; fax 206–766–5680; Internet *https://www.myboeingfleet.com.* You may review copies of the referenced service information at the FAA, Transport Airplane Directorate, 1601 Lind Avenue SW., Renton, Washington. For information on the availability of this material at the FAA, call 425–227–1221.

Issued in Renton, Washington, on February 28, 2013.

Ali Bahrami,

Manager, Transport Airplane Directorate, Aircraft Certification Service.

[FR Doc. 2013–05505 Filed 3–8–13; 8:45 am]

BILLING CODE 4910–13–P

DEPARTMENT OF TRANSPORTATION

Federal Aviation Administration

14 CFR Part 39

[Docket No. FAA–2013–0208; Directorate Identifier 2012–NM–204–AD]

RIN 2120–AA64

Airworthiness Directives; Airbus Airplanes

AGENCY: Federal Aviation Administration (FAA), DOT.

ACTION: Notice of proposed rulemaking (NPRM).

SUMMARY: We propose to adopt a new airworthiness directive (AD) for all Airbus Model A318, A319, A320, and A321 series airplanes. This proposed AD was prompted by a determination that certain maintenance activities, such as repairs or the accumulation of paint layers, might cause the weight of an elevator to exceed the certified limits. This proposed AD would require checking the weight of certain elevators, and corrective action if necessary; and re-identifying the elevators. We are proposing this AD to detect and correct elevators that exceed the certified weight limits, which could result in reduced control of the airplane.

DATES: We must receive comments on this proposed AD by April 25, 2013.

ADDRESSES: You may send comments by any of the following methods:

- *Federal eRulemaking Portal:* Go to *http://www.regulations.gov.* Follow the instructions for submitting comments.
- *Fax:* (202) 493–2251.
- *Mail:* U.S. Department of Transportation, Docket Operations, M–30, West Building Ground Floor, Room W12–140, 1200 New Jersey Avenue SE., Washington, DC 20590.
- *Hand Delivery:* U.S. Department of Transportation, Docket Operations, M–30, West Building Ground Floor, Room W12–140, 1200 New Jersey Avenue SE., Washington, DC, between 9 a.m. and 5 p.m., Monday through Friday, except Federal holidays.

For service information identified in this proposed AD, contact Airbus, Airworthiness Office—EIAS, 1 Rond Point Maurice Bellonte, 31707 Blagnac Cedex, France; telephone +33 5 61 93 36 96; fax +33 5 61 93 44 51; email *account.airworth-eas@airbus.com;* Internet *http://www.airbus.com.* You may review copies of the referenced service information at the FAA, Transport Airplane Directorate, 1601 Lind Avenue SW., Renton, WA. For information on the availability of this material at the FAA, call 425–227–1221.

Examining the AD Docket

You may examine the AD docket on the Internet at *http://www.regulations.gov;* or in person at the Docket Operations office between 9 a.m. and 5 p.m., Monday through Friday, except Federal holidays. The AD docket contains this proposed AD, the regulatory evaluation, any comments received, and other information. The street address for the Docket Operations office (telephone (800) 647–5527) is in the **ADDRESSES** section. Comments will be available in the AD docket shortly after receipt.

FOR FURTHER INFORMATION CONTACT: Sanjay Ralhan, Aerospace Engineer, International Branch, ANM–116, Transport Airplane Directorate, FAA, 1601 Lind Avenue SW., Renton, WA 98057–3356; telephone (425) 227–1405; fax (425) 227–1149.

SUPPLEMENTARY INFORMATION:

Comments Invited

We invite you to send any written relevant data, views, or arguments about this proposed AD. Send your comments to an address listed under the **ADDRESSES** section. Include ''Docket No. FAA–2013–0208; Directorate Identifier 2012–NM–204–AD'' at the beginning of your comments. We specifically invite comments on the overall regulatory, economic, environmental, and energy aspects of this proposed AD. We will consider all comments received by the closing date and may amend this proposed AD based on those comments.

We will post all comments we receive, without change, to *http://www.regulations.gov,* including any personal information you provide. We will also post a report summarizing each substantive verbal contact we receive about this proposed AD.

Discussion

The European Aviation Safety Agency (EASA), which is the Technical Agent for the Member States of the European Community, has issued EASA Airworthiness Directive 2012–0221, dated October 23, 2012 (referred to after this as the Mandatory Continuing Airworthiness Information, or ''the MCAI''), to correct an unsafe condition for the specified products. The MCAI states:

> It has been identified that maintenance activities, such as repairs or the accumulation of paint layers, may cause the weight of an elevator to exceed the certified limits.
>
> This condition, if not detected and corrected, could result in reduced control of the aeroplane.
>
> For the reasons described above, this [EASA] AD requires a onetime weight check of both left-hand (LH) and right-hand (RH) elevators, accomplishment of corrective actions, as applicable, depending on findings, and re-identification of the elevators.
>
> The monitoring of elevator weight evolution after having complied with this [EASA] AD is ensured by Airbus A318/A319/A320/A321 ALS Part 2 CDCCL (Critical Design Configuration Control Limitations), compliance with which is currently required by EASA AD 2010–0071R1 [which corresponds to FAA AD 2011–14–06, Amendment 39–16741 (76 FR 42024, July 18, 2011)].

Corrective action includes removing the paint from the elevator surface and repainting, or replacing the elevator with a serviceable elevator if the weight estimate is over the certified weight limit; and repairing the elevator. You may obtain further information by examining the MCAI in the AD docket.

Relevant Service Information

Airbus has issued Service Bulletin A320–55–1034, including Appendices 1 and 2, dated August 19, 2011; and Service Bulletin A320–55–1042, Revision 01, dated June 29, 2012. The actions described in this service information are intended to correct the unsafe condition identified in the MCAI.

FAA's Determination and Requirements of This Proposed AD

This product has been approved by the aviation authority of another

country, and is approved for operation in the United States. Pursuant to our bilateral agreement with the State of Design Authority, we have been notified of the unsafe condition described in the MCAI and service information referenced above. We are proposing this AD because we evaluated all pertinent information and determined an unsafe condition exists and is likely to exist or develop on other products of the same type design.

Differences Between This Proposed AD and the MCAI or Service Information

Although Airbus Service Bulletin A320–55–1034, including Appendices 1 and 2, dated August 19, 2011, and the MCAI specify to contact the manufacturer for instructions to repair certain conditions, this proposed AD would require repairing those conditions using a method approved by either the Manager, International Branch, ANM–116, Transport Airplane Directorate, FAA; or the EASA (or its delegated agent).

Costs of Compliance

Based on the service information, we estimate that this proposed AD would affect about 755 products of U.S. registry. We also estimate that it would take about 45 work-hours per product to comply with the basic requirements of this proposed AD. The average labor rate is $85 per work-hour. Based on these figures, we estimate the cost of the proposed AD on U.S. operators to be $2,887,875, or $3,825 per product.

We have received no definitive data that would enable us to provide cost estimates for the on-condition actions specified in this proposed AD.

Authority for This Rulemaking

Title 49 of the United States Code specifies the FAA's authority to issue rules on aviation safety. Subtitle I, section 106, describes the authority of the FAA Administrator. ''Subtitle VII: Aviation Programs,'' describes in more detail the scope of the Agency's authority.

We are issuing this rulemaking under the authority described in ''Subtitle VII, Part A, Subpart III, Section 44701: General requirements.'' Under that section, Congress charges the FAA with promoting safe flight of civil aircraft in air commerce by prescribing regulations for practices, methods, and procedures the Administrator finds necessary for safety in air commerce. This regulation is within the scope of that authority because it addresses an unsafe condition that is likely to exist or develop on products identified in this rulemaking action.

Regulatory Findings

We determined that this proposed AD would not have federalism implications under Executive Order 13132. This proposed AD would not have a substantial direct effect on the States, on the relationship between the national Government and the States, or on the distribution of power and responsibilities among the various levels of government.

For the reasons discussed above, I certify this proposed regulation:

1. Is not a ''significant regulatory action'' under Executive Order 12866;
2. Is not a ''significant rule'' under the DOT Regulatory Policies and Procedures (44 FR 11034, February 26, 1979);
3. Will not affect intrastate aviation in Alaska; and
4. Will not have a significant economic impact, positive or negative, on a substantial number of small entities under the criteria of the Regulatory Flexibility Act.

We prepared a regulatory evaluation of the estimated costs to comply with this proposed AD and placed it in the AD docket.

List of Subjects in 14 CFR Part 39

Air transportation, Aircraft, Aviation safety, Incorporation by reference, Safety.

The Proposed Amendment

Accordingly, under the authority delegated to me by the Administrator, the FAA proposes to amend 14 CFR part 39 as follows:

PART 39—AIRWORTHINESS DIRECTIVES

■ 1. The authority citation for part 39 continues to read as follows:

Authority: 49 U.S.C. 106(g), 40113, 44701.

§ 39.13 [Amended]

■ 2. The FAA amends § 39.13 by adding the following new AD:

Airbus: Docket No. FAA–2013–0208; Directorate Identifier 2012–NM–204–AD.

(a) Comments Due Date

We must receive comments by April 25, 2013.

(b) Affected ADs

None.

(c) Applicability

This AD applies to the Airbus airplanes listed in paragraphs (c)(1) through (c)(4) of this AD, certificated in any category, all serial numbers.

(1) Model A318–111, –112, –121, and –122 airplanes.

(2) Model A319–111, –112, –113, –114, –115, –131, –132, and –133 airplanes.

(3) Model A320–111, –211, –212, –214, –231, –232, and –233 airplanes.

(4) Model A321–111, –112, –131, –211, –212, –213, –231, and –232 airplanes.

(d) Subject

Air Transport Association (ATA) of America Code 55, Stabilizers.

(e) Reason

This AD was prompted by a determination that certain maintenance activities, such as repairs or the accumulation of paint layers, might cause the weight of an elevator to exceed the certified limits. We are issuing this AD to detect and correct elevators that exceed certified weight limits, which could result in reduced control of the airplane.

(f) Compliance

You are responsible for having the actions required by this AD performed within the compliance times specified, unless the actions have already been done.

(g) Weight Check

At the applicable time specified in paragraph (h)(1) or (h)(2) of this AD: Do a weight check on the elevators identified in table 1 to paragraph (g) of this AD. Do the weight check in accordance with the Accomplishment Instructions of Airbus Service Bulletin A320–55–1034, including Appendices 1 and 2, dated August 19, 2011, except as specified in paragraphs (g)(1), (g)(2), and (g)(3) of this AD.

TABLE 1 TO PARAGRAPH (g) OF THIS AD—AFFECTED PART NUMBERS

Part name	P/N (first 12 digits only)
Left Hand Elevator	D55280001000
Left Hand Elevator	D55280001002
Left Hand Elevator	D55280001004
Left Hand Elevator	D55280001008
Left Hand Elevator	D55280001010
Left Hand Elevator	D55280001012
Left Hand Elevator	D55280002000
Right Hand Elevator	D55280001001
Right Hand Elevator	D55280001003
Right Hand Elevator	D55280001005
Right Hand Elevator	D55280001009
Right Hand Elevator	D55280001011
Right Hand Elevator	D55280001013
Right Hand Elevator	D55280002001

(1) A review of the airplane maintenance records is acceptable in lieu of the weight check required by paragraph (g) of this AD, provided the elevator weight can be conclusively determined from that review.

(2) The use of elevator weight data from production, as specified in Airbus Service Bulletin A320–55–1034, including Appendices 1 and 2, dated August 19, 2011, is acceptable in lieu of the weight check required by paragraph (g) of this AD, provided that the affected elevator has not been subjected to any maintenance action that could have modified the weight.

(3) Airplanes on which Airbus modification 150390 has been embodied in production are not required to do the actions specified in paragraph (g) of this AD,

provided that no elevator having a part number (P/N) specified in table 1 to paragraph (g) of this AD has been installed on that airplane since the airplane's first flight.

(h) Compliance Time for the Actions Specified in Paragraph (g) of This AD

(1) For an elevator for which, as of the effective date of this AD, the records show that no maintenance actions have been performed since first installation of the elevator on an airplane, which might have increased its weight: Within 72 months after the effective date of this AD.

(2) For elevators other that those identified in paragraph (h)(1) of this AD: Within 48 months after the effective date of this AD.

(i) Corrective Actions

If the elevator weight, determined as required by paragraph (g) of this AD, exceeds the weight limit specified in the Accomplishment Instructions of Airbus Service Bulletin A320–55–1034, including Appendices 1 and 2, dated August 19, 2011: Before further flight, do the applicable corrective actions followed by a new weight check of the elevator, in accordance with the Accomplishment Instructions of Airbus Service Bulletin A320–55–1034, including Appendices 1 and 2, dated August 19, 2011. If the elevator weight, determined as required by the new weight check, exceeds the weight limit specified in the Accomplishment Instructions of Airbus Service Bulletin A320–55–1034, including Appendices 1 and 2, dated August 19, 2011: Before further flight, repair the elevator using a method approved by either the Manager, International Branch, ANM–116, Transport Airplane Directorate, FAA; or the European Aviation Safety Agency (EASA) (or its delegated agent).

(j) Elevator Re-Identification

If the elevator weight, determined by the weight check specified in paragraph (g) or (i) of this AD, does not exceed the weight limit specified in the Accomplishment Instructions of Airbus Service Bulletin A320–55–1034, including Appendices 1 and 2, dated August 19, 2011: Within 72 months after the effective date of this AD, record the elevator weight and re-identify the elevator, in accordance with the Accomplishment Instructions of Airbus Service Bulletin A320–55–1042, Revision 01, dated June 29, 2012.

(k) Credit for Previous Actions

This paragraph provides credit for actions required by paragraph (j) of this AD, if those actions were performed before the effective date of this AD using Airbus Service Bulletin A320–55–1042, dated August 19, 2011, which is not incorporated by reference in this AD.

(l) Parts Installation Limitation

As of the effective date of this AD, no person may install on any airplane an elevator with a part number listed in table 1 to paragraph (g) of this AD, unless that elevator is in compliance with the requirements of this AD.

(m) Other FAA AD Provisions

The following provisions also apply to this AD:

(1) Alternative Methods of Compliance (AMOCs): The Manager, International Branch, ANM–116, Transport Airplane Directorate, FAA, has the authority to approve AMOCs for this AD, if requested using the procedures found in 14 CFR 39.19. In accordance with 14 CFR 39.19, send your request to your principal inspector or local Flight Standards District Office, as appropriate. If sending information directly to the International Branch, send it to ATTN: Sanjay Ralhan, Aerospace Engineer, International Branch, ANM–116, Transport Airplane Directorate, FAA, 1601 Lind Avenue SW., Renton, WA 98057–3356; telephone (425) 227–1405; fax (425) 227–1149. Information may be emailed to: *9-ANM-116-AMOC-REQUESTS@faa.gov.* Before using any approved AMOC, notify your appropriate principal inspector, or lacking a principal inspector, the manager of the local flight standards district office/certificate holding district office. The AMOC approval letter must specifically reference this AD.

(2) Airworthy Product: For any requirement in this AD to obtain corrective actions from a manufacturer or other source, use these actions if they are FAA-approved. Corrective actions are considered FAA-approved if they are approved by the State of Design Authority (or their delegated agent). You are required to assure the product is airworthy before it is returned to service.

(n) Related Information

(1) Refer to Mandatory Continuing Airworthiness Information (MCAI) EASA Airworthiness Directive 2012–0221, dated October 23, 2012, and the Airbus service information specified in paragraphs (n)(1)(i) and (n)(1)(ii) of this AD; for related information.

(i) Airbus Service Bulletin A320–55–1034, including Appendices 1 and 2, dated August 19, 2011.

(ii) Airbus Service Bulletin A320–55–1042, Revision 01, dated June 29, 2012.

(2) For service information identified in this AD, contact Airbus, Airworthiness Office—EIAS, 1 Rond Point Maurice Bellonte, 31707 Blagnac Cedex, France; telephone +33 5 61 93 36 96; fax +33 5 61 93 44 51; email *account.airworth-eas@airbus.com*; Internet *http://www.airbus.com.* You may review copies of the referenced service information at the FAA, Transport Airplane Directorate, 1601 Lind Avenue SW., Renton, WA. For information on the availability of this material at the FAA, call 425–227–1221.

Issued in Renton, Washington, on March 1, 2013.

Ali Bahrami,

Manager, Transport Airplane Directorate, Aircraft Certification Service.

[FR Doc. 2013–05563 Filed 3–8–13; 8:45 am]

BILLING CODE 4910–13–P

DEPARTMENT OF THE TREASURY

Internal Revenue Service

26 CFR Parts 1 and 301

[REG–148873–09]

RIN 1545–BJ16

IRS Truncated Taxpayer Identification Numbers; Hearing Cancellation

AGENCY: Internal Revenue Service (IRS), Treasury.

ACTION: Cancellation of a notice of public hearing on proposed rulemaking.

SUMMARY: This document cancels a public hearing on proposed regulations under the Internal Revenue Code. The proposed regulations provide guidance for creating a new taxpayer identifying number known as an IRS truncated taxpayer identification number, a TTIN.

DATES: The public hearing, originally scheduled for March 12, 2013 at 10 a.m. is cancelled.

FOR FURTHER INFORMATION CONTACT: Oluwafunmilayo Taylor of the Publications and Regulations Branch, Legal Processing Division, Associate Chief Counsel (Procedure and Administration) at (202) 622–7180 (not a toll-free number).

SUPPLEMENTARY INFORMATION: A notice of proposed rulemaking and a notice of public hearing that appeared in the **Federal Register** on Monday, January 7, 2013 (78 FR 913) announced that a public hearing was scheduled for March 12, 2013, at 10 a.m. in the IRS Auditorium, Internal Revenue Building, 1111 Constitution Avenue NW. Washington, DC. The subject of the public hearing was under sections 6042, 6043, 6044, 6045, 6049, and 6050 of the Internal Revenue Code.

The public comment period for these regulations expired on February 20, 2013. The notice of proposed rulemaking and notice of public hearing instructed those interested in testifying at the public hearing to submit a request to speak and an outline of topics to be addressed. The agency received one request. As of Monday, March 5, 2013 that request was withdrawn. The public hearing scheduled for March 12, 2013, is cancelled.

LaNita VanDyke,

Chief, Publications and Regulations Branch, Legal Processing Division, Associate Chief Counsel (Procedure and Administration).

[FR Doc. 2013–05516 Filed 3–8–13; 8:45 am]

BILLING CODE 4830–01–P

ENVIRONMENTAL PROTECTION AGENCY

40 CFR Part 271

[EPA–R02–RCRA–2013–0144; FRL–9693–3]

New York: Final Authorization of State Hazardous Waste Management Program Revisions

AGENCY: Environmental Protection Agency (EPA).

ACTION: Proposed rule.

SUMMARY: New York State has applied to EPA for final authorization of changes to its hazardous waste program under the Solid Waste Disposal Act, as amended, commonly referred to as the Resource Conservation and Recovery Act (RCRA). EPA proposes to grant final authorization to New York for these changes, with limited exceptions. EPA has determined that these changes satisfy all requirements needed to qualify for final authorization, and is authorizing the state's changes through a direct final action.

DATES: Comments must be received on or before April 10, 2013.

ADDRESSES: Submit your comments, identified by Docket ID No. EPA–R02–RCRA–2013–0144, by one of the following methods:

- *http://www.regulations.gov.* Follow the on-line instructions for submitting comments.
- *Email: infurna.michael@.epa.gov.*
- *Fax:* (212) 637–4437, to the attention of Michael Infurna.
- *Mail:* Michael Infurna, EPA, Region 2, 290 Broadway, 22nd Floor, New York, NY 10007.
- *Hand Delivery or Courier: Deliver your comments to:* Michael Infurna, EPA, Region 2, 290 Broadway, 22nd Floor, New York, NY 10007. Such deliveries are only accepted during the Regional Office's normal hours of operation. The public is advised to call in advance to verify the business hours. Special arrangements should be made for deliveries of boxed information.

For further information on how to submit comments, please see today's direct final rule published in the ''Rules and Regulations'' section of this **Federal Register**.

FOR FURTHER INFORMATION CONTACT: Michael Infurna, EPA Region 2, 290 Broadway, 22nd floor, New York, NY 10007; telephone number (212) 637–4177; *fax number:* (212) 637–4437; email address: *infurna.michael@.epa.gov.*

SUPPLEMENTARY INFORMATION: In the ''Rules and Regulations'' section of this **Federal Register** notice, EPA is authorizing the changes by a direct final rule. EPA did not make a proposal prior to the direct final rule because we believe this action is not controversial and do not expect comments that oppose it. We have explained the reasons for this authorization in the preamble to the direct final rule. Unless we receive adverse written comments which oppose this authorization during the comment period, the direct final rule will become effective on the date it establishes, and we will not take further action on this proposal. If we receive comments that oppose this action, we will either withdraw the direct final rule or the portion of the direct final rule that is the subject of the comments. Only the remaining portion of the rule will take effect. We will then respond to those public comments opposing this authorization in a later final authorization notice based on this proposal. This final authorization notice may or may not include changes based on comments received during the public notice comment period. You may not have another opportunity for comment. If you want to comment on this action, you should do so at this time.

Dated: December 19, 2012.

Judith A. Enck,

Regional Administrator, Region 2.

[FR Doc. 2013–05479 Filed 3–8–13; 8:45 am]

BILLING CODE 6560–50–P

DEPARTMENT OF COMMERCE

National Oceanic and Atmospheric Administration

50 CFR Part 622

[Docket No. 120510052–3174–01]

RIN 0648–BC20

Fisheries of the Caribbean, Gulf of Mexico, and South Atlantic; Reef Fish Fishery of Puerto Rico and the U.S. Virgin Islands; Parrotfish Management Measures in St. Croix

AGENCY: National Marine Fisheries Service (NMFS), National Oceanic and Atmospheric Administration (NOAA), Commerce.

ACTION: Proposed rule; request for comments.

SUMMARY: NMFS proposes regulations to implement management measures described in Regulatory Amendment 4 to the Fishery Management Plan for the Reef Fish Fishery of Puerto Rico and the U.S. Virgin Islands (FMP), as prepared by the Caribbean Fishery Management Council (Council). If implemented, this rule would establish minimum size limits for parrotfish in the exclusive economic zone (EEZ) off St. Croix in the U.S. Virgin Islands (USVI). The intent of this proposed rule is to provide additional protection from harvest to maturing parrotfish and to assist the stock in achieving optimum yield (OY).

DATES: Written comments must be received on or before April 10, 2013.

ADDRESSES: You may submit comments on this document, identified by ''NOAA–NMFS–2013–0009'', by any of the following methods:

- *Electronic Submission:* Submit all electronic public comments via the Federal e-Rulemaking Portal. Go to *www.regulations.gov/#!docketDetail;D=NOAA-NMFS-2013-0009,* click the ''Comment Now!'' icon, complete the required fields, and enter or attach your comments.
- *Mail:* Submit written comments to Britni Tokotch, Southeast Regional Office, NMFS, 263 13th Avenue South, St. Petersburg, FL 33701.

Instructions: Comments sent by any other method, to any other address or individual, or received after the end of the comment period, may not be considered by NMFS. All comments received are a part of the public record and will generally be posted for public viewing on *www.regulations.gov* without change. All personal identifying information (*e.g.,* name, address, etc.), confidential business information, or otherwise sensitive information submitted voluntarily by the sender will be publicly accessible. NMFS will accept anonymous comments (enter ''N/A'' in the required fields if you wish to remain anonymous). Attachments to electronic comments will be accepted in Microsoft Word, Excel, or Adobe PDF file formats only.

Electronic copies of the regulatory amendment, which includes an environmental assessment and an initial regulatory flexibility analysis (IRFA), and a regulatory impact review may be obtained from the Southeast Regional Office Web site at *http://sero.nmfs.noaa.gov/sf/CaribbeanReefFish.htm.*

FOR FURTHER INFORMATION CONTACT: Britni Tokotch, Southeast Regional Office, NMFS, telephone 727–824–5305; email: *Britni.Tokotch@noaa.gov.*

SUPPLEMENTARY INFORMATION: The reef fish fishery of Puerto Rico and the USVI is managed under the FMP, which was prepared by the Council and implemented through regulations at 50 CFR part 622 under the authority of the Magnuson-Stevens Fishery Conservation and Management Act (Magnuson-Stevens Act).

Background

In the 2011 Status of U.S. Fisheries Report to Congress, Caribbean parrotfish were classified as undergoing overfishing. Parrotfish perform an important ecological function on U.S. Caribbean coral reefs: They graze on algae, which competes for space with a variety of coral species. This ecological role has become more relevant in the past 30 years as the longspine sea urchin, another important coral reef grazer, has declined in population throughout the Caribbean. Additionally, parrotfish are considered a cultural component of the U.S. Caribbean diet, particularly in St. Croix, where they are a targeted species.

To maintain the viability of the parrotfish stock, an adequate number of juvenile parrotfish must achieve maturity and spawn prior to being harvested. In the absence of minimum size limits, substantial numbers of immature parrotfish will likely be harvested, eliminating the potential of those fish to reach maturity and spawn.

Within the Caribbean reef fish fishery, the parrotfish fishery management unit is composed of 10 species: blue, midnight, rainbow, princess, queen, redfin, redtail, stoplight, striped, and redband parrotfish. Amendment 5 to the FMP (Amendment 5)(76 FR 82404, December 30, 2011), prohibited the harvest of midnight, blue, and rainbow parrotfish, and established recreational bag and possession limits for the other parrotfish species. Additionally, Amendment 5 set annual catch limits (ACLs) and accountability measures (AMs) for three island management areas: Puerto Rico, St. Thomas/St. John (USVI), and St. Croix (USVI).

Management Measure Contained in this Proposed Rule

This proposed rule would establish minimum size limits for parrotfish species in the EEZ off St. Croix. These limits would apply to both the commercial and recreational sectors. This rule would establish a minimum size limit of 8 inches (20.3 cm), fork length, for redband parrotfish and 9 inches (22.9 cm), fork length, for all other parrotfish. The current harvest prohibition for midnight, blue, and rainbow parrotfish would remain in effect.

The Council and NMFS are proposing a minimum size limit of 9 inches (22.9 cm) for all but one of the parrotfish species for which harvest is allowed, because this size limit best captures the range of sizes at maturity for these species. The Council and NMFS are proposing a minimum size limit of 8 inches (20.3 cm) for redband parrotfish because they are relatively smaller fish and they reach maturity at a smaller size than the other managed parrotfish species. A minimum size limit would reduce reduce mortality of smaller (generally female) parrotfish, thereby enhancing spawning biomass and the supply of gametes (especially eggs), and ultimately increasing yield-per-recruit from the stock (assuming discard mortality is low). Parrotfish discard mortality is assumed to be low because spears are the predominant gear used to harvest parrotfish and therefore the fish are individually targeted. In addition, discard mortality of parrotfish harvested by trap is expected to be low because parrotfish are harvested in relatively shallow waters, thus reducing the threat of barotrauma related mortality. A minimum size limit also reduces the likelihood of recruitment overfishing that might otherwise lead to a stock biomass level below maximum sustainable yield. Therefore, this proposed rule would set a size limit to increase the number of juvenile parrotfish that can reach sexual maturity and assist the stock in achieving OY.

The Council chose not to establish minimum size limits for Puerto Rico and St. Thomas/St. John island management areas in the U.S. Caribbean because parrotfish harvest in those areas is substantially lower than in St. Croix. St. Croix parrotfish harvest represents 36.4 percent of the total combined St. Croix commercial ACL (all St. Croix commercial ACLs), in pounds. The recreational harvest of parrotfish in St. Croix and in St. Thomas/St. John is unknown. In Puerto Rico, parrotfish comprise 3.5 percent and 2.3 percent total combined of the Puerto Rico recreational and commercial ACLs, in pounds, respectively. In St. Thomas/St. John, parrotfish comprise 7.2 percent of the total combined commercial ACL, in pounds.

Classification

Pursuant to section 304(b)(1)(A) of the Magnuson-Stevens Act, the Assistant Administrator has determined that this proposed rule is consistent with the FMP, the regulatory amendment, the Magnuson-Stevens Act, and other applicable law, subject to further consideration after public comment.

This proposed rule has been determined to be not significant for purposes of Executive Order 12866.

NMFS prepared an IRFA, as required by section 603 of the Regulatory Flexibility Act, 5 U.S.C. 603, for this rule. The IRFA describes the economic impact that this proposed rule, if adopted, would have on small entities. A description of the proposed rule, why it is being considered, the objectives of, and legal basis for the rule are contained at the beginning of this section in the preamble and in the **SUMMARY** section of the preamble. A copy of the full analysis is available from NMFS (see **ADDRESSES**). A summary of the IRFA follows.

The purpose of this rule is to provide protection from harvest to maturing parrotfish in the EEZ off St. Croix. The parrotfish management unit in the U.S. Caribbean is composed of multiple species. Together, these species represent an ecologically, culturally, and economically important group, particularly on the island of St. Croix where they support a targeted fishery for both the commercial and recreational sectors, in both the EEZ and territorial waters. The commercial and recreational minimum size limits are necessary for the St. Croix island management unit because without minimum size limits, substantial numbers of immature parrotfish may be harvested, thus eliminating individuals before they have a chance to reproduce.

The Magnuson-Stevens Act provides the statutory basis for the proposed action. No duplicative, overlapping, or conflicting Federal rules have been identified.

The rule would apply directly to licensed commercial fishermen in the Finfish Fishing Industry (NAICS 114111) and indirectly to for-hire operations in the Charter Fishing Industry (NAICS 487210) that harvest seven parrotfish species (princess, queen, redfin, redtail, redband, stoplight, and striped) within the EEZ off St. Croix, USVI.

An estimated 142 of St. Croix's 177 small businesses in the Finfish Fishing Industry are expected to be affected by this proposed rule. None of the three small businesses in the Charter Fishing Industry are expected to be affected because for-hire fishing boats in the U.S. Caribbean tend to target pelagic species and other sport fish, not parrotfish.

This rule would not establish any new reporting or record-keeping requirements. This rule would require small businesses in the Finfish Fishing Industry to measure parrotfish and discard those that are under their respective minimum size limit. Three scenarios are presented to illustrate the range of adverse economic impacts on these small businesses.

In the first scenario, small businesses are assumed to be currently catching and landing larger parrotfish in reaction to the ACL established for parrotfish off St. Croix (76 FR 82404, December 30, 2011), and rarely, if at all, catching

parrotfish less than the proposed minimum size limits. If true, the establishment of an 8 inch (20.3 cm) minimum size limit for redband parrotfish and a 9 inch (22.9 cm) minimum size limit for all other allowable parrotfish would have little to no adverse economic impact beyond the estimated $5 to $10 cost of acquiring a measuring tool and an additional small amount of time (estimated 4–5 seconds) to measure a smaller sized parrotfish.

The second scenario assumes small businesses have not changed their catch patterns because of the St. Croix parrotfish ACL and cannot mitigate for losses of landings due to discarded and not speared undersized parrotfish. If true, the proposed implementation of parrotfish minimum size limits for St. Croix would result in an estimated annual loss of parrotfish landings between 960 lb (435 kg) and 13,920 lb (6,314 kg). If the average ex-vessel price of a parrotfish is estimated as high as $5 per pound, then annual revenue losses to all small businesses would be between $4,800 and $69,600. Added to these revenue losses would be the additional time needed to measure every parrotfish that was caught in traps, nets or lines, which would increase trip time and trip-associated costs. Also, there would be the additional time for divers to visually measure every parrotfish that could be speared, which would increase trip time and trip-associated costs. These combined losses of revenue and added time and trip costs would not be distributed equally. Because pot-and-trap fishermen have landed the greatest percent of smaller parrotfish, small businesses that use pots and traps would experience the greatest percent losses of revenues and greatest increase in fishing time and trip costs.

A third and final scenario expects small businesses would act to mitigate for losses of commercial landings caused by the establishment of parrotfish minimum size limits in St. Croix by increasing fishing time to catch enough legally sized parrotfish, or other species, to offset pounds discarded in undersized parrotfish. It is expected that the ability of small businesses to increase their time on, or in the water, and associated costs of that time varies significantly, depending on the commercial fisher's personal and family responsibilities, including if they are engaged in full-time or part-time wage labor or not. It is unknown if such a disproportionate adverse impact on pot-and-trap fishermen could also represent a disproportionate adverse impact on St. Croix's small businesses of a specific geographic area or business size or by the ethnicity, age, or race of the owner of the business.

The status quo alternative (no setting of a parrotfish minimum size limit) was considered but rejected by the Council because it would allow for continued harvest of juvenile parrotfish in St. Croix before they can reach sexual maturity, which increases the risk of an inferior (less productive) stock and reduced revenues from parrotfish landings in the long term.

In summary, the proposed rule, if implemented, would likely have a significantly larger adverse economic impact on St. Croix pot-and-trap and other non-diving fishermen because a larger percentage of their historical catches are composed of smaller parrotfish. The proposed action may drive pot-and-trap and other non-diving commercial fishermen out of the parrotfish component of the reef fish fishery. Moreover, the economic impact of this rule cannot be considered in isolation. It would add to the adverse economic impacts of the recently implemented St. Croix Parrotfish ACL (76 FR 82404, December 30, 2011), which is expected to reduce non-diving fishermen's historical shares of annual landings of parrotfish.

This proposed rule would not be expected to directly affect any other small entities.

List of Subjects in 50 CFR Part 622

Fisheries, Fishing, Puerto Rico, Reporting and recordkeeping requirements, Virgin Islands.

Dated: March 5, 2013.

Alan D. Risenhoover,

Director, Office of Sustainable Fisheries, performing the functions and duties of the Deputy Assistant Administrator for Regulatory Programs, National Marine Fisheries Service.

For the reasons set out in the preamble, 50 CFR part 622 is proposed to be amended as follows:

PART 622—FISHERIES OF THE CARIBBEAN, GULF, AND SOUTH ATLANTIC

■ 1. The authority citation for part 622 continues to read as follows:

Authority: 16 U.S.C. 1801 *et seq.*

■ 2. In § 622.37, paragraph (a) is revised to read as follows:

§ 622.37 Size limits.

* * * * *

(a) *Caribbean reef fish:* (1) Yellowtail snapper—12 inches (30.5 cm), TL.

(2) Parrotfishes, except redband parrotfish, in the St. Croix Management Area only (as defined in Table 2 of Appendix E to Part 622)—9 inches (22.9 cm), fork length. See § 622.32(b)(1)(v) for the current prohibition on the harvest and possession of midnight parrotfish, blue parrotfish, or rainbow parrotfish.

(3) Redband parrotfish, in the St. Croix Management Area only (as defined in Table 2 of Appendix E to Part 622)—8 inches (20.3 cm), fork length.

* * * * *

[FR Doc. 2013–05538 Filed 3–8–13; 8:45 am]

BILLING CODE 3510–22–P

Notices

Federal Register
Vol. 78, No. 47
Monday, March 11, 2013

This section of the FEDERAL REGISTER contains documents other than rules or proposed rules that are applicable to the public. Notices of hearings and investigations, committee meetings, agency decisions and rulings, delegations of authority, filing of petitions and applications and agency statements of organization and functions are examples of documents appearing in this section.

DEPARTMENT OF COMMERCE

International Trade Administration

Auto Supply Chain Trade Mission to Mexico City and Monterrey, Mexico; September 23–26, 2013

AGENCY: International Trade Administration, Department of Commerce.

ACTION: Notice.

Mission Description

The United States Department of Commerce, International Trade Administration's, U.S. and Foreign Commercial Service (CS) is organizing an auto supply chain trade mission to Mexico City and Monterrey, Mexico, September 23–26, 2013. This mission is intended to focus on a variety of U.S. industry and service providers, particularly those suppliers of spare parts, original equipment manufacturer (OEM) parts and components, hybrid vehicle components, precision assembly devices and systems that enhance efficiency in the OEM manufacturing process.

The mission will introduce participants to end-users and prospective partners whose needs and capabilities are targeted to the respective U.S. participants' strengths. Participating in an official U.S. industry delegation, rather than traveling to Mexico independently, will enhance the companies' abilities to secure meetings with potential partners and buyers.

Commercial Setting

The $500 billion in annual bilateral trade between the United States and Mexico is fueled in large part by industrial manufacturing centers located throughout northern and central Mexico, which is also supported by an ever-growing national cargo transportation industry.

Mexico's automotive industry ranks as the 8th largest vehicle producer in the world and the second-largest in Latin America. The automotive sector accounts for 17.6 percent of Mexico's manufacturing sector and 3 percent of its national GDP contribution. There are currently nine manufacturers in Mexico: General Motors, Chrysler, Ford, Nissan, Fiat, Renault, Honda, Toyota, and Volkswagen. This manufacturing base produces 42 brands in 20 manufacturing plants. Nissan, GM, Volkswagen, and Honda plan to increase their production in Mexico while Fiat, Audi and Mazda are currently opening up new plants for vehicle manufacturing in Mexico. Vehicle production in Mexico has almost doubled in the past three years.

The northern state of Nuevo Leon represents 27 percent of the national auto parts industry and it is the world leader in the production of aluminum components such as cylinder heads, engine blocks and transmission parts. Exports from this state represented 11.8 percent of Mexico's automotive exports and automotive manufacturing grew 83 percent in the last five years.

In 2012, Mexico produced more than 2.8 million cars– and the projection for 2013 is 3 million cars. 83 percent of its production is devoted to exports and the remaining 17 percent go to the domestic market. The National Auto parts Industry Association (INA) reported significant growth of the auto parts industry from 2011 to 2012.

In 2012, the Mexican automotive industry experienced a 12.4 percent growth of local vehicle production due to higher demand, domestically as well as in the United States and other markets. The countries to which Mexico exports include: United States (63.9 percent); Canada (6.8 percent); Latin America (15.5 percent); Asia (2 percent), Europe (9 percent) and others (1.3 percent). Mexican vehicle sales in 2012 increased 9 percent compared with 2011. Market realities have led to new trends in car manufacturing, including smaller car sizes and increased fuel efficiency.

The aftermarket is expected to increase, as Mexico imposed new duties and requirements on the importation of used vehicles since 2009. As a result, repair and maintenance of used vehicles in Mexico will require varied parts. In addition, other opportunities exist for U.S. exporters of spare parts, equipment and new technologies oriented to reduce costs and time spent on maintenance and repairs.

Best Prospects

The greatest opportunities include: Spare and replacement parts for gasoline and diesel engines; electrical parts, collision repair parts; gear boxes; drive axles; catalytic converters; and steering wheels. In the first and second-tier supply chain sector, opportunities include: OEM parts and components; precision assembly devices; machined parts; hybrid vehicle components; suspension systems; and pre-assembly components such as small and progressive stampings. Other products in demand include: Electronic components; specialized tooling; systems that eliminate waste and green technologies such as new combustion systems to reduce gas emission and oil consumption.

In addition, identified needs include: Injection molding (small and large components), aluminum extrusion and post fabrication (anodizing, machining, punching, assembly); steel stamping for sunroof components, aluminum die casting for sun roof components; rubber parts for sunroof or fuel tank cushion; compression molding; glass for sunroof; fuel tank components (plastic tubes), fuel tank components (valves e.g. ORVR/VSF, joints); fuel tank components (pump O-ring); cold forging; plastic molding; rubber molding; die casting; and machining equipment.

Mission Goals

The short term goals of the Auto Supply Chain Trade Mission to Mexico are (1) to introduce U.S. companies to potential end-users, distributors and representatives in Mexico City, Monterrey, and their surrounding areas, and (2) to introduce U.S. companies to industry leaders and government officials in Mexico City and Monterrey to learn about various opportunities in the automotive industry.

Mission Scenario

September 23/Mexico City

Mission participants have a breakfast briefing including an overview of the auto industry, doing business in Mexico, and a review of the mission itinerary. The delegation then tours an automotive manufacturer's facility (Chrysler) in Toluca, Mexico and

attends a presentation on the purchasing process for Mexican automotive companies. The day will close with a reception with local industry leaders and government officials.

September 24/Mexico City

Companies have a full day of matchmaking appointments with Mexico City companies.

OR

Presentations from General Motors and Ford on their purchasing process for suppliers

Mission participants depart the evening of September 24 to Monterrey.

September 25/Monterrey

Mission participants have a short briefing and review the mission itinerary. The delegation then tours an automotive plant in Monterrey and receives a presentation on the purchasing process for Mexican automotive companies.

The tour will be followed by the inauguration of the new automotive parts trade show at Cintermex (a U.S. Department of Commerce strategic partner) with time to tour the show and talk to exhibitors. The day will close with a reception with local industry leaders and government officials.

September 26/Monterrey

Companies have a full day of matchmaking appointments with Monterrey companies. The mission ends that afternoon and mission participants can depart that night or the following morning.

The following items are included in the price of the trade mission:

- Pre-travel Webinar briefing, covering Mexican business practices and security;
- National promotion within Mexico of trade mission, including wide circulation of printed company directory;
- Welcome receptions in Mexico City and Monterrey with industry representatives;
- Commercial breakfast briefings in Mexico City and Monterrey;
- Group transportation to all receptions and plant tours;
- Discounted hotel rates in Mexico City and Monterrey;
- One day of pre-scheduled meetings (4–5 meetings each stop) with potential partners, distributors, end users, or local industry contacts in both Mexico City and Monterrey;
- A designated escort/translator to provide assistance during scheduled matchmaking meetings.

Proposed Mission Agenda

The mission program will begin in the morning of Monday, September 23, 2013, and continue through the afternoon of September 26, 2013.

September 22 Mexico City
Arrival/Hotel check-in
September 23 Mexico City
Breakfast briefing
Chrysler Plant tour
Welcome reception
September 24 Mexico City
Breakfast on your own
Matchmaking meetings with potential clients, distributors/representatives; or
Headquarters visits to:
GM—company presentation and purchasing process
Ford—company presentation and purchasing process
Depart Mexico City en route to Monterrey
Arrival/Hotel check-in Monterrey
September 25 Monterrey
Breakfast briefing
Plant tour
Inauguration and tour of automotive trade show
Evening Reception
September 26 Monterrey
Breakfast on your own
Matchmaking meetings with potential clients, distributors/representatives
Depart Monterrey that night or the following morning

Participation Requirements

All parties interested in participating in the Auto Supply Chain Trade Mission to Mexico must complete and submit an application for consideration by the U.S. Department of Commerce. All applicants will be evaluated on their ability to meet certain conditions and to satisfy the selection criteria as outlined below. This mission has a goal of a minimum of 15 and a maximum of 20 companies to be selected to participate in the mission from the applicant pool. U.S. companies already doing business in Mexico as well as U.S. companies seeking to enter the market for the first time are encouraged to apply.

Fees and Expenses

After a company has been selected to participate on the mission, a payment to the U.S. Department of Commerce in the form of a participation fee is required. The participation fee will be US $3450 for large firms and $2900 for a small or medium-sized enterprise (SME).[1] The fee for each additional firm representative (large firm or SME) is $300. Expenses for air travel (to Mexico City, Monterrey and return), lodging, meals and incidentals will be the responsibility of each mission participant.

Conditions for Participation

- An applicant must submit a completed and signed mission application and supplemental application materials, including adequate information on the company's products and/or services, primary market objectives, and goals for participation. If the U.S. Department of Commerce receives an incomplete application, the Department may reject the application, request additional information, or take the lack of information into account when evaluating the applications.
- Each applicant must also certify that the products and services it seeks to export through the mission are either produced in the United States, or, if not, marketed under the name of a U.S. firm and have at least fifty-one percent U.S. content.

Selection Criteria for Participation

Selection will be based on the following criteria:

- Suitability of a company's products or services to the mission's goals
- Applicant's potential for business in Mexico, including likelihood of exports resulting from the trade mission
- Consistency of the applicant's goals and objectives with the stated scope of the trade mission (i.e., the sectors indicated in the mission description)

Referrals from political organizations and any documents containing references to partisan political activities (including political contributions) will be removed from an applicant's submission and not considered during the selection process.

Timeframe for Recruitment and Applications

Mission recruitment will be conducted in an open and public manner, including publication in the **Federal Register**, posting on the Commerce Department trade mission calendar (*http://export.gov/trademissions/*) and other Internet Web sites, press releases to general and trade media, direct mail, industry trade associations and other multiplier

[1] An SME is defined as a firm with 500 or fewer employees or that otherwise qualifies as a small business under SBA regulations (see *http://www.sba.gov/services/contractingopportunities/sizestandardstopics/index.html*). Parent companies, affiliates, and subsidiaries will be considered when determining business size. The dual pricing reflects the Commercial Service's user fee schedule that became effective May 1, 2008 (see *http://www.export.gov/newsletter/march2008/initiatives.html* for additional information).

groups, and publicity at industry meetings, symposia, conferences, and trade shows.

Recruitment for the mission will begin immediately and conclude no later than July 12, 2013. CS Mexico will review all applications on a rolling basis and will inform applicants as they are accepted. Applications received after the July 12, 2013 date will be considered only if space and scheduling constraints permit.

Contacts

U.S. Commercial Service—Mexico

Ms. Monica Martinez, Commercial Specialist, U.S. Commercial Service Mexico—Mexico City, Tel: +52 55 5140–2628, *monica.martinez@trade.gov*

Mr. John Howell, Principal Commercial Officer, U.S. Commercial Service Mexico—Monterrey, Tel: + 52 81 8047–3223, *john.howell@trade.gov*

Ms. Yazmin Rojas, Commercial Specialist, U.S. Commercial Service Mexico—Monterrey, Tel: +52 81 8047–3118, *yazmin.rojas@trade.gov*

U.S. Commercial Service—United States

Ms. Eve Lerman, Senior International Trade Specialist, U.S. Commercial Service—East Michigan, Tel: +1 248 975–9605, *eve.lerman@trade.gov*

Elnora Moye,

Trade Program Assistant.

[FR Doc. 2013–05522 Filed 3–8–13; 8:45 am]

BILLING CODE 3510–DS–P

DEPARTMENT OF COMMERCE

International Trade Administration

Multi-State, Multi-Sector Trade Mission to Colombia; September 9–12, 2013

AGENCY: International Trade Administration, Department of Commerce.

ACTION: Notice.

Mission Description

The United States Department of Commerce, International Trade Administration, U.S. and Foreign Commercial Service (US&FCS), in collaboration with the American Chamber of Commerce in Bogotá, is organizing a Trade Mission to Bogotá, Colombia from September 9–12, 2013. The purpose of this mission is to assist U.S. companies in launching or increasing exports of U.S. goods or services to Colombia. The mission will include business-to-business matchmaking appointments with local companies, as well as market briefings and networking events.

The mission is open to U.S. companies from a cross section of industries with growing potential in Colombia, including, but not limited to safety and security equipment and services, medical equipment, cosmetics, agricultural machinery, and information technology.

Commercial Setting

Why Colombia?

The U.S.-Colombia Trade Promotion Agreement (TPA), which entered into force on May 15, 2012, creates market opportunities for U.S. firms in a number of sectors. The U.S.-Colombia TPA provides duty-free entry for over 80 percent of U.S. consumer and industrial exports to Colombia, with remaining tariffs to be phased out over the next 10 years. The U.S.-Colombia TPA also opens the market for remanufactured goods and provides greater protection for intellectual property rights (IPR). Colombia's traditional acceptance of U.S. brands as well as U.S. and international standards provide a solid foundation for U.S. firms seeking to do business there.

Colombia is the third largest market in Latin America, after Mexico and Brazil, and is ranked 22nd globally as a market for U.S. exports. Over the past 10 years, Colombia has become one of the most stable economies in the region. Improved security, sound government policies, steady economic growth, moderate inflation and a wide range of opportunities make it worthwhile for U.S. exporters to consider Colombia as an export destination. With more than 45 million people, an improved security environment, an abundance of natural resources, and an educated and growing middle-class, business opportunities are booming in Colombia. The country's last two governments implemented policies that took Colombia on the path to global competitiveness, opening it up to global trade and investment for 10 consecutive years. Colombia's strong economic growth, moderate inflation rates, and sound fiscal policies have made it a haven of stability in a time of economic uncertainty. Over the last decade, the country's economy is estimated to have grown over 4% on average; inflation was kept in the single digits and is expected to remain well within the Central Bank of Colombia's 2% to 4% range. Furthermore, the Government's strict fiscal discipline led many international credit agencies to improve Colombia's credit rating to investment grade for the first time in over 10 years. Increasing Foreign Direct Investment (FDI) in Colombia demonstrates Colombia's rise as a business destination. In 2011, FDI into Colombia reached a historic US$13.4 billion from only US$2.4 billion in 2000, a fivefold increase in just ten years, with forecasts of continued growth through the next five years.

By 2011, Colombia's total international trade surpassed US$111 billion, exports reached US$56 billion while imports reached a historic US$55 billion. After implementing free trade agreements (FTAs) with the United States and with Canada, Colombia continues to move aggressively in opening up to trade, seeking to quickly implement FTAs negotiated with the European Union and South Korea, as well as moving ahead in negotiations with countries such as Japan, Turkey, Costa Rica and Israel.

Best Prospects for U.S. Companies

Safety and Security Industry

The safety and security market in Colombia is a very dynamic sector, growing at an estimated rate of 5 to 10% per year. It is also estimated that the total Colombian budget for defense is US$10 billion in 2012 (close to 6% of GDP). The Colombian government is investing heavily in intelligence equipment and services. Market opportunities exist for safety and security industry products such as CCTV cameras, telephones for security, reproduction and record devices for security, data processing equipment, radio transmission, biometric equipment, and communication jammers, among others. Opportunities exist in the defense sector for helicopters and fixed wing parts and maintenance services, unmanned aerial vehicles (UAVs), Improvised Explosive Devices (IEDs) and mine detectors, modern communication systems (MCS), IT-structure platforms, marine and coastal surveillance systems and logistics software solutions and applications, among others. The U.S.-Colombia TPA reduced tariffs for a wide variety of products and services in the safety and security industries.

Medical Equipment

Strong opportunities exist for exports of medical equipment and other health industry-related products and services to Colombia. Following the entry into force of the U.S.-Colombia TPA, approximately 98% of all U.S. medical equipment imports into Colombia are subject to zero tariffs. U.S. imports enjoy the largest share of the local market, accounting for around a third of all medical equipment imports. Currently,

the strongest competitors are companies from Germany and Japan, and companies from China are quickly increasing their market share. The best approach to enter into this market is through distributors.

In 2011, Colombia imported medical equipment & supplies valued at US$985 million, their highest ever level. A few multinationals manufacture in the country. The medical device industry is concentrated around the capital Bogotá. Per capita spending on medical devices is average for the region.

According to a 2012 study by America Economia Intelligence, seven of the twenty best hospitals and clinics in Latin America are located in Colombia, including: Hospital Fundacion Santa Fe in Bogota (4th place); and Fundacion Valle del Lili in Cali, Fundacion Cardioinfantil in Bogota, and Fundacion Cardiovascular de Colombia in Bucaramanga (7th, 8th, and 9th place, respectively).

Cosmetics

Colombia is the fifth largest market for cosmetics in Latin America, following Brazil, Mexico, Argentina and Venezuela. The estimated market size in 2010 was US$ 6.2 million. Local production of cosmetics, toiletries, and personal hygiene products has been growing on an average of 4.4% since 2003. Local production reached US$2.7 million in 2010.

The Colombian cosmetic market is attractive for U.S. companies for various reasons:

- Highest rate of females in the workplace in Latin America. Female participation in the labor force is 44.6% (2007) in Colombia. Women's participation in the labor market has increased over 11% in the past five years;
- Use of free trade zones for cosmetic and toiletry products, with corporate tax benefits;
- Convenient geographic location as a global export hub;
- Zero tariffs on many U.S. products in the cosmetic sector.

Agricultural Equipment

Colombia is the 18th largest market for U.S. agricultural equipment exports. The U.S.-Colombia TPA provided immediate tariff reduction to 0% from 10% on combines, to 0% from 15% on tractors, and reductions on other equipment. The U.S.-Colombia TPA eliminated Colombia's restrictions on the importation of remanufactured goods, and the Government of Colombia is encouraging farmers to participate in lease programs. The agricultural equipment sector accounted for nearly US$19 million in U.S. exports to Colombia over 2008–10 (average) or less than 1 percent of total U.S. industrial exports to Colombia. Colombia has been a net food importer because food production was disrupted by the unstable security environment. With improved security, areas that had gone unfarmed for prolonged periods are now producing, and the agricultural sector in Colombia is likely to continue to grow without affecting natural forests. Barely 8% of the potential arable land is effectively used. The availability of water resources in Colombia is among the highest in the world with nearly 45,202 cubic meters per capita per year which exceeds the South American average and is significantly higher than other regions in North America, Europe and Asia. The Government of Colombia is developing policies to incentivize the agriculture sector in Colombia, which, if carried out, will lead to opportunities for U.S. exporters of agricultural equipment.

Information Technology

Colombia's IT sector has been experiencing very dynamic growth due to government investment in infrastructure, expanding connectivity throughout the country, and transitioning it from being a hardware-demand driven market to a market that incorporates more value-added IT spending. The Ministry of Information Technology and Communications' (MinTIC) is halfway through its broadband expansion plan called Vive Digital, which seeks to provide connectivity to 8 million Colombians throughout the entire country by 2014. While all of the major bids for this process are in the execution phase, the new connectivity environment is very likely to drive up demand for services by households and businesses, which will seek to take advantage of expanded Internet access.

With the expected continuation of an advancing Colombian economy, the establishment of new businesses in the country should continue and even increase, particularly as Colombia moves forward in the implementation of the Free Trade Agreements it has negotiated. This trend should sustain the demand for hardware and software equipment. Additionally, as local companies continue to grow in size and scope of operations, they too are expected to strengthen their IT capabilities with investments in data centers and Customer Relationship Management Solutions, as well as IT Risk Services.

Major government programs led by new entities such as iNNpulsa, are allocating funds for technology modernization programs geared towards small and medium companies, which make up more than 90% of all Colombian businesses, and have been found to have very low rates of technology penetration and connectivity. This, in combination with a reduction in tariffs and taxes, particularly for new equipment such as computers and tablets, demonstrates significant opportunities for U.S. exporters in the IT industries.

Other Products and Services

The foregoing analysis of the above industry sectors in Colombia is not intended to be exhaustive, but illustrative of the many opportunities available to U.S. businesses. Applications from companies selling products or services generally within the scope of this mission will be considered and evaluated by the U.S. Department of Commerce. Companies whose products or services do not fit the scope of the mission may contact their local U.S. Export Assistance Center (USEAC) to learn about other business development missions and export promotion services that may provide more targeted export opportunities. Companies may call 1–800–872–8723, or go to *http://help.export.gov/* to obtain such information. This information also may be found on the Web site: *http://www.export.gov.*

Mission Goals

The goal of the trade mission to Colombia is to help participating firms gain market insights, make industry contacts, solidify business/sector strategies, and advance specific projects, with the goal of increasing U.S. exports to Colombia. Participants will have access to the US&FCS Senior Commercial Officer in Bogotá and to US&FCS Commercial Specialists during the mission. They will learn about the many business opportunities in Colombia, and gain first-hand market exposure. Participants already doing business in Colombia will have opportunities to further advance business relationships and projects in that market. U.S. companies new to Colombia will gain support in finding agents, distributors, and joint venture partners through this mission, laying the foundation for successful long-term ventures by providing business-to-business introductions and market access information.

Mission Scenario

The mission will stop in Bogotá, Colombia. Participants will meet with pre-screened potential agents,

distributors, and representatives, as well as other business partners and government officials. They will also attend market briefings by U.S. Embassy officials and networking events offering further opportunities to speak with local business and industry decision-makers.

PROPOSED TIME TABLE

Monday, September 9, 2013, Bogota, Colombia	Arrival. Market Briefing. Networking reception.
Tuesday, September 10, 2013, Bogota, Colombia	Matchmaking appointments and/or site visits.
Wednesday, September 11, 2013, Bogota, Colombia	Matchmaking appointments.
Thursday, September 12, 2013, Bogota, Colombia	Depart.

Participation Requirements

All parties interested in participating in the Trade Mission to Colombia must complete and submit an application package for consideration by the Department of Commerce. All applicants will be evaluated on their ability to meet certain conditions and best satisfy the selection criteria as outlined below. A minimum of 15 and a maximum of 30 U.S. companies will be selected to participate in the mission from the applicant pool on a first-come, first-served basis. U.S. companies already doing business with Colombia, as well as U.S. companies seeking to enter this market for the first time, may apply.

Fees and Expenses

After a company has been selected to participate on the mission, a payment to the Department of Commerce in the form of a participation fee is required.

- The participation fee will be US$1,995 for a small or medium-sized enterprise (SME) [1] and US$3,040 for a large firm
- The fee for each additional representative is US$450.
- Expenses for travel to and from the mission, lodging, most meals, and incidentals will be the responsibility of each mission participant.

Intergovernmental Cooperation and Assistance for Small Businesses

The U.S. Small Business Administration is partnering with State trade organizations to promote increased trade and exporting through the State Trade and Export Promotion (STEP) program. As part of this program, some States are offering financial assistance for U.S. small businesses to assist them in pursuing export opportunities, such as through participation on a Department of Commerce trade mission. Small businesses interested in more information about the STEP in their State are encouraged to contact their State STEP representative (contact information available by clicking on the interactive map at *www.sba.gov/step*) to learn more about the resources and assistance offered by their State trade organization.

Conditions of Participation

- An applicant must submit a completed and signed mission application and supplemental application materials, including adequate information on the company's products and/or services primary market objectives, and goals for participation. If the Department of Commerce receives an incomplete application, the Department may reject the application, request additional information, or take the lack of information into account when evaluating the applications.
- Each applicant must also certify that the products and services it seeks to export through the mission are either produced in the United States, or, if not, marketed under the name of a U.S. firm and have at least fifty-one percent U.S. content.

Selection Criteria for Participation

Selection will be based on the following criteria, listed in decreasing order of importance:

- Suitability of the company's products or services for the Colombian market
- Company's potential for business in Colombia, including likelihood of exports resulting from the mission
- Consistency of the applicant's goals and objectives with the stated scope of the trade mission

Referrals from political organizations and any documents containing references to partisan political activities (including political contributions) will be removed from an applicant's submission and not considered during the selection process.

Timeframe for Recruitment and Applications

Mission recruitment will be conducted in an open and public manner, including publication in the **Federal Register**, posting on the U.S. Department of Commerce trade mission calendar (*www.export.gov/trademissions*) and other Internet Web sites, press releases to general and trade media, notices by industry trade associations and other multiplier groups, and publicity at industry meetings, symposia, conferences, and trade shows.

Recruitment will begin immediately and conclude no later than Friday, June 7, 2013. The U.S. Department of Commerce will review applications and make selection decisions on a rolling basis beginning [at least two weeks after FR notice date of publication] until the maximum of thirty participants is reached. We will inform all applicants of selection decisions as soon as possible after applications are reviewed. Applications received after the June 7th deadline will be considered only if space and scheduling constraints permit.

How To Apply

Applications can be downloaded from the trade mission Web site or can be obtained by contacting April Redmon or Leandro Solorzano at the U.S. Department of Commerce (see contact details below.) Completed applications should be submitted to April Redmon or Leandro Solorzano.

Contacts

U.S. Commercial Service

Trade Americas Team: Ms. April Redmon, International Trade Specialist, U.S. Commercial Service—Virginia/Washington, DC, 2800 S. Randolph St., Suite 800, Arlington, VA 22206, Tel: 703–756–1704, Email: *April.Redmon@trade.gov.*

Leandro Solorzano, International Trade Specialist, U.S. Commercial

[1] An SME is defined as a firm with 500 or fewer employees or that otherwise qualifies as a small business under SBA regulations (see *http://www.sba.gov/services/contractingopportunities/sizestandardstopics/index.html*). Parent companies, affiliates, and subsidiaries will be considered when determining business size. The dual pricing reflects the Commercial Service's user fee schedule that became effective May 1, 2008 (see *http://www.export.gov/newsletter/march2008/initiatives.html* for additional information).

Service—Ft. Lauderdale, 1850 Eller Dr., Suite 401, Fort Lauderdale, FL 33316, Tel: 954–356–6647, Email: *Leandro.Solorzano@trade.gov.*

U.S. Commercial Service in Colombia: Carlos Suarez, Commercial Specialist, U.S. Commercial Service Bogota, Tel: 011–571–275–2690, Email: *Carlos.Suarez@trade.gov.*

Elnora Moye,

Trade Program Assistant.

[FR Doc. 2013–05507 Filed 3–8–13; 8:45 am]

BILLING CODE 3510–FP–P

DEPARTMENT OF COMMERCE

International Trade Administration

Secretarial Infrastructure Business Development Mission to Brazil, Colombia and Panama; May 12–18, 2013

AGENCY: International Trade Administration, Department of Commerce.

ACTION: Notice.

Mission Description

The United States Secretary of Commerce will lead an Infrastructure Business Development Mission to São Paulo and Brasília, Brazil, Bogotá, Colombia and Panama City, Panama from May 12–18, 2013. This business development mission will promote U.S. exports to Brazil, Colombia and Panama by helping U.S. companies' launch or increase their business for infrastructure markets. The mission will include government and business-to-business meetings, market briefings, and networking events. In all three countries, the governments and private sector are investing significant money in infrastructure projects. As a result, the mission will focus on export-ready U.S. firms in a broad range of leading U.S. infrastructure industrial sectors with an emphasis on project management and engineering services (including construction, architecture and design), transportation (including road/highways, rail, airports and intelligent transportation systems), energy (including distribution, transmission and smart grid) and safety and security.

Companies will have two options to select from when applying for participation in this mission:

- Brazil, Colombia and Panama (May 12–18, 2013)
- Colombia and Panama (May 14–18, 2013)

The delegation will be composed of 20–25 U.S. firms representing the mission's target sectors. Representatives of the Department of Transportation (DOT), the U.S. Trade and Development Agency (USTDA), the Export-Import Bank of the United States (Ex-Im) and the Overseas Private Investment Corporation (OPIC) will be invited to participate to provide information and counseling regarding their suite of programs and services in Latin America.

Commercial Setting

Brazil

The Federative Republic of Brazil is Latin America's biggest economy and is the fifth largest country in the world in terms of land mass and population with about 197 million people and the world's seventh largest economy. Brasília is the nation's capital and seat of government. With almost 20 million people, São Paulo is the largest city in Brazil, the largest city in the southern hemisphere and Americas, and the world's seventh largest city by population. It is the country's economic and financial center and traditional access point for companies entering the Brazilian market.

Brazil is the U.S.'s seventh largest export market and eighth largest trading partner. In 2012, U.S. goods exports to Brazil reached nearly $44 billion, 68% above their 2009 level, and our goods trade surplus was over $11 billion. GDP growth was slower than usual at 2.7% in 2011 and around 1% in 2012. Growth slowed due to reduced demand for Brazilian exports in Europe and Asia, despite solid domestic demand and a growing middle class. It is expected to rebound to over 3% in 2013 and 2014.

Although there are major export opportunities in Brazil, there are also substantial challenges, including relatively high tariffs with a heavy and complex customs system, tax structure, and regulatory framework. Additionally, U.S. exporters face expanding government involvement in the marketplace to promote the development or preservation of Brazilian industries deemed to be strategic, including increased use of local content and technology transfer requirements. It is essential for U.S. companies to have local representation in Brazil to be able to successfully compete with Brazilian and other international firms.

The Growth Acceleration Program, or PAC (Programa de Aceleração do Crescimento) launched in 2007, laid out investment plans of nearly R$504 billion (US$306 billion) until 2010 to solve many long-overdue infrastructure issues as well as prepare for the upcoming 2014 World Cup and 2016 Olympics games for which Brazil expects to invest $12 billion. The PAC 2, released in March of last year, was a continuation of the project that promised infrastructure spending of R$959 billion (US$582 billion) from 2011 to 2014. Infrastructure opportunities for U.S. companies abound, especially in the transportation, energy, environment, ports, and ICT sectors.

Colombia

Colombia ranks solidly with the group of progressive, industrializing countries worldwide that have diversified agriculture, resources, and productive capacities. Despite the global economic crisis, Colombia's economic prospects are positive. In 2011, Colombia enjoyed 5.9% GDP growth and was approximately 4% in 2012. Colombia is attracting record amounts of foreign direct investment (FDI), which is further leading to rapid industrial development, necessitating the need for improved infrastructure. In 2011, Colombia attracted $13 billion in FDI, and early estimates come in at $15 billion in 2012. In addition, per capita income continues to grow as Colombia's middle class has doubled in the past 10 years.

Colombia is the third largest market in the region, after Mexico and Brazil, and is ranked 22nd as a market for U.S. exports globally. Over the past 10 years, Colombia has become one of the most stable economies in the region. Improved security, sound government policies, steady economic growth, moderate inflation and a wide range of opportunities make it worthwhile for U.S. exporters to take a serious look at Colombia.

Bogotá, the capital of Colombia, generates approximately 30% of the country's total GDP. Bogotá offers diverse business opportunities in almost all economic sectors.

The overall improvement in the national safety and security situation in Colombia has allowed the Government to focus on improving its infrastructure development, which along with a boom in the extractive industries, has fueled the growth of U.S. exports to Colombia, including opportunities generated by highway, hotel and housing construction in Bogotá and coastal cities such as Cartagena and Barranquilla. The Government of Colombia has earmarked $26 billion over the next 4 years for primarily road projects. However, on-going and future projects exist in airport modernization, sea and river port developments, and rail line upgrades. In addition, most major cities in Colombia are looking for solutions to improve internal transportation, including mass transit. A recently completed USTDA

reverse intelligent transportation mission highlighted the opportunities that exist in Colombia across the board in transportation infrastructure.

Colombia's traditional acceptance of U.S. brands as well as U.S. and international standards provide a solid foundation for U.S. firms seeking to do business there. Moreover, the entry-into-force of the US-Colombia Free Trade Agreement on May 15, 2012 provided immediate duty-free entry for 80% of U.S. consumer and industrial exports to Colombia, with remaining tariffs to be phased out over the next 10 years. The Agreement also opens the market for remanufactured goods and provides greater protection for intellectual property rights (IPR).

Panama

Panama has historically served as the crossroads of trade for the Americas. Its strategic location as a bridge between two oceans and the meeting of two continents has made Panama not only a maritime and air transport hub, but also an international trading, banking, and services center. Panama's global and regional prominence is being enhanced by recent trade liberalization and privatization, and it is participating actively in the hemispheric movement toward free trade agreements.

Panama's dollar-based economy offers low inflation in comparison with neighboring countries and zero foreign exchange risk. Panama and the U.S. recently implemented a Trade Promotion Agreement (TPA) that will eliminate 86% of tariffs and duties on U.S. industrial exports to Panama upon entry into force. But even before the implementation of the TPA, the U.S. was Panama's most important trading partner, with about 30% of the import market, and U.S. products have enjoyed a high degree of acceptance in Panama. In 2011, U.S. exports to Panama jumped 34% to $8.25 billion—in no small part due to the fact that Panama's economy grew 10.5%. However, international competition for sales is strong across sectors including telecommunications equipment, automobiles and heavy construction equipment to name a few.

Panama now enjoys investment grade rating status, granting the Government of Panama international recognition for recent tax reforms and its record of steady GDP growth while keeping its deficits under control (even in 2009, a dismal year for the world economy, Panama's economy grew 2.9% and the Government of Panama's deficit was only 1% of GDP). Not only does the investment-grade rating lower the cost of borrowing for the Government of Panama, but it sends a strong market signal that Panama, even while carrying a debt ratio that is relatively high, is one of only five Latin American countries to achieve this distinction.

Panama's economy is based primarily on a well-developed services sector, accounting for about 75% of GDP. Services include the Panama Canal, banking, the Colon Free Zone (CFZ), insurance, container ports, and flagship registry. Panama is currently engaged in the Panama Canal expansion project. This project, in conjunction with the expansion of the capacities of its ports on both the Atlantic and Pacific coasts, will solidify Panama's global logistical advantage in the Western Hemisphere.

This logistical platform has aided the success of the CFZ, the second largest in the world after Hong Kong, which has become a vital trading and transshipment center serving the region and the world. CFZ imports—a broad array of luxury goods, electronic products, clothing, and other consumer products—arrive from all over the world to be resold, repackaged, and reshipped, primarily to regional markets.

Other Products and Services

The foregoing analysis of infrastructure export opportunities in Brazil, Colombia and Panama is not intended to be exhaustive, but illustrative of the many opportunities available to U.S. businesses. Applications from companies selling products or services within the scope of this mission will be considered and evaluated by the U.S. Department of Commerce. Companies whose products or services do not fit the scope of the mission may contact their local U.S. Export Assistance Center (USEAC) to learn about other business development missions and export promotion services that may provide more targeted export opportunities. Companies may call 1–800–872–8723, or visit the Web site: *http://www.export.gov* to obtain such information.

Mission Goals

This mission will demonstrate the United States' commitment to a sustained economic partnership with Brazil, Colombia and Panama. The mission's purpose is to support the business development goals for U.S. firms as they construct a firm foundation for future business in Brazil, Colombia and Panama and specifically aims to:

- Assist in identifying potential partners and strategies for U.S. companies to gain access to each market for infrastructure products and services.
- Confirm U.S. Government support for activities of U.S. business in each market and to provide access to senior Brazilian, Colombian and Panamanian government decision makers.
- Listen to the needs, suggestions and experience of individual participants so as to shape appropriate U.S. Government positions regarding U.S. business interests in the region.
- Organize private and focused events with local business and association leaders capable of becoming partners and clients for U.S. firms as they develop their business in the region.
- Assist development of competitive strategies and market access with high level information gathering from private and public-sector leaders.

Mission Scenario

The mission will stop in São Paulo and Brasília, Brazil, Bogotá, Colombia, and Panama City, Panama. In each country, participants will meet with pre-screened potential agents, distributors, and representatives, as well as other business partners and government officials. They will also attend market briefings by U.S. Embassy officials, as well as networking events offering further opportunities to speak with local business and industry decision-makers.

Proposed Time Table

Sunday, May 12	São Paulo, Brazil	Business development mission Orientation. U.S Government Trade Finance Briefing. Brazil Commercial Opportunity Overview. Country Team Briefing. Welcome Dinner.
Monday, May 13	São Paulo, Brazil	Industry Briefings/Roundtable Discussions. One-on-One Business Appointments. Amcham or other Luncheon Speech. Networking Reception.
Tuesday, May 14	São Paulo, Brazil	Industry Briefings/Roundtable Discussions. One-on-One Business Appointments.

	OR Brasília, Brazil	Government Meetings.
	Bogotá, Colombia	No Formal Events.
Wednesday, May 15	Bogotá, Colombia	Colombia Commercial Opportunity Overview. Country Team Briefing. Government Meetings. Networking Reception.
Thursday, May 16	Bogotá, Colombia	Government Meetings. One-on-One Business Appointments. Amcham or other Luncheon Speech.
	Panama City, Panama	Panama Commercial Opportunity Overview. Country Team Briefing. Networking Reception.
Friday, May 17	Panama City, Panama	Government Meetings. One-on-One Business Appointments. Amcham or other Luncheon Speech. Wrap-up Discussion. Closing Dinner.

Participation Requirements

All parties interested in participating in the Secretarial Infrastructure Business Development Mission to Brazil, Colombia and Panama or Colombia and Panama must complete and submit an application package for consideration by the Department of Commerce. All applicants will be evaluated on their ability to meet certain conditions and best satisfy the selection criteria as outlined below. Approximately 20–25 companies will be selected to participate in the mission from the applicant pool. U.S. companies doing business with Brazil, Colombia and Panama, as well as U.S. companies seeking to enter these markets for the first time may apply.

Fees and Expenses

After a company has been selected to participate on the mission, a payment to the Department of Commerce in the form of a participation fee is required. The fee schedule for each mission is below:

Brazil, Colombia and Panama (May 12–18):

- $11,750 for large firms
- $9,750 for a small or medium-sized enterprises (SMEs) [1]
- $2,750 each additional firm representative (large firm or SME)

Colombia and Panama (May 14–18):

- $7,300 for large firms
- $5,900 for a small or medium-sized enterprises (SMEs)
- $1,750 each additional firm representative (large firm or SME)

Expenses for travel, lodging, most meals, and incidentals will be the responsibility of each mission participant. Flight costs between mission stops are included in the participation fee.

Conditions of Participation

An applicant must submit a completed and signed mission application and supplemental application materials, including adequate information on the company's products and/or services, primary market objectives, and goals for participation. If the Department of Commerce receives an incomplete application, the Department may reject the application, request additional information, or take the lack of information into account when evaluating the applications.

Each applicant must also:

- Certify that the products and services it seeks to export through the mission are either produced in the United States, or, if not, marketed under the name of a U.S. firm and have at least 51% U.S. content. In cases where the U.S. content does not exceed 50%, especially where the applicant intends to pursue investment and major project opportunities, the following factors may be considered in determining whether the applicant's participation in the business development mission is in the U.S. national interest:
  - U.S. materials and equipment content;
  - U.S. labor content;
  - Repatriation of profits to the U.S. economy;
  - Potential for follow-on business that would benefit the U.S. economy;
- Certify that the export of the products and services that it wishes to export through the mission would be in compliance with U.S. export controls and regulations;
- Certify that it has identified to the Department of Commerce for its evaluation any business pending before the Department of Commerce that may present the appearance of a conflict of interest;
- Certify that it has identified any pending litigation (including any administrative proceedings) to which it is a party that involves the Department of Commerce; and
- Sign and submit an agreement that it and its affiliates (1) have not and will not engage in the bribery of foreign officials in connection with a company's/participant's involvement in this mission, and (2) maintain and enforce a policy that prohibits the bribery of foreign officials.

Selection Criteria for Participation

Selection will be based on the following criteria, listed in decreasing order of importance:

- Suitability of a company's products or services to the target markets and the likelihood of a participating company's increased exports to or business interests in the target markets as a result of this mission;
- Demonstrated export experience in the target markets and/or other foreign markets;
- Consistency of company's products or services with the scope and desired outcome of the mission's goals;
- Current or pending major project participation; and
- Rank/seniority of the designated company representative.

Additional factors, such as diversity of company size, type, location, and demographics, may also be considered during the review process.

Referrals from political organizations and any documents containing references to partisan political activities (including political contributions) will be removed from an applicant's submission and not considered during the selection process.

[1] An SME is defined as a firm with 500 or fewer employees or that otherwise qualifies as a small business under SBA regulations (see *http://www.sba.gov/services/contractingopportunities/sizestandardstopics/index.html*). Parent companies, affiliates, and subsidiaries will be considered when determining business size. The dual pricing reflects the Commercial Service's user fee schedule that became effective May 1, 2008 (see *http://www.export.gov/newsletter/march2008/initiatives.html* for additional information).

Timeframe for Recruitment and Applications

Mission recruitment will be conducted in an open and public manner, including publication in the **Federal Register** (*https://www.federalregister.gov/*), posting on ITA's business development mission calendar (*http://export.gov/trademissions*) and other Internet Web sites, press releases to general and trade media, direct mail, broadcast fax, notices by industry trade associations and other multiplier groups, and publicity at industry meetings, symposia, conferences, and trade shows.

Recruitment will begin immediately and conclude no later than Friday, March 22, 2013.

The Department of Commerce will evaluate applications and inform applicants of selection decisions at 2 points during the recruitment period. A portion of the participants will be selected each time and informed of their selection as soon as possible in order to allow them to begin preparing for the business development mission. All remaining applications and any additional applications received in the interim will be evaluated simultaneously at the following evaluation. Deadlines for each round of evaluation are as follows:

- Friday, March 8, 2013
- Friday, March 22, 2013

Applications received after the March 22nd deadline will be considered only if space and scheduling constraints permit.

How To Apply

Applications can be downloaded from the business development mission Web site (*http://export.gov/BrazilColombiaPanama2013*) or can be obtained by contacting the Office of Business Liaison (below). Completed applications should be submitted to the Office of Business Liaison at (email: *businessliaison@doc.gov* or fax: 202–482–4054).

Contacts

General Information and Applications: The Office of Business Liaison, 1401 Constitution Avenue NW., Room 5062, Washington, DC 20230, Tel: 202–482–1360, Fax: 202–482–4054, Email: *BusinessLiaison@doc.gov.*

Elnora Moye,

Trade Program Assistant.

[FR Doc. 2013–05508 Filed 3–8–13; 8:45 am]

BILLING CODE 3510–FP–P

DEPARTMENT OF COMMERCE

International Trade Administration

Trade Mission to Central America in Conjunction With the Trade Americas—Opportunities in Central America Conference; July 15–19, 2013

AGENCY: International Trade Administration, Department of Commerce.

ACTION: Notice.

Mission Description

The United States Department of Commerce, International Trade Administration, U.S. and Foreign Commercial Service (USFCS) is organizing a trade mission to Central America, in conjunction with the Trade Americas—Opportunities in Central America Conference in San Jose, Costa Rica. U.S. trade mission delegation member participants will arrive in San Jose on or before July 15 to attend the opening ceremony of the Trade Americas—Opportunities in Central America Conference. Trade mission participants will attend the Conference on July 16. Following the Conference, participants will have the opportunity to participate in one-on-one business appointments arranged by USFCS. The following day, participants may choose to either stay in Costa Rica or travel to El Salvador, Honduras, Guatemala, Belize, or Nicaragua (choosing one) for additional one-on-one business appointments. Each one-on-one business appointment will be with a pre-screened potential buyer, agent, distributor or joint-venture partner. Participants will also be invited to networking events during the mission.

The 2013 Trade Americas—Opportunities in Central America Conference that trade mission delegation members will attend is an Americas focused business conference consisting of regional and industry specific conference sessions as well as pre-arranged consultations with USFCS Commercial Officers with expertise in commercial markets throughout the region.

The mission is open to U.S. companies from a cross section of industries with growing potential in Central America, but is focused on best prospects such as construction equipment/road building machinery, medical equipment and devices/laboratory scientific instruments, and safety and security equipment.

The combination of the Trade Americas—Opportunities in Central America Conference and business-to-business matchmaking opportunities in Costa Rica and another Central American country of the mission participant's choice will provide participants with substantive knowledge and strategies for entering or expanding their business across the Central America region.

Commercial Setting

El Salvador

The United States is El Salvador's leading trade partner. In 2011, El Salvador's Central Bank (BCR) reported that the United States had a 38% import market share, and that 46% of Salvadoran exports go to the United States. El Salvador's other top trading partners are located in Central America. El Salvador offers an open market for U.S. goods and services. Tariffs are relatively low, and were reduced further with the implementation of the Dominican Republic-Central America-United States Free Trade Agreement (CAFTA–DR). The value-added tax (VAT) rate in El Salvador is 13%. El Salvador's strategic location in Central America makes it a good platform for industrial and service investments aimed at re-exports.

Honduras

The United States is the chief trading partner for Honduras, supplying 46.2 percent of Honduran imports and purchasing 33.4 percent of Honduran exports in 2011 (excluding maquila trade). Bilateral trade between the United States and Honduras totaled $10.6 billion in 2011 and U.S. exports to Honduras continued to perform well in 2011 reaching $6.1 billion, an increase of 33 percent over 2010. Located in the heart of Central America, Honduras is the second largest country in the region. Its deep-water port, Puerto Cortés, is the first port in Latin America to qualify under both the Megaports and Container Security Initiatives (CSI), which now facilitate the screening of approximately 90 percent of transatlantic and transpacific cargo prior to importation into the United States.

Guatemala

The United States is Guatemala's main trading partner. Guatemalan GDP reached an estimated $46.8 billion in 2011 and exports from the United States to Guatemala were estimated at $6.2 billion, up approximately 39 percent from 2010. U.S. exports are expected to grow at a similar pace, at an estimated 30% per year, beyond 2013. U.S. products and services enjoy strong name recognition in Guatemala, and U.S. firms have a good reputation in the Guatemalan marketplace.

Costa Rica

The United States is Costa Rica's largest trading partner, accounting for about 40% of Costa Rica's total imports. U.S. products enjoy an excellent reputation for quality and price-competitiveness. Proximity to the Costa Rican market is also a major advantage for U.S. exporters who wish to visit or communicate with potential customers. The proximity facilitates close contacts and strong relationships with clients, both before and after the sale. The same holds true for agents and distributors, who typically represent U.S. exporters in the national market.

Belize

In 2011 and 2012, the U.S. remained Belize's principal trading partner. Belize is a consumer nation, relying heavily on imports. The United States provided over 38% of total Belizean merchandise imports in 2011. In 2011, $190.5 million in Belize's exports were destined for the U.S., and Belize was the destination for $355.7 million in imports from the United States.

Nicaragua

The United States is Nicaragua's largest trading partner, the source of roughly a quarter of Nicaragua's imports and the destination for approximately two-thirds of its exports (including free zone exports). U.S. exports to Nicaragua totaled $1.1 billion in 2011.

Mission Goals

The goal of the mission is to help participating U.S. companies find potential partners, agents, distributors, and joint venture partners in Costa Rica and, if requested, their choice of El Salvador, Honduras, Guatemala, Belize, and Nicaragua, laying the foundation for successful long-term ventures taking advantage of market opportunities in Central America, particularly those expanded by CAFTA–DR. The delegation will have access to USFCS Senior Commercial Officers, Commercial Specialists, and Department of State Economic Officers during the mission from the markets in the region, learn about the expansive business opportunities in Central America, and gain first-hand market exposure. U.S. delegation members already doing business in Central America will have the opportunity to further advance business relationships and explore new transactions in those markets.

Mission Scenario

The mission will include pre-screened individual appointments with potential business partners in any two Central American markets; industry and country market briefings; logistical support; networking with leading industry and government officials; and registration for the Trade Americas—Opportunities in Central America Conference, including conference materials and admission to all sessions and networking events.

U.S. delegation members will arrive in Costa Rica on or before July 15, 2013 to attend the opening ceremony of the Trade Americas—Opportunities in Central America Conference. On July 15–16, 2013 delegation members will participate in the Trade Americas—Opportunities in Central America Conference featuring market briefings on Central America business opportunities by trade and industry experts. On July15, 2013, during the Conference, delegation members will participate in pre-arranged, private consultations with Commercial and Economic Officers from the markets in the region, as well as service providers. On July 17–19, mission participants may stay in Costa Rica for Business-to-Business meetings or travel to El Salvador, Honduras, Guatemala, Belize or Nicaragua (choosing one) for additional business-to-business meetings.

Mission Timetable

July 14 Travel Day
July 15 Registration, Market Briefings, and Networking Reception
July 16 Trade Americas—Opportunities in Central America: Conference and Business Consultations
July 17 Business-to-Business Meetings in Costa Rica
July 18–19 Business-to-Business Meetings in (Choice of one stop):
(1) Honduras (OR)
(2) Guatemala (OR)
(3) El Salvador (OR)
(4) Belize (OR)
(5) Nicaragua
July 20 Travel Day

Participation Requirements

Other Products and Services

The foregoing analysis of export opportunities in Central America is not intended to be exhaustive, but illustrative of the many opportunities available to U.S. businesses. Applications from companies selling products or services generally within the scope of this mission will be considered and evaluated by the U.S. Department of Commerce.

All parties interested in participating in the U.S. and Foreign Commercial Service Trade Mission to Central America must complete and submit an application package for consideration by the Department of Commerce. All applicants will be evaluated on their ability to meet certain conditions and best satisfy the selection criteria as outlined below.

A minimum of 20 and a maximum of 30 companies will be selected to participate in the mission from the applicant pool on a first come, first served basis. Approximately eight companies will be selected to participate in Business-to-Business Meetings on July 17–19 in Costa Rica; 6 firms in Guatemala, and El Salvador; approximately three companies will be selected for Honduras; and approximately two companies will be selected for Belize and Nicaragua. U.S. companies already doing business in, or seeking to enter the market in Costa Rica, El Salvador, Honduras, Guatemala, Belize and/or Nicaragua for the first time may apply.

Fees and Expenses

After a company has been selected to participate on the mission, a payment to the Department of Commerce in the form of a participation fee is required.

For business to business meetings in Costa Rica only (not traveling to an additional trade mission country), the participation fee will be $2,100 for a small or medium-sized enterprise (SME) [1]* and $3,100 for large firms*.

For business-to-business meetings in Costa Rica and another market, i.e. El Salvador OR Honduras OR Guatemala OR Belize OR Nicaragua, the participation fee will be $2,800 for a small or medium-sized enterprise (SME)* and $3,800 for large firms*.

The mission registration fee also includes the Trade Americas—Opportunities in Central America Conference registration fee of $450 for one participant from each firm, market briefing, networking reception, interpreters associated with the conference and business consultations. There will be a $300 fee for each additional firm representative (large firm or SME) that wishes to participate in Business-to-Business meetings after the conference.

Expenses for travel, lodging, most meals, and incidentals (e.g., local

[1] * An SME is defined as a firm with 500 or fewer employees or that otherwise qualifies as a small business under SBA regulations (see *http://www.sba.gov/services/contracting opportunities/sizestandardstopics/index.html*). Parent companies, affiliates, and subsidiaries will be considered when determining business size. The dual pricing reflects the Commercial Service's user fee schedule that became effective May 1, 2008 (see *http://www.export.gov/newsletter/march2008/initiatives.html* for additional information).

transportation, interpreters) will be the responsibility of each mission participant.

Intergovernmental Cooperation and Assistance for Small Businesses

The U.S. Small Business Administration is partnering with State trade organizations to promote increased trade and exporting through the State Trade and Export Promotion (STEP) program. As part of this program, some States are offering financial assistance for U.S. small businesses to assist them in pursuing export opportunities, such as through participation on a Department of Commerce trade mission. Small businesses interested in more information about the STEP in their State are encouraged to contact their State STEP representative (contact information available by clicking on the interactive map at *www.sba.gov/step*) to learn more about the resources and assistance offered by their State trade organization.

Conditions for Participation

- An applicant must submit a completed and signed mission application and supplemental application materials, including adequate information on the company's products and/or services, primary market objectives, and goals for participation. If the Department of Commerce receives an incomplete application, the Department may reject the application, request additional information, or take the lack of information into account when evaluating the applications.
- Each applicant must also certify that the products and services it seeks to export through the mission are either produced in the United States, or, if not, marketed under the name of a U.S. firm and have at least 51 percent U.S. content of the value of the finished product or service.

Selection Criteria for Participation

Selection will be based on the following criteria:

- Suitability of the company's products or services to each of the markets the company has expressed an interest in visiting as part of this trade mission.
- Company's potential for business in each of the markets the company has expressed an interest in visiting as part of this trade mission.
- Consistency of the applicant's goals and objectives with the stated scope of the mission.

Referrals from political organizations and any documents containing references to partisan political activities (including political contributions) will be removed from an applicant's submission and not considered during the selection process.

Timeframe for Recruitment and Applications

Mission recruitment will be conducted in an open and public manner, including publication in the **Federal Register**, posting on the Commerce Department trade mission calendar on *www.export.gov*, the Trade Americas Web page at (*http://export.gov/tradeamericas/tradeevents/trademissions/centralamericajuly2013/index.asp*), and other Internet Web sites, press releases to the general and trade media, direct mail and broadcast fax, notices by industry trade associations and other multiplier groups and announcements at industry meetings, symposia, conferences, and trade shows.

Recruitment for the mission will begin immediately and conclude no later than May 17, 2013. The U.S. Department of Commerce will review applications and make selection decisions on a rolling basis until the maximum of 30 participants are selected beginning March 15, 2013. After May 17, 2013, companies will be considered only if space and scheduling constraints permit.

U.S. Contact Information:

Jessica Gordon, U.S. Export Assistance Center—Jackson, MS, *Jessica.Gordon@trade.gov,* Tel: 601–373–0784

Diego Gattesco, U.S. Export Assistance Center—Wheeling WV, *Diego.Gattesco@trade.gov,* Tel: 304–243–5493

Central America Contact Information:

Angela Dawkins, Commercial Officer, U.S. Commercial Service—El Salvador, *Angela.Dawkins@trade.gov*

Maria Rivera, Regional Commercial Specialist, U.S. Commercial Service—El Salvador, *Maria.Rivera@trade.gov*

Elnora Moye,

Trade Program Assistant.

[FR Doc. 2013–05525 Filed 3–8–13; 8:45 am]

BILLING CODE 3510–FP–P

DEPARTMENT OF COMMERCE

International Trade Administration

U.S. Civil Nuclear Trade Policy Mission to Hanoi, Vietnam & Beijing and Sanmen, China; May 16–23, 2013

AGENCY: International Trade Administration, Department of Commerce.

ACTION: Notice.

Mission Description

The United States Department of Commerce (DOC) International Trade Administration's (ITA) Manufacturing and Services (MAS) and U.S. and Foreign Commercial Service (CS) units are organizing an executive-led Civil Nuclear Trade Policy Mission to Hanoi, Vietnam and to Beijing and Sanmen, China from May 16–23, 2013. Participants may elect to participate in both the Vietnam and China portions of the mission, or only one of these countries. The purpose of the mission is to connect U.S. companies with key contacts in the target markets and to promote market policies and procedures that enable U.S. companies to gain robust access to commercial opportunities in these markets. As an optional day prior to the start of the trade mission, in Hanoi, Vietnam, trade mission participants will have the opportunity to observe the U.S.-Association of Southeast Asian Nations (ASEAN) [1] Energy Cooperation—Subsector Network workshop on civil nuclear power on May 16, 2013.

Vietnam and China offer abundant opportunities to civil nuclear companies. According to the China Nuclear Power Middle and Long Term Plan 2005–2020, China's nuclear power installed capacity will reach 60 million to 70 million kilowatts, and the total investment in the nuclear power market will be more than 450 billion yuan (U.S. $72 billion) by 2020.[2] China's nuclear industry is expected to grow to nearly $300 billion by 2020 and commercial opportunities in Vietnam are currently estimated at $10 billion and are expected to grow to $50 billion by 2030.

The Civil Nuclear Trade Policy Mission offers a timely and cost-effective means for U.S. firms to engage

[1] ASEAN Member countries include, Brunei, Burma, Cambodia, Indonesia, Laos, Malaysia, the Philippines, Singapore, Thailand, and Vietnam. The ASEAN Plan of Action for Energy Cooperation 2010–2015 noted one of its strategic goals as being "regional capacity building in nuclear energy for regulators, operators and relevant educational institutions, among other things through training, workshop, seminar and information exchange."

[2] As reported by the United States Embassy to China in Beijing.

with key stakeholders and to enter the promising Chinese and Vietnamese markets for civil nuclear goods and services. Target subsectors holding high potential for U.S civil nuclear exporters include: Legal and advisory services; engineering, procurement and construction; operators and maintenance providers; component manufacturers; and the fuel subsector, including mining, enrichment, fuel fabrication, transport and storage. There are also opportunities for collaboration on education and research and development with U.S. universities and research institutions. A U.S. government delegation with senior officials from the U.S. Departments of Commerce, Energy and State, as well as the White House, will accompany participants during the mission to serve as advisors and civil nuclear subject matter experts.

This mission will contribute to the President's National Export Initiative (NEI, *www.export.gov/nei*) and the DOC's Civil Nuclear Trade Initiative (CNTI, *http://export.gov/civilnuclear/index.asp*), by assisting U.S. businesses in entering or expanding in international markets, and enhancing U.S. exports.

Eligible mission participants include representatives of U.S. companies from across the civil nuclear supply chain, including entities providing related services to the industry such as universities and research institutions, as well as U.S. trade associations in the civil nuclear industry whose members have both commercial and policy interests in China and Vietnam. The mission will help U.S. companies and U.S. trade associations gain market insights, make industry contacts, solidify business strategies, and identify or advance specific projects with the goal of increasing U.S. civil nuclear exports to China and to Vietnam. The schedule will include business appointments with pre-screened potential buyers, agents, distributors and joint venture partners; meetings with national and regional government officials; and networking events. This mission also will provide venues for senior U.S. government officials and participating organizations to meet with Chinese and Vietnamese officials to discuss timely nuclear issues. The mission will allow U.S. companies and trade associations to be part of an official U.S. government delegation, rather than traveling to China or Vietnam individually, and enhances their ability to secure desired meetings. The delegation will be comprised of at least 15 U.S. companies and trade associations.

In November 2009, President Obama signed a Joint Statement at the first U.S.-ASEAN Leaders' Meeting that included the following: ''the United States proposed that the U.S. Secretary of Energy and the ASEAN Ministers on Energy meet in 2010 to advance energy security and clean energy and to explore cooperation in renewable and alternative energy * * * Under the ASEAN Energy Cooperation—Subsector Network, the U.S. government finalized an energy work plan that includes nuclear. A number of the countries in ASEAN are considering nuclear energy for power generation as a long-term option. The U.S.-ASEAN workshop on civil nuclear power serves as a forum for the U.S. mission participants to gain substantive insights on each of the ten member countries' energy plans, including nuclear developments and planning horizons. In addition, there will be networking opportunities for mission delegates to meet and speak with representatives from the ASEAN member countries.

Commercial Setting

Vietnam: From 2000 until 2012, Vietnam's annual GDP growth rate averaged 6.6 percent, reaching an all-time high of 8.5 percent in December 2007. Its energy mix in 2010 was 38 percent hydro, 31.4 percent gas, 18.5 percent coal, and 12.1 percent other fuels.[3] Demand is growing rapidly, resulting in electricity rationing. Electricity demand growth has been 14 percent per year. In July 2011, in the aftermath of the March 2011 Fukushima accident, the Prime Minister approved the *National Master Plan for Electricity Development for 2011–2020 with the Vision to 2030.* The government specified Ninh Thuan 1 & 2 Nuclear Power Plants (NPP) with a total of eight 1000 MWe reactors coming on line annually from 2020–2027. In March 2012, the Vietnamese government re-stated that it would continue to implement its nuclear power program and deploy the Ninh Thuan NPPs in cooperation with Russia. Vietnam may be the first Southeast Asian country to build a NPP. The goal for this segment of the mission is to help U.S. suppliers establish a ''foothold'' in the Vietnamese market as the country develops its nuclear power program.

China: Since 1979, China's GDP has grown at an average rate of almost ten percent annually and in 2009 China surpassed the United States to become the world's largest energy consumer. Nearly eighty percent of China's electricity is produced from fossil fuel (mostly coal) and 18 percent from hydro, with a small percentage produced from renewable sources. Nuclear power supplies 2 percent of China's electricity. China has the fastest growing nuclear energy program in the world. There are currently 16 reactors in operation and nearly 30 under construction employing technologies from France, Canada, Russia and the United States.[4] In October 2012, Premier Wen Jiabao outlined a modified approach to nuclear power development that takes a steady pace to build NPPs and will comply with new generation safety standards. The revised nuclear capacity target for 2020 is now 58 GWe. During the same timeframe, the State Council approved the *12th Five-Year Plan for Nuclear Safety and Radioactive Pollution Prevention and Vision for 2020,* in which China plans to spend RMB 80 billion ($13 billion) on improving nuclear safety at plants already in operation as well as those currently under construction or planned over the next three years. The planned inland sites have been put on hold until after 2015.

- China has three state-owned enterprises (SOEs) that are permitted to own NPPs:
  - China National Nuclear Corporation (CNNC);
  - China Guangdong Nuclear Power Corporation (CGNPC); and
  - China Power Investment Corporation (CPI)
- China also has set up additional SOEs to undertake NPP construction and other business activities, including:
  - China Nuclear Power Engineering Company;
  - China Guangdong Engineering Company;
  - State Nuclear Power Engineering Company;
  - China Power Investment Nuclear Engineering Company;
  - China Nuclear Engineering and Construction Corporation; and
  - State Nuclear Power Technology Corporation (SNPTC) is undertaking AP1000 technology and developing the CAP1400.

The governmental organizations that are responsible for nuclear energy development in China are the State Council, the National Energy Administration (NEA), the China Atomic Energy Authority (CAEA), and the National Nuclear Safety Administration (NNSA).

[3] Vietnam Atomic Energy Agency's Presentation to IAEA, March 2012.

[4] This information is in accordance with reports from the U.S. Embassy in Beijing and the World Nuclear Association, *http://www.world-nuclear.org/info/inf63.html* (2013).

• The State Council is the highest executive body of state power and administration responsible for carrying out principles and policies as well as the regulations and laws.

• The NEA, an independent ministerial level agency within the National Development and Reform Commission, is responsible for nuclear power development and nuclear industry management;

• The CAEA, an agency under the Ministry of Industry and Information, is responsible for nuclear fuel cycle industry management and nuclear emergency preparedness and response.

• The NNSA under the Ministry of Environment Protection is responsible for nuclear safety regulation and licensing and regulating nuclear installations, components, and materials.

Ultimately, China's long-term nuclear energy policy goals are to establish indigenous assembly, fabrication, and nuclear fuel production capability; maximize domestic manufacturing of power plants and equipment with self-reliance in design and management; and to establish and enhance international cooperation to establish their own reactor market, aimed at exporting its own reactors in the future. However, in the near-term, China will rely on existing equipment and services in the global supply chain.

Mission Goals

The goal of the Civil Nuclear Trade Policy Mission to Vietnam and China is to promote exports of civil nuclear goods and services and encourage market policies and procedures that enable U.S. companies to gain robust access to commercial opportunities in these markets.

In Vietnam, the mission will help U.S. companies and trade associations investigate potential opportunities, and educate Vietnamese stakeholders on U.S. nuclear energy capabilities. The mission also will include a best practices seminar to discuss the challenges countries face when first developing a nuclear energy program. These activities will contain a strong trade promotion component and also seek to address the policy challenges to U.S. civil nuclear energy companies operating or seeking to operate in this country. While in Hanoi, trade mission participants will participate in the U.S.-ASEAN workshop on civil nuclear power, enabling networking opportunities with ASEAN government officials and industry experts and promoting U.S. civil nuclear technologies and services.

In China, the mission will clarify for U.S. companies and trade associations how to access commercial opportunities in various sectors of China's nuclear energy industry, will seek to increase awareness of U.S. nuclear industry capabilities among Chinese government officials at the central and provincial government levels, and will connect U.S. companies and trade associations with appropriate decision-makers.

Mission Scenario [5]

Prior to the start of the trade mission, on May 16 in Hanoi, trade mission participants will have the option to observe the U.S.-ASEAN civil nuclear power workshop. The workshop will include five panel sessions on topics ranging from nuclear infrastructure to waste management and fuel services, and a discussion on the essential elements in developing a safe and secure nuclear power program. ASEAN representatives will discuss the appropriateness of new technologies to their country's particular circumstances and learn about developing a robust regulatory and legal framework for safety and liability.

On May 17 in Hanoi, trade mission participants will receive a U.S. Embassy briefing, and meet with senior Vietnamese officials at the Ministry of Science and Technology, the Ministry of Industry and Trade, and executives from Electricity Vietnam. Participants will attend a luncheon with remarks by the Commerce official leading the trade mission, the U.S. Ambassador to Vietnam and officials from the Government of Vietnam (GOV). In addition, there will be a seminar on best practices where trade mission participants will share their experience from projects in other markets and Vietnamese participants will discuss opportunities for U.S. companies in Vietnam. Vietnamese participants in the seminar on best practices include: Vietnam Atomic Energy Institute (VINATOM), Vietnam Agency for Radiation and Nuclear Safety and Control (VARANS), Electricity Vietnam (EVN), and the Ministry of Industry and Trade. In the evening, mission participants will meet with Vietnamese Prime Minister Nguyen Tan Dung and attend a farewell dinner with the U.S. government delegation, Vietnamese government officials and mission participants.

On May 20 in Beijing, trade mission participants will participate in an Embassy briefing, meet with Chinese government officials (NEA, CAEA, NNSA, Ministry of Commerce, CNNC, SNPTC, CPI and CGNPC) and take part in business appointments with private-sector organizations. In addition, they will enjoy a networking reception hosted by U.S. Ambassador Gary Locke and attended by representatives of Chinese industry and government officials and other key stakeholders.

On May 23 in Sanmen, trade mission participants will have meetings with key civil nuclear Chinese government and industry officials and visit the Sanmen AP1000 nuclear power plant.

A U.S. government delegation, which will include senior officials from the U.S. Departments of Commerce, Energy and State, and the White House, will accompany participants during the mission. Trade mission participants will be counseled before and after the mission by CS China and CS Vietnam staff and other federal agencies actively involved in nuclear energy trade promotion activities in Vietnam and China.

PROPOSED TIMETABLE FOR THE U.S.-ASEAN WORKSHOP (OPTIONAL)

[Note that specific events and meeting times have yet to be confirmed]

Date	Location	Activity
Wednesday, May 15	Hanoi	Arrive and check-in at hotel.
Thursday, May 16, *Optional Day*.	Hanoi	ASEAN Nuclear Energy Cooperation-Subsector Network's (NEC–SSN) U.S.-ASEAN Workshop on Civil Nuclear Power: "The Essential Elements of Developing a Safe and Secure Nuclear Power Program" followed by an evening reception and networking event.
		Arrive and check-in at hotel (for participants not attending the U.S.-ASEAN Workshop).

[5] Subject to availability and confirmation.

PROPOSED TIMETABLE FOR U.S. MISSION TO VIETNAM AND CHINA

[Note that specific events and meeting times have yet to be confirmed]

Date	Location	Activity
Friday, May 17, *Day 1* ...	Hanoi	Morning: • U.S. Embassy Briefing. • Visit Ministry of Science and Technology. • Visit Ministry of Industry and Trade. • Visit with Electricity Vietnam. Luncheon: with remarks by Trade Mission Leader, Ambassador Shear, and Government of Vietnam. Afternoon: Seminar on Best Practices—U.S. delegates share experience from projects in other markets. • Vietnamese participants include: Vietnam Atomic Energy Institute (VINATOM), Vietnam Agency for Radiation and Nuclear Safety and Control (VARANS), Electricity Vietnam (EVN), Ministry of Industry and Trade. Evening: • Meeting with Prime Minister Nguyen Tan Dung. • Farewell Dinner with Delegates.
Saturday, May 18, *Day 2*	Hanoi	Delegates on their own.
Sunday, May 19, *Day 3*	Beijing	Arrive Beijing. Check in at hotel. Welcome reception and U.S. Embassy Briefing (organizations, U.S. government delegation, Embassy staff).
Monday, May 20, *Day 4*	Beijing	Morning: Beijing government meetings to include: NEA, CAEA, NNSA, MOFCOM. Afternoon: Government meetings. Evening: Networking reception hosted by Amb. Locke.
Tuesday, May 21, *Day 5*	Beijing	Morning: Industry meetings. Afternoon: Government meetings with CNNC, SNPTC, CGNPC, CPI. Evening: Open.
Wednesday, May 22, *Day 6*.	Beijing-Ningbo ..	Morning: Industry meetings. Afternoon: Train/plane to Ningbo, bus to Sanmen. Evening: Dinner with CNNC.
Thursday, May 23, *Day 7*.	Ningbo	AP1000 site visit. End of Mission.

(NB: The precise schedule will depend on availability of local government officials and business managers, and the specific goals of participants.)

Participation Requirements

U.S. companies and U.S. trade associations interested in participating in the trade mission must complete and submit an application package for consideration by the DOC. All applicants will be evaluated on their ability to meet certain conditions and best satisfy the selection criteria as outlined below. A minimum of 15 and maximum of 20 companies and/or trade associations will be selected to participate in the mission from the applicant pool. U.S. companies or trade associations already doing business with China and/or Vietnam, as well as those seeking to enter these markets for the first time, may apply.

Fees and Expenses

After a company or organization has been selected to participate on the mission, a payment to the DOC in the form of a participation fee is required. U.S. companies and organizations may elect to participate in both the Vietnam and China portions of the mission, or one of the countries. Participants will be able to take advantage of U.S. Embassy rates for hotel rooms.

• The fee to participate in the mission to China and Vietnam is *$5500* for a small or medium-sized company (SME) [6] or for a trade association, and *$7000* for a large company. The fee for each additional representative (large company, trade association, or SME) is *$1300.*

• The fee to participate in the China portion only is *$4000* for an SME or trade association and *$4800* for a large company. The fee for each additional representative (large company, trade association, or SME) is *$800.* This fee also includes the cost of transportation from Beijing to Sanmen.

• The fee to participate in the Vietnam portion only is *$1500* for an SME or trade association and *$2200* for a large company. The fee for each additional representative (large company, trade association, or SME) is *$500.*

Exclusions

The mission fee does not include any personal travel expenses such as lodging, most meals, local ground transportation, except as stated in the proposed timetable, and air transportation from the United States to the mission sites and return to the United States. Business visas may be required. Government fees and processing expenses to obtain such visas also are not included in the mission costs. However, the DOC will provide instructions to each participant on the procedures required to obtain necessary business visas.

Conditions for Participation

Applicants must submit a completed mission application signed by a company or trade association official, together with supplemental application materials, including adequate information on the organization's

[6] An SME is defined as a firm with 500 or fewer employees or that otherwise qualifies as a small business under SBA regulations *(see http://www.sba.gov/services/contracting opportunities/sizestandardstopics/index.html).* Parent companies, affiliates, and subsidiaries will be considered when determining business size. The dual pricing reflects the Commercial Service's user fee schedule that became effective May 1, 2008 (see *http://www.export.gov/newsletter/march2008/initiatives.html* for additional information).

products and/or services, primary market objectives, and goals for participation. If the DOC receives an incomplete application, the DOC may reject the application, request additional information, or take the lack of information into account in its evaluation.

Each applicant also must certify that the products or services it seeks to export through the mission are either produced in the United States, or, if not, marketed under the name of a U.S. firm and have demonstrable U.S. content of the value of the finished product or service. In the case of a trade association or trade organization, the applicant must certify that, for each company to be represented by the trade association or trade organization, the products and services the represented company seeks to export are either produced in the United States, or, if not, marketed under the name of a U.S. firm and have demonstrable U.S. content.

Selection Criteria

Preference will be given to applicants who plan to participate in both the Vietnam and China mission stops. Selection will be based on the following criteria:

- Suitability of the company's (or, in the case of a trade association, represented companies') products or services to each of the markets the company or trade association has expressed an interest in visiting as part of this trade mission.
- The company's (or, in the case of a trade association, represented companies') potential for business in the region and in each of the markets the company or trade association has expressed an interest in visiting as part of this trade mission, including likelihood of exports resulting from the mission.
- Consistency of the applicant company's (or, in the case of a trade association, represented companies') goals and objectives with the stated mission scope.

Diversity of company size, sector or subsector, and location also may be considered in the review process.

Referrals from political organizations and any documents containing references to partisan political activities (including political contributions) will be removed from an applicant's submission and will not be considered.

Timeline for Recruitment and Application

Mission recruitment will be conducted in an open and public manner, including publication in the **Federal Register**, posting on the DOC trade mission calendar (*http://export.gov/trademissions*) and other Internet Web sites (including the Civil Nuclear Exporters Portal at *www.export.gov/civilnuclear*), press releases to general and trade media, direct mail, notices by industry trade associations and other multiplier groups, and publicity at industry meetings, symposia, conferences, and trade shows. Recruitment will begin immediately and conclude no later than April 15, 2013. The DOC will review applications and make selection decisions on a rolling basis by April 20, 2013. Applications received after April 15, 2013 will be considered only if space and scheduling permits.

Contacts

David Kincaid, Manufacturing and Services, Office of Energy and Environmental Industries, Washington, DC, Tel: (202) 482–1706, Email: *David.Kincaid@trade.gov.*

Jonathan Chesebro, Manufacturing and Services, Office of Energy and Environmental Industries, Washington, DC, Tel: (202) 482–1297, Email: *Jonathan.Chesebro@trade.gov.*

Elnora Moye,

Trade Program Assistant.

[FR Doc. 2013–05521 Filed 3–8–13; 8:45 am]

BILLING CODE 3510–FP–P

DEPARTMENT OF COMMERCE

National Oceanic and Atmospheric Administration

Proposed Information Collection; Comment Request; Pilot Project Assessing Economic Benefits of Marine Debris Removal

AGENCY: National Oceanic and Atmospheric Administration (NOAA), Commerce.

ACTION: Notice.

SUMMARY: The Department of Commerce, as part of its continuing effort to reduce paperwork and respondent burden, invites the general public and other Federal agencies to take this opportunity to comment on proposed and/or continuing information collections, as required by the Paperwork Reduction Act of 1995.

DATES: Written comments must be submitted on or before May 10, 2013.

ADDRESSES: Direct all written comments to Jennifer Jessup, Departmental Paperwork Clearance Officer, Department of Commerce, Room 6616, 14th and Constitution Avenue NW., Washington, DC 20230 (or via the Internet at *JJessup@doc.gov*).

FOR FURTHER INFORMATION CONTACT: Requests for additional information or copies of the information collection instrument and instructions should be directed to Jason Landrum, (301) 713–2989 or *Jason.Landrum@noaa.gov.*

SUPPLEMENTARY INFORMATION:

I. Abstract

This request is for a new information collection.

Under the authority of the Marine Debris Research, Prevention, and Reduction Act (Marine Debris Act of 2012, 33 U.S.C. 1951 et seq., as amended by Title VI of Public Law 112–213), NOAA's Marine Debris Division (MDD) is conducting a pilot project designed to assess the economic benefits to beach visitors of marine debris removal. The project will use a revealed preference valuation approach (a random utility travel cost model) to assess benefits associated with marine debris removal at selected beaches in Southern California. The MDD intends to conduct a mail survey of Orange County, California households in order to gather beach trip data required to estimate the model. The pilot project will provide information for use in assessing and prioritizing future efforts to reduce or remove marine debris. The project will also lay the groundwork for additional research related to economic benefits, providing information about the types of marine debris that beach visitors are concerned about and about potential economic modeling challenges.

II. Method of Collection

Respondents will provide information on paper forms, which will be transmitted by mail.

III. Data

OMB Control Number: None.

Form Number: None.

Type of Review: Regular submission (new information collection).

Affected Public: Individuals or households.

Estimated Number of Respondents: Primary survey, 1,200 respondents; non-respondent follow-up survey, 120 respondents.

Estimated Time per Response: Primary survey, 20 minutes; non-respondent follow-up survey, 5 minutes.

Estimated Total Annual Burden Hours: 410 hours.

Estimated Total Annual Cost to Public: $0 in recordkeeping/reporting costs.

IV. Request for Comments

Comments are invited on: (a) Whether the proposed collection of information

is necessary for the proper performance of the functions of the agency, including whether the information shall have practical utility; (b) the accuracy of the agency's estimate of the burden (including hours and cost) of the proposed collection of information; (c) ways to enhance the quality, utility, and clarity of the information to be collected; and (d) ways to minimize the burden of the collection of information on respondents, including through the use of automated collection techniques or other forms of information technology.

Comments submitted in response to this notice will be summarized and/or included in the request for OMB approval of this information collection; they also will become a matter of public record.

Dated: March 6, 2013.

Gwellnar Banks,

Management Analyst, Office of the Chief Information Officer.

[FR Doc. 2013–05551 Filed 3–8–13; 8:45 am]

BILLING CODE 3510–JE–P

DEPARTMENT OF COMMERCE

National Oceanic and Atmospheric Administration

RIN 0648–XC534

Caribbean Fishery Management Council; Public Meetings

AGENCY: National Marine Fisheries Service (NMFS), National Oceanic and Atmospheric Administration (NOAA), Commerce.

ACTION: Notice of public meetings.

SUMMARY: The Caribbean Fishery Management Council (Council) and its Administrative Committee will hold meetings.

DATES: The meetings will be held on March 26–27, 2013. The Council will convene on Tuesday, March 26, 2013 from 9 a.m. to 5 p.m., and the Administrative Committee will meet from 5:15 p.m. to 6 p.m. The Council will reconvene on Wednesday, March 27, 2012, from 9 a.m. to 5 p.m.

ADDRESSES: The meeting will be held at the Buccaneer Hotel, 7 Estate Shoys, Christiansted, St. Croix U.S.V.I.

FOR FURTHER INFORMATION CONTACT: Caribbean Fishery Management Council, 270 Muñoz Rivera Avenue, Suite 401, San Juan, Puerto Rico 00918, telephone: (787) 766–5926.

SUPPLEMENTARY INFORMATION: The Council will hold its 145th regular Council Meeting to discuss the items contained in the following agenda:

March 26, 2013, 9 a.m.–5 p.m.

- Call to Order
- Adoption of Agenda
- Consideration of 144th Council Meeting Verbatim Transcriptions
- Executive Director's Report
- Fishery Management Plan for Queen Conch Resources of Puerto Rico and the U.S. Virgin Islands: Compatibility of Trip and Bag Limits
  - —Summary of Public Hearings
  - —Public Comment Period (30 minutes, additional time could be allowed by the Chairperson)
  - —Council Decision
  - —Final Action
- Development of Island-Based Fishery Management Plans (FMPs) in the U.S. Caribbean: Transition from Species-Based FMPs to Island-Based FMPs
  - —Presentation on Issues, e.g., OY/MSY, Among Others—Graciela García-Moliner/Bill Arnold
  - —Next Steps
- Exempted Fishing Permits (EFP) Report
  - —Puerto Rico
  - —U.S.V.I
- Addressing Compatibility Issues for Bajo de Sico-Abrir La Sierra-Tourmaline off the West Coast of Puerto Rico—Graciela García-Moliner/Bill Arnold
  - —Shared Jurisdictions: Bajo de Sico and Tourmaline
  - —Seasonal Area Closures Differences in Months
- SEFSC Queen Snapper and Red Hind Data Evaluation Update
- SEDAR Update: Red Hind and White Grunt

Public Comment Period (5-Minutes Presentations)

March 26, 2013, 5:15 p.m.–6 p.m.

- Administrative Committee Meeting
  - —Budget Update FY 2013/14
  - —SSC/AP Memberships
  - —Other Business

March 27, 2013, 9 a.m.–5 p.m.

- Essential Fish Habitat Update—Graciela García-Moliner
- Scientific and Statistical Committee Report—Barbara Kojis
  - —Research Priorities
  - —Scientific Strategic Plan Update
- Presentation on Regulatory Reorganization (SERO)—Bill Arnold/Phil Steele
- Trap Reduction Project Report
  - —USVI Trap Fishery Control Date
- Report on Trap Vents—David Olsen
- Spiny Lobster Project Update—David Olsen
- Electronic Reporting for Fish Dealers U.S. Caribbean
- Enforcement Issues:
  - —Follow up on Outreach and Education Enforcement
  - —Reports:
  - —Puerto Rico—DNER
  - —Commercial-Recreational Fishing Licenses/Permits
  - —Letter from Victor Padilla Re: Trap Poaching in the EEZ and Local Waters
  - —U.S. Virgin Islands—DPNR
  - —NOAA/NMFS
  - —U.S. Coast Guard
- Administrative Committee Recommendations
- Meetings Attended by Council Members and Staff

Public Comment Period (5-Minute Presentations)

- Other Business
- Next Council Meeting

The established times for addressing items on the agenda may be adjusted as necessary to accommodate the timely completion of discussion relevant to the agenda items. To further accommodate discussion and completion of all items on the agenda, the meeting may be extended from, or completed prior to the date established in this notice.

The meetings are open to the public, and will be conducted in English. Fishers and other interested persons are invited to attend and participate with oral or written statements regarding agenda issues.

Although non-emergency issues not contained in this agenda may come before this group for discussion, those issues may not be subjects for formal action during this meeting. Actions will be restricted to those issues specifically identified in this notice, and any issues arising after publication of this notice that require emergency action under section 305(c) of the Magnuson-Stevens Fishery Conservation and Management Act, provided that the public has been notified of the Council's intent to take final action to address the emergency.

Special Accommodations

These meetings are physically accessible to people with disabilities. For more information or request for sign language interpretation and/other auxiliary aids, please contact Mr. Miguel A. Rolón, Executive Director, Caribbean Fishery Management Council, 270 Muñoz Rivera Avenue, Suite 401, San Juan, Puerto Rico 00918, telephone (787) 766–5926, at least 5 days prior to the meeting date.

Dated: March 5, 2013.

Tracey L. Thompson,

Acting Deputy Director, Office of Sustainable Fisheries, National Marine Fisheries Service.

[FR Doc. 2013–05533 Filed 3–8–13; 8:45 am]

BILLING CODE 3510–22–P

DEPARTMENT OF COMMERCE

National Telecommunications and Information Administration

First Responder Network Authority Board Special Meeting

AGENCY: National Telecommunications and Information Administration, U.S. Department of Commerce.

ACTION: Notice of Public Meeting of the First Responder Network Authority.

SUMMARY: The Board of the First Responder Network Authority (FirstNet) will hold a Special Meeting via telephone conference (teleconference) on March 18, 2013.

DATES: The Special Meeting will be held on Monday, March 18, 2013, from 12:00 p.m. to 1:00 p.m. Eastern Daylight Time.

ADDRESSES: The Special Meeting will be conducted via teleconference. Members of the public may listen to the meeting by dialing toll-free 1 (888) 282–0378 and entering passcode 7383732. Due to the limited number of ports, attendance via teleconference will be on a first-come, first-served basis.

FOR FURTHER INFORMATION CONTACT: Uzoma Onyeije, Secretary, FirstNet, U.S. Department of Commerce, 1401 Constitution Avenue NW., Washington, DC 20230: telephone (202) 482–0016; email *uonyeije@ntia.doc.gov.* Please direct media inquiries to NTIA's Office of Public Affairs, (202) 482–7002.

SUPPLEMENTARY INFORMATION: *Background:* The Middle Class Tax Relief and Job Creation Act of 2012 (Act), Public Law 112–96, 126 Stat. 156 (2012), created FirstNet as an independent authority within the NTIA. The Act directs FirstNet to establish a single nationwide, interoperable public safety broadband network. The FirstNet Board is responsible for making strategic decisions regarding FirstNet's operations. As provided in section 4.08 of the FirstNet Bylaws, the Board through this Notice provides at least two days' notice of a Special Meeting of the Board to be held on March 18, 2013. The Board may, by a majority vote, close a portion of the Special Meeting as necessary to preserve the confidentiality of commercial or financial information that is privileged or confidential, to discuss personnel matters, or to discuss legal matters affecting FirstNet, including pending or potential litigation. *See 47 U.S.C. 1424*(e)(2).

Matters to Be Considered: NTIA will post an agenda for the Special Meeting on its Web site, *http://www.ntia.doc.gov*, prior to the meeting. The agenda topics are subject to change.

Time and Date: The Special Meeting will be held on March 18, 2013, from 12:00 p.m. to 1:00 p.m. Eastern Daylight Time. The times and dates are subject to change. Please refer to NTIA's Web site, *http://www.ntia.doc.gov*, for the most up-to-date information.

Other Information: The teleconference for the Special Meeting is open to the public. On the date and time of the Special Meeting, members of the public may call toll-free 1 (888) 282–0378 and enter passcode 7383732 to listen to the meeting. If you experience technical difficulty, please contact Helen Shaw by telephone (202) 482–1157; or via email *hshaw@ntia.doc.gov.* Public access will be limited to listen-only. Due to the limited number of ports, attendance via teleconference will be on a first-come, first-served basis. The Special Meeting is accessible to people with disabilities. Individuals requiring accommodations are asked to notify Mr. Onyeije, by telephone (202) 482–0016 or email *uonyeije@ntia.doc.gov,* at least two days (2) business days before the meeting.

Records: NTIA maintains records of all Board proceedings. Board minutes will be available at *http://www.ntia.doc.gov/category/firstnet.*

Dated: March 5, 2013.

Kathy D. Smith,

Chief Counsel.

[FR Doc. 2013–05527 Filed 3–8–13; 8:45 am]

BILLING CODE 3510–60–P

COMMISSION OF FINE ARTS

Notice of Meeting

The next meeting of the U.S. Commission of Fine Arts is scheduled for 21 March 2013, at 10:00 a.m. in the Commission offices at the National Building Museum, Suite 312, Judiciary Square, 401 F Street NW., Washington DC, 20001–2728. Items of discussion may include buildings, parks, and memorials.

Draft agendas and additional information regarding the Commission are available on our Web site: *www.cfa.gov*. Inquiries regarding the agenda and requests to submit written or oral statements should be addressed to Thomas Luebke, Secretary, U.S. Commission of Fine Arts, at the above address; by emailing *CFAStaff@cfa.gov*; or by calling 202–504–2200. Individuals requiring sign language interpretation for the hearing impaired should contact the Secretary at least 10 days before the meeting date.

Dated: February 28, 2013 in Washington, DC.

Thomas Luebke,

AIA, Secretary.

[FR Doc. 2013–05298 Filed 3–8–13; 8:45 am]

BILLING CODE 6330–01–M

DEPARTMENT OF EDUCATION

[Docket No.: ED–2012–ICCD–0040]

Agency Information Collection Activities; Submission to the Office of Management and Budget for Review and Approval; Comment Request; State of Preschool Survey 2013–2015

AGENCY: Institute of Education Sciences (IES), ED.

ACTION: Notice.

SUMMARY: In accordance with the Paperwork Reduction Act of 1995, the Department of Education (ED) is proposing a new information collection.

DATES: Interested persons are invited to submit comments on or before April 10, 2013.

ADDRESSES: Comments submitted in response to this notice should be submitted electronically through the Federal eRulemaking Portal at *http://www.regulations.gov* by selecting Docket ID number ED–2012–ICCD–0040 or via postal mail, commercial delivery, or hand delivery. *Please note that comments submitted by fax or email and those submitted after the comment period will not be accepted.* Written requests for information or comments submitted by postal mail or delivery should be addressed to the Director of the Information Collection Clearance Division, U.S. Department of Education, 400 Maryland Avenue SW., LBJ, Room 2E105, Washington, DC 20202–4537.

FOR FURTHER INFORMATION CONTACT: Electronically mail *ICDocketMgr@ed.gov.* Please do not send comments here.

SUPPLEMENTARY INFORMATION: The Department of Education (ED), in accordance with the Paperwork Reduction Act of 1995 (PRA) (44 U.S.C. 3506(c)(2)(A)), provides the general public and Federal agencies with an opportunity to comment on proposed, revised, and continuing collections of information. This helps the Department assess the impact of its information collection requirements and minimize the public's reporting burden. It also helps the public understand the

Department's information collection requirements and provide the requested data in the desired format. ED is soliciting comments on the proposed information collection request (ICR) that is described below. The Department of Education is especially interested in public comment addressing the following issues: (1) Is this collection necessary to the proper functions of the Department; (2) will this information be processed and used in a timely manner; (3) is the estimate of burden accurate; (4) how might the Department enhance the quality, utility, and clarity of the information to be collected; and (5) how might the Department minimize the burden of this collection on the respondents, including through the use of information technology. Please note that written comments received in response to this notice will be considered public records.

Title of Collection: State of Preschool Survey 2013–2015.

OMB Control Number: 1850–NEW.

Type of Review: New information collection.

Respondents/Affected Public: State, Local or Tribal Governments.

Total Estimated Number of Annual Responses: 53.

Total Estimated Number of Annual Burden Hours: 636.

Abstract: The National Center for Education Statistics (NCES), within the Institute of Education Sciences (IES) of the U.S. Department of Education (ED), is seeking approval to conduct in 2013, 2014, and 2015 the annual, web-based State of Preschool survey, which centralizes data about publicly provided early childhood education opportunities. Data are collected from state agencies responsible for providing early childhood education and made available for secondary analyses. Data collected as part of the survey focus on enrollment counts in state-funded early childhood education programs, funding provided by the states for these programs, and program monitoring and licensing policies. The collected data are then reported, both separately and in combination with extant data available from federal agencies supporting early childhood education programs such as Head Start and the U.S. Census Bureau. Data from the U.S. Census Bureau form the basis for some of the rates developed for the State of Preschool reports. The data and annual report resulting from the State of Preschool data collection provide a key information resource for research and for federal and state policy on publicly funded early childhood education.

Dated: March 5, 2013.

Stephanie Valentine,

Acting Director, Information Collection Clearance Division, Privacy, Information and Records Management Services, Office of Management.

[FR Doc. 2013–05541 Filed 3–8–13; 8:45 am]

BILLING CODE 4000–01–P

DEPARTMENT OF ENERGY

DOE's Preferred Alternative for Certain Tanks Evaluated in the Final Tank Closure and Waste Management Environmental Impact Statement for the Hanford Site, Richland, Washington

AGENCY: U.S. Department of Energy (DOE).

ACTION: Notice of DOE's preferred alternative.

SUMMARY: The U.S. Department of Energy (DOE) is announcing its preferred alternative for wastes contained in underground radioactive waste storage tanks evaluated in the *Final Tank Closure and Waste Management Environmental Impact Statement for the Hanford Site, Richland, Washington* (Final TC & WM EIS, DOE/EIS–0391, December 2012). With regard to those wastes that, in the future, may be properly and legally classified as mixed transuranic waste (mixed TRU waste) [1] DOE's preferred alternative is to retrieve, treat, package, and characterize and certify the wastes for disposal at the Waste Isolation Pilot Plant (WIPP) in Carlsbad, New Mexico, a geologic repository for the disposal of mixed TRU waste generated by atomic energy defense activities. This Notice supplements DOE's expression of its preferred alternatives identified in the Final TC & WM EIS in Section S.7 of the Summary, and in Chapter 2, Section 2.12, of Volume 1. (Also see **SUPPLEMENTARY INFORMATION.**)

ADDRESSES: Copies of the Final TC & WM EIS (paper or electronic) may be obtained by contacting: Ms. Mary Beth Burandt, NEPA Document Manager, Office of River Protection, U.S. Department of Energy, P.O. Box 1178, Richland, Washington 99352, Email: *TC&WMEIS@saic.com.*

The Final TC & WM EIS and its DOE Notice of Availability are available on the DOE NEPA Web site at *http://energy.gov/nepa.* Additional information on the Final TC & WM EIS is also available through the Hanford Web site at *http://www.hanford.gov/.*

FOR FURTHER INFORMATION CONTACT: For further information on the Final TC & WM EIS, contact Ms. Burandt as listed in **ADDRESSES** or by telephone at 1–888–829–6347. For general information regarding the DOE NEPA process, contact: Ms. Carol M. Borgstrom, Director, Office of NEPA Policy and Compliance, GC–54, U.S. Department of Energy, 1000 Independence Avenue SW, Washington, DC 20585, Telephone: 202–586–4600, or leave a message at 1–800–472–2756, Email: *askNEPA@hq.doe.gov.*

For further information about DOE's preferred alternative for the tanks discussed herein, contact: Mr. Todd Shrader, U.S. Department of Energy, 1000 Independence Avenue SW., Washington, DC 20585, Telephone: 202–586–3784.

SUPPLEMENTARY INFORMATION:

Background

The Hanford Site, located in southeastern Washington State along the Columbia River, is approximately 586 square miles in size. Hanford's mission from the early 1940s to approximately 1989 included defense-related nuclear research, development, and weapons production activities. These activities created a wide variety of chemical and radioactive wastes. Hanford's mission now is focused on the cleanup of those wastes and ultimate closure of the Site.

To support its decision making process, DOE prepared the TC & WM EIS pursuant to the National Environmental Policy Act (NEPA) and in accordance with Council on Environmental Quality and DOE NEPA implementing regulations (40 CFR Parts 1500–1508; 10 CFR Part 1021); the U.S. Environmental Protection Agency and the Washington State Department of Ecology are cooperating agencies on this EIS. The TC & WM EIS addresses proposed actions in three major areas: The retrieval and treatment of waste from 177 underground radioactive waste storage tanks, including 149 single-shell tanks (SSTs), and closure of the SSTs; decommissioning the Fast Flux Test Facility and its auxiliary facilities; and continued and expanded management of low-level radioactive waste and mixed low-level radioactive waste.

[1] Transuranic (TRU) waste is waste that contains alpha particle-emitting radionuclides with atomic numbers greater than that of uranium (92) and half-lives greater than 20 years in concentrations greater than 100 nanocuries per gram of waste. ''Mixed waste'' is radioactive waste containing hazardous constituents regulated under the Resource Conservation and Recovery Act.

TC & WM EIS Evaluation of Candidate Tank Waste for Classification as Mixed TRU Waste

This notice pertains only to the retrieval, treatment, packaging, and characterization and certification, for disposal at WIPP, of wastes contained in the 20 tanks evaluated in the TC & WM EIS as being candidates for classification as mixed TRU waste. The total volume of waste in these tanks is approximately 3.1 million gallons, all of which the EIS evaluations assumed to be mixed TRU waste for the purposes of analysis. Currently, DOE has not classified any of the waste as mixed TRU waste. The 20 tanks were included in five of the tank closure alternatives evaluated in the TC & WM EIS.[2] Information about these tanks and further details of the evaluation can be found in the Summary (Page S–57) and in Appendix E of the TC & WM EIS.

Preferred Alternatives

DOE's preferred alternatives for all three major areas listed above are described in the Summary, Section S.7, and in Chapter 2, Section 2.12, of Volume 1 of the Final TC & WM EIS. Regarding wastes contained in the 20 tanks evaluated as candidates for classification as mixed TRU waste, the EIS stated that: ''Retrieval of tank waste identified as mixed TRU waste would commence only after DOE had issued a **Federal Register** notice of its preferred alternative and a ROD''.[3]

To make progress in the overall tank waste retrieval process, and in view of recent information about potential tank leaks, DOE now prefers to retrieve, treat, package, and characterize and certify the wastes that are properly and legally classified as mixed TRU waste for disposal at WIPP. Initiating retrieval of tank waste classified as mixed TRU waste would be contingent on DOE's obtaining the applicable and necessary permits, ensuring that the WIPP Waste Acceptance Criteria and all other applicable regulatory requirements have been met, and making a documented determination that the waste is properly classified as mixed TRU waste. Further, retrieval of waste would not commence until a ROD had been issued. DOE may issue such a ROD regarding the candidate TRU wastes no sooner than 30 days from the date of publication of this notice in the **Federal Register**.

[2] Tank Closure Alternatives 3A, 3B, 3C, 4, and 5.

[3] ''ROD'' refers to a Record of Decision.

Issued in Washington, DC, on March 4, 2013.

David Huizenga,

Senior Advisor for Environmental Management.

[FR Doc. 2013–05509 Filed 3–8–13; 8:45 am]

BILLING CODE 6450–01–P

DEPARTMENT OF ENERGY

Federal Energy Regulatory Commission

Combined Notice of Filings

Take notice that the Commission has received the following Natural Gas Pipeline Rate and Refund Report filings:

Filings Instituting Proceedings

Docket Numbers: RP13–620–000.
Applicants: Southern Star Central Gas Pipeline, Inc.
Description: Fuel Filing—Eff. April 1, 2013 to be effective 4/1/2013.
Filed Date: 3/1/13.
Accession Number: 20130301–5056.
Comments Due: 5 p.m. ET 3/13/13.

Docket Numbers: RP13–621–000.
Applicants: WBI Energy Transmission, Inc.
Description: 2013 Annual Fuel and Electric Power Reimbursement to be effective 4/1/2013.
Filed Date: 3/1/13.
Accession Number: 20130301–5057.
Comments Due: 5 p.m. ET 3/13/13.

Docket Numbers: RP13–622–000.
Applicants: Discovery Gas Transmission LLC.
Description: 2013 Tariff Revisions to be effective 4/1/2013.
Filed Date: 3/1/13.
Accession Number: 20130301–5058.
Comments Due: 5 p.m. ET 3/13/13.

Docket Numbers: RP13–623–000.
Applicants: Texas Eastern Transmission, LP.
Description: Northeast Energy Contract Conversion FTS–5 to FT–1 to be effective 4/1/2013.
Filed Date: 3/1/13.
Accession Number: 20130301–5064.
Comments Due: 5 p.m. ET 3/13/13.

Docket Numbers: RP13–624–000.
Applicants: Elba Express Company, L.L.C.
Description: BG Negotiated Rate Filing to be effective 4/1/2013.
Filed Date: 3/1/13.
Accession Number: 20130301–5067.
Comments Due: 5 p.m. ET 3/13/13.

Docket Numbers: RP13–625–000.
Applicants: Crossroads Pipeline Company.
Description: Operational Transactions year ended Dec 2012.
Filed Date: 3/1/13.
Accession Number: 20130301–5069.
Comments Due: 5 p.m. ET 3/13/13.

Docket Numbers: RP13–626–000.
Applicants: Energy West Development, Inc.
Description: Energy West Development, Inc. submit Lost and Unaccounted Gas [LAUF] reimbursement.
Filed Date: 2/28/13.
Accession Number: 20130228–5419.
Comments Due: 5 p.m. ET 3/12/13.

Docket Numbers: RP13–627–000.
Applicants: Virginia Power Energy Marketing Inc., Dominion Energy Brayton Point, LLC.
Description: Joint Petition of Virginia Power Energy Marketing, Inc. and Dominion Energy Brayton Point, LLC for Temporary Waiver of Capacity Release Regulations and Policies, and Request for Expedited Treatment.
Filed Date: 2/28/13.
Accession Number: 20130228–5420.
Comments Due: 5 p.m. ET 3/8/13.

Docket Numbers: RP13–628–000.
Applicants: TWP Pipeline LLC.
Description: Annual FRP Filing to be effective 4/1/2013.
Filed Date: 3/1/13.
Accession Number: 20130301–5073.
Comments Due: 5 p.m. ET 3/13/13.

Docket Numbers: RP13–629–000.
Applicants: Empire Pipeline, Inc.
Description: Annual Report Pursuant to GT&C Sec 23.5.
Filed Date: 3/1/13.
Accession Number: 20130301–5078.
Comments Due: 5 p.m. ET 3/13/13.

Docket Numbers: RP13–630–000.
Applicants: Stingray Pipeline Company, L.L.C.
Description: Stingray Pipeline Company, L.L.C. submits Events Surcharge Adjustment.
Filed Date: 2/28/13.
Accession Number: 20130228–5421.
Comments Due: 5 p.m. ET 3/12/13.

Docket Numbers: RP13–631–000.
Applicants: Gulf South Pipeline Company, LP.
Description: Remove Tariff Sections Affected by Abandonment in CP13–31–000 to be effective 3/31/2013.
Filed Date: 3/1/13.
Accession Number: 20130301–5092.
Comments Due: 5 p.m. ET 3/13/13.

Docket Numbers: RP13–632–000.
Applicants: Transcontinental Gas Pipe Line Company.
Description: Annual Fuel Tracker Filing 2013 to be effective 4/1/2013.
Filed Date: 3/1/13.
Accession Number: 20130301–5093.
Comments Due: 5 p.m. ET 3/13/13.

Docket Numbers: RP13–633–000.
Applicants: Columbia Gas Transmission, LLC.

Description: Operational Transactions year ended Dec 2012.
Filed Date: 3/1/13.
Accession Number: 20130301–5095.
Comments Due: 5 p.m. ET 3/13/13.

Docket Numbers: RP13–634–000.
Applicants: KPC Pipeline, LLC.
Description: KPC Fuel Reimbursement Adjustment to be effective 4/1/2013.
Filed Date: 3/1/13.
Accession Number: 20130301–5098.
Comments Due: 5 p.m. ET 3/13/13.

Docket Numbers: RP13–635–000.
Applicants: Hardy Storage Company, LLC.
Description: Hardy Storage Company, LLC Annual Report on Operational Transactions.
Filed Date: 3/1/13.
Accession Number: 20130301–5053.
Comments Due: 5 p.m. ET 3/13/13.

Docket Numbers: RP13–636–000.
Applicants: Columbia Gulf Transmission Company.
Description: Operational Transactions for year ended Dec 2012.
Filed Date: 3/1/13.
Accession Number: 20130301–5104.
Comments Due: 5 p.m. ET 3/13/13.

Docket Numbers: RP13–637–000.
Applicants: CenterPoint Energy Gas Transmission Comp.
Description: CEGT LLC—2013 Negotiated Rate Filing—March to be effective 3/1/2013.
Filed Date: 3/1/13.
Accession Number: 20130301–5112.
Comments Due: 5 p.m. ET 3/13/13.

Docket Numbers: RP13–638–000.
Applicants: Panhandle Eastern Pipe Line Company, LP.
Description: Fuel Filing on 3–1–13 to be effective 4/1/2013.
Filed Date: 3/1/13.
Accession Number: 20130301–5117.
Comments Due: 5 p.m. ET 3/13/13.

Docket Numbers: RP13–639–000.
Applicants: Trunkline Gas Company, LLC.
Description: Fuel Filing on 3–1–13 to be effective 4/1/2013.
Filed Date: 3/1/13.
Accession Number: 20130301–5118.
Comments Due: 5 p.m. ET 3/13/13.

Docket Numbers: RP13–640–000.
Applicants: Crossroads Pipeline Company.
Description: TRA 2013 to be effective 4/1/2013.
Filed Date: 3/1/13.
Accession Number: 20130301–5119.
Comments Due: 5 p.m. ET 3/13/13.

Docket Numbers: RP13–641–000.
Applicants: Southwest Gas Storage Company.
Description: Fuel Filing on 3–1–13 to be effective 4/1/2013.
Filed Date: 3/1/13.
Accession Number: 20130301–5120.
Comments Due: 5 p.m. ET 3/13/13.

Docket Numbers: RP13–642–000.
Applicants: Sea Robin Pipeline Company, LLC.
Description: Hurricane Surcharge Filing on 3–1–13 to be effective 4/1/2013.
Filed Date: 3/1/13.
Accession Number: 20130301–5123.
Comments Due: 5 p.m. ET 3/13/13.

Docket Numbers: RP13–643–000.
Applicants: Florida Gas Transmission Company, LLC.
Description: Fuel Filing on 3–1–13 to be effective 4/1/2013.
Filed Date: 3/1/13.
Accession Number: 20130301–5124.
Comments Due: 5 p.m. ET 3/13/13.

Docket Numbers: RP13–644–000.
Applicants: Texas Gas Transmission, LLC.
Description: CIAC Update to be effective 4/1/2013.
Filed Date: 3/1/13.
Accession Number: 20130301–5128.
Comments Due: 5 p.m. ET 3/13/13.

Docket Numbers: RP13–645–000.
Applicants: WBI Energy Transmission, Inc.
Description: 2013 NSP Restatement to be effective 3/1/2013.
Filed Date: 3/1/13.
Accession Number: 20130301–5129.
Comments Due: 5 p.m. ET 3/13/13.

Docket Numbers: RP13–646–000.
Applicants: Columbia Gas Transmission, LLC.
Description: RAM 2013 to be effective 4/1/2013.
Filed Date: 3/1/13.
Accession Number: 20130301–5135.
Comments Due: 5 p.m. ET 3/13/13.

Docket Numbers: RP13–647–000.
Applicants: Ruby Pipeline, L.L.C.
Description: FL&U and EPC Rate Adjustment effective 4–1–13 to be effective 4/1/2013.
Filed Date: 3/1/13.
Accession Number: 20130301–5144.
Comments Due: 5 p.m. ET 3/13/13.

Docket Numbers: RP13–648–000.
Applicants: MarkWest Pioneer, L.L.C.
Description: Quarterly Fuel Adjustment Filing of MarkWest Pioneer, L.L.C.
Filed Date: 3/1/13.
Accession Number: 20130301–5147.
Comments Due: 5 p.m. ET 3/13/13.

Docket Numbers: RP13–649–000.
Applicants: Colorado Interstate Gas Company, L.L.C.
Description: CIG Fuel Filing 3–1–13 to be effective 4/1/2013.
Filed Date: 3/1/13.
Accession Number: 20130301–5146.
Comments Due: 5 p.m. ET 3/13/13.

Docket Numbers: RP13–650–000.
Applicants: TransColorado Gas Transmission Company L.
Description: TransColorado Gas Transmission Company LLC 2012 Annual Fuel Gas Reimbursement Percentage Report.
Filed Date: 3/1/13.
Accession Number: 20130301–5148.
Comments Due: 5 p.m. ET 3/13/13.

Docket Numbers: RP13–651–000.
Applicants: Columbia Gas Transmission, LLC.
Description: EPCA 2013 to be effective 4/1/2013.
Filed Date: 3/1/13.
Accession Number: 20130301–5152.
Comments Due: 5 p.m. ET 3/13/13.

Docket Numbers: RP13–652–000.
Applicants: Iroquois Gas Transmission System, L.P.
Description: 03/01/13 Negotiated Rates—Citigroup Energy Inc. (RTS)—6075–04 & 05 Amend 4 to be effective 3/1/2013.
Filed Date: 3/1/13.
Accession Number: 20130301–5168.
Comments Due: 5 p.m. ET 3/13/13.

Docket Numbers: RP13–653–000.
Applicants: Iroquois Gas Transmission System, L.P.
Description: 03/01/13 Negotiated Rates—Freepoint Commodities (RTS) 7250–06 & 07 Amend 1 to be effective 3/1/2013.
Filed Date: 3/1/13.
Accession Number: 20130301–5187.
Comments Due: 5 p.m. ET 3/13/13.

Docket Numbers: RP13–654–000.
Applicants: KO Transmission Company.
Description: Transportation Retainage Adjustment Filing 2013 to be effective 4/1/2013.
Filed Date: 3/1/13.
Accession Number: 20130301–5189.
Comments Due: 5 p.m. ET 3/13/13.

Docket Numbers: RP13–655–000.
Applicants: Northern Natural Gas Company.
Description: 20130301 Non-Conforming Negotiated Rate to be effective 4/1/2013.
Filed Date: 3/1/13.
Accession Number: 20130301–5212.
Comments Due: 5 p.m. ET 3/13/13.

Docket Numbers: RP13–656–000.
Applicants: Columbia Gas Transmission, LLC.
Description: TRCA 2013 to be effective 4/1/2013.
Filed Date: 3/1/13.
Accession Number: 20130301–5217.
Comments Due: 5 p.m. ET 3/13/13.

Docket Numbers: RP13–657–000.
Applicants: Wyoming Interstate Company, L.L.C.

Description: WIC No Fuel Wheeling Area to be effective 4/1/2013.
Filed Date: 3/1/13.
Accession Number: 20130301–5238.
Comments Due: 5 p.m. ET 3/13/13.

Docket Numbers: RP13–658–000.
Applicants: Gulf Crossing Pipeline Company LLC.
Description: Amendments to Neg Rate Agmts—Vanguard 597–5, 598–5 to be effective 9/1/2012.
Filed Date: 3/1/13.
Accession Number: 20130301–5243.
Comments Due: 5 p.m. ET 3/13/13.

Docket Numbers: RP13–659–000.
Applicants: Cimarron River Pipeline, LLC.
Description: Fuel Tracker 2013 to be effective 4/1/2013.
Filed Date: 3/1/13.
Accession Number: 20130301–5247.
Comments Due: 5 p.m. ET 3/13/13.

Docket Numbers: RP13–660–000.
Applicants: Central Kentucky Transmission Company.
Description: RAM 2013 to be effective 4/1/2013.
Filed Date: 3/1/13.
Accession Number: 20130301–5250.
Comments Due: 5 p.m. ET 3/13/13.

Docket Numbers: RP13–661–000.
Applicants: Dauphin Island Gathering Partners.
Description: Storm Surcharge 2013 to be effective 4/1/2013.
Filed Date: 3/1/13.
Accession Number: 20130301–5251.
Comments Due: 5 p.m. ET 3/13/13.

Docket Numbers: RP13–662–000.
Applicants: El Paso Natural Gas Company, L.L.C.
Description: Willcox Lateral Non-Conforming TSAs to be effective 4/1/2013.
Filed Date: 3/1/13.
Accession Number: 20130301–5254.
Comments Due: 5 p.m. ET 3/13/13.

Docket Numbers: RP13–663–000
Applicants: LA Storage, LLC.
Description: LA Storage, LLC Annual Adjustment of Fuel Retainage Percentage.
Filed Date: 2/28/13.
Accession Number: 20130228–5422.
Comments Due: 5 p.m. ET 3/12/13.

Docket Numbers: RP13–664–000.
Applicants: Mississippi Canyon Gas Pipeline, L.L.C.
Description: Clean up Filing to be effective 4/1/2013.
Filed Date: 3/1/13.
Accession Number: 20130301–5345.
Comments Due: 5 p.m. ET 3/13/13.

Docket Numbers: RP13–665–000.
Applicants: Columbia Gulf Transmission Company.
Description: TRA 2013 & Offshore Cleanup to be effective 4/1/2013.
Filed Date: 3/1/13.
Accession Number: 20130301–5346.
Comments Due: 5 p.m. ET 3/13/13.

Docket Numbers: RP13–666–000.
Applicants: Kern River Gas Transmission Company.
Description: 2013 Clean-up Filing to be effective 12/1/2012.
Filed Date: 3/1/13.
Accession Number: 20130301–5348.
Comments Due: 5 p.m. ET 3/13/13.

Docket Numbers: RP13–667–000.
Applicants: High Point Gas Transmission, LLC.
Description: Annual Unaccounted for Gas Retention Percentage Filing of High Point Gas Transmission, LLC.
Filed Date: 3/1/13.
Accession Number: 20130301–5381.
Comments Due: 5 p.m. ET 3/13/13.

Docket Numbers: RP13–668–000.
Applicants: CF Industries Enterprises, Inc., CF Industries Nitrogen, LLC.
Description: Joint Petition for Expedited Limited Waiver of Capacity Release Regulations and Policies of CF Industries Enterprises, Inc. and CF Industries Nitrogen, LLC.
Filed Date: 3/1/13.
Accession Number: 20130301–5383.
Comments Due: 5 p.m. ET 3/13/13.

Any person desiring to intervene or protest in any of the above proceedings must file in accordance with Rules 211 and 214 of the Commission's Regulations (18 CFR 385.211 and 385.214) on or before 5:00 p.m. Eastern time on the specified comment date. Protests may be considered, but intervention is necessary to become a party to the proceeding.

Filings in Existing Proceedings

Docket Numbers: RP13–404–001.
Applicants: Transwestern Pipeline Company, LLC.
Description: 2013 TW Settlement Filing to Implement Tariff Sheets to be effective 4/1/2013.
Filed Date: 3/1/13.
Accession Number: 20130301–5125.
Comments Due: 5 p.m. ET 3/13/13.

Any person desiring to protest in any the above proceedings must file in accordance with Rule 211 of the Commission's Regulations (18 CFR 385.211) on or before 5:00 p.m. Eastern time on the specified comment date.

The filings are accessible in the Commission's eLibrary system by clicking on the links or querying the docket number.

eFiling is encouraged. More detailed information relating to filing requirements, interventions, protests, and service can be found at: *http://www.ferc.gov/docs-filing/efiling/filing-req.pdf.* For other information, call (866) 208–3676 (toll free). For TTY, call (202) 502–8659.

Dated: March 04, 2013.

Nathaniel J. Davis, Sr.,

Deputy Secretary.

[FR Doc. 2013–05528 Filed 3–8–13; 8:45 am]

BILLING CODE 6717–01–P

DEPARTMENT OF ENERGY

Federal Energy Regulatory Commission

Combined Notice of Filings #1

Take notice that the Commission received the following electric rate filings:

Docket Numbers: ER10–1782–004.
Applicants: Tampa Electric Company.
Description: Tampa Electric Company submits its Annual Compliance Report Regarding Operational Penalties for 2012.
Filed Date: 3/1/13.
Accession Number: 20130301–5102.
Comments Due: 5 p.m. ET 3/22/13.

Docket Numbers: ER12–2277–004.
Applicants: Midwest Independent Transmission System Operator, Inc.
Description: G631–2–3 2nd Deficiency Response to be effective 7/21/2012.
Filed Date: 2/28/13.
Accession Number: 20130228–5374.
Comments Due: 5 p.m. ET 3/21/13.

Docket Numbers: ER12–540–004; ER12–539–004; ER10–1414–003; ER11–1881–005; ER10–3166–003; ER12–2159–002; ER11–1890–005; ER11–1882–005; ER10–1821–004; ER10–1346–004; ER10–1406–004; ER10–1348–004; ER12–2205–003; ER11–1883–005 ER11–2534–004; ER11–1885–005; ER10–1416–004; ER11–1892–005; ER11–1886–005; ER11–4475–004; ER11–1893–005 ER11–1887–005; ER11–1889–005; ER11–1894–005.
Applicants: APDC, Inc., Atlantic Power Energy Services (US) LLC, Auburndale Power Partners, L.P., Burley Butte Wind Park, LLC, Cadillac Renewable Energy, LLC, Canadian Hills Wind, LLC, Camp Reed Wind Park, LLC, Golden Valley Wind Park, LLC, Goshen Phase II LLC, Frederickson Power LP, Lake Cogen, Ltd., Manchief Power Company LLC, Oregon Trail Wind Park, LLC, Meadow Creek Project Company LLC, Milner Dam Wind Park, LLC, Morris Cogeneration, LLC, Pasco Cogen, Ltd., Payne's Ferry Wind Park, LLC, Pilgrim Stage Station Wind Park, LLC, Rockland Wind Farm LLC, Salmon Falls Wind Park, LLC, Thousand Springs Wind Park, LLC, Tuana Gulch Wind Park, LLC, Yahoo Creek Wind Park, LLC.

Description: Supplement to January 28, 2013 Notice of Non-Material Change in Status of APDC, Inc., et al.
Filed Date: 2/28/13.
Accession Number: 20130228–5298.
Comments Due: 5 p.m. ET 3/14/13.

Docket Numbers: ER13–1007–000.
Applicants: Midwest Independent Transmission System Operator, Inc.
Description: 2013–02–28 SA 2507 Interstate-ITC E&P Agreement to be effective 3/1/2013.
Filed Date: 2/28/13.
Accession Number: 20130228–5376.
Comments Due: 5 p.m. ET 3/21/13.

Docket Numbers: ER13–1008–000.
Applicants: Midwest Independent Transmission System Operator, Inc.
Description: 02–28–2013 SA 2515 Ameren-Archer Daniels to be effective 3/1/2013.
Filed Date: 2/28/13.
Accession Number: 20130228–5377.
Comments Due: 5 p.m. ET 3/21/13.

Docket Numbers: ER13–1009–000.
Applicants: PacifiCorp.
Description: BPA Revised Service Agreements to be effective 5/1/2013.
Filed Date: 3/1/13.
Accession Number: 20130301–5001.
Comments Due: 5 p.m. ET 3/22/13.

Docket Numbers: ER13–1010–000.
Applicants: New England Power Pool Participants Committee, ISO New England Inc.
Description: New England Power Pool Participants Committee submits tariff filing per 35.13(a)(2)(iii: MR1 Revisions Regarding DR Asset Auditing to be effective 5/1/2013.
Filed Date: 3/1/13.
Accession Number: 20130301–5130.
Comments Due: 5 p.m. ET 3/22/13.

Docket Numbers: ER13–1011–000.
Applicants: Southwest Power Pool, Inc.
Description: Southwest Power Pool, Inc. submits tariff filing per 35.13(a)(2)(iii: 1636R9 Kansas Electric Power Cooperative, Inc. NITSA NOA to be effective 2/1/2013.
Filed Date: 3/1/13.
Accession Number: 20130301–5131.
Comments Due: 5 p.m. ET 3/22/13.

Docket Numbers: ER13–1012–000.
Applicants: Southwest Power Pool, Inc.
Description: Southwest Power Pool, Inc. submits tariff filing per 35.13(a)(2)(iii: 2198R5 Kansas Power Pool NITSA NOA to be effective 2/1/2013.
Filed Date: 3/1/13.
Accession Number: 20130301–5132.
Comments Due: 5 p.m. ET 3/22/13.

Docket Numbers: ER13–1013–000.
Applicants: Southwest Power Pool, Inc.
Description: Southwest Power Pool, Inc. submits tariff filing per 35.13(a)(2)(iii: 2379R1 Flat Ridge 2 Wind Energy Meter Agent Agreement to be effective 2/1/2013.
Filed Date: 3/1/13.
Accession Number: 20130301–5133.
Comments Due: 5 p.m. ET 3/22/13.

Docket Numbers: ER13–1014–000.
Applicants: Southwest Power Pool, Inc.
Description: Southwest Power Pool, Inc. submits tariff filing per 35.13(a)(2)(iii: 2519 Arkansas Electric Cooperative Corporation Meter Agent Agreement to be effective 2/1/2013.
Filed Date: 3/1/13.
Accession Number: 20130301–5134.
Comments Due: 5 p.m. ET 3/22/13.

Docket Numbers: ER13–1015–000.
Applicants: Eagle Creek Hydro Power, LLC.
Description: Eagle Creek Hydro Power, LLC submits tariff filing per 35.15: Notice of Cancellation of FERC Electric Tariff, Original Volume No. 1 to be effective 3/4/2013.
Filed Date: 3/1/13.
Accession Number: 20130301–517.
Comments Due: 5 p.m. ET 3/22/13.

Docket Numbers: ER13–1016–000.
Applicants: New England Power Pool Participants Committee.
Description: New England Power Pool Participants Committee submits tariff filing per 35.13(a)(2)(iii: Mar 2013 Membership Filing to be effective 3/1/2013.
Filed Date: 3/1/13.
Accession Number: 20130301–5196.
Comments Due: 5 p.m. ET 3/22/13.

Docket Numbers: ER13–1017–000.
Applicants: Consumers Energy Company, CMS Energy Resource Management Company.
Description: Application of the Consumers Energy Company and CMS Energy Resource Management Company for Waiver of Affiliate Restrictions Related to Consumers Energy Company's 2016 Planning Year Auction for Capacity.
Filed Date: 3/1/13.
Accession Number: 20130301–5197.
Comments Due: 5 p.m. ET 3/22/13.

Take notice that the Commission received the following electric reliability filings:

Docket Numbers: RR13–2–000.
Applicants: North American Electric Reliability Corporation,
Description: Petition of North American Electric Reliability Corporation for Approval of Revisions to the NERC Standard Processes Manual.
Filed Date: 2/28/13.
Accession Number: 20130228–5212.
Comments Due: 5 p.m. ET 3/21/13.

The filings are accessible in the Commission's eLibrary system by clicking on the links or querying the docket number.

Any person desiring to intervene or protest in any of the above proceedings must file in accordance with Rules 211 and 214 of the Commission's Regulations (18 CFR 385.211 and 385.214) on or before 5:00 p.m. Eastern time on the specified comment date. Protests may be considered, but intervention is necessary to become a party to the proceeding.

eFiling is encouraged. More detailed information relating to filing requirements, interventions, protests, service, and qualifying facilities filings can be found at: *http://www.ferc.gov/docs-filing/efiling/filing-req.pdf.* For other information, call (866) 208–3676 (toll free). For TTY, call (202) 502–8659.

Dated: March 01, 2013.

Nathaniel J. Davis, Sr.,

Deputy Secretary.

[FR Doc. 2013–05531 Filed 3–8–13; 8:45 am]

BILLING CODE 6717–01–P

DEPARTMENT OF ENERGY

Federal Energy Regulatory Commission

Combined Notice of Filings #1

Take notice that the Commission received the following electric corporate filings:

Docket Numbers: EC13–76–000.
Applicants: Tucson Electric Power Company.
Description: Application of Tucson Electric Power Company under FPA Section 203.
Filed Date: 2/26/13.
Accession Number: 20130226–5059.
Comments Due: 5 p.m. ET 3/19/13.

Take notice that the Commission received the following electric rate filings:

Docket Numbers: ER10–1942–007; ER10–2042–010; ER10–1941–003; ER11–3840–001; ER10–1938–005; ER10–1937–003; ER10–1898–004; ER10–1934–004; ER10–1893–004; ER10–1888–003; ER10–1885–003; ER10–1884–003; ER10–1883–003; ER10–1878–003; ER10–1876–003; ER10–1875–003; ER10–1873–003; ER12–1987–001; ER10–1947–003; ER10–1864–003; ER10–1867–003; ER10–1862–004; ER12–2261–001; ER10–1865–003.
Applicants: Calpine Construction Finance Company, LP, Calpine Energy

Services L.P., Calpine Gilroy Cogen, L.P., Calpine Greenleaf, Inc., Calpine Power America—CA, LLC, Calpine Power America—OR, LLC,CES Marketing V, L.P.,CES Marketing IX, LLC,CES Marketing X, LLC, Creed Energy Center, LLC, Delta Energy Center, LLC, Geysers Power Company, LLC, Gilroy Energy Center, LLC, Goose Haven Energy Center, LLC, Los Esteros Critical Energy Facility, LLC, Los Medanos Energy Center LLC, Metcalf Energy Center, LLC,O.L.S. Energy—Agnews, Inc., Otay Mesa Energy Center, LLC, Pastoria Energy Center, LLC, PCF2, LLC, Power Contract Finance, L.L.C., Russell City Energy Company, LLC, South Point Energy Center, LLC.

Description: Notification of Change in Status of Calpine Construction Finance Company, L.P., et al.

Filed Date: 2/25/13.

Accession Number: 20130225–5177.

Comments Due: 5 p.m. ET 3/18/13.

Docket Numbers: ER11–4050–001; *ER11–4027–002; ER11–4028–002*.

Applicants: Cogentrix of Alamosa, LLC, Portsmouth Genco, LLC, James River Genco, LLC.

Description: Supplement to January 14, 2013 Notice of Non-Material Change in Status of Cogentrix of Alamosa, LLC, et al.

Filed Date: 2/7/13.

Accession Number: 20130207–5093.

Comments Due: 5 p.m. ET 3/12/13.

Docket Numbers: ER13–523–001.

Applicants: Trans Bay Cable LLC.

Description: Revised Annual TRBAA Update to be effective 1/1/2013.

Filed Date: 2/25/13.

Accession Number: 20130225–5140.

Comments Due: 5 p.m. ET 3/18/13.

Docket Numbers: ER13–977–000.

Applicants: Pacific Gas and Electric Company.

Description: Notice of Termination of SPS Corcoran E&P Agreement to be effective 1/3/2012.

Filed Date: 2/25/13.

Accession Number: 20130225–5000.

Comments Due: 5 p.m. ET 3/18/13.

Docket Numbers: ER13–980–000.

Applicants: Midwest Independent Transmission System Operator, Inc.

Description: 2013–02–25 RSG TLR Filing to be effective 4/27/2013.

Filed Date: 2/25/13.

Accession Number: 20130225–5051.

Comments Due: 5 p.m. ET 3/18/13.

Docket Numbers: ER13–981–000.

Applicants: Ontario Power Generation Inc.

Description: Ontario Power Generation Inc. submits Refund Report for recent energy sales in the New York Independent System Operator, Inc.

Filed Date: 2/25/13.

Accession Number: 20130225–5088.

Comments Due: 5 p.m. ET 3/18/13.

Docket Numbers: ER13–982–000.

Applicants: Southwestern Electric Power Company.

Description: SWEPCO-Golden Spread EC and Greenbelt EC DPA to be effective 1/25/2013.

Filed Date: 2/25/13.

Accession Number: 20130225–5119.

Comments Due: 5 p.m. ET 3/18/13.

Docket Numbers: ER13–983–000.

Applicants: Arizona Public Service Company.

Description: Arizona Public Service files MPP Westwing Substation Construction Agreement to be effective 4/26/2013.

Filed Date: 2/25/13.

Accession Number: 20130225–5178.

Comments Due: 5 p.m. ET 3/18/13.

Docket Numbers: ER13–984–000.

Applicants: Midwest Independent Transmission System Operator, Inc.

Description: 2013–02–25 RSG Sign Convention Filing to be effective 4/27/2013.

Filed Date: 2/25/13.

Accession Number: 20130225–5179.

Comments Due: 5 p.m. ET 3/18/13.

The filings are accessible in the Commission's eLibrary system by clicking on the links or querying the docket number.

Any person desiring to intervene or protest in any of the above proceedings must file in accordance with Rules 211 and 214 of the Commission's Regulations (18 CFR 385.211 and 385.214) on or before 5:00 p.m. Eastern time on the specified comment date. Protests may be considered, but intervention is necessary to become a party to the proceeding.

eFiling is encouraged. More detailed information relating to filing requirements, interventions, protests, service, and qualifying facilities filings can be found at: *http://www.ferc.gov/docs-filing/efiling/filing-req.pdf.* For other information, call (866) 208–3676 (toll free). For TTY, call (202) 502–8659.

Dated: February 26, 2013.

Nathaniel J. Davis, Sr.,

Deputy Secretary.

[FR Doc. 2013–05529 Filed 3–8–13; 8:45 am]

BILLING CODE 6717–01–P

DEPARTMENT OF ENERGY

Federal Energy Regulatory Commission

Combined Notice of Filings #2

Take notice that the Commission received the following electric rate filings:

Docket Numbers: ER12–1173–000; ER12–1173–001; ER12–1173–002.

Applicants: PJM Interconnection, L.L.C., American Electric Power Service Corporation.

Description: American Electric Power Service Corporation on behalf of Indiana Michigan Power Company submits Motion to Withdraw Rate Schedule and Terminate Proceeding.

Filed Date: 2/25/13.

Accession Number: 20130225–5184.

Comments Due: 5 p.m. ET 3/12/13.

Docket Numbers: ER13–985–000.

Applicants: PJM Interconnection, L.L.C.

Description: Original Service Agreement No. 3499; Queue No. Y1–063 to be effective 1/30/2013.

Filed Date: 2/26/13.

Accession Number: 20130226–5053.

Comments Due: 5 p.m. ET 3/19/13.

Docket Numbers: ER13–986–000.

Applicants: PJM Interconnection, L.L.C.

Description: Original Service Agreement No. 3500; Queue No. Y1–064 to be effective 1/30/2013.

Filed Date: 2/26/13.

Accession Number: 20130226–5054.

Comments Due: 5 p.m. ET 3/19/13.

Docket Numbers: ER13–987–000.

Applicants: Midwest Independent Transmission System Operator, Inc.

Description: Midwest Independent Transmission System Operator, Inc. submits tariff filing per 35.13(a)(2)(iii: 02–26–2013 SA 2350 ITC–WM Renewable Energy Amended GIA to be effective 2/27/2013.

Filed Date: 2/26/13.

Accession Number: 20130226–5100.

Comments Due: 5 p.m. ET 3/19/13.

Docket Numbers: ER13–988–000.

Applicants: Northern States Power Company, a Minnesota corporation.

Description: Northern States Power Company, a Minnesota corporation submits Notice of Cancellation of Rate Schedule No. 524, et. al. with City of Brownton, Minnesota.

Filed Date: 2/26/13.

Accession Number: 20130226–5113.

Comments Due: 5 p.m. ET 3/19/13.

Take notice that the Commission received the following electric reliability filings.

Docket Numbers: RD13–5–000.

Applicants: North American Electric Reliability Corporation.

Description: Supplemental Information to the North American Electric Reliability Corporation Compliance Filing in Response to Order on Violation Severity Levels and Violation Risk Factors Proposed by the ERO.

Filed Date: 2/15/13.
Accession Number: 20130215–5097.
Comments Due: 5 p.m. ET 3/8/13.

Docket Numbers: RD13–6–000.
Applicants: North American Electric Reliability Corporation.
Description: Petition of the North American Electric Reliability Corporation for Approval of Proposed Reliability Standard VAR–001–3—Voltage and Reactive Control.
Filed Date: 2/26/13.
Accession Number: 20130226–5108.
Comments Due: 5 p.m. ET 3/28/13.

The filings are accessible in the Commission's eLibrary system by clicking on the links or querying the docket number.

Any person desiring to intervene or protest in any of the above proceedings must file in accordance with Rules 211 and 214 of the Commission's Regulations (18 CFR 385.211 and 385.214) on or before 5:00 p.m. Eastern time on the specified comment date. Protests may be considered, but intervention is necessary to become a party to the proceeding.

eFiling is encouraged. More detailed information relating to filing requirements, interventions, protests, service, and qualifying facilities filings can be found at: *http://www.ferc.gov/docs-filing/efiling/filing-req.pdf.* For other information, call (866) 208–3676 (toll free). For TTY, call (202) 502–8659.

Dated: February 26, 2013.

Nathaniel J. Davis, Sr.,

Deputy Secretary.

[FR Doc. 2013–05530 Filed 3–8–13; 8:45 am].

BILLING CODE 6717–01–P

DEPARTMENT OF ENERGY

Federal Energy Regulatory Commission

[Docket No. CP13–64–000]

Gulf Crossing Pipeline Company LLC; Notice of Intent To Prepare an Environmental Assessment for the Proposed Panda Power Lateral Project and Request for Comments on Environmental Issues

The staff of the Federal Energy Regulatory Commission (FERC or Commission) will prepare an environmental assessment (EA) that will discuss the environmental impacts of the Panda Power Lateral Project involving construction and operation of facilities by Gulf Crossing Pipeline Company LLC (Gulf Crossing) in Grayson County, Texas. The Commission will use this EA in its decision-making process to determine whether the project is in the public convenience and necessity.

This notice announces the opening of the scoping process the Commission will use to gather input from the public and interested agencies on the project. Your input will help the Commission staff determine what issues they need to evaluate in the EA. Please note that the scoping period will close on April 3, 2013.

This notice is being sent to the Commission's current environmental mailing list for this project. State and local government representatives should notify their constituents of this proposed project and encourage them to comment on their areas of concern.

If you are a landowner receiving this notice, a pipeline company representative may contact you about the acquisition of an easement to construct, operate, and maintain the proposed facilities. The company would seek to negotiate a mutually acceptable agreement. However, if the Commission approves the project, that approval conveys with it the right of eminent domain. Therefore, if easement negotiations fail to produce an agreement, the pipeline company could initiate condemnation proceedings where compensation would be determined in accordance with state law.

Gulf Crossing provided landowners with a fact sheet prepared by the FERC entitled ''An Interstate Natural Gas Facility On My Land? What Do I Need To Know?''. This fact sheet addresses a number of typically-asked questions, including the use of eminent domain and how to participate in the Commission's proceedings. It is also available for viewing on the FERC Web site (*www.ferc.gov*).

Summary of the Proposed Project

Gulf Crossing proposes to construct and operate a new pipeline lateral along with metering, interconnect, and pigging facilities north of Dallas, Texas in Grayson County, Texas. The Panda Power Lateral would provide 125,000 dekatherms per day of deliverable natural gas capacity from its takeoff at the Sherman Compressor Station located 10 miles northeast of Sherman, Texas, to Panda Sherman Power, LLC's Panda Sherman Power Plant I electric generation power plant, currently under construction on the south side of Sherman, Texas. According to Gulf Crossing, its project would help meet the increasing demands for electricity in the expanding market area of north central Texas.

The Panda Power Lateral Project (Project) would consist of the following facilities:

- A 16.5-mile-long 16-inch-diameter pipeline lateral;
- A pig launcher barrel and system tie-in facilities at Milepost (MP) 0.0 consisting of a 16-inch launcher barrel and associated piping and valves; [1]
- Two mainline valves and appurtenant facilities at MPs 8.74 and 14.76;
- A pig receiver barrel and meter station consisting of a 16-inch receiver barrel and associated piping and valves at MP 16.52; and
- An Enterprise Texas Pipeline (ETP) interconnect at MP 14.75 consisting of a meter and flow control station to be built, owned, and operated by ETP.

The general location of the project facilities is shown in appendix 1.[2]

Land Requirements for Construction

Construction of the proposed facilities would require disturbance of 271 acres of land. This total would include 158 acres of temporary right-of-way that would be fully restored to original use, and 113 acres of new permanent right-of-way required for the pipeline, appurtenant facilities, and access roads. Eleven of the 29 access roads to be used for construction would be new, five would be temporary, and only two of the proposed 24 permanent access roads would require improvements beyond a gravel or dirt surface. Some of the access roads All the access roads The temporary right-of-way would be comprised of 81 acres of nominal workspace along the pipeline, 38 acres of temporary additional workspaces along the pipeline, and 36 acres of contractor yards. Gulf Crossing would use a typical construction right-of-way width of 75 to 100 feet and a permanent right-of-way width of 50 feet. About 55 percent of the proposed pipelines would parallel existing pipeline, electric, and sewer utility rights-of-way.

The EA Process

The National Environmental Policy Act (NEPA) requires the Commission to take into account the environmental impacts that could result from an action

---

[1] A ''pig'' is a tool that the pipeline company inserts into and pushes through the pipeline for cleaning the pipeline, conducting internal inspections, or other purposes.

[2] The appendices referenced in this notice will not appear in the **Federal Register**. Copies of appendices were sent to all those receiving this notice in the mail and are available at *www.ferc.gov* using the link called ''eLibrary'' or from the Commission's Public Reference Room, 888 First Street NE., Washington, DC 20426, or call (202) 502–8371. For instructions on connecting to eLibrary, refer to the last page of this notice.

whenever it considers the issuance of a Certificate of Public Convenience and Necessity. NEPA also requires us [3] to discover and address concerns the public may have about proposals. This process is referred to as ''scoping.'' The main goal of the scoping process is to focus the analysis in the EA on the important environmental issues. By this notice, the Commission requests public comments on the scope of the issues to address in the EA. We will consider all filed comments during the preparation of the EA.

In the EA we will discuss impacts that could occur as a result of the construction and operation of the proposed project under these general headings:

- Geology and soils;
- Land use;
- Water resources, fisheries, and wetlands;
- Cultural resources;
- Vegetation and wildlife;
- Air quality and noise;
- Endangered and threatened species; and
- Public safety.

We will also evaluate reasonable alternatives to the proposed project or portions of the project, and make recommendations on how to lessen or avoid impacts on the various resource areas.

The EA will present our independent analysis of the issues. The EA will be available in the public record through eLibrary. Depending on the comments received during the scoping process, we may also publish and distribute the EA to the public for an allotted comment period. We will consider all comments on the EA before making our recommendations to the Commission. To ensure we have the opportunity to consider and address your comments, please carefully follow the instructions in the Public Participation section beginning on page 5.

With this notice, we are asking agencies with jurisdiction by law and/or special expertise with respect to the environmental issues of this project to formally cooperate with us in the preparation of the EA.[4] Agencies that would like to request cooperating agency status should follow the instructions for filing comments provided under the Public Participation section of this notice.

[3] ''We,'' ''us,'' and ''our'' refer to the environmental staff of the Commission's Office of Energy Projects.

[4] The Council on Environmental Quality regulations addressing cooperating agency responsibilities are at Title 40, Code of Federal Regulations, Part 1501.6.

Consultations Under Section 106 of the National Historic Preservation Act

In accordance with the Advisory Council on Historic Preservation's implementing regulations for section 106 of the National Historic Preservation Act, we are using this notice to initiate consultation with applicable State Historic Preservation Office (SHPO), and to solicit their views and those of other government agencies, interested Indian tribes, and the public on the project's potential effects on historic properties.[5] We will define the project-specific Area of Potential Effects (APE) in consultation with the SHPOs as the project develops. On natural gas facility projects, the APE at a minimum encompasses all areas subject to ground disturbance (examples include construction right-of-way, contractor/pipe storage yards, compressor stations, and access roads). Our EA for this project will document our findings on the impacts on historic properties and summarize the status of consultations under section 106.

Public Participation

You can make a difference by providing us with your specific comments or concerns about the project. Your comments should focus on the potential environmental effects, reasonable alternatives, and measures to avoid or lessen environmental impacts. The more specific your comments, the more useful they will be. To ensure that your comments are timely and properly recorded, please send your comments so that the Commission receives them in Washington, DC on or before April 3, 2013.

For your convenience, there are three methods which you can use to submit your comments to the Commission. In all instances please reference the project docket number (CP13–64–000) with your submission. The Commission encourages electronic filing of comments and has expert staff available to assist you at (202) 502–8258 or *efiling@ferc.gov.*

(1) You can file your comments electronically using the eComment feature on the Commission's Web site (*www.ferc.gov*) under the link to Documents and Filings. This is an easy method for interested persons to submit brief, text-only comments on a project;

(2) You can file your comments electronically using the eFiling feature on the Commission's Web site (*www.ferc.gov*) under the link to Documents and Filings. With eFiling, you can provide comments in a variety of formats by attaching them as a file with your submission. New eFiling users must first create an account by clicking on ''eRegister.'' You must select the type of filing you are making. If you are filing a comment on a particular project, please select ''Comment on a Filing''; or

(3) You can file a paper copy of your comments by mailing them to the following address: Kimberly D. Bose, Secretary, Federal Energy Regulatory Commission, 888 First Street NE., Room 1A, Washington, DC 20426.

[5] The Advisory Council on Historic Preservation's regulations are at Title 36, Code of Federal Regulations, Part 800. Those regulations define historic properties as any prehistoric or historic district, site, building, structure, or object included in or eligible for inclusion in the National Register of Historic Places.

Environmental Mailing List

The environmental mailing list includes federal, state, and local government representatives and agencies; elected officials; environmental and public interest groups; Native American Tribes; other interested parties; and local libraries and newspapers. This list also includes all affected landowners (as defined in the Commission's regulations) who are potential right-of-way grantors, whose property may be used temporarily for project purposes, or who own homes within certain distances of aboveground facilities, and anyone who submits comments on the project. We will update the environmental mailing list as the analysis proceeds to ensure that we send the information related to this environmental review to all individuals, organizations, and government entities interested in and/or potentially affected by the proposed project.

If we publish and distribute the EA, copies will be sent to the environmental mailing list for public review and comment. If you would prefer to receive a paper copy of the document instead of the CD version or would like to remove your name from the mailing list, please return the attached Information Request (appendix 2).

Becoming an Intervenor

In addition to involvement in the EA scoping process, you may want to become an ''intervenor'' which is an official party to the Commission's proceeding. Intervenors play a more formal role in the process and are able to file briefs, appear at hearings, and be heard by the courts if they choose to appeal the Commission's final ruling. An intervenor formally participates in the proceeding by filing a request to intervene. Instructions for becoming an intervenor are in the User's Guide under the ''e-filing'' link on the Commission's Web site.

Additional Information

Additional information about the project is available from the Commission's Office of External Affairs, at (866) 208–FERC, or on the FERC Web site at *www.ferc.gov* using the ''eLibrary'' link. Click on the eLibrary link, click on ''General Search'' and enter the docket number, excluding the last three digits in the Docket Number field (i.e., CP13–64). Be sure you have selected an appropriate date range. For assistance, please contact FERC Online Support at *FercOnlineSupport@ferc.gov* or toll free at (866) 208–3676, or for TTY, contact (202) 502–8659. The eLibrary link also provides access to the texts of formal documents issued by the Commission, such as orders, notices, and rulemakings.

In addition, the Commission now offers a free service called eSubscription which allows you to keep track of all formal issuances and submittals in specific dockets. This can reduce the amount of time you spend researching proceedings by automatically providing you with notification of these filings, document summaries, and direct links to the documents. Go to *www.ferc.gov/esubscribenow.htm.*

Finally, public meetings or site visits will be posted on the Commission's calendar located at *www.ferc.gov/EventCalendar/EventsList.aspx* along with other related information.

Dated: March 4, 2013.

Kimberly D. Bose,

Secretary.

[FR Doc. 2013–05550 Filed 3–8–13; 8:45 am]

BILLING CODE 6717–01–P

DEPARTMENT OF ENERGY

Federal Energy Regulatory Commission

[Project No. 14497–000]

Archon Energy 1, Inc.; Notice of Preliminary Permit Application Accepted for Filing and Soliciting Comments, Motions To Intervene, and Competing Applications

On February 11, 2013, the Archon Energy 1, Inc., filed an application for a preliminary permit, pursuant to section 4(f) of the Federal Power Act (FPA), proposing to study the feasibility of the Kings River Drop 3 Hydroelectric Project (Kings river Drop 3 Project or project) to be located on Kings River, near the city of Sanger, Fresno County, California. The sole purpose of a preliminary permit, if issued, is to grant the permit holder priority to file a license application during the permit term. A preliminary permit does not authorize the permit holder to perform any land-disturbing activities or otherwise enter upon lands or waters owned by others without the owners' express permission.

The proposed project would consist of the following: (1) A VLH diversion canal intake and a gated turbine structure adjacent to the eastern abutment of the existing dam; (2) a 300-foot by 60-foot turbine structure enclosing three VLH 4000 turbo generators; (3) a 10 foot by 10 foot electrical control shack; and (4) appurtenant facilities. The proposed project would have a total installed capacity of 1.5 megawatts (MW) and generate an estimated average annual energy production of 10,000 megawatt-hours (MWh) by diverting existing stream flow into the diversion canal.

Applicant Contact: Mr. Paul Grist, Archon Energy 1, Inc., 101 E. Kennedy Blvd., Suite 2800, Tampa, Florida 33602, phone: (403) 618–2018.

FERC Contact: Kenneth Hogan; phone: (202) 502–8434, email: *kenneth.hogan@ferc.gov.*

Deadline for filing comments, motions to intervene, competing applications (without notices of intent), or notices of intent to file competing applications: 60 days from the issuance of this notice. Competing applications and notices of intent must meet the requirements of 18 CFR 4.36. Comments, motions to intervene, notices of intent, and competing applications may be filed electronically via the Internet. See 18 CFR 385.2001(a)(1)(iii) and the instructions on the Commission's Web site *http://www.ferc.gov/docs-filing/efiling.asp.* Commenters can submit brief comments up to 6,000 characters, without prior registration, using the eComment system at *http://www.ferc.gov/docs-filing/ecomment.asp.* You must include your name and contact information at the end of your comments. For assistance, please contact FERC Online Support at *FERCOnlineSupport@ferc.gov* or toll free at 1–866–208–3676, or for TTY, (202) 502–8659. Although the Commission strongly encourages electronic filing, documents may also be paper-filed. To paper-file, mail an original and seven copies to: Kimberly D. Bose, Secretary, Federal Energy Regulatory Commission, 888 First Street NE., Washington, DC 20426.

More information about this project, including a copy of the application, can be viewed or printed on the ''eLibrary'' link of Commission's Web site at *http://www.ferc.gov/docs-filing/elibrary.asp.* Enter the docket number (P–14497) in the docket number field to access the document. For assistance, contact FERC Online Support.

Dated: March 4, 2013.

Kimberly D. Bose,

Secretary.

[FR Doc. 2013–05549 Filed 3–8–13; 8:45 am]

BILLING CODE 6717–01–P

DEPARTMENT OF HEALTH AND HUMAN SERVICES

Centers for Disease Control and Prevention

[30Day–13–12RS]

Agency Forms Undergoing Paperwork Reduction Act Review

The Centers for Disease Control and Prevention (CDC) publishes a list of information collection requests under review by the Office of Management and Budget (OMB) in compliance with the Paperwork Reduction Act (44 U.S.C. Chapter 35). To request a copy of these requests, call (404) 639–7570 or send an email to *omb@cdc.gov.* Send written comments to CDC Desk Officer, Office of Management and Budget, Washington, DC 20503 or by fax to (202) 395–5806. Written comments should be received within 30 days of this notice.

Proposed Project

Exposure Assessment and Epidemiological Study of U.S. Workers Exposed to Carbon Nanotubes and Carbon Nanofibers—New—National Institute for Occupational Safety and Health (NIOSH), Centers for Disease Control and Prevention (CDC).

Background and Brief Description

The mission of the National Institute for Occupational Safety and Health (NIOSH) is to promote safety and health at work for all people through research and prevention. The Occupational Safety and Health Act of 1970, Public Law 91–596 (Section 20[a][1] authorizes NIOSH to conduct research to advance the health and safety of workers. In this capacity, NIOSH will conduct an exposure assessment and epidemiological study of U.S. carbon nanotube (CNT) and carbon nanofiber (CNF) workers.

At present, because of the newness of the technology, much of the occupational exposure to engineered nanomaterials occurs at the research and development (R&D) or pilot scale. There have been few reliable surveys of the size of the workforce exposed to nanomaterials. Health effects from exposure to nanomaterials are uncertain, but may be more severe than

from larger-sized particles of the same material. This is due to the small size, high surface area per unit mass (i.e., specific surface area) or (in some cases) high aspect ratio of nanomaterials. Carbon nanotubes and nanofibers are among the nanomaterials of greatest interest from a public health perspective because of their potentially asbestiform properties (e.g., high aspect ratio) and toxicological evidence of possible fibrogenic, inflammatory, and clastogenic damage resulting from exposures at occupationally relevant levels. In addition, the useful properties of CNT and CNF have rendered them among the first nanomaterials to be commercially exploited in manufacturing settings. Thus, an epidemiologic study to determine whether early or late health effects occur from occupational exposure to CNT and CNF is warranted.

The proposed research is a cross-sectional study of the small current U.S. workforce involved with CNT and CNF in manufacturing and distribution, to be conducted in the following phases: (1) Industrywide exposure assessment study to evaluate worker exposure and further develop and refine measurement methods for CNT and CNF. This component will refine sampling and analysis protocols previously developed for the detection and quantification of CNT and CNF in US workplaces. 2) A cross-sectional study relating the best metrics of CNT and CNF exposure to markers of early pulmonary or cardiovascular health effects. After the sampling and analysis protocols have been established to measure CNT and CNF, an industrywide study of the association between exposure and health effects will be conducted. Medical examinations will be conducted and several biomarkers of early effect (for pulmonary fibrosis, cardiovascular disease, and genetic damage) will be measured in blood and sputum for workers exposed to a range of CNT and CNF levels.

The study will include a questionnaire with a three-fold purpose: (1) To determine whether study participants have any contraindications for certain medical procedures to be conducted (spirometry and sputum induction), (2) to assist in interpretation of the biomarker results, and (3) to inquire about current and past exposure to CNT, CNF, and other chemicals, dusts, and fumes. The questionnaire will be given by NIOSH personnel as a computer-assisted personal interview (CAPI). After administration of the CAPI, medical examinations will be conducted to evaluate pulmonary function (via spirometry) and blood pressure, and sputum and blood will be collected. Statistical analyses will be conducted to determine the nature of the relation between exposure to CNT and CNF and these biomarkers of early effect, considering potential confounding factors such as smoking, age, gender, and workplace co-exposures, including non-engineered ultrafine particles.

The proposed project supports the NIOSH legislatively mandated industrywide studies program that conducts epidemiological and exposure assessment research studies to identify the occupational causes of disease in the working population and their offspring and to effectively communicate study results to workers, scientists, industry, and the public.

The questionnaire will be administered one time only, at the worksite, to 100 workers involved in the production and use of CNT or CNT, over a three-year period. The study will be carried out during the participants' regular work shift. There is no cost to respondents or their employers other than their time. We estimate that the average burden per response to be 22 minutes for the questionnaire and 20 minutes for the consent form. There are no costs to respondents other than their time. The total estimated annual burden hours are 23.

ESTIMATED ANNUALIZED BURDEN HOURS

Type of respondents	Form name	Number of respondents	Number of responses per respondent	Average burden per response (in hours)
Nanomaterials Workers	Questionnaire	33	1	22/60
Nanomaterials Workers	Informed Consent	33	1	20/60

Dated: February 28, 2013.

Ron A. Otten,

Director, Office of Scientific Integrity (OSI), Office of the Associate Director for Science (OADS), Office of the Director, Centers for Disease Control and Prevention.

[FR Doc. 2013–05520 Filed 3–8–13; 8:45 am]

BILLING CODE 4163–18–P

DEPARTMENT OF HEALTH AND HUMAN SERVICES

Centers for Disease Control and Prevention

[30Day-13–0739]

Agency Forms Undergoing Paperwork Reduction Act Review

The Centers for Disease Control and Prevention (CDC) publishes a list of information collection requests under review by the Office of Management and Budget (OMB) in compliance with the Paperwork Reduction Act (44 U.S.C. Chapter 35). To request a copy of these requests, call the CDC Reports Clearance Officer at (404) 639–7570 or send an email to *omb@cdc.gov.* Send written comments to CDC Desk Officer, Office of Management and Budget, Washington, DC or by fax to (202) 395–5806. Written comments should be received within 30 days of this notice.

Proposed Project

CDC Oral Health Management Information System (OMB No. 0920–0739, exp. 5/31/2013)—Extension—National Center for Chronic Disease Prevention and Public Health Promotion (NCDDPHP), Centers for Disease Control and Prevention (CDC).

Background and Brief Description

The CDC seeks to improve the oral health of the nation by targeting efforts to improve the infrastructure of state and territorial oral health departments, strengthen and enhance program capacity related to monitoring the population's oral health status and behaviors, develop effective programs to improve the oral health of children and adults, evaluate program accomplishments, and inform key stakeholders, including policy makers, of program results. Through a cooperative agreement program (Program Announcement DP08–802 and DP10–1012), CDC has provide approximately $5 million per year over five years to 20 states to strengthen their core oral health infrastructure and capacity. CDC funding also helps states reduce health disparities among high-

risk populations including, but not limited to, those of lower SES, Hispanic, African American and other ethnic groups.

NCCDPHP is currently pursuing a key initiative to improve the efficiency and effectiveness of CDC project officers who oversee the state and territorial oral health programs. An electronic management information system (MIS) to support program management, consulting and evaluation has been developed in support of the cooperative agreement. The MIS provides a central repository of information, such as the plans of the state or territorial oral health programs (their goals, objectives, performance milestones and indicators), as well as state and territorial oral health performance activities including programmatic and financial information. State oral health programs have used the MIS to submit their required semi-annual reports to CDC (CDC Oral Health Management Information System, OMB No. 0920–0739, 5/31/2013). The last report under the current FOA is due on October 30, 2013.

CDC is requesting OMB approval to extend clearance for the MIS until December 31, 2013. Information will be reported to CDC once during this period. The extension will allow to CDC to receive final reports from the state oral health programs and to provide any technical assistance or follow-up support that may be needed to produce accurate final reports. There is no change to the estimated burden per response, which is 11 hours.

All information will be collected electronically. There are no costs to respondents other than their time. The total estimated annualized burden hours are 220.

ESTIMATED ANNUALIZED BURDEN HOURS

Type of respondents	Number of respondents	Number of responses per respondent	Average burden per response (in hours)	Total burden (in hours)
State Oral Health Programs	20	1	11	220

Dated: February 28, 2013.

Ron A. Otten,

Director, Office of Scientific Integrity (OSI), Office of the Associate Director for Science (OADS), Office of the Director, Centers for Disease Control and Prevention.

[FR Doc. 2013–05518 Filed 3–8–13; 8:45 am]

BILLING CODE 4163–18–P

DEPARTMENT OF HEALTH AND HUMAN SERVICES

Centers for Disease Control and Prevention

[30Day-13–0009]

Agency Forms Undergoing Paperwork Reduction Act Review

The Centers for Disease Control and Prevention (CDC) publishes a list of information collection requests under review by the Office of Management and Budget (OMB) in compliance with the Paperwork Reduction Act (44 U.S.C. Chapter 35). To request a copy of these requests, call (404) 639–7570 or send an email to *omb@cdc.gov.* Send written comments to CDC Desk Officer, Office of Management and Budget, Washington, DC 20503 or by fax to (202) 395–5806. Written comments should be received within 30 days of this notice.

Proposed Project

National Disease Surveillance Program (OMB No. 0920–0009 Expiration 4/30/2013)—Revision—National Center for Emerging and Zoonotic Infectious Diseases (NCEZID), Centers for Disease Control and Prevention, (CDC).

Background and Brief Description

Formal surveillance of 16 separate reportable diseases has been ongoing to meet the public demand and scientific interest in accurate, consistent, epidemiologic data. These ongoing disease reports include: Creutzfeldt-Jakob Disease (CJD), Cyclosporiasis, Dengue, Hantavirus, Kawasaki Syndrome, Legionellosis, Lyme disease, Malaria, Plague, Q Fever, Reye Syndrome, Tickborne Rickettsial Disease, Trichinosis, Tularemia, Typhoid Fever, and Viral Hepatitis. Case report forms from state and territorial health departments enable CDC to collect demographic, clinical, and laboratory characteristics of cases of these diseases. We are requesting changes to the Legionellois form that will allow CDC to better detect potential clusters and outbreaks of Legionnaires' disease and to monitor changing epidemiological trends by collecting a greater level of detail for each legionellosis case. The burden to the respondents should be minimally affected by these proposed changes.

The purpose of the proposed study is to direct epidemiologic investigations, identify and monitor trends in reemerging infectious diseases or emerging modes of transmission, to search for possible causes or sources of the diseases, and develop guidelines for prevention and treatment. The data collected will also be used to recommend target areas most in need of vaccinations for selected diseases and to determine development of drug resistance. Because of the distinct nature of each of the diseases, the number of cases reported annually is different for each. There is no cost to respondents other than their time. The total burden requested is 11,447 hours.

ESTIMATED ANNUALIZED BURDEN HOURS

Type of respondent	Form name	Number of respondents	Number of responses per respondent	Average burden per response (in hrs)
Epidemiologist	CJD	20	2	20/60
Epidemiologist	Cyclosporiasis	55	10	15/60
Epidemiologist	Dengue	55	182	15/60
Epidemiologist	Hantavirus	46	3	20/60
Epidemiologist	Kawasaki Syndrome	55	8	15/60
Epidemiologist	Legionellosis	23	12	20/60

ESTIMATED ANNUALIZED BURDEN HOURS—Continued

Type of respondent	Form name	Number of respondents	Number of responses per respondent	Average burden per response (in hrs)
Epidemiologist	Lyme Disease	52	385	10/60
Epidemiologist	Malaria	55	20	15/60
Epidemiologist	Plague	11	1	20/60
Epidemiologist	Q Fever	55	1	10/60
Epidemiologist	Reye Syndrome	50	1	20/60
Epidemiologist	Tick-borne Rickettsia	55	18	10/60
Epidemiologist	Trichinosis	25	1	20/60
Epidemiologist	Tularemia	55	2	20/60
Epidemiologist	Typhoid Fever	55	6	20/60
Epidemiologist	Viral hepatitis	55	200	25/60

Dated: February 28, 2013.

Ron A. Otten,

Director, Office of Scientific Integrity (OSI), Office of the Associate Director for Science (OADS), Office of the Director, Centers for Disease Control and Prevention.

[FR Doc. 2013–05523 Filed 3–8–13; 8:45 am]

BILLING CODE 4163–18–P

DEPARTMENT OF HEALTH AND HUMAN SERVICES

Centers for Disease Control and Prevention

Board of Scientific Counselors, Office of Public Health Preparedness and Response (BSC, OPHPR)

In accordance with section 10(a)(2) of the Federal Advisory Committee Act (Pub. L. 92–463), the Centers for Disease Control and Prevention (CDC), announces the following meeting of the aforementioned committee:

Times and Dates:

April 2, 2013 9:30 a.m.–3:00 p.m. (BSC, OPHPR meeting)

April 3, 2013 8:30 a.m.–3:30 p.m. (Joint meeting of the BSC, OPHPR and the National Biodefense Science Board [NBSB])

Place: CDC, 1600 Clifton Road NE., Roybal Campus, Building 19, Room 256 Atlanta, Georgia 30329.

Status: Open to the public limited only by the space available. The meeting room will accommodate up to 30 people. Public participants should pre-register for the meeting as described in Additional Information for Public Participants.

Purpose: This Board is charged with providing advice and guidance to the Secretary, Department of Health and Human Services (HHS), the Assistant Secretary for Health (ASH), the Director, Centers for Disease Control and Prevention (CDC), and the Director, Office of Public Health Preparedness and Response (OPHPR), concerning strategies and goals for the programs and research within OPHPR, monitoring the overall strategic direction and focus of the OPHPR Divisions and Offices, and administration and oversight of peer review of OPHPR scientific programs. For additional information about the Board, please visit: *http://www.cdc.gov/phpr/science/counselors.htm.*

Matters To Be Discussed: Agenda items for this meeting include: (1) Briefings and BSC deliberation on the following topics: Public Health Preparedness and Response Policy Updates; improving critical information sharing across CDC; biosecurity risk evaluation software; measuring operational readiness; (2) BSC liaison representative updates to the Board highlighting organizational activities relevant to the OPHPR mission. Day 2 of the meeting will include a joint Federal Advisory Committee briefing with NBSB, deliberation and vote on the recommendations and report written by the joint BSC, OPHPR–NBSB Strategic National Stockpile ad hoc working group. [The National Biodefense Science Board (NBSB) was created under the authority of the Pandemic and All-Hazards Preparedness Act, signed into law on December 19, 2006. The Board is a FACA committee utilized by the Office of the Assistant Secretary for Preparedness and Response. The NBSB was established to provide expert advice and guidance to the Secretary of the U.S. Department of Health and Human Services (HHS) on scientific, technical, and other matters of special interest to HHS regarding activities to prevent, prepare for, and respond to adverse health effects of public health emergencies resulting from chemical, biological, nuclear, and radiological events, whether naturally occurring, accidental, or deliberate.]

Agenda items are subject to change as priorities dictate.

Additional Information for Public Participants: Members of the public that wish to attend this meeting should pre-register by submitting the following information by email, facsimile, or phone (see Contact Person for More Information) no later than 12:00 noon (EDT) on Monday, March 25, 2013:

- Full Name,
- Organizational Affiliation,
- Complete Mailing Address,
- Citizenship, and
- Phone Number or Email Address

Contact Person for More Information: Marquita Black, Office of Science and Public Health Practice Executive Assistant, Centers for Disease Control and Prevention, 1600 Clifton Road NE., Mailstop D–44, Atlanta, Georgia 30333, Telephone: (404) 639–7325; Facsimile: (404) 639–7977; Email: *OPHPR.BSC.Questions@cdc.gov.*

The Director, Management Analysis and Services Office, has been delegated the authority to sign **Federal Register** notices pertaining to announcements of meetings and other committee management activities for both the Centers for Disease Control and Prevention, and Agency for Toxic Substances and Disease Registry.

Elaine L. Baker,

Director, Management Analysis and Services Office, Centers for Disease Control and Prevention.

[FR Doc. 2013–05561 Filed 3–8–13; 8:45 am]

BILLING CODE 4163–18–P

DEPARTMENT OF HEALTH AND HUMAN SERVICES

Centers for Disease Control and Prevention (CDC)

Request for Nominations of Candidates To Serve on the Advisory Committee on Immunization Practices, Centers for Disease Control and Prevention, Department of Health and Human Services

The CDC is soliciting nominations for membership on the Advisory Committee on Immunization Practices (ACIP). The ACIP consists of 15 experts in fields associated with immunization, who are selected by the Secretary of the United States Department of Health and Human Services (DHHS) to provide advice and guidance to the Secretary, the Assistant Secretary for Health, and the CDC on the control of vaccine-preventable diseases. The role of the ACIP is to provide advice that will lead to a reduction in the incidence of vaccine preventable diseases in the United States, and an increase in the safe use of vaccines and related biological products. The committee also establishes, reviews, and as appropriate, revises the list of vaccines for administration to children eligible to receive vaccines through the Vaccines for Children (VFC) Program.

Nominations are being sought for individuals who have expertise and qualifications necessary to contribute to the accomplishments of the committee's objectives. Nominees will be selected based on expertise in the field of immunization practices; multi-disciplinary expertise in public health; expertise in the use of vaccines and immunologic agents in both clinical and preventive medicine; knowledge of vaccine development, evaluation, and vaccine delivery; or knowledge about consumer perspectives and/or social and community aspects of immunization programs. Federal employees will not be considered for membership. Members may be invited to serve for four-year terms.

The next cycle of selection of candidates will begin in the fall of 2013, for selection of potential nominees to replace members whose terms will end on June 30, 2014. Selection of members is based on candidates' qualifications to contribute to the accomplishment of ACIP objectives (*http://www.cdc.gov/vaccines/acip/index.html*).

The U.S. Department of Health and Human Services policy stipulates that committee membership be balanced in terms of professional training and background, points of view represented, and the committee's function. Consideration is given to a broad representation of geographic areas within the U.S., with equitable representation of the sexes, ethnic and racial minorities, and persons with disabilities. Nominees must be U.S. citizens, and cannot be full-time employees of the U.S. Government.

Candidates should submit the following items:

- Current *curriculum vitae,* including complete contact information (telephone numbers, mailing address, email address)
- At least one letter of recommendation from person(s) not employed by the U.S. Department of Health and Human Services*

The deadline for receipt of all application materials (for consideration for term beginning July 1, 2014) is November 15, 2013. All files must be submitted electronically as email attachments to: Mrs. Felicia Betancourt, c/o ACIP Secretariat, Email: *FBetancourt@cdc.gov.*

Nominations may be submitted by the candidate him- or herself, or by the person/organization recommending the candidate.

The Director, Management Analysis and Services Office, has been delegated the authority to sign **Federal Register** notices pertaining to announcements of meetings and other committee management activities for both the Centers for Disease Control and Prevention and the Agency for Toxic Substances and Disease Registry.

Elaine L. Baker,

Director, Management Analysis and Services Office, Centers for Disease Control and Prevention.

[FR Doc. 2013–05560 Filed 3–8–13; 8:45 am]

BILLING CODE 4163–18–P

*Candidates may submit letter(s) from current HHS employees if they wish, but at least one letter must be submitted by a person *not* employed by HHS (e.g., CDC, NIH, FDA, etc.).

DEPARTMENT OF HEALTH AND HUMAN SERVICES

Food and Drug Administration

[Docket No. FDA–2013–D–0168]

Draft Guidance for Industry and Food and Drug Administration Staff: Recommendations for Labeling Medical Products To Inform Users That the Product or Product Container Is Not Made With Natural Rubber Latex; Availability

AGENCY: Food and Drug Administration, HHS.

ACTION: Notice.

SUMMARY: The Food and Drug Administration (FDA) is announcing the availability of the draft guidance document entitled ''Draft Guidance for Industry and FDA Staff: Recommendations for Labeling Medical Products To Inform Users That the Product or Product Container Is Not Made With Natural Rubber Latex.'' The purpose of this draft guidance is to make recommendations on the appropriate language to include in the labeling of a medical product to convey that natural rubber latex was not used as a material in the manufacture of the product or product container. FDA is concerned that statements submitted for inclusion in medical product labeling such as ''latex-free,'' ''does not contain natural rubber latex,'' or ''does not contain latex'' are not accurate because it is not possible to reliably assure that there is an absence of the allergens associated with hypersensitivity reactions to natural rubber latex in the medical product. This draft guidance is not final nor is it in effect at this time.

DATES: Although you can comment on any guidance at any time (see 21 CFR 10.115(g)(5)), to ensure that the Agency considers your comment on this draft guidance before it begins work on the final version of the guidance, submit written or electronic comments on the draft guidance by June 10, 2013.

ADDRESSES: Submit written requests for single copies of the draft guidance document entitled ''Draft Guidance for Industry and FDA Staff: Recommendations for Labeling Medical Products To Inform Users That the Product or Product Container Is Not Made With Natural Rubber Latex'' to the Division of Small Manufacturers, International and Consumer Assistance, Center for Devices and Radiological Health, Food and Drug Administration, 10903 New Hampshire Ave., Bldg. 66, Rm. 4613, Silver Spring, MD 20993–0002. Send one self-addressed adhesive label to assist that office in processing your request, or fax your request to 301–847–8149. See the **SUPPLEMENTARY INFORMATION** section for information on electronic access to the guidance.

Submit electronic comments to *http://www.regulations.gov.* Submit written comments concerning this draft guidance to the Division of Dockets Management (HFA–305), Food and Drug Administration, 5630 Fishers Lane, Rm. 1061, Rockville, MD 20852. Identify comments with the docket number found in brackets in the heading of this document.

FOR FURTHER INFORMATION CONTACT: Michael T. Bailey, Center for Devices and Radiological Health, Food and Drug

Administration, 10903 New Hampshire Ave., Bldg. 66, Rm. G120, Silver Spring, MD 20993–0002, 301–796–6530, *Michael.Bailey@fda.hhs.gov.*

SUPPLEMENTARY INFORMATION:

I. Background

Contact with devices containing natural rubber has been associated with anaphylaxis in individuals allergic to natural rubber latex proteins. FDA medical device regulations include provisions that require certain labeling statements on medical devices if the device or device packaging is composed of or contains natural rubber that contacts humans. (See 21 CFR 801.437.) The biological products regulations require that the package label or package insert declare the presence of known sensitizing substances, but do not specifically mention natural rubber latex (21 CFR 610.61(l)). Specific regulations for labeling of natural rubber latex content in medical products or their containers do not exist for drugs or veterinary products.

At this time, there are no regulations requiring the labeling of a medical product to state that natural rubber latex was not used as a material in the manufacture of a medical product or medical product container. However, some manufacturers have included the promotional statements ''latex-free'' or ''does not contain latex'' in medical product labeling to inform users that natural rubber latex, dry natural rubber, or synthetic derivatives of natural rubber latex were not used. These labeling statements are not sufficiently specific, not necessarily scientifically accurate and may be misunderstood or applied too widely, and therefore, it is inappropriate to include such statements in medical product labeling. Use of these terms may give users allergic to natural rubber latex a false sense of security when using a medical product. The draft guidance provides recommendations for scientifically accurate labeling that can be used by manufacturers who wish to convey that natural rubber latex was not used as a material in the manufacture of a medical product or medical product container.

II. Significance of Guidance

This draft guidance document is being issued consistent with FDA's good guidance practices regulation (21 CFR 10.115). The draft guidance, when finalized, will represent the Agency's current thinking on labeling medical products to inform users that a product or product container was not made with natural rubber latex. It does not create or confer any rights for or on any person and does not operate to bind FDA or the public. An alternative approach may be used if such approach satisfies the requirements of the applicable statute and regulations.

III. Electronic Access

Persons interested in obtaining a copy of the draft guidance may do so by using the Internet. A search capability for all CDRH guidance documents is available at *http://www.fda.gov/MedicalDevices/DeviceRegulationandGuidance/GuidanceDocuments/default.htm. Guidance documents also are available at http://www.regulations.gov.* To receive ''Draft Guidance for Industry and FDA Staff: Recommendations for Labeling Medical Products to Inform Users That the Product or Product Container Is Not Made With Natural Rubber Latex,'' you may either send an email request to *dsmica@fda.hhs.gov* for an electronic copy of the document or send a fax request to 301–847–8149 to receive a hard copy. Please use the document number 1768 to identify the guidance you are requesting.

IV. Paperwork Reduction Act of 1995

This draft guidance refers to currently approved collections of information found in FDA regulations. These collections of information are subject to review by the Office of Management and Budget (OMB) under the Paperwork Reduction Act of 1995 (44 U.S.C. 3501–3520) (the PRA). The collections of information in 21 CFR part 801 are approved under OMB control number 0910–0485 and the collections of information in 21 CFR part 610 subpart G are approved under OMB control number 0910–0338.

The labeling provisions recommended in this draft guidance are not subject to review by OMB because they do not constitute a ''collection of information'' under the PRA. Rather, the recommended labeling is a ''public disclosure of information originally supplied by the Federal government to the recipient for the purpose of disclosure to the public'' (5 CFR 1320.3(c)(2)).

V. Comments

Interested persons may submit either electronic comments regarding this document to *http://www.regulations.gov* or written comments to the Division of Dockets Management (see **ADDRESSES**). It is only necessary to send one set of comments. Identify comments with the docket number found in brackets in the heading of this document. Received comments may be seen in the Division of Dockets Management between 9 a.m. and 4 p.m., Monday through Friday, and will be posted to the docket at *http://www.regulations.gov.*

VI. Reference

The following reference has been placed on display in the Division of Dockets Management (see **ADDRESSES**) and may be seen by interested persons between 9 a.m. and 4 p.m., Monday through Friday, and are available electronically at *http://www.regulations.gov.*

1. Ahmed, S.M., T.C. Aw, and A. Adisesh, ''Toxicological and Immunological Aspects of Occupational Latex Allergy,'' *Toxicological Reviews,* vol. 23, pp. 123–134, 2004.

Dated: March 5, 2013.

Leslie Kux,

Assistant Commissioner for Policy.

[FR Doc. 2013–05554 Filed 3–8–13; 8:45 am]

BILLING CODE 4160–01–P

DEPARTMENT OF HEALTH AND HUMAN SERVICES

Food and Drug Administration

[Docket No. FDA–2012–N–0962]

Drug Development for Chronic Fatigue Syndrome and Myalgic Encephalomyelitis; Public Workshop

AGENCY: Food and Drug Administration, HHS.

ACTION: Notice of public workshop; request for comments.

The Food and Drug Administration (FDA), Center for Drug Evaluation and Research, is announcing a public workshop to discuss how best to facilitate and expedite the development of safe and effective drug therapies to treat signs and symptoms related to chronic fatigue syndrome (CFS) and myalgic encephalomyelitis (ME). FDA has determined that CFS and ME are serious conditions for which there are no approved drug treatments. On April 25, 2013, as part of FDA's Patient-Focused Drug Development initiative, patients will provide feedback on disease impact on quality of life and individual experience with current treatment regimens. On April 26, 2013, there will be discussions with academic and Government experts, patient advocates, patients, and clinicians on how to identify sound, quantitative outcome measures that can be used in clinical trials to determine whether disease symptoms improve with specific drug interventions.

Date and Time: The public workshop will be held on April 25, 2013, from 1 p.m. to 5 p.m., and on April 26, 2013, from 8:30 a.m. to 5 p.m.

Location: The public workshop will be held at the Bethesda Marriott, 5151 Pooks Hill Rd., Bethesda, MD 20814, 301–897–9400, Fax: 301–897–0192.

Contact Persons:

Mary Gross, Center for Drug Evaluation and Research, Food and Drug Administration, 10903 New Hampshire Ave., Silver Spring, MD 20993–0002, 301–796–3519, *Mary.Gross@fda.hhs.gov;*

Randi Clark, Center for Drug Evaluation and Research, Food and Drug Administration, 10903 New Hampshire Ave., Silver Spring, MD 20993–0002, 301–796–4287, *Randi.Clark@fda.hhs.gov;* or

Sara Eggers, Center for Drug Evaluation and Research, Food and Drug Administration, 10903 New Hampshire Ave., Silver Spring, MD 20993–0002, 301–796–4904, *Sara.Eggers@fda.hhs.gov.*

Registration and Requests to Participate in Panel Discussions: If you wish to attend the public workshop or participate in a panel discussion, you must register by submitting an electronic or written request by 5 p.m. on April 8, 2013. Submit electronic requests to *http://mecfsmeeting.eventbrite.com.* Submit written requests to Mary Gross, Randi Clark, or Sara Eggers (see *Contact Persons*). You must provide your name and business, organization, or personal affiliation as applies (e.g., industry, government, patient). Patients who are interested in presenting comments as part of the initial panel discussions may indicate which topic(s) they wish to address (see section II of this document).

The public workshop is free and seating will be on a first-come, first-served basis. We recommend that you register early because seating is limited. FDA may limit both the number of participants from individual organizations and the total number of attendees, based on space limitations. Registrants will receive confirmation once they have been accepted to attend the meeting. For those who cannot attend in person, a live Webcast of the meeting will be located at *http://mecfsmeeting.eventbrite.com.* For information about joining the meeting via Webcast, please go to *http://www.fda.gov/Drugs/NewsEvents/ucm319188.htm.*

FDA will post an agenda of the public workshop and other background material 5 days before the workshop at *http://www.fda.gov/Drugs/NewsEvents/ucm319188.htm.*

You may submit questions about the public workshop to *ME-CFS-Meeting@fda.hhs.gov* prior to the April 25 and 26 workshop dates.

If you need special accommodations because of a disability, contact Mary Gross, Randi Clark, or Sara Eggers (see *Contact Persons*) at least 7 days in advance.

Comments: Submit either electronic or written comments by April 8, 2013, to receive consideration. Submit electronic comments to *www.regulations.gov.* Submit written comments to the Division of Dockets Management (HFA–305), Food and Drug Administration, 5630 Fishers Lane, rm. 1061, Rockville, MD 20852. It is only necessary to send one set of comments. Identify comments with the docket number found in brackets in the heading of this document. Received comments may be seen in the Division of Dockets Management between 9 a.m. and 4 p.m., Monday through Friday, and will be posted to the docket at *http://www.regulations.gov.* Electronic or written comments will be accepted after the meeting until August 2, 2013.

FDA will also hold an open public comment period on April 25 to give the public an opportunity to comment on topics that may not have been addressed in the discussion of topics 1 and 2 (see section II of this document). Workshop participants should register to participate in the open public comment period by April 8, 2013, and will be asked to provide a brief summary of their comments.

SUPPLEMENTARY INFORMATION

I. Background

The Food and Drug Administration, Center for Drug Evaluation and Research, is announcing a scientific workshop to discuss how best to facilitate and expedite the development of safe and effective drug therapies to treat signs and symptoms related to CFS and ME. FDA has determined that CFS and ME are serious conditions for which there are no approved drug treatments. On April 25, 2013, patients will give feedback on disease impact on quality of life and their experiences with current treatment regimens. On April 26, 2013, there will be discussions with academic and Government experts, patient advocates, patients, and clinicians on how to identify sound, quantitative outcome measures to determine whether disease symptoms improve with specific interventions. For purposes of this workshop, the terms ''CFS'' and ''ME'' have been used interchangeably in describing the conditions. These terms are used as a frame of reference only. The terms are intended to be inclusive and make no judgment on the cause of different symptom complexes. Drug development focuses on quantitative measures of benefit (e.g., symptom improvement) in either the entire population or in a defined subset, not on the name of the disease. In some cases, evaluating symptoms individually may be the optimal approach, while in others, evaluating a constellation of symptoms may be better.

II. Purpose and Scope of the Public Workshop

FDA has selected CFS and ME to be the focus for a workshop under the Patient-Focused Drug Development initiative, an effort that involves obtaining a better understanding of patients' perspectives on the severity of the disease and assessment of currently available treatment options. Patient-Focused Drug Development is being conducted to fulfill FDA performance commitments made as part of the authorization of the Prescription Drug User Fee Act under Title I of the Food and Drug Safety and Innovation Act (FDASIA) (Pub. L. 112–144). The full set of performance commitments is available on the FDA Web site at *http://www.fda.gov/downloads/forindustry/userfees/prescriptiondruguserfee/ucm270412.pdf.*

On Day 1 of the workshop (April 25, 2013) FDA will gather patients' perspectives on CFS and ME as part of the Patient-Focused Drug Development initiative. Day 1 will focus on two main topics: (1) Disease symptoms and daily impacts that matter most to patients; and (2) Patients' perspectives on current approaches to treating CFS and ME. Discussion questions for topics 1 and 2 are as follows:

Topic 1: Disease Symptoms and Daily Impacts That Matter Most to Patients

1. What are the most significant symptoms that you experience resulting from your condition? (Examples may include prolonged exhaustion, confusion, muscle pain, heat or cold intolerance.)

2. What are the most negative impacts on your daily life that result from your condition and its symptoms? (Examples may include difficulty with specific activities, such as sleeping through the night.)

a. How does the condition affect your daily life on the best days and worst days?

b. What changes have you had to make in your life because of your condition?

Topic 2: Patients' Perspectives on Current Approaches To Treating CFS and ME

1. What treatments are you currently using to help treat your condition or its symptoms? (Examples may include FDA-approved medicines, over-the-counter products, and other therapies, including non-drug therapies such as activity limitations.)

a. What specific symptoms do your treatments address?

b. How has your treatment regimen changed over time and why?

2. How well does your current treatment regimen treat the most significant symptoms of your disease?

a. Have these treatments improved your daily life (for example, improving your ability to do specific activities)? Please explain.

b. How well have these treatments worked for you as your condition has changed over time?

c. What are the most significant downsides of these treatments (for example, specific side effects)?

For each of these topics, a brief initial patient panel discussion will begin the dialogue, followed by a facilitated discussion inviting comments from other patient participants. FDA has not yet identified the panel participants. As part of the meeting registration, patients who are interested in presenting comments as part of the initial panel discussions may indicate which topic(s) they wish to address and will be asked to provide a brief summary of responses to the questions listed below. FDA will confirm with patients who have been identified to provide comments as part of the opening panel discussion in advance of the workshop.

FDA will try to accommodate all participants who wish to speak on Day 1, either through the panel discussions, audience participation, or the open public comment period; however, the duration of comments may be limited by time constraints. Those who are unable to attend the meeting in person, but who would like to provide their perspective on the discussion questions for topics 1 and 2 are invited to submit electronic or written comments to the Division of Docket Management (see *Comments*).

Day 2 of the workshop (April 26, 2013), will include a scientific discussion on how best to facilitate and expedite the development of safe and effective drug therapies for signs and symptoms related to CFS and ME. Presentations and panel discussions will include the following:

- Lessons learned from previous studies;
- The role of drug repurposing;
- Pathways to expediting drug therapies;
- Appropriate clinical trial design in CFS and ME;
- Outcome measures to assess efficacy; and
- Potential valid endpoint measurements of symptom improvement.

III. Transcripts

Please be advised that a transcript of the workshop will be available for review at the Division of Dockets Management (see *Comments*) and on the Internet at *http://www.regulations.gov.* The transcript will also be available in either hardcopy or on CD–ROM, after submission of a Freedom of Information request. Written requests are to be sent to the Division of Freedom of Information (ELEM–1029), Food and Drug Administration, 12420 Parklawn Dr., Element Bldg., Rockville, MD 20857.

Dated: March 6, 2013.

Leslie Kux,

Assistant Commissioner for Policy.

[FR Doc. 2013–05562 Filed 3–8–13; 8:45 am]

BILLING CODE 4160–01–P

DEPARTMENT OF HEALTH AND HUMAN SERVICES

National Institutes of Health

Center for Scientific Review; Notice of Closed Meeting

Pursuant to section 10(d) of the Federal Advisory Committee Act, as amended (5 U.S.C. App.), notice is hereby given of the following meeting.

The meeting will be closed to the public in accordance with the provisions set forth in sections 552b(c)(4) and 552b(c)(6), Title 5 U.S.C., as amended. The grant applications and the discussions could disclose confidential trade secrets or commercial property such as patentable material, and personal information concerning individuals associated with the grant applications, the disclosure of which would constitute a clearly unwarranted invasion of personal privacy.

Name of Committee: Center for Scientific Review Special Emphasis Panel; ODCS Small Business.

Date: March 13–14, 2013.

Time: 8:00 a.m. to 5:00 p.m.

Agenda: To review and evaluate grant applications.

Place: National Institutes of Health, 6701 Rockledge Drive, Bethesda, MD 20892, (Virtual Meeting).

Contact Person: Yi-Hsin Liu, Ph.D., Scientific Review Officer, Center for Scientific Review, National Institutes of Health, 6701 Rockledge Drive, Room 4214, MSC 7814, Bethesda, MD 20892, 301–435–1781, *liuyh@csr.nih.gov.*

This notice is being published less than 15 days prior to the meeting due to the timing limitations imposed by the review and funding cycle.

(Catalogue of Federal Domestic Assistance Program Nos. 93.306, Comparative Medicine; 93.333, Clinical Research, 93.306, 93.333, 93.337, 93.393–93.396, 93.837–93.844, 93.846–93.878, 93.892, 93.893, National Institutes of Health, HHS)

Dated: March 5, 2013.

Michelle Trout,

Program Analyst, Office of Federal Advisory Committee Policy.

[FR Doc. 2013–05511 Filed 3–8–13; 8:45 am]

BILLING CODE 4140–01–P

DEPARTMENT OF HEALTH AND HUMAN SERVICES

National Institutes of Health

Center for Scientific Review; Notice of Closed Meetings

Pursuant to section 10(d) of the Federal Advisory Committee Act, as amended (5 U.S.C. App.), notice is hereby given of the following meetings.

The meetings will be closed to the public in accordance with the provisions set forth in sections 552b(c)(4) and 552b(c)(6), Title 5 U.S.C., as amended. The grant applications and the discussions could disclose confidential trade secrets or commercial property such as patentable material, and personal information concerning individuals associated with the grant applications, the disclosure of which would constitute a clearly unwarranted invasion of personal privacy.

Name of Committee: Center for Scientific Review Special Emphasis Panel; Member Conflict: Hematology and Vascular Pathobiology.

Date: April 1–2, 2013.

Time: 10:00 a.m. to 7:00 p.m.

Agenda: To review and evaluate grant applications.

Place: National Institutes of Health, 6701 Rockledge Drive, Bethesda, MD 20892 (Virtual Meeting).

Contact Person: Ai-Ping Zou, MD, Ph.D., Scientific Review Officer, Center for Scientific Review, National Institutes of Health, 6701 Rockledge Drive, Room 4118, MSC 7814, Bethesda, MD 20892, 301–408–9497, *zouai@csr.nih.gov.*

Name of Committee: Center for Scientific Review Special Emphasis Panel; Member Conflict: AIDS and AIDS Related Research.

Date: April 1, 2013.

Time: 12:00 p.m. to 3:00 p.m.

Agenda: To review and evaluate grant applications.

Place: National Institutes of Health, 6701 Rockledge Drive, Bethesda, MD 20892 (Telephone Conference Call).

Contact Person: Eduardo A Montalvo, Ph.D., Scientific Review Officer, Center for Scientific Review, National Institutes of Health, 6701 Rockledge Drive, Room 5108, MSC 7852, Bethesda, MD 20892, (301) 435–1168, *montalve@csr.nih.gov*.

(Catalogue of Federal Domestic Assistance Program Nos. 93.306, Comparative Medicine; 93.333, Clinical Research, 93.306, 93.333, 93.337, 93.393–93.396, 93.837–93.844, 93.846–93.878, 93.892, 93.893, National Institutes of Health, HHS)

Dated: March 5, 2013.

Michelle Trout,

Program Analyst, Office of Federal Advisory Committee Policy.

[FR Doc. 2013–05510 Filed 3–8–13; 8:45 am]

BILLING CODE 4140–01–P

DEPARTMENT OF HOUSING AND URBAN DEVELOPMENT

[Docket No. FR–5447–C–01]

Notice of Formula Allocations and Program Requirements for Neighborhood Stabilization Program Formula Grants; Correction

AGENCY: Office of the Assistant Secretary for Community Planning and Development, HUD.

ACTION: Notice of Formula Allocations and Program Requirements for Neighborhood Stabilization Program Formula Grants; Correction.

SUMMARY: On October 19, 2010, HUD published the ''Notice of Formula Allocations and Program Requirements for Neighborhood Stabilization Program Formula Grants'' (Unified NSP Notice) in the **Federal Register**, at 75 FR 64322. That notice provided unified program requirements for the NSP1 grantees and NSP3 grantees. The allocation formula, application process and program requirements for NSP1 grantees were originally published in an October 6, 2008 **Federal Register** Notice at 73 FR 58330 and amended by a June 19, 2009, April 9, 2010, and an August 27, 2010 **Federal Register** Notice at 74 FR 29223, 75 FR 18228 and 75 FR 52772, respectively. This notice is revising the Unified NSP Notice to include the provision of corrective action(s) or sanctions among HUD's remedial actions for failure of NSP1 grantees to meet the four year expenditure requirement.

FOR FURTHER INFORMATION CONTACT: Stanley Gimont, Director, Office of Block Grant Assistance, Office of Community Planning and Development, Department of Housing and Urban Development, 451 Seventh Street SW., Room 7286, Washington, DC 20410, telephone number 202–708–3587 (this is not a toll-free number). Persons with hearing or speech impairments may access this number via TTY by calling the Federal Relay Service at 800–877–8339. FAX inquiries may be sent to Mr. Gimont at 202–401–2044.

SUPPLEMENTARY INFORMATION:

Program Background and Purpose

The Neighborhood Stabilization Program (or NSP) was established by the Housing and Economic Recovery Act of 2008 (HERA) (Pub. L. 110–289, approved July 30, 2008), specifically Division B, Title III of HERA, for the purpose of stabilizing communities that have suffered from foreclosures and abandonment. HERA appropriated $3.92 billion to be made available to all states and selected local governments on a formula basis, commonly referred to as NSP1.

The purpose of the funds awarded under NSP is to target the stabilization of neighborhoods negatively affected by properties that have been foreclosed upon and abandoned. The Unified NSP Notice provides further background for the program, the program principles, and the objectives and outcomes of the NSP program.

NSP is a component of the CDBG program, authorized under Housing and Community Development Act of 1974 (HCD Act) (42 U.S.C. 5301 et seq.).

Summary of Corrections

M. Timeliness of Use and Expenditure of NSP Funds

Background

This notice is revising section II.M of the Unified NSP Notice to include providing for corrective action(s) or sanctions among HUD's remedial actions for failure of NSP1 grantees to meet the 4 year expenditure requirement. As provided in the ''Background'' of section M of the Unified NSP Notice, HUD intended that recapture, corrective actions or sanctions be among the available remedies for all NSP grantees. However, two of these remedies were inadvertently omitted from the requirement. This revision adds the omitted language.

Revised Requirement

Section II.M.2 of the Unified NSP Notice is revised to read:

Timely expenditure of NSP1 funds. The timely distribution or expenditure requirements of sections 24 CFR 570.494 and 570.902 are waived to the extent necessary to allow the following alternative requirement: All NSP1 grantees must expend on eligible NSP activities an amount equal to or greater than the initial allocation of NSP1 funds within 4 years of receipt of those funds or HUD will recapture and reallocate the amount of funds not expended or provide for other corrective action(s) or sanction.

Dated: March 1, 2013.

Mark Johnston,

Deputy Assistant Secretary for Special Needs.

[FR Doc. 2013–05526 Filed 3–8–13; 8:45 am]

BILLING CODE 4210–67–P

DEPARTMENT OF THE INTERIOR

Fish and Wildlife Service

[FWS–R3–ES–2013–N051; FXES11130300000–134–FF03E00000]

Notice of Availability of Draft Habitat Conservation Plan; Receipt of Application for Incidental Take Permit; Enbridge Pipelines (Lakehead), L.L.C.

AGENCY: Fish and Wildlife Service, Interior.

ACTION: Notice of availability.

SUMMARY: We, the U.S. Fish and Wildlife Service (Service, USFWS), have received an application from Enbridge Pipelines (Lakehead) L.L.C. (applicant), for an incidental take permit (ITP) under the Endangered Species Act of 1973 (ESA). If approved, the ITP would authorize incidental take of the federally endangered Hine's Emerald Dragonfly (hereafter ''HED''). The applicant has prepared a low-effect habitat conservation plan (HCP) to cover activities associated with pipeline maintenance work in Garfield Township, Mackinac County, Michigan. We invite comments from the public on the application, which includes the low-effect HCP, which has been determined to be eligible for a Categorical Exclusion under the National Environmental Policy Act of 1969, as amended (NEPA).

DATES: To ensure consideration, please send your written comments on or before April 10, 2013.

ADDRESSES: Send written comments via U.S. mail to the Field Supervisor, Attn: Barbara Hosler, U.S. Fish and Wildlife Service, 2651 Coolidge Road East, Ste. 101, Lansing, MI 48823. Phone: 517–351–2555. Fax: 517–351–1443. TTY: 1–800–877–8339, or by electronic mail to *Barbara_Hosler@fws.gov*.

FOR FURTHER INFORMATION CONTACT: Barb Hosler, (517) 351–6326

SUPPLEMENTARY INFORMATION: We have received an application from Enbridge

Pipelines (Lakehead) L.L.C., Inc., for an incidental take permit (ITP) under the Endangered Species Act of 1973 (16 U.S.C. 1531 et seq.; ESA). If approved, the ITP would authorize incidental take of the Hine's Emerald Dragonfly (hereafter ''HED''; *Somatochlora hineana*).

Under the ESA, we announce that we have gathered the information necessary to evaluate the application for permit issuance, including the HCP, which provides measures to minimize and mitigate the effects of the proposed incidental take of the HED.

Background

Pipeline maintenance work is planned by Enbridge Pipelines (Lakehead) L.L.C. (Enbridge) in Garfield Township, Mackinac County, Michigan. The purpose of the planned work is to inspect and, if necessary, repair three sections of Enbridge's Line 5 (30-inch diameter) pipeline located in and adjacent to a tributary to O'Niel Creek and associated wetlands. The sections of pipe require excavation in order to complete. The proposed excavation is estimated to be 30 ft wide, 140 ft long, and up to 10 ft deep.

The maintenance of the pipeline at the identified locations is being completed as required by the Department of Transportation (DOT) regulations in the Code of Federal Regulations (CFR) at 49 CFR Part 195.452 on Integrity Management. The proposed work is expected to take approximately 14 to 21 days to complete during winter months in early 2013, and will be initiated after the required permits are obtained. The permits will cover all activities associated with accessing the work site during winter, including excavation, pipeline inspection and repair, dewatering, temporary work area and spoil pile stock, backfilling excavation, and site restoration. The area included is 2.64 acres. The extent of direct impact by the project is 0.97 acres within the HCP boundary.

Surveys have not been conducted for Hine's Emerald Dragonfly at the project site. An Incidental Take Permit is being sought because potential habitat is present and will be impacted by the proposed project. Temporary impacts will result from winter excavation, dewatering, and backfilling, which may destroy overwintering dragonfly larvae. No impacts to adults, or adult foraging and breeding habitat, are anticipated.

Based on population estimates of known populations within Michigan, the number of larvae within the 4,200 ft^2 (390 m^2) excavation footprint could be within the range of 156—328 larvae. Assuming the worst-case impact using highest larval densities reported for Michigan, direct impact could be mortality of 328 larvae from winter-time excavation. The impact area of the excavation represents approximately 3.5 percent of the potential habitat at this site. If number of larvae in the habitat is proportional to the habitat area, the density estimate of 0.84 larvae/m^2 yields an overall population estimate of over 9,300 larvae. The maximum estimated impact of 328 larvae represents 3.5 percent of this total.

Upon completion of the work, the site will be restored and mulched. The stream bank will be reinforced with a biolog consisting of coconut fibers that have been compressed and stuffed into a netting. Biolog anchorage shall be in accordance with the manufacturer's recommendations. The excavation will be mulched with weed-free mulch or an erosion control mat. The excavation area will be revegetated after soil thaw (May 1–June 1) with a wet meadow seed mixture comprised of regionally appropriate native species. Seeding will be done by hand or with a hand-held seeder.

Compensatory mitigation will consist of a one-time payment of $12,000 to the National Fish and Wildlife Foundation (NFWF). The payment will be made at the time the incidental take permit is issued and will be earmarked for conservation programs to benefit Hine's emerald dragonfly.

Monitoring will be conducted during and after pipeline maintenance to document the extent of actual excavation and site restoration. No surveys are proposed for adult or larval dragonflies.

Proposed Action

Section 9 of the ESA prohibits the ''taking'' of threatened and endangered species. However, provided certain criteria are met, we are authorized to issue permits under section 10(a)(1)(B) of the ESA for take of federally listed species, when, among other things, such a taking is incidental to, and not the purpose of, otherwise lawful activities. Under the ESA, the term ''take'' means to harass, harm, pursue, hunt, shoot, wound, kill, trap, capture, or collect endangered and threatened species, or to attempt to engage in any such conduct. Our implementing regulations define ''harm'' as significant habitat modification or degradation that results in death or injury to listed species by significantly impairing essential behavioral patterns, including breeding, feeding, or sheltering (50 CFR 17.3). Harass, as defined, means ''an intentional or negligent act or omission which creates the likelihood of injury to wildlife by annoying it to such an extent as to significantly disrupt normal behavioral patterns which include, but are not limited to, breeding, feeding, or sheltering'' (50 CFR 17.3). However, under specified circumstances, the Service may issue permits that allow the take of federally listed species, provided that the take that occurs is incidental to, but not the purpose of, an otherwise lawful activity.

Regulations governing permits for endangered and threatened species are at 50 CFR 17.22 and 17.32, respectively. Section 10(a)(1)(B) of the Act contains provisions for issuing such incidental take permits to non-Federal entities for the take of endangered and threatened species, provided the following criteria are met: (1) The taking will be incidental; (2) The applicant will, to the maximum extent practicable, minimize and mitigate the impact of such taking; (3) The applicant will develop a proposed HCP and ensure that adequate funding for the HCP will be provided; (4) The taking will not appreciably reduce the likelihood of the survival and recovery of the species in the wild; and (5) The applicant will carry out any other measures that the Service may require as being necessary or appropriate for the purposes of the HCP.

The applicant seeks an incidental take permit for proposed covered activities within a 2.64-acre permit area. The draft HCP analyzes take attributable to the applicant's proposed activities. If issued, the ITP would authorize potential incidental take of HED consistent with the applicant's HCP. To issue the permit, the Service must find that the application, including its HCP, satisfies the criteria of section 10(a)(1)(B) of the ESA and the Service's implementing regulations at 50 CFR Part 13, 17.22, and 17.32.

Reviewing Documents and Submitting Comments

Please refer to the Enbridge HCP when submitting comments. The permit application and supporting documents (ITP application, HCP, EAS) may be obtained on the Internet at the following address: *http://www.fws.gov/midwest/endangered/permits/hcp/r3hcps.html.*

Persons without access to the Internet may obtain copies of the draft HCP and associated documents by contacting the Service office described under **ADDRESSES**, above. The draft document will also be available for public inspection, by appointment, during normal business hours (8 a.m. to 4 p.m.) at the office described under **ADDRESSES** above.

Written comments will be accepted as described under **ADDRESSES**, above.

Public Availability of Comments

Written comments we receive become part of the public record associated with this action. Before including your address, phone number, email address, or other personal identifying information in your comment, you should be aware that the entire comment, including your personal identifying information, may be made available at any time. While you can ask us in your comment to withhold your personal identifying information from public review, we cannot guarantee that we will be able to do so.

Authority

We provide this notice under section 10(c) of the ESA (16 U.S.C. 1531 *et seq.*) and its implementing regulations (50 CFR 17.22), and NEPA (42 U.S.C. 4371 *et seq.*) and its implementing regulations (40 CFR 1506.6; 43 CFR part 46).

Dated: March 4, 2013.

Lynn Lewis,

Assistant Regional Director, Ecological Services, Midwest Region.

[FR Doc. 2013–05524 Filed 3–8–13; 8:45 am]

BILLING CODE 4310–55–P

INTERNATIONAL TRADE COMMISSION

[Investigation Nos. 701–TA–350 and 731–TA–616 and 618 (Third Review)]

Determinations: Corrosion-Resistant Carbon Steel Flat Products From Germany and Korea

On the basis of the record [1] developed in the subject five-year reviews, the United States International Trade Commission (Commission) determines, pursuant to section 751(c) of the Tariff Act of 1930 (19 U.S.C. 1675(c)), that revocation of the countervailing duty order on corrosion-resistant carbon steel flat products from Korea and the antidumping duty orders on corrosion-resistant carbon steel flat products from Germany and Korea would not be likely to lead to continuation or recurrence of material injury to an industry in the United States within a reasonably foreseeable time.

Background

The Commission instituted these reviews on January 3, 2012 (77 FR 301, January 4, 2012) and determined on April 9, 2012 that it would conduct full reviews (77 FR 24221, April 23, 2012). Notice of the scheduling of the Commission's reviews and of a public hearing to be held in connection therewith was given by posting copies of the notice in the Office of the Secretary, U.S. International Trade Commission, Washington, DC, and by publishing the notice in the **Federal Register** on May 30, 2012 (77 FR 31877) (schedule revised effective November 2, 2012 (77 FR 67395, November 9, 2012)). The hearing was held in Washington, DC, on January 9, 2013, and all persons who requested the opportunity were permitted to appear in person or by counsel.

The Commission transmitted its determinations in these reviews to the Secretary of Commerce on March 5, 2013. The views of the Commission are contained in USITC Publication 4388 (March 2013), entitled *Corrosion-Resistant Carbon Steel Flat Products from Germany and Korea: Investigation Nos. 701–TA–350 and 731–TA–616 and 618 (Third Review).*

Issued: March 5, 2013.

By order of the Commission.

Lisa R. Barton,

Acting Secretary to the Commission.

[FR Doc. 2013–05536 Filed 3–8–13; 8:45 am]

BILLING CODE 7020–02–P

[1] The record is defined in sec. 207.2(f) of the Commission's Rules of Practice and Procedure (19 CFR 207.2(f)).

DEPARTMENT OF JUSTICE

Notice of Lodging of Proposed Consent Decree Amendment Under the Clean Air Act; the Clean Water Act; the Resource Conservation and Recovery Act; the Emergency Planning and Community Right-To-Know Act; and the Comprehensive Environmental Response, Compensation and Liability Act

On March 4, 2013, the Department of Justice lodged with the United States District Court for the Eastern District of Missouri a proposed First Amendment to the Consent Decree in the lawsuit entitled *United States* v. *The Doe Run Resources Corporation, et al.,* Civil Action No. 4:10-cv-1895–JCH.

The Consent Decree, entered by the Court on December 21, 2011 (Dkt. Item No. 116), resolved a joint multimedia action by the United States and the State of Missouri against The Doe Run Resources Corporation, The Doe Run Resources Corporation d/b/a The Doe Run Company, and The Buick Resource Recycling Facility, LLC, (collectively ''Doe Run'') for violations of the Clean Air Act, the Resource Conservation and Recovery Act, the Clean Water Act, the Emergency Planning and Community Right-to-Know Act, the Comprehensive Environmental Response, Compensation, and Liability Act, and Missouri law at several mining, milling and smelting operations located in Missouri. The Consent Decree required Doe Run to perform injunctive relief and mitigation projects and to pay a $7 million civil penalty. The Consent Decree also required Doe Run to cease certain operations at the Herculaneum Lead Smelter Facility by December 31, 2013. In the interim, the Consent Decree imposed certain limits on the smelter's operation. The proposed Amendment would temporarily increase the Herculaneum Lead Smelter Facility 12-month rolling average limit for SO_2 emissions and the 12-month rolling average limit for lead production for three months in 2013. To offset this temporary increase, the proposed Amendment requires Doe Run to lower the 12-month rolling SO_2 emission limit for five months in 2013 to ensure an overall net reduction in SO_2 emissions for 2013. The Amendment does not allow Doe Run to produce more lead at the Herculaneum Lead Smelter Facility for calendar year 2013 than it otherwise would under the original Consent Decree. In addition, the Amendment does not change the short-term lead production limit or the short-term SO_2 emission limits for the Herculaneum Lead Smelter Facility set forth in the Consent Decree.

The publication of this notice opens a period for public comment on the First Amendment to the Consent Decree. Comments should be addressed to the Assistant Attorney General, Environment and Natural Resources Division, and should refer to *United States* v. *The Doe Run Resources Corporation, et al.,* Civil Action No. 4:10–cv–1895, D.J. Ref. No. 90–5–2–1–07390/1. All comments must be submitted no later than fifteen (15) days after the publication date of this notice. Comments may be submitted either by email or by mail:

To submit comments:	*Send them to:*
By email ...	*pubcomment-ees.enrd@usdoj.gov.*
By mail	Assistant Attorney General, U.S. DOJ—ENRD, P.O. Box 7611, Washington, DC 20044–7611.

During the public comment period, the First Amendment to the Consent Decree may be examined and downloaded at this Justice Department Web site: *http://www.usdoj.gov/enrd/Consent_Decrees.html.* We will provide

a paper copy of the First Amendment to the Consent Decree upon written request and payment of reproduction costs. Please mail your request and payment to: Consent Decree Library, U.S. DOJ—ENRD, P.O. Box 7611, Washington, DC 20044–7611.

Please enclose a check or money order for $3.25 (25 cents per page reproduction cost) payable to the United States Treasury.

Robert M. Maher, Jr.,

Acting Deputy Section Chief, Environmental Enforcement Section, Environment and Natural Resources Division.

[FR Doc. 2013–05506 Filed 3–8–13; 8:45 am]

BILLING CODE 4410–15–P

DEPARTMENT OF JUSTICE

Foreign Claims Settlement Commission

Completion of Claims Adjudication Program

AGENCY: Foreign Claims Settlement Commission of the United States, DOJ.

ACTION: Notice.

SUMMARY: This notice announces the completion date of the claims adjudication programs referred to the Foreign Claims Settlement Commission (''Commission'') by the Department of State by letters dated December 11, 2008 (the ''Libya I program''), and January 15, 2009 (the ''Libya II program''), involving claims of United States nationals against the Government of Libya that were settled under the ''Claims Settlement Agreement Between the United States of America and the Great Socialist People's Libyan Arab Jamahiriya.'' By prior notice, the Commission announced the commencement of the Libya I program on March 23, 2009, with a completion date of March 23, 2010 (74 FR 12148), and announced the commencement of the Libya II program on July 7, 2009, with a completion date of July 7, 2011 (74 FR 32193). The completion date specified in this Notice supersedes the previously announced completion dates.

DATES: The completion date of the Libya I program and the Libya II program is May 21, 2013. A petition to reopen a claim filed under these programs must be filed not later than March 21, 2013 (60 days before the completion date). 45 CFR 509.5(l).

FOR FURTHER INFORMATION CONTACT: Brian M. Simkin, Chief Counsel, Foreign Claims Settlement Commission of the United States, 600 E Street NW., Room 6002, Washington, DC 20579, Tel. (202) 616–6975, FAX (202) 616–6993.

Notice of Completion of Claims Adjudication Program

Pursuant to the authority conferred upon the Secretary of State and the Commission under subsection 4(a)(1)(C) of Title I of the International Claims Settlement Act of 1949 (Pub. L. 455, 81st Cong., approved March 10, 1950, as amended by Public Law 105–277, approved October 21, 1998 (22 U.S.C. 1623(a)(1)(C))), the Foreign Claims Settlement Commission hereby gives notice that on May 21, 2013, the Commission will complete the claims adjudication programs referred to the Commission by the Department of State by letters dated December 11, 2008 (the ''Libya I program''), and January 15, 2009 (the ''Libya II program''), involving claims of United States nationals against the Government of Libya that were settled under the ''Claims Settlement Agreement Between the United States of America and the Great Socialist People's Libyan Arab Jamahiriya.''

Jeremy R. LaFrancois,

Chief Administrative Counsel.

[FR Doc. 2013–05534 Filed 3–8–13; 8:45 am]

BILLING CODE 4410–01–P

DEPARTMENT OF LABOR

Office of the Secretary

Agency Information Collection Activities; Submission for OMB Review; Comment Request; Requests To Approve Conformed Wage Classifications and Unconventional Fringe Benefit Plans Under the Davis-Bacon and Related Acts and Contract Work Hours and Safety Standards Act

ACTION: Notice.

SUMMARY: The Department of Labor (DOL) is submitting the Wage and Hour Division (WHD) sponsored information collection request (ICR) titled, ''Requests To Approve Conformed Wage Classifications and Unconventional Fringe Benefit Plans Under the Davis-Bacon and Related Acts and Contract Work Hours and Safety Standards Act,'' to the Office of Management and Budget (OMB) for review and approval for continued use in accordance with the Paperwork Reduction Act (PRA) of 1995, 44 U.S.C. 3501 et seq.

DATES: Submit comments on or before April 10, 2013.

ADDRESSES: A copy of this ICR with applicable supporting documentation; including a description of the likely respondents, proposed frequency of response, and estimated total burden may be obtained from the RegInfo.gov Web site, *http://www.reginfo.gov/public/do/PRAMain*, on the day following publication of this notice or by contacting Michel Smyth by telephone at 202–693–4129 (this is not a toll-free number) or sending an email to *DOL_PRA_PUBLIC@dol.gov.*

Submit comments about this request to the Office of Information and Regulatory Affairs, Attn: OMB Desk Officer for DOL–WHD, Office of Management and Budget, Room 10235, 725 17th Street NW., Washington, DC 20503, Fax: 202–395–6881 (this is not a toll-free number), email: *OIRA_submission@omb.eop.gov.*

FOR FURTHER INFORMATION CONTACT: Contact Michel Smyth by telephone at 202–693–4129 (this is not a toll-free number) or by email at *DOL_PRA_PUBLIC@dol.gov.*

Authority: 44 U.S.C. 3507(a)(1)(D).

SUPPLEMENTARY INFORMATION: Regulations 29 CFR part 5 prescribe labor standards for Federally financed and assisted construction contracts subject to the Davis-Bacon Act (DBA), 40 U.S.C. 3141 et seq.; the Davis-Bacon Related Acts (DBRA); and the Contract Work Hours and Safety Standards Act (CWHSSA), 40 U.S.C. 3701 et seq. The DBA and DBRA require payment of locally prevailing wages and fringe benefits, as determined by the DOL, to laborers and mechanics on most Federally financed or assisted construction projects. 40 U.S.C. 3142(a)–(b) and 29 CFR 5.5(a)(1). The CWHSSA requires the payment of one and one-half times the basic rate of pay for hours worked over forty in a week on most Federal contracts involving the employment of laborers or mechanics. See 40 U.S.C. 3702(a) and 29 CFR 5.5(b)(1). The requirements of this information collection consist of: (A) Reports of conformed classifications and wage rates and (B) requests for approval of unconventional fringe benefit plans.

This information collection is subject to the PRA. A Federal agency generally cannot conduct or sponsor a collection of information, and the public is generally not required to respond to an information collection, unless it is approved by the OMB under the PRA and displays a currently valid OMB Control Number. In addition, notwithstanding any other provisions of law, no person shall generally be subject to penalty for failing to comply with a collection of information that does not display a valid Control Number. *See* 5 CFR 1320.5(a) and 1320.6. The DOL obtains OMB approval for this information collection under Control Number 1235–0023. The current approval is scheduled to expire on April

30, 2013; however, it should be noted that existing information collection requirements submitted to the OMB receive a month-to-month extension while they undergo review. For additional information, see the related notice published in the **Federal Register** on November 8, 2012 (77 FR 67026).

Interested parties are encouraged to send comments to the OMB, Office of Information and Regulatory Affairs at the address shown in the **ADDRESSES** section within 30 days of publication of this notice in the **Federal Register**. In order to help ensure appropriate consideration, comments should mention OMB Control Number 1235–0023. The OMB is particularly interested in comments that:

- Evaluate whether the proposed collection of information is necessary for the proper performance of the functions of the agency, including whether the information will have practical utility;
- Evaluate the accuracy of the agency's estimate of the burden of the proposed collection of information, including the validity of the methodology and assumptions used;
- Enhance the quality, utility, and clarity of the information to be collected; and
- Minimize the burden of the collection of information on those who are to respond, including through the use of appropriate automated, electronic, mechanical, or other technological collection techniques or other forms of information technology, e.g., permitting electronic submission of responses.

Agency: DOL–WHD.

Title of Collection: Requests to Approve Conformed Wage Classifications and Unconventional Fringe Benefit Plans Under the Davis-Bacon and Related Acts and Contract Work Hours and Safety Standards Act.

OMB Control Number: 1235–0027.

Affected Public: Federal Government and Private Sector—businesses or other for-profits.

Total Estimated Number of Respondents: 8,503.

Total Estimated Number of Responses: 8,503.

Total Estimated Annual Burden Hours: 2,128.

Total Estimated Annual Other Costs Burden: $3,996.

Dated: March 5, 2013.

Michel Smyth,

Departmental Clearance Officer.

[FR Doc. 2013–05559 Filed 3–8–13; 8:45 am]

BILLING CODE 4510–27–P

NATIONAL AERONAUTICS AND SPACE ADMINISTRATION

[Notice: (13–022)]

NASA Advisory Council; Science Committee; Planetary Science Subcommittee; Meeting

AGENCY: National Aeronautics and Space Administration.

ACTION: Notice of meeting.

SUMMARY: In accordance with the Federal Advisory Committee Act, Public Law 92–463, as amended, the National Aeronautics and Space Administration (NASA) announces a meeting of the Planetary Science Subcommittee of the NASA Advisory Council (NAC). This Subcommittee reports to the Science Committee of the NAC. The meeting will be held for the purpose of soliciting, from the scientific community and other persons, scientific and technical information relevant to program planning.

DATES: Thursday, April 4, 2013, 8:30 a.m. to 5:30 p.m., and Friday, April 5, 2013, 8:30 a.m. to noon, Local Time.

ADDRESSES: This meeting will take place at NASA Headquarters, 300 E Street SW., Rooms 6H45 and 3H46, respectively, Washington, DC 20546.

FOR FURTHER INFORMATION CONTACT: Ms. Marian Norris, Science Mission Directorate, NASA Headquarters, Washington, DC 20546, (202) 358–4452, fax (202) 358–3094, or *mnorris@nasa.gov*.

SUPPLEMENTARY INFORMATION: The meeting will be open to the public up to the capacity of the room. The meeting will also be available telephonically and by WebEx. Any interested person may call the USA toll free conference call number 888–324–7514, pass code PSS, to participate in this meeting by telephone. The WebEx link is *https://nasa.webex.com/*, the meeting number on April 4 is 990 378 664, password PSS@Apr4; the meeting number on April 5 is 996 281 450, password PSS@Apr5. The agenda for the meeting includes the following topics:

—Planetary Science Division Update
—Mars Exploration Program Update
—Mars Science Laboratory/Curiosity Update
—Research and Analysis Update
—Reports from Assessment Groups

It is imperative that the meeting be held on these dates to accommodate the scheduling priorities of the key participants. Attendees will be requested to sign a register and to comply with NASA security requirements, including the presentation of a valid picture ID to Security before access to NASA Headquarters. Foreign nationals attending this meeting will be required to provide a copy of their passport and visa in addition to providing the following information no less than 10 working days prior to the meeting: Full name; gender; date/place of birth; citizenship; visa information (number, type, expiration date); passport information (number, country, expiration date); employer/affiliation information (name of institution, address, country, telephone); title/position of attendee; and home address to Marian Norris via email at *mnorris@nasa.gov* or by fax at (202) 358–3094. U.S. citizens and Permanent Residents (green card) holders are requested to submit their name and affiliation 3 working days prior to the meeting to Marian Norris.

Susan M. Burch,

Acting Advisory Committee Management Officer, National Aeronautics and Space Administration.

[FR Doc. 2013–05486 Filed 3–8–13; 8:45 am]

BILLING CODE 7510–13–P

NATIONAL CREDIT UNION ADMINISTRATION

Agency Information Collection Activities: Submission to OMB for Revision to a Currently Approved Information Collection; Comment Request

AGENCY: National Credit Union Administration (NCUA).

ACTION: Request for comment.

SUMMARY: The NCUA intends to submit the following information collection to the Office of Management and Budget (OMB) for review and clearance under the Paperwork Reduction Act of 1995 (Pub. L. 104–13, 44 U.S.C. Chapter 35). This information collection is published to obtain comments from the public.

DATES: Comments will be accepted until April 10, 2013.

ADDRESSES: Interested parties are invited to submit written comments to the NCUA Contact and the OMB Reviewer listed below:

NCUA Contact: Tracy Crews, National Credit Union Administration, 1775 Duke Street, Alexandria, Virginia 22314–3428, Fax No. 703–837–2861, Email: *OCIOMail@ncua.gov.*

OMB Contact: Office of Management and Budget, ATTN: Desk Officer for the National Credit Union Administration, Office of Information and Regulatory Affairs, Washington, DC 20503.

FOR FURTHER INFORMATION CONTACT: Requests for additional information, a copy of the information collection request, or a copy of submitted comments should be directed to Tracy Crews at the National Credit Union Administration, 1775 Duke Street, Alexandria, VA 22314–3428, or at (703) 518–6444.

SUPPLEMENTARY INFORMATION:

I. Abstract and Request for Comments

NCUA is renewing the currently approved collection for 3133–0185. The collection includes the NCUA Vendor Registration Form (NCUA 1772) and instructions for completing the form. Section 342 of the Dodd-Frank Wall Street Reform and Consumer Protection Act (The ''Dodd-Frank Act'') calls for NCUA (the ''Agency'') to promote the inclusion of minority-owned and women-owned firms in the Agency's business activities. The Dodd-Frank Act also requires NCUA to annually report to Congress the total amounts paid to minority- and women-owned businesses. In order to comply with this Congressional mandate, NCUA needs to collect certain information from its current and potential vendors, so that it can identify businesses that meet the criteria that must be reported to Congress. Without the use of the vendor registration form, NCUA would not be able to capture the type of information that Congress is requiring under the Dodd-Frank Act. The section within the Dodd-Frank Act that makes it necessary to collect this information is as follows: Section 342(e)(2) Reports—Each office shall submit to Congress an annual report regarding the actions taken by the agency and the Office pursuant to this section, which shall include—the percentage of the amounts described in paragraph (1) that were paid to contractors described in subsection (c)(1) [minority-owned and women-owned businesses]. The vendor information is to be submitted to the agency on a one-time basis through a one-page vendor form. The one-page form is brief and asks for simple, readily available information. Additionally, NCUA plans to make this registration available electronically in a format that allows vendors to complete and submit online, without requiring any printing, manual entries, or faxing. The information provided will be used to assign an ownership status to the vendor (i.e., minority-owned business, woman-owned business) per the requirements of the Act. Once an ownership status is assigned to each vendor, NCUA will be able to calculate the total amounts of contracting dollars paid to minority-owned and women-owned businesses. There is no change in burden hours or cost from NCUA's last submission.

The NCUA requests that you send your comments on this collection to the location listed in the addresses section. Your comments should address: (a) The necessity of the information collection for the proper performance of NCUA, including whether the information will have practical utility; (b) the accuracy of our estimate of the burden (hours and cost) of the collection of information, including the validity of the methodology and assumptions used; (c) ways we could enhance the quality, utility, and clarity of the information to be collected; and (d) ways we could minimize the burden of the collection of the information on the respondents such as through the use of automated collection techniques or other forms of information technology. It is NCUA's policy to make all comments available to the public for review. Comments submitted in response to this notice will be summarized and/or included in the request for OMB approval. All comments will become a matter of public record.

II. Data

Proposal for the following collection of information:

OMB Number: 3133–0185.

Form Number: NCUA 1772.

Type of Review: Revision to the currently approved collection.

Title: NCUA Vendor Registration Form.

Description: Current and potential vendors complete a one-page registration form. The form asks for basic information from vendors interested in doing business with the agency. This information allows NCUA to provide Congress with required reports on contracts with minority-owned and women-owned firms.

Respondents: Current and potential vendors.

Estimated Number of Respondents/Recordkeepers: 1000.

Estimated Burden Hours per Response: 10 minutes.

Frequency of Response: Once.

Estimated Total Annual Burden Hours: 167 hours.

Estimated Total Annual Cost: $3,500.

By the National Credit Union Administration Board on March 5, 2013.

Mary Rupp,

Secretary of the Board.

[FR Doc. 2013–05555 Filed 3–8–13; 8:45 am]

BILLING CODE 7535–01–P

NATIONAL CREDIT UNION ADMINISTRATION

Agency Information Collection Activities; Submission to OMB for a New Collection; Comment Request

AGENCY: National Credit Union Administration (NCUA).

ACTION: Request for comment.

SUMMARY: The NCUA intends to submit the following information collection to the Office of Management and Budget (OMB) for review and clearance under the Paperwork Reduction Act of 1995 (Pub. L. 104–13, 44 U.S.C. Chapter 35). This information collection notice is published to obtain comments from the public. The NCUA is proposing a new information collection related to its solicitation of proposals for outside legal counsel (outside counsel) to assist and advise the NCUA in its various capacities. The information will assist the NCUA in further: (i) Standardizing the data it uses to select outside counsel; (ii) considering additional criteria in making its selections; and (iii) improving efficiency and recordkeeping related to its selection process.

DATES: Comments will be accepted until May 10, 2013.

ADDRESSES: Interested parties are invited to submit written comments to the NCUA Contact and the OMB Reviewer listed below:

NCUA Contact: Tracy Crews, National Credit Union Administration, 1775 Duke Street, Alexandria, Virginia 22314–3428, Fax No. 703–837–2861, Email: *OCIOMail@ncua.gov*.

OMB Contact: Office of Management and Budget, ATTN: Desk Officer for the National Credit Union Administration, Office of Information and Regulatory Affairs, Washington, DC 20503.

FOR FURTHER INFORMATION CONTACT: Requests for additional information, a copy of the information collection request, or a copy of submitted comments should be directed to Tracy Crews at the National Credit Union Administration, 1775 Duke Street, Alexandria, VA 22314–3428, or at (703) 518–6444.

SUPPLEMENTARY INFORMATION:

I. Abstract and Request for Comments

The NCUA has developed two forms for collecting information from prospective outside counsel. One form relates to a budget or estimate of the legal fees, costs, and expenses that outside counsel would expect to invoice with respect to a particular legal matter. The other form includes representations

and certifications, covering matters such as firm profile and expertise, malpractice insurance, price determination and contract solicitation methods, equal opportunity, lobbying, invoices, and conflicts of interest. The information will enable the NCUA to further standardize the data it uses to select outside counsel, consider additional criteria in making its selections, and improve efficiency and recordkeeping related to its selection process.

In connection with seeking proposals from outside counsel, the NCUA's collections of information, in any of its capacities, are not subject to the Paperwork Reduction Act.[1] Nevertheless, the NCUA intends to voluntarily comply with the Paperwork Reduction Act in collecting this information.

The NCUA's estimates of the average number of respondents, burden, and total annual cost appear below. The estimated number of respondents is the NCUA's approximation of the average number of requests for proposals or inquiries for legal services it processes in any given calendar year. The estimated burden is the NCUA's assessment of the aggregate time prospective outside counsel will need to respond to the information on both the budget form and the representations and certifications form. The NCUA estimated the total annual cost by multiplying its estimate of the number of respondents (100) by the burden (2 hours) and multiplying that total by an estimated national average hourly billing rate for attorneys of $284.

The NCUA requests that you send your comments on this collection to the location listed in the addresses section. Your comments should address the following subjects: (a) The necessity of the information collection for the proper performance of the NCUA, including whether the information will have practical utility; (b) the accuracy of the NCUA's estimate of the burden (hours and cost) of the collection of information, including the validity of the methodology and assumptions used; (c) ways the NCUA could enhance the quality, utility, and clarity of the information to be collected; and (d) ways the NCUA could minimize the burden of the collection of the information on the respondents, such as through the use of automated collection techniques or other forms of information technology. It is the NCUA's policy to make all comments available to the public for review.

II. Data

Proposal for the following new collection of information:

OMB Number: 3133—New.

Form Number: N/A.

Type of Review: New collection.

Title: Contractor Budget, Representations, and Certifications.

Description: Standardized information from prospective outside counsel is essential to the NCUA in carrying out its responsibility as regulator, conservator, and liquidating agent for federally insured credit unions.

Respondents: Prospective outside legal counsel.

Estimated Number of Respondents/Recordkeepers: 100.

Estimated Burden Hours per Response: 2 hours.

Frequency of Response: Periodically, in response to solicitations.

Estimated Total Annual Burden Hours: 200.

Estimated Total Annual Cost: $56,800.

By the National Credit Union Administration Board on February 26, 2013.

Mary Rupp,

Secretary of the Board.

[FR Doc. 2013–05558 Filed 3–8–13; 8:45 am]

BILLING CODE 7535–01–P

[1] *See* 12 U.S.C. 1766(i)(2) (''In addition to the authority conferred upon it by other sections of this chapter, the [NCUA] Board is authorized in carrying out its functions under this chapter * * * to expend such funds, enter into such contracts with public and private organizations and persons, make such payments in advance or by way of reimbursement, acquire and dispose of, by lease or purchase, real or personal property, *without regard to the provisions of any other law applicable to executive or independent agencies of the United States,* and perform such other functions or acts as it may deem necessary or appropriate to carry out the provisions of this chapter, in accordance with the rules and regulations or policies established by the Board not inconsistent with this chapter * * *.) (emphasis added); *see also* 12 U.S.C. 1787(b)(2)(A) (providing that when the NCUA Board acts as conservator or liquidating agent, by operation of law, it succeeds to the legally distinct rights, titles and powers of relevant credit unions, which are not subject to the Paperwork Reduction Act).

NATIONAL CREDIT UNION ADMINISTRATION

Agency Information Collection Activities; Submission to OMB for Revision to a Currently Approved Collection; Comment Request

AGENCY: National Credit Union Administration (NCUA).

ACTION: Request for comment.

SUMMARY: The NCUA intends to submit the following information collection to the Office of Management and Budget (OMB) for review and clearance under the Paperwork Reduction Act of 1995 (Pub. L. 104–13, 44 U.S.C. Chapter 35). This information collection is published to obtain comments from the public. NCUA is proposing to streamline the Community Development Revolving Loan Fund (CDRLF)—Loan Program collection to include the CDRLF Technical Assistance (Grant) Program. Both the CDRLF—Loan Program and the CDRLF—Technical Assistance (Grant) Program are administered under the NCUA Rules and Regulations Section 705. 12 CFR 705. This request seeks to merge elements of both the loan and grant programs into the same collection and application in order to increase program accessibility and internal and external efficiencies. The newly combined application will soon be available on-line and low-income designated credit unions will be able to apply for either a CDRLF loan or grant by accessing the same on-line application system.

DATES: Comments will be accepted until May 10, 2013.

ADDRESSES: Interested parties are invited to submit written comments to the NCUA Contact and the OMB Reviewer listed below:

NCUA Contact: Tracy Crews, National Credit Union Administration, 1775 Duke Street, Alexandria, Virginia 22314–3428, Fax No. 703–837–2861, Email: *OCIOmail@ncua.gov.*

OMB Contact: Office of Management and Budget, ATTN: Desk Officer for the National Credit Union Administration, Office of Information and Regulatory Affairs, Washington, DC 20503.

FOR FURTHER INFORMATION CONTACT: Requests for additional information, a copy of the information collection request, or a copy of submitted comments should be directed to Tracy Crews at the National Credit Union Administration, 1775 Duke Street, Alexandria, VA 22314–3428, or at (703) 518–6444.

SUPPLEMENTARY INFORMATION:

I. Abstract and Request for Comments

NCUA is amending the currently approved collection for 3133–0138. The CDRLF Loan and Technical Assistance (Grant) Programs are both administered under the NCUA Rules and Regulations Section 705. 12 CFR 705. Previously, two specific forms were used, one application for loans and one application for grants. NCUA is seeking to streamline the CDRLF Program application to include both the loan and the grant section into one interactive, on-line application in order to recognize internal and external efficiencies. With the merger of the grant documents to this collection, the burden will increase

by 1,276 hours to include the additional calculations from low-income designated credit unions seeking grants. This increase is due strictly to the merger of grant application documents. The burden hours and cost related to the loan documents have not changed from the previous submission.

The NCUA requests that you send your comments on this collection to the locations listed in the addresses section. Your comments should address: (a) The necessity of the information collection for the proper performance of the CDRLF Loan and Technical Assistance (Grant) Programs, including whether the information will have practical utility; (b) the accuracy of our estimate of the burden (hours and cost) of the collection of information, including the validity of the methodology and assumptions used; (c) ways we could enhance the quality, utility, and clarity of the information to be collected; and (d) ways we could minimize the burden of the collection of information on the respondents such as through the use of automated collection techniques or other forms of information technology. It is NCUA's policy to make all comments available to the public for review. Comments submitted in response to this notice will be summarized and/or included in the request for OMB approval. All comments will become a matter of public record.

II. Data

Proposal for the following collection of information:

OMB Number: 3133–0138.

Type of Review: Revision, with change, of a currently approved collection.

Title: Community Development Revolving Loan Fund (CDRLF) Program.

Description: NCUA requests this information from participants in the Community Development Revolving Loan Fund (CDRLF) Loan and Technical Assistance (Grant) Programs. The information will allow NCUA to assess a credit union's capacity to repay the funds and ensure that the funds were used as intended to benefit the institution and community it serves.

Estimated Number of Respondents/ Recordkeepers: 343.

Estimated Burden Hours per Response: 4, 8, or 16 per response, dependent on application type.

Frequency of Response: Reporting, on occasion and semi-annually.

Estimated Total Annual Burden Hours: 2,259 hours.

Estimated Total Annual Cost: 0.

By the National Credit Union Administration Board on February 26, 2013.

Mary Rupp,

Secretary of the Board.

[FR Doc. 2013–05552 Filed 3–8–13; 8:45 am]

BILLING CODE 7535–01–P

NATIONAL CREDIT UNION ADMINISTRATION

Agency Information Collection Activities; Submission to OMB for Reinstatement of a Previously Approved Collection; Comment Request

AGENCY: National Credit Union Administration (NCUA).

ACTION: Request for comment.

SUMMARY: The NCUA intends to submit the following information collection to the Office of Management and Budget (OMB) for review and clearance under the Paperwork Reduction Act of 1995 (Public Law 104–13, 44 U.S.C. Chapter 35). This information collection is published to obtain comments from the public.

DATES: Comments will be accepted until April 10, 2013.

ADDRESSES: Interested parties are invited to submit written comments to the NCUA Contact and the OMB Reviewer listed below:

NCUA Contact: Tracy Crews, National Credit Union Administration, 1775 Duke Street, Alexandria, Virginia 22314–3428, Fax No. 703–837–2861, Email: *OCIOMail@ncua.gov.*

OMB Contact: Office of Management and Budget, ATTN: Desk Officer for the National Credit Union Administration, Office of Information and Regulatory Affairs, Washington, DC 20503.

FOR FURTHER INFORMATION CONTACT: Requests for additional information, a copy of the information collection request, or a copy of submitted comments should be directed to Tracy Crews at the National Credit Union Administration, 1775 Duke Street, Alexandria, VA 22314–3428, or at (703) 518–6444.

SUPPLEMENTARY INFORMATION:

I. Abstract and Request for Comments

NCUA is reinstating a previously approved collection for 3133–0133. This collection is in connection with NCUA's investment regulation found at 12 CFR part 703. A previous 60-day notice on this information collection requirement was published in the **Federal Register** inviting public comment on October 14, 2011 (76 FR 63955). No comments on the previous notice were received. Since the issuance of the last notice, however, the number of potential respondents has decreased and the number of burden hours per respondent has slightly increased.

Federal credit unions are required under Part 703 to establish written investment policies and review them annually, document details of the individual investments monthly, ensure adequate broker/dealer selection criteria, and record credit decisions regarding deposits in financial institutions. There are approximately 4,534 federal credit unions that may be subject to all, or parts of the paperwork burden contained in Part 703.

Generally, there is a disparity in the burden of Part 703 for credit unions of different sizes due to their different investment needs. Very small credit unions generally have simple investment portfolios for which parts of the rule do not apply. Larger credit unions with complex investment portfolios need to address many areas of the rule.

Depending on these and other factors, the categories of burden for federal credit unions complying with Part 703 may include the following:

a. Establishing a written investment policy;

b. Performing an annual review of the written investment policy;

c. Obtaining and reviewing reports from outside investment advisors;

d. Preparing a written report of investments;

e. Obtaining price quotes on securities prior to purchase or sale;

f. Completing and documenting a monthly review of the fair value of each security;

g. Completing a credit analysis of the issuing entity;

h. Obtaining individual confirmation statements for each investment purchased or sold;

i. Obtaining and reconciling a monthly statement of investments held in safekeeping;

j. Preparing a monthly written report of the fair value and/or total return of all trading securities and purchase and sale transactions and the resulting gain or loss on an individual basis;

k. Obtaining and annually analyzing background information on broker/ dealers used;

l. Requesting participation in the investment pilot program; and

m. Obtaining written custodial agreement for safekeeping activities by third parties.

The NCUA requests that you send your comments on this collection for Part 703 to the locations listed in the addresses section. Your comments should address: (a) The necessity of the

information collection for the proper performance of NCUA, including whether the information will have practical utility; (b) the accuracy of our estimate of the burden (hours and cost) of the collection of information, including the validity of the methodology and assumptions used; (c) ways we could enhance the quality, utility, and clarity of the information to be collected; and (d) ways we could minimize the burden of the collection of the information on the respondents such as through the use of automated collection techniques or other forms of information technology. It is NCUA's policy to make all comments available to the public for review.

II. Data

Proposal for the following collection of information:

OMB Number: 3133–0133.

Form Number: None.

Type of Review: Reinstatement of previously approved collection.

Title: 12 CFR Part 703, Investment and Deposit Activities.

Description: To ensure that federal credit unions make safe and sound investments, the rule requires that they establish written investment policies and review them annually, document details of the individual investments monthly, ensure adequate broker/dealer selection criteria, and record credit decisions regarding deposits in certain financial institutions.

Respondents: Federal Credit Unions (here abbreviated as FCUs).

Estimated Number of Respondents/Recordkeepers: 4,534.

Estimated Burden Hours per Response: Approximately 50 hours.

Frequency of Response: Recordkeeping; Reporting; On Occasion; Quarterly.

Estimated Total Annual Burden Hours: 225,683 hours, determined as follows:

a. Establish a written investment policy.

Establishing a written investment policy by a financial institution is a usual and customary business practice, therefore, no new or additional burden is added with this requirement.

b. Perform an annual review of the written investment policy.

Number of respondents—4,534
Frequency of Response—annually (1 time per year)
Annual Hour Burden—2.5 hours (estimated between 15 minutes and 4 hours for this review)
$(4{,}534 \times 1) \times 2.5 = 11{,}335$ hours

c. Obtain and review reports from outside investment advisors.

Number of respondents—720
Frequency of Response—monthly (12 times per year)
Annual Hour Burden—2 hours
$(720 \times 12) \times 2 = 17{,}280$ hours

d. Prepare a written report of investments.

Number of respondents—4,534
Frequency of Response—monthly (12 times per year)
Annual Hour Burden—2 hours (estimated between 1 and 3 hours)
$(4{,}534 \times 12) \times 2 = 108{,}816$ hours

e. Obtain price quotes on securities prior to purchase or sale.

Number of respondents—2,742 (not all FCUs invest in securities)
Frequency of Response—20 (an average of 20 purchases or sales per year)
Annual Hour Burden—12 minutes each (or 0.2 of an hour)
$(2{,}742 \times 20) \times .2 = 10{,}968$ hours

f. Complete and document a monthly review of the fair value of each security.

Number of respondents—2,742
Frequency of Response—monthly (12 times per year)
Annual Hour Burden—1.5 hours (estimated between 10 minutes and 2 hours)
$(2{,}742 \times 12) \times 1.5 = 49{,}356$ hours

g. Complete a credit analysis of the issuing entity.

Number of respondents—618
Frequency of Response—annually (1 time per year) times 3 per FCU
Annual Hour Burden—10 hours
$((618 \times 1) \times 3) \times 10 = 18{,}540$ hours

h. Obtain individual confirmation statements for each investment purchased or sold.

Obtaining individual confirmation statements for each investment purchased or sold by a financial institution is a usual and customary business practice of FCUs and broker/dealers; therefore, no new or additional burden is added with this requirement.

i. Obtain and reconcile a monthly statement of investments held in safekeeping.

Obtaining and reconciling a monthly statement of investments held in safekeeping by a financial institution is a usual and customary business practice, therefore, no new or additional burden is added with this requirement.

j. Prepare a monthly written report of the fair value and/or total return of all trading securities and purchase and sale transactions and the resulting gain or loss on an individual basis.

Number of respondents—74
Frequency of Response—monthly (12 times per year)
Annual Hour Burden—1 hour
$(74 \times 12) \times 1 = 888$ hours

k. Obtain and annually analyze background information on broker/dealers used.

Number of respondents—3,500
Frequency of Response—annually (1 time per year)
Annual Hour Burden—2 hours
$(3{,}500 \times 1) \times 2 = 7{,}000$ hours

l. Request participation in the investment pilot program.

Number of respondents—1
Frequency of Response—1 (on occasion)
Annual Hour Burden—100 hours
$(1 \times 1) \times 100 = 100$ hours

m. Obtain written custodial agreement for safekeeping activities by third parties.

Number of respondents—3,500
Frequency of Response—1 time per year
Annual Hour Burden—15 minutes
$(3{,}500 \times 1) \times .4 = 1{,}400$ hours

Therefore, the estimated total burden is 225,683 hours.

Estimated Total Annual Cost: The cost is measured in hours.

By the National Credit Union Administration Board on March 5, 2013.

Mary Rupp,

Secretary of the Board.

[FR Doc. 2013–05557 Filed 3–8–13; 8:45 am]

BILLING CODE 7535–01–P

NATIONAL CREDIT UNION ADMINISTRATION

Agency Information Collection Activities: Submission to OMB for Revision to a Currently Approved Information Collection; Comment Request

AGENCY: National Credit Union Administration (NCUA).

ACTION: Request for comment.

SUMMARY: The NCUA intends to submit the following information collection to the Office of Management and Budget (OMB) for review and clearance under the Paperwork Reduction Act of 1995 (Pub. L. 104–13, 44 U.S.C. Chapter 35). This information collection is published to obtain comments from the public. NCUA is proposing a data collection change to the credit union Profile as well as the 5300 Call Report. NCUA is proposing to add fields to the General, Information Systems and Technology, Regulatory, Disaster Recovery, Member Services and Grant sections of the Profile. This data will assist NCUA in monitoring and supervising credit unions. On the 5300 Call Report, NCUA is proposing to add fields to the Miscellaneous Loan Information, Additional Share Information,

Miscellaneous, Delinquency, Loan Charge Off and Recoveries, Liquidity, Commitments and Sources, Purchased Credit Impaired Loans, and Supplemental Investment Information sections. The new data collection provides more detailed delinquent, charge off and recovery loan information. Additionally, these fields provide information for offsite monitoring of risks to the National Credit Union Share Insurance Fund.

DATES: Comments will be accepted until May 10, 2013.

ADDRESSES: Interested parties are invited to submit written comments to the NCUA Contact and the OMB Reviewer listed below:

NCUA Contact: Tracy Crews, National Credit Union Administration, 1775 Duke Street, Alexandria, Virginia 22314–3428, Fax No. 703–837–2861, Email: *OCIOMail@ncua.gov.*

OMB Contact: Office of Management and Budget, ATTN: Desk Officer for the National Credit Union Administration, Office of Information and Regulatory Affairs, Washington, DC 20503.

FOR FURTHER INFORMATION CONTACT: Requests for additional information, a copy of the information collection request, or a copy of submitted comments should be directed to Tracy Crews at the National Credit Union Administration, 1775 Duke Street, Alexandria, VA 22314–3428, or at (703) 518–6444.

SUPPLEMENTARY INFORMATION:

I. Abstract and Request for Comments

NCUA is amending the currently approved collection for 3133–0004. Two specific forms are used, NCUA Form 5300 and NCUA Profile Form 4501A, also known as the Call Report and Profile, respectively. Section 741.6 of the NCUA Rules and Regulations requires all federally insured credit unions to submit a Call Report quarterly. 12 CFR 741.6. The information enables the NCUA to monitor credit unions whose share accounts are insured by the National Credit Union Share Insurance Fund. NCUA uses the information collected from these Call Reports to fulfill its mission of supervising credit unions and the Federal Reserve Board uses it to monitor and control the nation's money supply and the system of financial institutions. Congress and various state legislatures use this information to monitor, regulate, and control credit unions and financial institutions. The changes made to the Profile and Call Report form for June 2013 will provide data to assist the National Credit Union Administration in assessing regulatory compliance and financial and operational risks. There is a decrease of 6,045 hours from the last submission (2012). The decrease is a result of an adjustment to the number of credit unions completing the Call Report from 7,093 to 6,864. This decline is from credit union mergers and liquidations.

The NCUA requests that you send your comments on this collection to the location listed in the addresses section. Your comments should address: (a) The necessity of the information collection for the proper performance of NCUA, including whether the information will have practical utility; (b) the accuracy of our estimate of the burden (hours and cost) of the collection of information, including the validity of the methodology and assumptions used; (c) ways we could enhance the quality, utility, and clarity of the information to be collected; and (d) ways we could minimize the burden of the collection of the information on the respondents such as through the use of automated collection techniques or other forms of information technology. It is NCUA's policy to make all comments available to the public for review.

II. Data

Proposal for the following collection of information:

OMB Number: 3133–0004.

Form Number: NCUA 5300.

Type of Review: Revision to the currently approved collection.

Title: Revisions to NCUA Call Reports.

Description: The financial and statistical information is essential to NCUA in carrying out its responsibility for the supervision of federally insured credit unions. The information also enables NCUA to monitor all federally insured credit unions whose share accounts are insured by the National Credit Union Share Insurance Fund (NCUSIF).

Respondents: All Credit Unions.

Estimated Number of Respondents/Recordkeepers: 6,864.

Estimated Burden Hours per Response: 6.6 hours.

Frequency of Response: Quarterly.

Estimated Total Annual Burden Hours: 181,210.

Estimated Total Annual Cost: $5,318,513.

By the National Credit Union Administration Board on February 28, 2013.

Mary Rupp,

Secretary of the Board.

[FR Doc. 2013–05553 Filed 3–8–13; 8:45 am]

BILLING CODE 7535–01–P

NUCLEAR REGULATORY COMMISSION

[Docket Nos. 70–7003 and 70–7004; NRC–2010–0355]

Approval of Direct Transfer of Licenses and Issuance of License Amendment To Effectuate Such Transfers for American Centrifuge Operating, LLC

AGENCY: Nuclear Regulatory Commission.

ACTION: Notice of approval of direct transfer of control and issuance of license amendments to effectuate such transfers.

SUMMARY: The U.S. Nuclear Regulatory Commission (NRC) is providing a notice of consent to the direct transfer of licenses and issuance of License Amendment 7 to Materials License No. SNM–7003 for the American Centrifuge Lead Cascade Facility (Lead Cascade), and Amendment 3 to Materials License No. SNM–2011 for the American Centrifuge Plant (ACP). This action authorized the direct transfer of these licenses from USEC Inc. (USEC) to American Centrifuge Operating, LLC (ACO).

FOR FURTHER INFORMATION CONTACT: Osiris Siurano-Perez, Project Manager, Office of Nuclear Material Safety and Safeguards, U.S. Nuclear Regulatory Commission, Washington, DC 20555; telephone: 301–492–3117; email: *Osiris.Siurano-Perez@nrc.gov.*

SUPPLEMENTARY INFORMATION: Pursuant to section 2.106(1) of Title 10 *Code of Federal Regulations* (10 CFR), the NRC is providing a notice of consent to the direct transfer of licenses and issuance of License Amendment 7 to Materials License No. SNM–7003 for Lead Cascade, and Amendment 3 to Materials License No. SNM–2011 for ACP. This action authorized the direct transfer of these licenses from USEC to ACO. The NRC's receipt of the request to take this licensing action was previously noticed in the **Federal Register** on November 17, 2010 (75 FR 70300), with a notice of an opportunity to request a hearing. No requests for a hearing were received. However, by letter dated December 5, 2010, the Ohio Sierra Club submitted a request for a public discussion of USEC's application. In response, on January 4, 2011, the NRC staff held a Category 2 public meeting in Piketon, Ohio, to discuss the NRC's process for reviewing USEC's request to transfer their material licenses for the Lead Cascade and the ACP from USEC to ACO. No decisions were made at this meeting.

By Order dated February 10, 2011, the NRC approved the proposed direct transfer subject to the following conditions:

(1) USEC will obtain NRC approval on the revised financial assurance instruments for decommissioning of the Lead Cascade facility;

(2) ACO, as stated in the request, will abide by all commitments and representations previously made by USEC with respect to the licenses; and

(3) USEC will provide to the NRC, a copy of the executed facilities subleasing agreement(s) naming ACO as the tenant and clarifying U.S. Department of Energy (DOE) indemnification, before the transfers are completed.

The Order also stated that, if the proposed direct transfer of licenses was not completed within 180 days from the date of the issuance of the Order, the Order shall become null and void; however, on written application and for good cause shown, such date may be extended by order. The order was accompanied by a Safety Evaluation Report (SER) documenting the basis for the NRC staff's approval.

By letter dated July 22, 2011, as supplemented by electronic communication dated August 1, 2011, USEC submitted an ''Extension Request for Implementation of Order Relating to Consent to Transfer Materials Licenses,'' from August 9, 2011, to February 9, 2012. The extension was requested to allow USEC additional time to fully implement the conditions of Order EA–11–013. The NRC evaluated the information provided and concluded that USEC's submittal showed good cause for extending the effectiveness of the NRC's Order. The NRC staff also concluded that the basis for originally approving the transfers of USEC's licenses remained valid and fully supported the NRC staff's previous findings and, as such, the NRC issued Order EA–11–180 extending the implementation date of Order EA–11–013 to February 9, 2012. The Order was accompanied by an SER documenting the basis for the NRC staff's approval.

By letter dated January 6, 2012, USEC submitted a second ''Extension Request for Implementation of Orders Relating to Consent to Transfer Materials Licenses,'' from February 9, 2012, to May 18, 2012. By letter dated January 27, 2012, USEC provided supplemental information requesting a change for the implementation of the Order from May 18, 2012, to February 8, 2013. In its submittals, USEC stated that, although it has been working diligently with DOE to achieve conditional commitment (the next step of the loan guarantee process), this process had not been concluded such that implementation of the Order conditions would be met by the due date (i.e., August 9, 2011). USEC also stated that it appeared that the date for completion of activities associated with the sub-lease will extend beyond May 18, 2012, and it will not be able to fully satisfy the Order Conditions by February 9, 2012, as required by Order EA–11–180. The NRC evaluated the information provided and concluded that USEC's submittal showed good cause for extending the effectiveness of Order EA–11–013. The NRC also determined that the basis for originally approving the transfers of USEC's licenses for the Lead Cascade and the ACP from USEC to ACO remained valid. As a result, the NRC issued Order EA–12–027 extending the implementation date of Orders EA–11–013 and EA–11–180 to February 8, 2013. The Order also stated that, if the proposed direct transfer of licenses is not completed by February 8, 2013, this Order and the February 10, 2011, Order shall become null and void. However, upon written application and for good cause shown, the February 8, 2013, date may be extended by further Order. The order was accompanied by an SER documenting the basis for the NRC staff's approval.

In accordance with Order EA–11–013, by letter dated February 7, 2013 (ACO 13–0011), USEC informed the NRC of the completion of the Order requirements. The transfer took place on February 8, 2013, on which date the License Amendments were issued. These actions comply with the standards and requirements of the Atomic Energy Act of 1954, as amended, and NRC's rules and regulations as set forth in 10 CFR Chapter 1.

Further Information

In accordance with 10 CFR 2.390 of the NRC's ''Agency Rules of Practice and Procedure,'' the details with respect to this action, including the SER and accompanying documentation, and license amendment request, are available electronically at the NRC's Library at *http://www.nrc.gov/reading-rm/adams.html.* From this site, you can access the NRC's Agencywide Document Access and Management System (ADAMS), which provides text and image files of NRC's public documents. The ADAMS accession numbers for the documents related to this notice are:

1	NRC Order EA–11–013, dated February 10, 2011	ML103630745
2	Safety Evaluation Report on Request for Written Consent for the Direct Transfer of Licenses	ML103630748
3	Summary of Public Meeting With Ohio Sierra Club	ML110280305
4	NRC Order EA–11–180, dated August 8, 2011	ML112140086
5	Safety Evaluation Report on Request to Extend the Date by Which the Direct Transfer of Licenses is to be Completed.	ML112140088
6	NRC Order EA–12–027, dated February 8, 2012	ML12027A033
7	Safety Evaluation Report on Second Request to Extend the Date by Which the Direct Transfer of Licenses is to be Completed.	ML12027A034
8	Amendment 7 to SNM–7003, dated February 8, 2013	ML13038A708
9	Amendment 3 to SNM–2011, dated February 8, 2013	ML13038A709

Persons who do not have access to ADAMS, or who encounter problems in accessing the documents located in ADAMS, should contact the NRC Public Document Room (PDR) Reference staff at 1–800–397–4209, 301–415–4737, or via email to *pdr@nrc.gov.*

These documents may also be viewed electronically on the public computers located at the NRC's PDR, O 1 F21, One White Flint North, 11555 Rockville Pike, Rockville, MD 20852. The PDR reproduction contractor will copy documents for a fee.

Dated at Rockville, Maryland, this 27th day of February, 2013.

For the Nuclear Regulatory Commission.

Osiris Siurano-Perez,

Project Manager, Uranium Enrichment Branch, Division of Fuel Cycle Safety and Safeguards, Office of Nuclear Material Safety and Safeguards.

[FR Doc. 2013–05488 Filed 3–8–13; 8:45 am]

BILLING CODE 7590–01–P

NUCLEAR REGULATORY COMMISSION

[NRC–2013–0045]

Biweekly Notice; Applications and Amendments to Facility Operating Licenses and Combined Licenses Involving No Significant Hazards Consideration; Correction

AGENCY: Nuclear Regulatory Commission.

ACTION: Notice; correction.

SUMMARY: The U.S. Nuclear Regulatory Commission (NRC) is correcting a notice that was published in the **Federal Register** on March 4, 2013 (78 FR 14126), regarding the applications and amendments to facility operating licenses and combined licenses involving no significant hazards consideration. This action is necessary to correct a missing NRC Docket ID in the **ADDRESSES** and **SUPPLEMENTARY INFORMATION** sections of this document that was inadvertently omitted. In addition, this action makes minor editorial corrections to those sections.

FOR FURTHER INFORMATION CONTACT: Cindy Bladey, Chief, Rules, Announcements, and Directives Branch, Office of Administration, U.S. Nuclear Regulatory Commission, Washington, DC 20555–0001; telephone 301–415–3667; email: *Cindy.Bladey@nrc.gov.*

Correction

In the **Federal Register** (FR) of March 4, 2013, in FR Doc. 2013–04885, on page 14126, second column, correct the **ADDRESSES** section to read:

ADDRESSES: You may access information and comment submissions related to this document, which the NRC possesses and is publicly available, by searching on *http://www.regulations.gov* under Docket ID NRC–2013–0045. You may submit comments by the following methods:

- *Federal Rulemaking Web site:* Go to *http://www.regulations.gov* and search for Docket ID NRC–2013–0045. Address questions about NRC dockets to Carol Gallagher; telephone: 301–492–3668; email: *Carol.Gallagher@nrc.gov.*
- *Mail comments to:* Cindy Bladey, Chief, Rules, Announcements, and Directives Branch (RADB), Office of Administration, Mail Stop: TWB–05–B01M, U.S. Nuclear Regulatory Commission, Washington, DC 20555–0001.
- *Fax comments to:* RADB at 301–492–3446.

For additional direction on accessing information and submitting comments, see ''Accessing Information and Submitting Comments'' in the **SUPPLEMENTARY INFORMATION** section of this document.

In the same document, on page 14126, third column, correct Section I, ''Accessing Information and Submitting Comments,'' of the **SUPPLEMENTARY INFORMATION** section to read:

A. Accessing Information

Please refer to Docket ID NRC–2013–0045 when contacting the NRC about the availability of information regarding this document. You may access information related to this document, which the NRC possesses and is publicly available, by the following methods:

- *Federal Rulemaking Web site:* Go to *http://www.regulations.gov* and search for Docket ID NRC–2013–0045.
- *NRC's Agencywide Documents Access and Management System (ADAMS):* You may access publicly available documents online in the NRC Library at *http://www.nrc.gov/reading-rm/adams.html.* To begin the search, select ''ADAMS Public Documents'' and then select ''Begin Web-based ADAMS Search.'' For problems with ADAMS, please contact the NRC's Public Document Room (PDR) reference staff at 1–800–397–4209, 301–415–4737, or by email to *pdr.resource@nrc.gov.* Documents may be viewed in ADAMS by performing a search on the document date and docket number.
- *NRC's PDR:* You may examine and purchase copies of public documents at the NRC's PDR, Room O1–F21, One White Flint North, 11555 Rockville Pike, Rockville, Maryland 20852.

B. Submitting Comments

Please include Docket ID NRC–2013–0045 in the subject line of your comment submission, in order to ensure that the NRC is able to make your comment submission available to the public in this docket.

The NRC cautions you not to include identifying or contact information that you do not want to be publicly disclosed in your comment submission. The NRC will post all comment submissions at *http://www.regulations.gov* and enter the comment submissions into ADAMS, and the NRC does not routinely edit comment submissions to remove identifying or contact information.

If you are requesting or aggregating comments from other persons for submission to the NRC, then you should inform those persons not to include identifying or contact information that they do not want to be publicly disclosed in their comment submissions. Your request should state that the NRC does not routinely edit comment submissions to remove such information before making the comment submissions available to the public or entering the comment submissions into ADAMS.

Dated at Rockville, Maryland, this 5th day of March, 2013.

For the Nuclear Regulatory Commission.

Cindy Bladey,

Chief, Rules, Announcements, and Directives Branch, Division of Administrative Services, Office of Administration.

[FR Doc. 2013–05544 Filed 3–8–13; 8:45 am]

BILLING CODE 7590–01–P

SECURITIES AND EXCHANGE COMMISSION

[Release No. 34–69040; File No. SR–BX–2013–016]

Self-Regulatory Organizations; NASDAQ OMX BX, Inc.; Notice of Filing of Proposed Rule Change To Adopt a Directed Order Process

March 5, 2013.

Pursuant to Section 19(b)(1) of the Securities Exchange Act of 1934 (''Act''),[1] and Rule 19b–4 thereunder,[2] notice is hereby given that on February 21, 2013, NASDAQ OMX BX, Inc. (''BX'' or ''Exchange'') filed with the Securities and Exchange Commission (''SEC'' or ''Commission'') the proposed rule change as described in Items I, II, and III, below, which Items have been prepared by the Exchange. The Commission is publishing this notice to solicit comments on the proposed rule change from interested persons.

I. Self-Regulatory Organization's Statement of the Terms of Substance of the Proposed Rule Change

The Exchange has filed a proposed rule change offering a new enhancement [sic] to adopt a Direct Order process.

The text of the proposed rule change is below. Proposed new language is in italics; deletions are bracketed.

* * * * *

Chapter VI Trading Systems

* * * * *

[1] 15 U.S.C. 78s(b)(1).

[2] 17 CFR 240.19b–4.

Sec. 1 Definitions

The following definitions apply to Chapter VI for the trading of options listed on BX Options.

(a)–(d) No change.

(e) The term ''Order Type'' shall mean the unique processing prescribed for designated orders that are eligible for entry into the System, and shall include:

(1) [Reserved.] *Directed Order. The term ''Directed Order'' means an order to buy or sell which has been directed (pursuant to the Exchange's instructions on how to direct an order) to a particular Market Maker (''Directed Market Maker'') after the opening. Directed Orders are handled within the System pursuant to Chapter VI, Section 10(3).*

(2)–(11) No change.

(f)–(h) No change.

* * * * *

Sec. 6 Acceptance of Quotes and Orders

All bids or offers made and accepted on BX Options in accordance with the BX Options Rules shall constitute binding contracts, subject to applicable requirements of the Rules of the Exchange and the Rules of the Clearing Corporation.

(a) General—A System order is an order that is entered into the System for display and/or execution as appropriate. Such orders are executable against marketable contra-side orders in the System.

(1) All System Orders shall indicate whether they are a call or put and buy or sell and a price, if any. Systems Orders can be designated as Immediate or Cancel (''IOC''), Good-till-Cancelled (''GTC''), Day (''DAY'') or WAIT.

(2) A System order may also be designated as a *Directed Order,* Limit Order, a Minimum Quantity Order, a Market Order, a Price Improving Order, an All-or-None Order or a Post-Only Order.

(b)–(c) No change.

* * * * *

Sec. 10 Book Processing

System orders shall be executed through the BX Book Process set forth below:

(1)–(2) No change.

(3) [Price Improvement—any potential price improvement resulting from an execution in the System shall accrue to the party that is removing liquidity previously posted to the Book.]

Directed Order Processing.

(i) When BX's disseminated price is the NBBO and the Directed Market Maker is quoting at BX's disseminated price, the Directed Order shall be executed and allocated as follows:

(A) If the option is subject to the Price/Time execution algorithm, the Directed Market Maker shall receive 40% of the Directed Order at a particular price (''Directed Allocation''), unless such Directed Market Maker was first in time priority, in which case such Directed Market Maker shall receive the amount of the Directed Order equal to the Directed Market Maker's quote/order size at that price. If there are multiple resting quotes/orders from the same Directed Market Maker, the Directed Allocation will be distributed among them in time sequence. Then, the remainder of the Directed Order shall be allocated to other participants in price/time priority, including any remaining contracts of the Directed Market Maker and multiple quotes/orders from the same firm.

(B) If the option is subject to the Pro-Rata execution algorithm, Public Customer limit orders resting on the limit order book at the execution price will execute against the Directed Order first. Then, the Directed Market Maker shall receive the greater of: the pro-rata allocation to which such Directed Market Maker would otherwise be entitled or the Directed Allocation of 40% of the Directed Order at a particular price. If there are multiple quotes/orders from the same Directed Market Maker, the Directed Allocation will be distributed among those quotes/orders on a size pro rata basis. Once the Directed Allocation is determined, any remaining contracts associated with the Directed Market Maker's quotes/orders are excluded from the remaining pro-rata allocation. If there are any remaining contracts of the Directed Order, they will be allocated on a size pro rata basis among the remaining Participants (except the Directed Market Maker).

(ii) When BX's disseminated price is the NBBO, and the quotation disseminated by the Directed Market Maker on the opposite side of the market from the Directed Order is inferior to the NBBO, the Directed Order shall be automatically executed and allocated to those quotations and orders at the NBBO in accordance with this Section.

(iii) If BX's disseminated price is not the NBBO, the Directed Order shall be processed in accordance with Chapter VI, Sections 7, 10 and 11.

(iv) In addition, the following will apply:

(A) *A Directed Market Maker shall not be entitled to receive a number of contracts that is greater than the size associated with their order or quote at a particular price level.*

(B) *Directed Allocations are rounded up to the next whole number.*

(C) *The Directed Allocation is available for the life of the order and the Directed Market Maker is entitled to the Directed Allocation at all price levels that the Directed Market Maker has an order or quote.*

(D) *Directed Market Makers are subject to the quoting requirements of Chapter VII, Section 6(d)(i)(4).*

(E) *The Exchange will determine which options are subject to Directed Allocation.*

(4)–(7) No change.

(8) *Price Improvement—any potential price improvement resulting from an execution in the System shall accrue to the party that is removing liquidity previously posted to the Book.*

* * * * *

Chapter VII Market Participants

* * * * *

Sec. 6 Market Maker Quotations

(a)–(c) No change.

(d) *Continuous Quotes.* A Market Maker must enter continuous bids and offers for the options to which it is registered, as follows:

i. On a daily basis, a Market Maker must during regular market hours make markets consistent with the applicable quoting requirements specified in these rules, on a continuous basis [in at least sixty percent (60%) of the series] in options in which the Market Maker is registered.

(1) To satisfy this requirement [with respect to quoting a series], a Market Maker must quote[such series] *60*[90]% of the trading day (as a percentage of the total number of minutes in such trading day) or such higher percentage as BX may announce in advance. BX Regulation may consider exceptions to the requirement to quote *60*[90]% (or higher) of the trading day based on demonstrated legal or regulatory requirements or other mitigating circumstances. This obligation will apply to all of a Market Maker's registered options collectively, rather than on an option-by-option basis. *Compliance with this obligation will be determined on a monthly basis.*

(2) Notwithstanding the foregoing, Market Makers shall not be required to make two-sided markets pursuant to Section 5(a)(i) of these rules in any Quarterly Option Series, any adjusted option series, and any option series until the time to expiration for such series is less than nine months. Accordingly, the continuous quotation obligations set forth in this rule shall not apply to Market Makers respecting Quarterly Option Series, adjusted option

series, and series with an expiration of nine months or greater. For purposes of this subsection (2), an adjusted option series is an option series wherein one option contract in the series represents the delivery of other than 100 shares of underlying stock or Exchange-Traded Fund Shares.

(3) If a technical failure or limitation of a system of BX prevents a Market Maker from maintaining, or prevents a Market Maker from communicating to BX Options timely and accurate quotes, the duration of such failure or limitation shall not be included in any of the calculations under this subparagraph (i) with respect to the affected quotes.

(4) In options in which it receives Directed Orders, a Directed Market Maker must quote such options 90% of the trading day (as a percentage of the total number of minutes in such trading day) or such higher percentage as BX may announce in advance, applied collectively to all series in all of the options in which the Directed Market Maker receives Directed Orders (rather than on an option-by-option basis). Compliance with this obligation will be determined on a monthly basis.

ii.–iii. No change.

(e) No change.

* * * * *

II. Self-Regulatory Organization's Statement of the Purpose of, and Statutory Basis for, the Proposed Rule Change

In its filing with the Commission, the Exchange included statements concerning the purpose of and basis for the proposed rule change and discussed any comments it received on the proposed rule change. The text of these statements may be examined at the places specified in Item IV below. The Exchange has prepared summaries, set forth in sections A, B, and C below, of the most significant aspects of such statements.

A. Self-Regulatory Organization's Statement of the Purpose of, and the Statutory Basis for, the Proposed Rule Change

1. Purpose

The BX Options market launched on June 29, 2012 as a fully automated, price/time priority execution system built on the core functionality of the NASDAQ Options Market (''NOM'').[3] BX Options operates as an all-electronic system (''System'') with no physical trading floor and provides for the electronic display and execution of orders. In its proposed rule change to create the BX Options market, BX stated that, initially, BX Options would have the same market structure and rules as NOM, focusing on a price/time priority market.[4] BX further stated that, over time, as the BX Options market secured more participants, it would introduce additional, innovative functionality.[5] Accordingly, BX recently introduced a Size Pro-Rata execution algorithm for BX Options,[6] which executes orders at a particular price level based on the size of each Participant's quote or order as a percentage of the total size of all orders and quotes resting at that price. BX intends for some options to employ one algorithm while others employ a different one.

At this time, BX proposes its next enhancement to BX Options by offering a directed order process.[7] BX proposes to amend various rules to establish the process. First, BX proposes to define a Directed Order in Chapter VI, Section 1(e)(1) as an order to buy or sell which has been directed (pursuant to the Exchange's instructions on how to direct an order) to a particular Market Maker (''Directed Market Maker'') after the opening.[8] It further provides that Directed Orders are handled within the System pursuant to Chapter VI, Section 10(3), which is proposed new language.[9]

Pursuant to proposed Chapter VI, Section 10(3)(i), when BX's disseminated price is the National Best Bid/Offer (''NBBO'') and the Directed Market Maker is quoting at BX's disseminated price, the Directed Order shall be executed and allocated pursuant to one of BX's two execution algorithms for options.[10] If the option is subject to the Price/Time execution algorithm,[11] the Directed Market Maker shall receive 40% of the Directed Order (''Directed Allocation''), unless such Directed Market Maker was first in time priority, in which case such Directed Market Maker shall receive the amount of the Directed Order equal to the Directed Market Maker's quote/order size at that price. If there are multiple resting quotes/orders from the same Directed Market Maker, the Directed Allocation will be distributed among them in time sequence. Then, the remainder of the Directed Order shall be allocated to other participants in price/time priority, including any remaining contracts of the Directed Market Maker and multiple quotes/orders from the same firm.[12]

Example 1 (Price/Time)

NBBO: $1.00 × $1.05

BX Options Book [13]

Firm1 Order A Sell 20 at $1.05

Firm2 Order B Sell 20 at $1.05

MM3 Quote C $1.00 × $1.05 (size 100 × 100)

Firm4 Order D Sell 50 at $1.05

BX Options Best Offer: 190 at $1.05

BX receives a Directed Order to buy 100 contracts at $1.05 directed to MM3:

- 40 contracts execute against MM3 Quote C as a Directed Allocation: 40% of 100 contracts
- 20 contracts execute against Firm1 Order A based on time priority
- 20 contracts execute against Firm2 Order B based on time priority
- 20 additional contracts execute against MM3 Quote C based on time priority

The Directed Order is fully executed

No contracts execute against Firm4 because it is behind Firm1, Firm2, and MM3 in time priority and no more contracts remain

BX notes that, in this example, MM3 receives additional contracts beyond the Directed Allocation under the proposed rule, which permits the Directed Market Maker to retain its position in time priority for the remainder of the contracts. BX believes that it is reasonable and encourages Directed Market Makers to display their entire size, which benefits the quality of BX's market.

BX further notes that if a Public Customer order is involved, the Directed Allocation is nevertheless available to the Directed Participant, before the Public Customer order is executed. For example:

[3] *See* BX Options Rules, Chapter VI, Section 1(e)(11). Securities Exchange Act Release No. 67256 (June 26, 2012), 77 FR 39277 (July 2, 2012) (SR–BX–2012–030) (Approving the establishment of the BX Options market).

[4] *See id.* at 39278.

[5] Securities Exchange Act Release No. 66983 (May 14, 2012), 77 FR 29730 (May 18, 2012) (Notice of filing of SR–BX–2012–030).

[6] Securities Exchange Act Release No. 68041 (October 11, 2012), 77 FR 63903 (October 17, 2012) (SR–BX–2012–065).

[7] The term directed order has a different meaning on equities markets. *See e.g.,* NASDAQ Rule 4751(a)(9)[sic].

[8] BX also proposes to amend Chapter VI, Section 6(a)(2) to add Directed Orders to the list of System orders.

[9] Currently, Section 10(3) governs price improvement. It is being moved to new Section 10(8).

[10] Chapter VI, Section 10(1).

[11] Chapter VI, Section 10(1)(A).

[12] The BX Options trading system identifies Directed Market Makers by a particular code called an IFI, which BX will use to consider which quotes/orders are from the same firm.

[13] In each example, quotes and orders are listed in the sequence in which they were received.

Example 1A (Price/Time With a Public Customer)

NBBO: $1.00 × $1.05

BX Options Book

Firm1 Public Customer Order A Sell 20 at $1.05
Firm2 Broker Dealer Order B Sell 20 at $1.05
MM3 Quote C $1.00 × $1.05 (size 100 × 100)
Firm4 Broker Dealer Order D Sell 50 at $1.05
BX Options Best Offer: 190 at $1.05
BX receives a Directed Order to buy 100 contracts at $1.05 directed to MM3:
- 40 contracts execute against MM3 Quote C as a Directed Allocation: 40% of 100 contracts
- 20 contracts execute against Firm1 Public Customer Order A based on time priority
- 20 contracts execute against Firm2 Order B based on time priority
- 20 additional contracts execute against MM3 Quote C based on time priority

The Directed Order is fully executed
No contracts execute against Firm4 because it is behind Firm1, Firm2, and MM3 in time priority and no more contracts remain

BX is proposing to afford a Directed Allocation when there is a Public Customer order eligible to trade with the Directed Order. BX understands that other options exchanges' rules respecting directed orders do not provide a directed allocation to a directed market maker when there is a customer order ahead of a directed market maker at a particular price.[14] However, BX believes it is reasonable and consistent with applicable statutory standards for the Directed Allocation to occur, as proposed herein. The Public Customer order is not precluded from participating in the trade, but rather continues to stand in time priority once the Directed Allocation occurs. The Public Customer may not receive a full execution, but had the Directed Order not been sent to BX, the Public Customer may not have received an execution at all. The Directed Participant and their relationship with the provider of that Directed Order may have attracted the order to BX, to the benefit of the Public Customer order as well as all potential contra-side orders on the book. Accordingly, there is no particular reason for a Directed Allocation to operate differently just because a Public Customer order is involved; the very nature of the price/time priority model is that Public Customer orders are like all other orders and do not jump ahead in priority. BX does not believe that this is unfair to Public Customer orders; it is merely a different model.

New Section 10(3)(i)(B) provides that if the option is subject to the Size Pro-Rata execution algorithm,[15] Public Customer limit orders resting on the limit order book at the execution price will execute against the Directed Order first. Then, the Directed Market Maker shall receive the greater of: the pro-rata allocation to which such Directed Market Maker would otherwise be entitled pursuant to the Size Pro-Rata execution algorithm or the Directed Allocation of 40% of the Directed Order. If there are multiple resting quotes/orders from the same Directed Market Maker, the Directed Allocation will be allocated among those quotes/orders on a size pro-rata basis. Once the Directed Allocation is determined, any remaining contracts associated with the Directed Market Maker's quotes/orders are excluded from the remaining pro-rata allocation. If there are any remaining contracts of the Directed Order, they will be allocated on a size pro-rata basis among the remaining Participants (except the Directed Market Maker). For example:

Example 2 (Pro-Rata)

NBBO: $1.00 × $1.05

BX Options Book

Firm1 Public Customer Order A Sell 20 at $1.05
MM2 Quote B $1.00 × $1.05 (size 100 × 100)
MM3 Quote C $1.00 × $1.05 (size 50 × 50)
MM4 Quote D $1.00 × $1.05 (size 100 × 100)
BX Options Best Offer: 270 at $1.05
BX receives a Directed Order to buy 100 contracts at $1.05 directed to MM3:
- 20 contracts execute against Firm1 Public Customer Order A due to Public Customer priority
- 40 contracts execute against MM3 Quote C as a Directed Allocation (40% of 100 contract buy order)
- MM2 and MM4 each receive 20 contracts on a size pro-rata basis (50% each of 40 remaining contracts)

New Section 10(3)(ii) deals with the situation where BX's disseminated price is the NBBO but the quotation disseminated by the Directed Market Maker on the opposite side of the market from the Directed Order is inferior to the NBBO. In such case, the Directed Order shall be automatically executed and allocated to those quotations and orders at the NBBO in accordance with this Section as follows:

Example 3 (Price/Time or Pro-Rata—Same Outcome)

NBBO: $1.00 × $1.05

BX Options Book

Firm1 Order A Sell 100 at $1.05
MM2 Quote C $1.00 × $1.06 (size 100 × 100)
BX Options Best Offer: 100 at $1.05
BX receives a Directed Order to buy 50 contracts directed to MM2:
- 50 contracts execute against Firm1 Order A

The Directed Order is completely filled
MM2 does not receive a Directed Allocation because Quote C is not part of BX Options' best offer nor the NBBO

New Section 10(3)(iii) covers the situation where BX's disseminated price is not the NBBO; then, the Directed Order shall be processed in accordance with Chapter VI, Sections 7, 10 and 11.

Example 4 (Price/Time or Pro-Rata—Same Outcome)

CBOE Quote: $1.00 × $1.05 (size 10 × 10)

BX Options Book

MM1 Quote A $1.00 × $1.06 (size 100 × 100)
MM2 Quote B $1.00 × $1.06 (size 50 × 50)
BX Options Best Offer: 150 at $1.06
NBBO: $1.00 × $1.05 (size 160 × 10)
BX receives a Directed Order to buy 110 contracts at $1.06 directed to MM2:
- 10 contracts are routed and executed against the better away offer of $1.05 (CBOE)
- Because the CBOE offer is executed, BX Options is now the NBBO
- 40 contracts execute against MM2 Quote B as a Directed Allocation (40% of 100 contracts remaining from the Directed Order)
- 60 contracts execute against MM1 Quote A

In this example, BX was not initially at the NBBO, but once the National Best Offer (''NBO'') was exhausted, BX's offer of 150 contracts at $1.06 became the NBO. BX proposes to permit the Directed Allocation at the next price level, even though the Directed Participant was not at the NBBO at the time of order receipt, as described further below. BX understands that other options exchanges' directed order programs limit directed allocations to situations where the directed party is at the NBBO at the time of receipt of the

[14] For example, the directed order is allocated pursuant to the price/time priority rule on NYSE Arca. *See* NYSE Arca Rule 6.76A(a)(1)(A)(ii).

[15] Chapter VI, Section 10(1)(B).

directed order. BX believes that it is consistent with the purpose of the NBBO requirement to structure its Directed Order program as proposed herein for the following reasons.

The purpose of the requirement for the directed participant to be at the NBBO is to encourage such participant to quote competitively rather than to quote a wide market and wait for directed orders to arrive. BX believes that permitting the Directed Market Maker to receive a Directed Allocation even if such market maker was not on the NBBO at the time of receipt of the Directed Order still encourages competitive quoting. The Directed Order will trade at the NBBO at the time it was received with whatever contracts are available. If, and only if, contracts remain, then the order can execute at the next price level. At that next price level that is the new NBBO, the Directed Market Maker must be on the NBBO. Under the proposal, such market maker is being rewarded for being at the next best price, consistent with the purposes of the NBBO requirement. The market maker has an incentive to quote competitively because quoting a tick or two away from the NBBO is likely to result in very little trading for that market maker, especially if other quotes and orders are at or closer to the NBBO and especially in more liquid options.

Providing market makers with an enhanced allocation for order flow that is specifically directed to that market maker when the market maker is not initially on the NBBO is fair and does not create incentives to avoid quoting at the NBBO. There is fierce competition within the BX Options market and within the broader options market place. Within the BX Options market, there are many market makers who compete for available order flow on the basis of their quoted price. If a market maker's price is not equal to or better than all other quoted prices, they will simply not trade until all other market makers (and all other participants) trade at the superior price. This creates and supports healthy competition among market makers to quote the best price possible. In addition to the competition among market makers, there are also other market participants (broker-dealer, Public Customer, professional, etc.) who compete against each other and against market makers based on price, thus providing a further incentive for market makers to provide the best price possible. Finally, in the broader options marketplace, BX Options market makers not only have to compete with the market makers and participants on the BX Options market, but also with the plethora of market makers and other participants who quote or post orders on options exchanges other than BX Options. Indeed, the incentive to provide a competitive quote is strong due to the inherently competitive nature of today's options markets. Necessarily, a market maker who does not match or improve the NBBO on a consistent basis does not trade often. This proposal does not create a disincentive for a market maker to match or improve the NBBO. BX believes that this is an issue of timing of the directed allocation and not whether it is appropriate to afford a directed allocation at the next price level.

Providing directed order functionality should also add an additional layer of competition among those market makers who attempt to attract directed order flow. When market makers approach order flow providers to send directed order flow, the order flow providers expect clear data as evidence that directing order flow to the market maker will benefit the order flow provider and more importantly the order flow provider's customers. As more market makers attempt to attract order flow, they will likely need to show ever improving quote statistics. If a market maker were to quote $0.01 outside the NBBO in hopes of capturing some miniscule amount of order flow at a better price than everyone else, the order flow provider would see this in their quality of execution statistics and simply stop directing order flow to the market maker. Here again, there is a strong incentive to be matching or improving the NBBO in order to attract order flow and trade.

BX notes that at the time of the approval of the first directed order programs, routing among the options exchanges occurred through a central linkage process and executions through multiple price levels were not as seamless and efficient as today. In the current environment, executions occur across multiple price levels with simultaneous outbound routing. BX believes that order execution should not be inhibited by the artificial constraint of limiting directed allocations to directed participants who are on the NBBO at the time of order receipt in an options marketplace with vigorous competition and actively changing markets. It is sufficient for the directed participant to be on the NBBO at the time of execution.

New Section 10(3)(iv) incorporates several additional provisions respecting the Directed Order process. Specifically, a Directed Market Maker shall not be entitled to receive a number of contracts that is greater than the size associated with their order or quote at a particular price level. This provision is common in other options exchanges' directed order programs and is intended to incent Directed Market Makers to show more size. Much like a market maker has an incentive to match or improve the NBBO in order to trade more often, a market maker also has the incentive to display as much liquidity as possible in order to trade more volume. The resulting additional size at the NBBO benefits investors by making the market more liquid, which, in turn, makes it easier for investors to enter and exit their specific options positions.

In addition, Directed Allocations are rounded up to the next whole number.

Example 5 (Price/Time or Pro-Rata—Same Outcome)

NBBO: $1.00 × $1.05

BX Options Book

MM1 Quote A $1.00 × $1.05 (size 100 × 100)
MM2 Quote B $1.00 × $1.05 (size 50 × 50)
BX Options Best Offer: 150 at $1.05
BX receives a Directed Order to buy 91 contracts at $1.05 directed to MM2:
- 37 contracts execute against MM2 Quote B as a Directed Allocation (40% of 91 = 36.4 rounded up to 37)
- 54 contracts execute against MM1 Quote A

BX understands that the directed order programs of other options exchanges have generally limited the amount of the directed allocation to 40% of the size of the directed order, which is what BX has proposed herein. Because BX intends to round that allocation up to the nearest whole number, BX acknowledges that it is mathematically possible for its proposed Directed Allocation to exceed 40% in certain situations, but, of course, because it is rounding to the nearest whole number, rounding will necessarily never result in more than one additional options contract being added to the Directed Allocation. Even if such one additional contract caused the Directed Allocation to exceed 40%, BX believes that this is appropriate and reasonable because it is only one contract, regardless of the percentage.[16] Other options entitlement programs approved by the Commission sometimes exceed a 40% guarantee, also in limited, mathematically-driven situations. For

[16] Generally, the larger the number of contracts being rounded, the smaller the percentage, with some mathematical variation. For example, an order of 9 contracts would round up from 3.6 to 4 contracts or 44.44% of the order, whereas an order for 91contracts would be rounded up for directed allocation purposes from 36.4 to 37 contracts or 40.66% of the order.

example, the specialist or lead market maker entitlement permits the allocation of five contracts and less to a particular participant, which is much greater than the one contract proposed herein (i.e. the specialist entitlement allows for a 100% allocation for orders of 5 contracts or less).[17] Furthermore, specialist entitlement programs also provide for a 60% allocation in situations where the split is between two participants. Furthermore, pursuant to proposed subparagraph (iv)(C), the Directed Allocation is available for the life of the order. If a Directed Order is not executed upon receipt, it retains its status as a Directed Order, such that, once it becomes executable, it is subject to Directed Order Handling under new Section 10(3).

Example 6 (Price/Time or Pro-Rata—Same Outcome)

CBOE Quote: $1.00 × $1.05 (size 10 × 10)

NBBO: $1.00 × $1.05 (size 160 × 10)

BX Options Book

MM1 Quote A $1.00 × $1.06 (size 100 × 100)
MM2 Quote B $1.00 × $1.06 (size 50 × 50)
BX Options Best Offer: 150 at $1.06
BX receives a non-routable Directed Order to buy 100 contracts at $1.06 directed to MM2:
The order is posted on the BX Options book at $1.05 and displayed at $1.04 [18]
CBOE updates its quote to $1.00 × $1.07 (size 10 × 10)
The new NBBO is $1.00 × $1.06 (size 160 × 150)
The Directed Order can now execute against the BX Options book at $1.06 as follows:
- 40 contracts execute against MM2 Quote B as a Directed Allocation (40% of the 100 contract buy order)
- 60 contracts execute against MM1 Quote A

The Exchange believes that it is useful and beneficial for the order to retain its status as a Directed Order, because this handling is consistent with the order instructions and original intent of the submitting Participant. On other options exchanges, the ''directed order'' designation is only considered upon receipt of the order.[19] BX believes that its Participants may find this feature attractive; otherwise, Participants might consider cancelling and re-entering the order so it is treated as a Directed Order, which would be less efficient and would increase message traffic. BX does not believe that retaining directed order status on the book is controversial or inconsistent with the Act. Nor does BX believe that it undermines the policy underpinnings of directed order programs. Rather, it is an innovative enhancement intended to make entering directed orders more efficient and modern. It is possible that more directed allocations will occur because orders retain their directed order status, but the same result could be achieved today by, inefficiently, reentering directed orders rather than leaving them on the book as non-directed orders.

In addition, the Directed Market Maker is entitled to the Directed Allocation at all price levels at which the Directed Market Maker has an order or quote. This is intended to reflect that orders are executable at multiple price levels, and that, today, market makers can enter orders at multiple price levels.

Example 7 (Price/Time or Pro-Rata—Same Outcome)

NBBO: $1.00 × $1.05

BX Options Book

MM1 Quote A $1.00 × $1.05 (size 20 × 20)
MM2 Quote B $1.00 × $1.05 (size 10 × 10)
MM3 Quote C $1.00 × $1.06 (size 100 × 100)
MM2 Quote D $1.00 × $1.06 (size 50 × 50)
BX Options Best Offer: 30 at $1.05
BX receives a Directed Order to buy 110 contracts at $1.06 directed to MM2:
- 20 contracts execute against MM1 Quote A
- 10 contracts execute against MM2 Quote B
- $1.05 price level is completely exhausted
- 32 contracts execute against MM2 Quote D as a Directed Allocation (40% of 80 remaining contracts from buy order)
- 48 contracts execute against MM3 Quote C

New Quoting Requirement for All Market Makers

BX also proposes to change the quoting obligation applicable to its Market Makers. Currently, Chapter VII, Section 6(d) provides that on a daily basis, a Market Maker must during regular market hours make markets consistent with the applicable quoting requirements specified in these rules, on a continuous basis in at least sixty percent (60%) of the series in options in which the Market Maker is registered. It further provides that, to satisfy this requirement with respect to quoting a series, a Market Maker must quote such series 90% of the trading day (as a percentage of the total number of minutes in such trading day) or such higher percentage as BX may announce in advance. BX Regulation may consider exceptions to the requirement to quote 90% (or higher) of the trading day based on demonstrated legal or regulatory requirements or other mitigating circumstances.

BX proposes to better align its market maker quoting requirement with that of other exchanges, such as NYSE Arca and NYSE MKT. Specifically, BX proposes to reduce the quoting requirement for non-Directed BX Options Market Makers as follows: A Market Maker must quote such options 60% of the trading day (as a percentage of the total number of minutes in such trading day) or such higher percentage as BX may announce in advance. BX Regulation may consider exceptions to the requirement to quote 60% (or higher) of the trading day based on demonstrated legal or regulatory requirements or other mitigating circumstances. This obligation will apply to all of a Market Maker's registered options collectively, rather than on an option-by-option basis. Compliance with this obligation will be determined on a monthly basis. This is the same requirement as on other options exchanges.[20]

BX believes that this is appropriate for two reasons. First, BX's current Market Maker quoting requirement is much more stringent than certain other exchanges. Quoting *each series* 90% of the trading day is much more stringent than looking at all options in which a Market Maker is registered, because it allows for some number of series not to be quoted at all, as long as the overall standard is met. This better accommodates the occasional issues that may arise in a particular series, whether technical or manual. The existing requirement may at times discourage liquidity in particular options series because a market maker is forced to focus on a momentary lapse rather than using the appropriate resources to focus on the options series

[17] The specialist on NYSE MKT receives a 100% allocation on orders of 5 contracts or less and 40% of other eligible orders, even though the specialist's quoting obligation is the same as the proposed BX Options Directed Market Maker quoting obligation.

[18] *See* Chapter VI, Section 11.

[19] *See e.g.,* Phlx Rule 1080(l)(ii), which provides: When the Exchange's disseminated price is the NBBO *at the time of receipt* of the Directed Order, and the Directed Specialist, SQT or RSQT is quoting at the Exchange's disseminated price, the Directed Order shall be automatically executed and allocated in accordance with Rule 1014(g)(viii).

[20] *See* NYSE Arca Rule 6.88 and NYSE MKT Rule 964.1NY.

that need and consume additional liquidity. As a new market, BX believes that it can better attract Market Makers to the BX Options market and grow its market if its quoting obligation is more in line with that of other exchanges. In addition, as BX seeks to introduce directed orders, the market maker quoting obligation has become an obstacle to crafting a competitive, attractive directed order program. Specifically, because the Commission has required directed participants to be subject to heightened quoting obligations as compared to non-directed market makers, BX would have to adopt a Directed Market Maker quoting obligation more stringent than the current 90% of the time/60% of the series requirement for regular BX Options Market Makers. BX does not believe that a quoting requirement for greater than 90% of the time would attract Directed Market Makers to BX Options, as BX embarks on growing its market with new functionality and features. In fact, a more stringent quoting requirement would likely discourage new market makers from participating in the BX Options market and inhibit current market makers' ability to provide liquidity effectively.

New Quoting Requirement for Directed Market Makers

New Section 10(3)(iv)(D) makes clear that Directed Market Makers are subject to the quoting requirements of new Chapter VII, Section 6(d)(iv). Specifically, in options in which it receives Directed Orders, a Directed Market Maker must quote 90% of the trading day (as a percentage of the total number of minutes in such trading day) or such higher percentage as BX may announce in advance. BX Regulation may consider exceptions to the requirement to quote 90% (or higher) of the trading day based on demonstrated legal or regulatory requirements or other mitigating circumstances. This obligation will apply collectively to all series in all of the options in which the Directed Market Maker receives Directed Orders, rather than on an option-by-option basis. Compliance with this obligation will be determined on a monthly basis. This quoting obligation is more stringent than that which is applicable to regular BX Options Market Makers, who will now have to quote, under this proposal, at least 60% of the time the Exchange is open for trading in registered options. Such quotations must meet the quote width requirements of Chapter VII, Section 6(d)(ii). Once a Directed Market Maker receives a Directed Order, the heightened quoting obligation is triggered and applies to the options in which the Directed Market Maker receives Directed Orders.

Lastly, Section 10(3)(iv)(E) will provide that the Exchange will determine which options have the Directed Allocation functionality available.[21] BX will issue an Options Trader Alert to inform its Participants in which options the Directed Allocation will be available.

Conclusion

In summary, BX seeks to compete with the many options exchanges that offer directed orders in their respective markets and seeks to introduce directed order functionality, as described above.

2. Statutory Basis

The Exchange believes that its proposal is consistent with Section 6(b) of the Act [22] in general, and furthers the objectives of Section 6(b)(5) of the Act [23] in particular, in that it is designed to prevent fraudulent and manipulative acts and practices, to promote just and equitable principles of trade, to foster cooperation and coordination with persons engaged in facilitating transactions in securities, and to remove impediments to and perfect the mechanisms of a free and open market and a national market system, and, in general, to protect investors and the public interest, because it will establish a directed order process similar to what operates on other exchanges, as explained in detail herein, which will provide Participants with additional choices among the many competing exchanges with regard to their execution needs and strategies. BX Options operates in an intensely competitive environment and seeks to offer the same services that its competitors offer and in which its customers find value.

In its approval of other options exchange directed order programs, the Commission has, like proposals to amend a specialist guarantee, focused on whether the percentage of the ''entitlement'' would rise to a level that could have a material adverse impact on quote competition within a particular exchange, and concluded that such programs do not jeopardize market integrity or the incentive for market participants to post competitive quotes.[24] BX's proposed Directed Allocation of 40% is consistent with the directed order allocations of other options exchanges, except for the impact of rounding up, as described above, which BX does not believe is significant. BX notes that the remaining portion of each order will still be allocated based on the competitive bidding of market participants. In addition, at the time of execution, a BX Options Directed Market Maker will have to be quoting at the NBBO for the size of the Directed Allocation to receive the Directed Allocation, which is intended to incent the Directed Market Maker to quote aggressively, because he cannot merely step up and match the NBBO after the Directed Order is received. Similarly, BX believes there is an incentive for Directed Market Makers to quote competitively even though they may receive a Directed Allocation when such Directed Market Maker is not on the NBBO at the time of order receipt, but is at the time of execution. BX also notes that BX Options Directed Market Makers will have greater quoting obligations than other BX Options Market Makers.

B. Self-Regulatory Organization's Statement on Burden on Competition

The Exchange does not believe that the proposed rule change will impose any burden on competition not necessary or appropriate in furtherance of the purposes of the Act. The competition among the options exchanges is vigorous and this proposal is intended to afford the BX Options market the opportunity to compete for directed order flow. In that regard, the proposal is pro-competitive and will offer market participants an additional venue for the execution of directed orders. The Exchange does not believe that the proposal imposes a burden on intra-market competition not necessary or appropriate in furtherance of the purposes of the Act, because the ability to send directed orders is available to all Participants, and the ability to become a Market Maker is available to all Market Makers.

C. Self-Regulatory Organization's Statement on Comments on the Proposed Rule Change Received From Members, Participants, or Others

No written comments were either solicited or received.

III. Date of Effectiveness of the Proposed Rule Change and Timing for Commission Action

Within 45 days of the date of publication of this notice in the **Federal Register** or within such longer period (i) as the Commission may designate up to

[21] Directed Orders received in options where BX Options is not offering Directed Order processing will not be rejected; instead, such orders will be handled normally as non-Directed Orders.

[22] 15 U.S.C. 78f(b).

[23] 15 U.S.C. 78f(b)(5).

[24] *See* Securities Exchange Act Release No. 51759 (May 27, 2005), 70 FR 32860 (June 6, 2005) (SR–Phlx–2004–91).

90 days of such date if it finds such longer period to be appropriate and publishes its reasons for so finding or (ii) as to which the Exchange consents, the Commission shall: (a) By order approve or disapprove such proposed rule change, or (b) institute proceedings to determine whether the proposed rule change should be disapproved.

IV. Solicitation of Comments

Interested persons are invited to submit written data, views, and arguments concerning the foregoing, including whether the proposed rule change is consistent with the Act. The Commission also requests and encourages interested persons to submit comments on the following specific questions:

• Unlike the Directed Order rules of other options exchanges, BX's proposed rule would not require that a Directed Market Maker be quoting at the NBBO at the time a Directed Order is received. Would the lack of the NBBO quoting requirement impact market makers' incentives to quote competitively? If so, how? If not, why? If other options exchanges eliminated the requirement that Directed Market Makers quote at the NBBO to receive Directed Orders as part of their Directed Order process, what, if any impact would there be on market maker quoting behavior, and more generally on the quality of quotations in the options markets?

• Under the proposed rule, a Directed Market Maker to whom an order is directed in an option subject to the exchange's Price/Time execution algorithm would receive a 40% allocation ahead of orders of other market participants, including customer orders that had time priority over the Directed Market Maker's quotation. What, if any, concerns does this raise for the options markets?

Comments may be submitted by any of the following methods:

Electronic Comments

• Use the Commission's Internet comment form (*http://www.sec.gov/rules/sro.shtml*); or

• Send an email to *rule-comments@sec.gov.* Please include File Number SR–BX–2013–016 on the subject line.

Paper Comments

• Send paper comments in triplicate to Elizabeth M. Murphy, Secretary, Securities and Exchange Commission, 100 F Street NE., Washington, DC 20549–1090.

All submissions should refer to File Number SR–BX–2013–016. This file number should be included on the subject line if email is used. To help the Commission process and review your comments more efficiently, please use only one method. The Commission will post all comments on the Commission's Internet Web site (*http://www.sec.gov/rules/sro.shtml*). Copies of the submission, all subsequent amendments, all written statements with respect to the proposed rule change that are filed with the Commission, and all written communications relating to the proposed rule change between the Commission and any person, other than those that may be withheld from the public in accordance with the provisions of 5 U.S.C. 552, will be available for Web site viewing and printing in the Commission's Public Reference Room, 100 F Street NE., Washington, DC 20549, on official business days between the hours of 10:00 a.m. and 3:00 p.m. Copies of such filing also will be available for inspection and copying at the principal office of the Exchange. All comments received will be posted without change; the Commission does not edit personal identifying information from submissions. You should submit only information that you wish to make available publicly. All submissions should refer to File Number SR–BX–2013–016, and should be submitted on or before April 1, 2013.

For the Commission, by the Division of Trading and Markets, pursuant to delegated authority.[25]

Kevin M. O'Neill,

Deputy Secretary.

[FR Doc. 2013–05543 Filed 3–8–13; 8:45 am]

BILLING CODE 8011–01–P

SECURITIES AND EXCHANGE COMMISSION

[Release No. 34–69039; File No. SR–NASDAQ–2013–031]

Self-Regulatory Organizations; The NASDAQ Stock Market LLC; Notice of Filing of Proposed Rule Change To Amend the Attestation Requirement of Rule 4780 To Allow a Retail Member Organization To Attest That ''Substantially All'' Orders Submitted to the Retail Price Improvement Program Will Qualify as ''Retail Orders''

March 5, 2013.

Pursuant to Section 19(b)(1) of the Securities Exchange Act of 1934 (''Act''),[1] and Rule 19b–4 thereunder,[2] notice is hereby given that on February 19, 2013, The NASDAQ Stock Market LLC (''NASDAQ'' or ''Exchange'') filed with the Securities and Exchange Commission (''Commission'') the proposed rule change as described in Items I, II, and III below, which Items have been prepared by the self-regulatory organization. The Commission is publishing this notice to solicit comments on the proposed rule change from interested persons.

I. Self-Regulatory Organization's Statement of the Terms of Substance of the Proposed Rule Change

NASDAQ is filing with the Securities and Exchange Commission (''SEC'' or ''Commission'') a proposed rule change amend the attestation requirement of NASDAQ Rule 4780 to allow a Retail Member Organization (''RMO'') to attest that ''substantially all'' orders submitted to the Retail Price Improvement Program (the ''Program'') will qualify as ''Retail Orders.'' NASDAQ Rule 4780(b)(2)(C) currently requires RMOs to attest that ''any order'' will so qualify, effectively preventing certain significant retail brokers from participating in the Program due to operational constraints.

The text of the proposed rule change is available from NASDAQ's Web site at *http://nasdaq.cchwallstreet.com/Filings/*, at NASDAQ's principal office, and at the Commission's Public Reference Room.

II. Self-Regulatory Organization's Statement of the Purpose of, and Statutory Basis for, the Proposed Rule Change

In its filing with the Commission, NASDAQ included statements concerning the purpose of and basis for the proposed rule change and discussed any comments it received on the proposed rule change. The text of these statements may be examined at the places specified in Item IV below. NASDAQ has prepared summaries, set forth in sections A, B, and C below, of the most significant aspects of such statements.

A. Self-Regulatory Organization's Statement of the Purpose of, and Statutory Basis for, the Proposed Rule Change

1. Purpose

The Exchange is proposing an amendment to NASDAQ Rule 4780(b)(2)(C) to provide that an RMO may attest that ''substantially all'' of the orders it submits to the Program are Retail Orders, as defined in NASDAQ Rule 4780(a)(2), replacing the requirement that the RMO must attest

[25] 17 CFR 200.30–3(a)(12).

[1] 15 U.S.C. 78s(b)(1).

[2] 17 CFR 240.19b–4.

that all submitted orders qualify as Retail Orders.[3]

Under current NASDAQ Rule 4780, a member organization wishing to become an RMO must submit: (A) An application form; (B) supporting documentation; and (C) an attestation that ''any order'' submitted as a Retail Order will qualify as such under NASDAQ Rule 4780.[4]

Accordingly, the Exchange is proposing a de minimis relaxation of the RMO attestation requirement in order to accommodate these system limitations and expand the access of retail customers to the benefits of the Program. Specifically, as proposed an RMO would be permitted to send de minimis quantities of agency orders to the Exchange as Retail Orders that cannot be explicitly attested to under existing definitions of the Program.

The Exchange will issue an Equity Trader Alert to make clear that the ''substantially all'' language is meant to permit the presence of only isolated and de minimis quantities of agency orders that do not qualify as Retail Orders that cannot be segregated from Retail Orders due to systems limitations. In this regard, an RMO would need to retain, in its books and records, adequate substantiation that substantially all orders sent to the Exchange as Retail Orders met the strict definition and that those orders not meeting the strict definition are agency orders that cannot be segregated from Retail Orders due to system limitations, and are de minimis in terms of the overall number of Retail Orders sent to the Exchange.[5]

2. Statutory Basis

The Exchange believes that its proposal is consistent with the requirements of the Act and the rules and regulations thereunder that are applicable to a national securities exchange, and, in particular, with the requirements of Section 6(b) of the Act.[6] In particular, the Exchange believes the proposed change furthers the objectives of Section 6(b)(5) of the Act,[7] in that it is designed to prevent fraudulent and manipulative acts and practices, to promote just and equitable principles of trade, to foster cooperation and coordination with persons engaged in facilitating transactions in securities, and to remove impediments to and perfect the mechanism of a free and open market and a national market system.

The Exchange believes that the proposed rule change is designed to prevent fraudulent and manipulative acts and practices because, while the proposed rule change represents a relaxation of the attestation requirements, the change is a de minimis relaxation that still requires the RMO applicant to attest that ''substantially all'' of its orders will qualify as Retail Orders. The slight relaxation will allow enough flexibility to accommodate system limitations while still ensuring that only a fractional amount of orders submitted to the Program would not qualify as Retail Orders.

The Exchange believes that the proposed rule change promotes just and equitable principles of trade because it will ensure that similarly situated member organizations who have only slight differences in the capability of their systems will be able to equally benefit from the Program.

The Exchange believes that the proposed rule change will remove impediments to and perfect the mechanism of a free and open market and a national market system because it will allow member organizations, who are concerned about its system limitations not allowing 100% certification that submitted orders are Retail Orders, to still participate in the Program. By removing impediments to participation in the Program, the proposed change would permit expanded access of retail customers to the price improvement and transparency offered by the Program and thereby potentially stimulate further price competition for retail orders.

B. Self-Regulatory Organization's Statement on Burden on Competition

NASDAQ does not believe that the proposed rule change will result in any burden on competition that is not necessary or appropriate in furtherance of the purposes of the Act. The Exchange believes that the amendment, by increasing the level of participation in the Program, will increase the level of competition around retail executions such that retail investors would receive better prices than they currently do on the Exchange and potentially through bilateral internalization arrangements. The Exchange believes that the transparency and competitiveness of operating a program such as the Retail Price Improvement Program on an exchange market would result in better prices for retail investors, and benefits retail investors by expanding the capabilities of Exchanges to encompass practices currently allowed on non-Exchange venues.

C. Self-Regulatory Organization's Statement on Comments on the Proposed Rule Change Received From Members, Participants, or Others

Written comments were neither solicited nor received.

III. Date of Effectiveness of the Proposed Rule Change and Timing for Commission Action

Within 45 days of the date of publication of this notice in the **Federal Register** or within such longer period (i) as the Commission may designate up to 90 days of such date if it finds such longer period to be appropriate and publishes its reasons for so finding or (ii) as to which the Exchange consents, the Commission shall: (a) By order approve or disapprove such proposed rule change, or (b) institute proceedings to determine whether the proposed rule change should be disapproved.

IV. Solicitation of Comments

Interested persons are invited to submit written data, views, and arguments concerning the foregoing, including whether the proposed rule change is consistent with the Act. Comments may be submitted by any of the following methods:

Electronic Comments

- Use the Commission's Internet comment form *(http://www.sec.gov/rules/sro.shtml)*; or
- Send an email to *rule-comments@sec.gov*. Please include File Number SR–NASDAQ–2013–031 on the subject line.

Paper Comments

- Send paper comments in triplicate to Elizabeth M. Murphy, Secretary, Securities and Exchange Commission, 100 F Street NE., Washington, DC 20549–1090.

All submissions should refer to File Number SR–NASDAQ–2013–031. This file number should be included on the subject line if email is used. To help the Commission process and review your comments more efficiently, please use only one method. The Commission will

[3] *See* Securities Exchange Act Release No. 68747 (January 28, 2013) (SR–NYSE–2013–08) (substantially similar to the filing at hand).

[4] A Retail Order is defined in NASDAQ Rule 4780(a)(2), in part, as ''an agency or riskless principal order that originates from a natural person and is submitted to NASDAQ by a Retail Member Organization, provided that no change is made to the terms of the order with respect to price (except in the case that a market order is changed to a marketable limit order) or side of market and the order does not originate from a trading algorithm or any other computerized methodology.''

[5] The Financial Industry Regulatory Authority, Inc., on behalf of the Exchange, will review a member organization's compliance with these requirements.

[6] 15 U.S.C. 78f(b).

[7] 15 U.S.C. 78f(b)(5).

post all comments on the Commission's Internet Web site (*http://www.sec.gov/rules/sro.shtml*). Copies of the submission, all subsequent amendments, all written statements with respect to the proposed rule change that are filed with the Commission, and all written communications relating to the proposed rule change between the Commission and any person, other than those that may be withheld from the public in accordance with the provisions of 5 U.S.C. 552, will be available for Web site viewing and printing in the Commission's Public Reference Room, 100 F Street NE., Washington, DC 20549, on official business days between the hours of 10:00 a.m. and 3:00 p.m. Copies of such filing also will be available for inspection and copying at the principal office of NASDAQ. All comments received will be posted without change; the Commission does not edit personal identifying information from submissions. You should submit only information that you wish to make publicly available. All submissions should refer to File Number SR–NASDAQ–2013–031 and should be submitted on or before April 1, 2013.

For the Commission, by the Division of Trading and Markets, pursuant to delegated authority.[8]

Kevin M. O'Neill,

Deputy Secretary.

[FR Doc. 2013–05537 Filed 3–8–13; 8:45 am]

BILLING CODE 8011–01–P

[8] 17 CFR 200.30–3(a)(12).

SECURITIES AND EXCHANGE COMMISSION

[Release No. 34–69045; File No. SR–NYSE–2013–02]

Self-Regulatory Organizations; New York Stock Exchange LLC; Order Approving Proposed Rule Change Adopting Investigation, Disciplinary, Sanction, and Other Procedural Rules That Are Modeled on the Rules of the Financial Industry Regulatory Authority and To Make Certain Conforming and Technical Changes

March 5, 2013.

I. Introduction

On January 4, 2013, New York Stock Exchange LLC (''NYSE'' or the ''Exchange'') filed with the Securities and Exchange Commission (''Commission''), pursuant to Section 19(b)(1) of the Securities Exchange Act of 1934 (''Act'')[1] and Rule 19b–4 thereunder,[2] a proposed rule change to adopt rules governing investigations, discipline of members, sanctions that can be imposed as a result of disciplinary proceedings, cease and desist authority, and other procedural rules that are modeled on the rules of the Financial Industry Regulatory Authority (''FINRA''). The proposed rule change was published for comment in the **Federal Register** on January 24, 2013.[3] The Commission received no comments on the proposed rule change. This order approves the proposed rule change.

II. Description of the Proposal

On July 30, 2007, the National Association of Securities Dealers, Inc. (''NASD''), the Exchange, and NYSE Regulation, Inc. (''NYSER'') consolidated their member firm regulation operations into a combined organization, FINRA, and entered into a plan to allocate to FINRA regulatory responsibility for common rules and common members (''17d–2 Agreement'').[4] The 17d–2 Agreement was entered into in accordance with the requirements of Rule 17d–2 under the Act,[5] which permits self-regulatory organizations (''SROs'') to allocate regulatory responsibilities with respect to common members and common rules. In 2007, the parties also entered into a Regulatory Services Agreement (''RSA''), whereby FINRA was retained to perform certain regulatory services on behalf of NYSER for non-common rules. On June 14, 2010, the Exchange, NYSER, and FINRA amended the RSA and retained FINRA to perform the market surveillance and enforcement functions that had previously been performed by NYSER up to that point.[6] Accordingly, since June 14, 2010, FINRA has been performing all enforcement-related regulatory services on behalf of NYSER, including disciplinary proceedings relating to NYSE-only rules or against both dual members and non-FINRA members.

According to the Exchange, to facilitate FINRA's performance of these enforcement functions under the RSA and to further harmonize the rules of FINRA and NYSE generally, NYSE is proposing to adopt the text of the FINRA Rule 8000 Series and Rule 9000 Series, which set forth rules for conducting investigations and enforcement actions. The Exchange proposes to adopt most of FINRA's rules that are set forth in FINRA Rule 8000 and 9000 Series with no modification or only with conforming and technical changes.[7] However, in certain key respects, the proposed NYSE rules would continue to differ from FINRA's rules. Specifically, as described in more detail below, NYSE proposes, in part, to (1) establish processes for settling disciplinary matters both before and after the issuance of a complaint that differ both from NYSE's current Stipulation and Consent process and FINRA's current settlement processes; (2) retain the NYSE selection process for Hearing Panelists, rather than use FINRA's Panelists; (3) retain the substance of NYSE's current appellate process; (4) have NYSE's Chief Regulatory Officer (''CRO'') rather than FINRA's General Counsel make certain procedural decisions in the proposed rules; (5) have NYSE's CRO rather than FINRA's CEO authorize certain proceedings; (6) have FINRA's Chief Hearing Officer rather than FINRA's National Adjudicatory Council (''NAC'') review certain decisions; (7) retain the current NYSE list of minor rule violations, with certain technical and conforming amendments, while adopting FINRA's minor rule violation fine levels and FINRA's process for imposing them; and (8) not allow proceeds from fines and other monetary sanctions to be used for general corporate purposes. The major differences from the FINRA rules are highlighted below.[8]

[1] 15 U.S.C. 78s(b)(1).

[2] 17 CFR 240.19b–4.

[3] Securities Exchange Act Release No. 68678 (January 16, 2013), 78 FR 5213 (January 24, 2013) (''Notice'').

[4] *See* Securities Exchange Act Release No. 56148 (July 26, 2007), 72 FR 42146 (August 1, 2007) (File No. 4–544) (Notice of Filing and Order Approving and Declaring Effective a Plan for the Allocation of Regulatory Responsibilities).

[5] 17 CFR 240.17d–2.

[6] *See* Securities Exchange Act Release No. 62355 (June 22, 2010), 75 FR 36729 (June 28, 2010) (SR–NYSE–2010–46).

[7] The following proposed NYSE Rules would be identical to the text of their counterpart FINRA Rules: 9131–9134, 9136–9138, 9142, 9148, 9213–9215, 9222, 9233–9241, 9261, 9263–9266, and 9290. The Exchange also made only conforming and technical changes to certain FINRA rules, such as changing ''member'' and ''associated person'' to ''member organization'' and ''covered person,'' respectively; changing cross-references to FINRA rules to cross-references to Exchange rules; and other non-substantive changes. The following proposed NYSE Rules include only such conforming and technical amendments to their counterpart FINRA rule text: 8110, 8120, 8210, 8211, 8311, 8330, 9110, 9143, 9145, 9252, 9262, 9267, 9521, 9527, 9620, and 9870. Proposed NYSE Rule 8130 would set forth retention of jurisdiction provisions modeled on Article IV, Section 6 and Article V, Section 4 of the FINRA Bylaws. The text of the proposed rule is substantially the same as the text in FINRA's Bylaws, except that in paragraph (d) it contains a provision establishing how the transition period from NYSE Rule 477 will work. NYSE also made certain conforming changes to cross-references outside the 8000 and 9000 series.

[8] A detailed description of NYSE's current rules and proposed changes can be found in the Notice. *See supra* note 3.

Transition

Following approval of the proposed rule change, the Exchange intends to announce the effective date of the new rules at least 30 days in advance in an Information Memorandum to its members and member organizations. To further facilitate an orderly transition from the current rules to the new rules, the Exchange proposes that certain matters already initiated under the current rules would be completed under such rules.[9]

Proposed NYSE Rule 8000 Series

The Exchange proposes to adopt the text of FINRA Rules 8110 through 8330, Investigation and Sanctions, as NYSE Rules 8110 through 8330, with the differences described below.[10]

Unlike FINRA Rule 8313, proposed NYSE Rule 8313 would provide that the Exchange would publish all final disciplinary decisions issued under the proposed NYSE Rule 9000 Series, other than minor rule violations, on its Web site.[11] According to the Exchange, this codifies its long-standing practice. By way of comparison, FINRA's Rule 8313 provides that disciplinary complaints and decisions that meet certain criteria will be either published or made available upon request.

Further, unlike FINRA Rule 8320(a), the NYSE Rule would not provide that proceeds from fines and other monetary sanctions could be used for general corporate purposes. Currently, the Exchange uses fine monies for regulatory purposes subject to the approval of the NYSER Board.[12] The remainder of the proposed rule is substantially the same as the text in FINRA's counterpart rule, with only conforming and technical amendments.

Proposed NYSE Rule 9000 Series

The Exchange proposes to adopt the text of FINRA Rules 9110 through 9290, Code of Procedure, as NYSE Rules 9110 through 9290, with the differences described below.[13]

Proposed NYSE Rule 9130 Through 9138

Proposed NYSE Rules 9130 through 9138 would govern the service of a complaint or other procedural documents under the NYSE Rules. The text of these proposed rules, other than proposed NYSE Rule 9135, is identical to FINRA's counterpart rules. Proposed NYSE Rule 9135 differs from its FINRA counterpart because it deletes a reference to filing an appeal with FINRA's Office of Hearing Officer. As previously noted, the Exchange is retaining its current appeals process.

Proposed NYSE Rules 9140 Through 9148

Proposed NYSE Rules 9140 through 9148 are among the rules that would govern the conduct of disciplinary proceedings. Proposed NYSE Rule 9141 would govern appearances in a proceeding, notice of appearances, and representation.[14]

Generally, the text of proposed NYSE Rules 9142 through 9148 is substantially the same as the text of FINRA's counterpart rules, with only confirming and technical changes. However, proposed NYSE Rules 9144, 9146, and 9147 differ from FINRA's counterpart rules to reflect that the Exchange would retain its appellate process by replacing FINRA's NAC and Review Subcommittee with the Exchange's Board of Directors.

Proposed NYSE Rule 9150

Proposed NYSE Rule 9150 would provide that a representative can be excluded by an Adjudicator for improper or unethical conduct. The text of the proposed rule is substantially the same as the text in FINRA's counterpart rule, except for conforming and technical amendments and an amendment to reflect the Exchange's retention of its appellate process by replacing the NAC with the Exchange's Board of Directors.

Proposed NYSE Rule 9160

Proposed NYSE Rule 9160 would provide that no person may act as an Adjudicator if he has a conflict of interest or bias, or circumstances exist where his fairness could reasonably be questioned. In such case, the person must recuse himself or may be disqualified. The proposed rule would cover the recusal or disqualification of an Adjudicator, the Chair of the Exchange Board of Directors, or a Director. The text of the proposed rule is substantially the same as the text in FINRA's counterpart rule.[15]

Proposed NYSE Rules 9200 Through 9217

Proposed NYSE Rule 9200 would cover disciplinary proceedings. Generally, proposed NYSE Rules 9211, and 9213 through 9215 are substantially the same as the text in FINRA's counterpart rule, with only conforming and technical changes.

Proposed NYSE Rule 9212 would set forth the requirements of the complaint, amendments to the complaint, withdrawal of the complaint, and service of the complaint. The text of the proposed rule is modeled on the text in FINRA's counterpart rule, except that FINRA Rule 9212(a)(2) permits the Department of Enforcement or Department of Market Regulation to propose that the Chief Hearing Officer select one Panelist from the Market Regulation Committee if certain trading-related violations, described in FINRA Rule 9120(u), are alleged in the complaint. The Exchange proposes instead to permit the Chief Hearing Officer to select one Floor-Based

[9] *See* Notice, *supra* note 3, 78 FR at 5218–19 (discussing the particular circumstances under which the current rules would continue to apply).

[10] FINRA does not have a Rule 8212. Moreover, the Exchange is retaining NYSE Rule 410B, which concerns reports of listed securities transactions effected off the Exchange. As such, the Exchange is not proposing to adopt FINRA Rule 8213. NYSE is also not proposing to adopt FINRA Rule 8312, which describes FINRA's BrokerCheck disclosures. As such, to maintain consistency with FINRA's rule numbering, the Exchange has designated proposed NYSE Rules 8212, 8213 and 8312 as ''Reserved.''

[11] According to the Exchange, consistent with current practice, a determination in a statutory disqualification proceeding under the proposed NYSE Rule 9520 Series would not be considered a disciplinary decision and thus would not be subject to publication.

[12] *See* Securities Exchange Act Release Nos. 55003 (December 22, 2006), 71 FR 78497 (December 29, 2006) (SR–NYSE–2006–109) and 55216 (January 31, 2007), 72 FR 5779 (February 7, 2007).

[13] Proposed NYSE Rule 9120 would set forth definitions and is based on FINRA Rule 9120, which certain conforming changes for NYSE's proposed rules. Certain defined terms in FINRA Rule 9120 would be inapplicable in the Exchange's rules—''Counsel to the National Adjudicatory Council,'' ''District Committee,'' ''Extended Proceeding,'' ''Extended Proceeding Committee,'' ''FINRA Board,'' ''FINRA Regulation Board,'' ''General Counsel,'' ''Governor,'' ''Market Regulation Committee,'' ''Primary District Committee,'' ''Review Subcommittee,'' ''Statutory Disqualification Committee,'' and ''Subcommittee''—and therefore are not included in the proposed rule change. The Exchange also proposes to include certain definitions that are not included in FINRA's rule text. ''Board of Directors,'' ''Chief Regulatory Officer'' or ''CRO,'' ''covered person,'' ''Department of Market Regulation,'' ''Department of Member Regulation,'' ''Exchange,'' ''Floor-Based Panelist,'' ''Head of Market Regulation,'' and ''Office of Hearing Officers'' are definitions that appear in subsequent proposed rules and are necessary for harmonization with the Exchange's rules.

[14] The text of the proposed rule is the same as the text of FINRA's counterpart rule, except that the Exchange does not propose to adopt the text of FINRA Rule 9141(c), which provides that no former officer of FINRA shall, within one year after termination of employment with FINRA, make an appearance before an adjudicator on behalf of any other person under the Rule 9000 Series. The Exchange does not believe that it is necessary to bar its former employees from such appearances because its employees generally are not involved in the regulatory and disciplinary functions carried out by FINRA on behalf of the Exchange; as such, their appearance does not create the same type of conflict of interest. Thus, proposed NYSE Rule 9141(c) is marked ''Reserved.''

[15] The rule does not reference certain Adjudicators used by FINRA that the Exchange will not utilize in its proceedings (*e.g.,* NAC and Review Subcommittee); as such, proposed NYSE Rules 9160(b) and (c) are designated as ''Reserved.''

Panelist, who would be a person who is, or, if retired, was, active on the Floor of the Exchange, to serve on a Hearing Panel if the complaint alleges at least one cause of action involving activities on the Floor of the Exchange. Each subsequent reference in the FINRA rules to a Market Regulation Committee Panelist would be substituted with a reference to a Floor-Based Panelist in the proposed NYSE Rules.[16]

Proposed NYSE Rule 9216 would establish the acceptance, waiver, and consent (''AWC'') procedures by which a Respondent, before a complaint is issued, may execute a letter accepting a finding of violation, consenting to the imposition of sanctions, and agreeing to waive the right to a hearing, appeal, and certain other procedures.[17] It also would establish procedures for executing a minor rule violation plan letter.

The proposed rule is similar to FINRA Rule 9216, except that the Office of Disciplinary Affairs, on behalf of the Exchange Board of Directors, would be authorized to accept or reject an AWC or minor rule violation plan letter. If the AWC or minor rule violation plan letter were accepted by the Office of Disciplinary Affairs, it would be deemed final. If the letter were rejected by the Office of Disciplinary Affairs, the Exchange would be permitted to take any other appropriate disciplinary action with respect to the alleged violation or violations. If the letter were rejected, the member organization or covered person would not be prejudiced by the execution of the AWC or minor rule violation plan letter and such document could not be introduced into evidence in connection with the determination of the issues set forth in any complaint or in any other proceeding.[18]

The proposed AWC process also differs from the Exchange's current Stipulation and Consent procedure in NYSE Rule 476(g). Under current NYSE Rule 476(g), a Hearing Officer must act on a Stipulation and Consent submitted by either party—the ''respondent'' or ''any authorized officer or employee of the Exchange''—and may choose to convene a Hearing Panel. No Hearing Officer would be involved in the process under the proposed rule. Furthermore, any member of the Exchange Board of Directors, any member of the NYSER Committee for Review, and any Executive Floor Governor may require a review by the Exchange Board of Directors of any determination or penalty, or both, imposed by a Hearing Panel or Hearing Officer in connection with a Stipulation and Consent. In addition, the Respondent or the Division which entered into the written consent may require a review by the Exchange Board of Directors of any rejection of a Stipulation and Consent by the Hearing Panel. There would be no appeals or reviews of AWCs by the Exchange Board of Directors under the proposed rule change.

The Exchange also proposes to adopt aspects of FINRA's process and fine levels for minor rule violations while retaining the specific list of rules included in the Exchange's current minor rule violation plan, with certain technical and conforming amendments. Proposed NYSE Rule 9216(b) would be similar to FINRA Rule 9216(b), with technical amendments and amendments to make it consistent with proposed NYSE Rule 9216(a) in that the Office of Disciplinary Affairs could accept or reject the minor rule violation letter. While FINRA Rule 9216(b) would provide that a member or associated person that executes a minor rule violation letter waives any right to claim bias or prejudgment on the part of FINRA's General Counsel, the NAC, or any member of the NAC, the Exchange's proposed rule would provide that a member organization or covered person could not claim bias or prejudgment on the part of the CRO, the Exchange Board of Directors, Counsel to the Exchange Board of Directors, or any Director in order to conform with the Exchange's proposed rules.

Proposed NYSE Rule 9217 would set forth the rules that are included in the NYSE's minor rule violation plan under which a member organization or covered person could be fined, as described in proposed NYSE Rule 9216(b). The Exchange would retain the list of rules currently set forth in NYSE Rule 476A with certain technical and conforming changes under proposed NYSE Rule 9217, rather than adopt the list of rules in FINRA's plan.[19]

Proposed NYSE Rules 9220 Through 9222

Proposed NYSE Rules 9221 and 9222 would describe how a Respondent can request a hearing, how the notice of a hearing will be provided, and timing considerations. The text of the proposed rules is the same as that in FINRA's counterpart rules, except that it permits a Respondent to request a Floor-Based Panelist rather than a Market Regulation Committee Panelist.

Proposed NYSE Rules 9230 Through 9235

Proposed NYSE Rules 9231 and 9232 would govern the composition of Hearing Panels and Extended Hearing Panels. The rules also govern how panel members are approved and the criteria for selection of a Replacement Hearing Officer, Panelists, Replacement Panelists, and Floor-Based Panelists. Under the proposed rule change, the Exchange would use FINRA's Chief Hearing Officer and Hearing Officers from FINRA's Office of Hearing Officers; however, the Exchange would not use FINRA's pool of Panelists but would instead continue to draw Panelists appointed from the Exchange Hearing Board. As it is today, the Hearing Board would be appointed annually by the Chairman and would be composed of members of the Exchange who are not members of the Exchange Board of Directors and registered employees and non-registered employees of member organizations, as well as former members, former allied members, or registered and non-registered employees of member organizations who have retired from the securities industry.[20] As is the case under current NYSE Rule

[16] *See* proposed NYSE Rules 9221(a)(3), 9231(b) and (c), and 9232. The term ''Floor-Based Panelist'' would be defined in proposed NYSE Rule 9120(p).

[17] Proposed NYSE Rule 9270 would address settlement procedures after the issuance of a complaint.

[18] Under FINRA's rule, the Review Subcommittee or Office of Disciplinary Affairs may accept the AWC or letter or refer it to FINRA's NAC for acceptance or rejection, or the Review Subcommittee may reject the AWC or letter or refer it to the NAC for acceptance or rejection.

[19] The technical and conforming changes are as follows. First, the NYSE's current list of minor rules includes a reference to the record retention provisions in NYSE Rule 472(c); the reference would be corrected to refer to NYSE Rule 472(d). Second, the reference to the submission of blue sheets under NYSE Rule 410A would be supplemented with a reference to proposed NYSE Rule 8211. Third, the reference to the submission of books and records under NYSE Rule 476(a)(11) would be supplemented with a reference to proposed NYSE Rule 8210. Finally, there is a reference to NYSE Rule 1000–1005. NYSE Rule 1005 was deleted from the NYSE rules in 2006 and as such the Exchange proposes to change the reference to NYSE Rule 1000–1004. *See* Securities Exchange Act Release No. 53539 (March 22, 2006), 71 FR 16353 (March 31, 2006) (SR–NYSE–2004–05). The current list of NYSE minor rules includes some rules that have been more recently removed from the NYSE rules as part of the FINRA rule harmonization process, including NYSE Rules 312(h), 382(a), 352(b) and (c), 392, and 445(4). The Exchange proposes to maintain the references to these former rules in its current list of minor rules in proposed NYSE Rule 9217. By doing so, the Exchange could continue to resolve violations of them that occurred before the harmonization via a minor rule violation letter. This rationale for maintaining references to prior rules in the list of minor rule violations was noted in Securities Exchange Act Release No. 62940 (September 20, 2010), 75 FR 58452 (September 24, 2010) (SR–NYSE–2010–66).

[20] The Exchange no longer has allied members, but former allied members would continue to be eligible to be appointed to the Hearing Board, and the text of proposed NYSE Rule 9232 reflects that.

476(b), Panelists are required to be persons of integrity and judgment. There is one change in Hearing Board eligibility in the proposed rule. Currently, the Exchange requires that a Panelist cannot have been retired from the securities industry for more than five years. The Exchange is eliminating the five-year restriction in order to have the largest number of potential retired Panelists.

In addition, as noted above, while FINRA's rules permit the Chief Hearing Officer to select one Panelist from the Market Regulation Committee if certain trading-related violations are alleged in the complaint, the Exchange proposes instead to permit the Chief Hearing Officer to select one Floor-Based Panelist to serve on a Hearing Panel if the complaint alleges at least one cause of action involving activities on the Floor of the Exchange, consistent with the Exchange's practice under current NYSE Rule 476(b).

Proposed Rule 9232 would also include certain Panelist selection criteria that are included in FINRA Rule 9232. These criteria are expertise, absence of any conflict of interest or bias or any appearance thereof, availability, and the frequency with which a person has served as a Panelist in the last two years, favoring the selection of a person as a Panelist who has never served or who has served infrequently as a Panelist during the period.

Proposed NYSE Rules 9240 Through 9242

Proposed NYSE Rules 9241 and 9242 would govern the substantive and procedural requirements for pre-hearing conferences and pre-hearing submissions. The text of the proposed rules is identical to FINRA's counterpart rules, except that the Exchange does not propose to adopt the text of FINRA Rule 9242(b).[21]

Proposed NYSE Rules 9250 Through 9253

Proposed NYSE Rules 9250 through 9253 would address discovery, including the requirements and limitations relating to the inspection and copying of documents in the possession of Exchange staff, requests for information and limitations on such requests, and the production of witness statements and any harmless error relating to the production of witness statements. Proposed NYSE Rule 9252 is substantially the same as FINRA's counterpart rule with only technical amendments.

Proposed NYSE Rule 9251 would generally require the Department of Enforcement or Department of Market Regulation to make available to a Respondent any documents prepared or obtained in connection with the investigation that led to the proceedings, except that certain privileged or other internal documents, such as examination or inspection reports or documents that would reveal an examination, investigation, or enforcement technique or confidential source, or documents that are prohibited from disclosure under federal law, are not required to be made available. A Hearing Officer may require preparation of a withheld document list. Proposed NYSE Rule 9251 also sets forth procedures for inspection and copying of documents that have been produced. In addition, if a Document required to be made available to a Respondent pursuant to the proposed rule was not made available by the Department of Enforcement or the Department of Market Regulation, no rehearing or amended decision of a proceeding already heard or decided would be required unless the Respondent establishes that the failure to make the Document available was not harmless error. The Hearing Officer, or, upon review under proposed NYSE Rule 9310, the Exchange Board of Directors, would determine whether the failure to make the document available was not harmless error, applying applicable Exchange, FINRA, SEC, and federal judicial precedent.[22]

Under proposed NYSE Rule 9253, a Respondent could file a motion to obtain certain witness statements. The text of the proposed rule is substantially the same as FINRA's counterpart rule, except for conforming and technical changes and changes to reflect the Exchange's retention of its current appeals process.

Proposed NYSE Rules 9260 Through 9269

Proposed NYSE Rules 9260 through 9269 would govern hearings and decisions. These rules, other than proposed NYSE Rule 9268, are substantially the same as FINRA's rules. Proposed NYSE Rule 9268 would set forth the timing and the contents of a decision of the Hearing Panel or Extended Hearing Panel and the procedures for a dissenting opinion, service of the decision, and any requests for review. The text of the proposed rule is similar to FINRA Rule 9268, with conforming and technical changes, changes to reflect the Exchange's retention of its appeals process, and an additional provision to address the fact that the Exchange has member affiliates.[23] As such, in proposed NYSE Rule 9268, the Exchange proposes to include text providing that a disciplinary decision concerning a member that is an affiliate of the Exchange would not be subject to review under proposed NYSE Rule 9310 but instead would be treated as a final disciplinary action subject to Commission review.

Proposed NYSE Rule 9270

Proposed NYSE Rule 9270 would provide for a settlement procedure for a Respondent who has been notified that a proceeding has been instituted against him. The proposed settlement procedure would differ from FINRA Rule 9270, as noted below.

Proposed NYSE Rule 9270(c) would set forth the required content of the proposal, which would include a statement consenting to findings of fact and violations and a proposed sanction. The proposed rule would be substantially the same as FINRA's rule, except for conforming and technical changes and except that it would not require that the proposed sanction be consistent with FINRA's Sanction Guidelines. According to the Exchange, it currently does not have Sanction Guidelines and does not propose to follow FINRA's because they are tailored to FINRA's rules, not the Exchange's rules.

Proposed NYSE Rule 9270(d) would provide that by submitting a settlement offer a Respondent waives the right to a hearing, to claim bias or violations of the prohibition on ex parte communications, and to review by the

[21] Rule 9242(b) provides that no former officer of FINRA may, within one year after termination of employment with FINRA, appear as an expert witness in a proceeding under the Rule 9000 Series except on behalf of FINRA. The Exchange does not believe that it is necessary to bar its former employees from such appearances because its employees generally are not involved in the regulatory and disciplinary functions carried out by FINRA on behalf of the Exchange; as such, their appearance does not create the same type of conflict of interest.

[22] The text of the proposed rule is substantially the same as FINRA's counterpart rule, except for conforming and technical changes and changes to reflect the Exchange's retention of its current appeals process, and the addition of the Exchange's consideration of its own precedent with respect to determining harmless error. The proposed rule would not establish any preference for Exchange versus other precedent in this respect; rather the Adjudicators could determine in their discretion what precedent to apply.

[23] The Exchange has one member, Archipelago Securities, Inc., that is an affiliate of the Exchange that is used for inbound and outbound routing of certain orders. *See* NYSE Rule 17(c). The Exchange also has a joint venture with BIDS Holding, LP, an affiliate of which, BIDS Trading L.P., is a member of the Exchange. *See* NYSE Rule 2B.01.

Exchange Board of Directors, the Commission, or the courts. This differs from current NYSE Rule 476(g), which allows either party to request a hearing on a Stipulation and Consent or a Hearing Officer to convene a hearing on a Stipulation and Consent in certain circumstances; in addition, current NYSE Rule 476(g) allows the Exchange Board of Directors to call for review a determination or penalty imposed by a Hearing Panel or Hearing Officer.[24]

Proposed Rule 9270(e) would address contested settlement offers. Under the proposed rule, if a Respondent made an offer of settlement and the Department of Enforcement or the Department of Market Regulation opposed it, the offer of settlement would be contested and thereby deemed rejected, and thus the proceeding would proceed under the proposed NYSE Rule 9200 Series.[25]

Proposed NYSE Rule 9270(f) and (h) would address uncontested settlement offers. Under the proposed rule, if a hearing on the merits had not begun, the Office of Disciplinary Affairs could accept the settlement offer; if a hearing on the merits had begun, the Hearing Panel or Extended Hearing Panel could accept the settlement offer.[26] If they did not, the offer would be deemed withdrawn and the matter would proceed under the proposed NYSE Rule 9200 Series; the settlement offer would not be part of the record. The proposed text is modeled in part on FINRA's counterpart rules, FINRA Rule 9270(e) and (h), but differs in certain key respects. Under FINRA's rules, the NAC ultimately must accept the offer of settlement. The Exchange is retaining its appellate process and not utilizing the NAC. Therefore, the Exchange is not proposing to replicate this aspect of FINRA's rules. Further, the Exchange believes that it is unnecessary to have a second level of review of an uncontested settlement offer that is accepted by the Office of Disciplinary Affairs, Hearing Panel, or Extended Hearing Panel, as applicable, because all parties are in agreement with respect to the resolution of the matter.

Proposed NYSE Rule 9270(j) would provide that a Respondent may not be prejudiced by a rejected offer of settlement nor may it be introduced into evidence. The text of the proposed rule is substantially the same as FINRA Rule 9270(j).[27]

Proposed NYSE Rule 9280

Proposed NYSE Rule 9280 would set forth sanctions for contemptuous conduct by a Party or attorney or other representative, which may include exclusion from a hearing or conference, and sets forth a process for reviewing such exclusions. The text of the proposed rule is substantially the same as that in FINRA's counterpart rule, except that rather than having the NAC review exclusions, the Exchange proposes to have the Chief Hearing Officer review exclusions.

Proposed NYSE Rule 9290

The Exchange proposes to adopt the text of FINRA Rule 9290 for expedited disciplinary proceedings without any changes.

Proposed NYSE Rules 9300 Through 9310

The Exchange is not proposing to adopt FINRA's appellate and call for review processes as set forth in the FINRA Rule 9300 Series. Rather, the text of current NYSE Rule 476(f) and (l) would be moved to proposed NYSE Rule 9310, with certain technical and substantive changes described below.

Under proposed NYSE Rule 9310(a)(1), any Party, any Director, and any member of the NYSER Committee for Review could require a review by the Exchange Board of Directors of any determination or penalty, or both, imposed by a Hearing Panel or Extended Hearing Panel under the proposed NYSE Rule 9200 Series, except that neither Party could request a review by the Exchange Board of Directors of a decision concerning an Exchange member that is an affiliate. A request for review would be made by filing a written request with the Secretary of the Exchange, which states the basis and reasons for the review, within 25 days after notice of the determination and/or penalty was served upon the Respondent. The Secretary of the Exchange would give notice of any such request for review to the Parties.

The proposed rule differs from the current rule in one substantive respect. It would eliminate the authority of an Executive Floor Governor to require a review of a disciplinary decision. According to the Exchange, this authority is no longer necessary because the Exchange has moved away from a Floor-only trading model, and the Exchange's roster of member organizations includes those without any Floor presence. The Exchange believes that Executive Floor Governors no longer represent the full community of market participants who may be subject to disciplinary action.[28]

Under proposed NYSE Rule 9310(a)(2), the Secretary of the Exchange would direct the Office of Hearing Officers to complete and transmit a record of the disciplinary proceeding in accordance with NYSE Rule 9267. Within 21 days after the Secretary of the Exchange gives notice of a request for review to the Parties, or at such later time as the Secretary of the Exchange could designate, the Office of Hearing Officers would assemble and prepare an index to the record, transmit the record and the index to the Secretary of the Exchange, and serve copies of the index upon all Parties. The Hearing Officer who participated in the disciplinary proceeding, or the Chief Hearing Officer, would certify that the record transmitted to the Secretary of the Exchange was complete. Current NYSE Rule 476(f) does not contain such requirements; the text is modeled on FINRA Rule 9321.

Proposed NYSE Rule 9310(b) governing review is substantially the same as provided in current NYSE Rule 476(f), other than conforming and technical changes to align it with terms used in the remainder of the proposed NYSE Rule 9000 Series.

Proposed NYSE Rule 9310(c) governs requests for leave to adduce additional evidence; it is substantially the same as provided in current NYSE Rule 476(f), other than conforming and technical changes to align it with terms used in the remainder of the proposed NYSE Rule 9000 Series.

Proposed NYSE Rule 9310(d) prohibits the CEO from requiring a

[24] Proposed NYSE Rule 9270(d) would also differ from FINRA's counterpart rule to reflect the Exchange's retention of its appellate process and its designation of its CRO, rather than FINRA's General Counsel, to determine certain procedural matters. In addition, the text of the rule would differ from FINRA's counterpart in that it would delete references to General Counsel, the NAC, or any member of the NAC with respect to waiving claims of bias and replace them with references to the CRO, the Exchange Board of Directors, Counsel to the Exchange Board of Directors, or any Director to conform those provisions to the Exchange's proposed rules.

[25] The contested offer of settlement would not be transmitted to the Office of Hearing Officers, Office of Disciplinary Affairs, or Hearing Panel or Extended Hearing Panel, and would not constitute a part of the record in any proceeding against the Respondent making the offer. The proposed rule differs from FINRA's counterpart rule, FINRA Rule 9270(f), which permits a Hearing Panel or Extended Hearing Panel and the NAC to act on contested offers of settlement.

[26] Because the Exchange does not have sanction guidelines, the Office of Disciplinary Affairs, Hearing Panel, or Extended Hearing Panel, as applicable, would consider Exchange precedent or such other precedent as it deemed appropriate in determining whether to accept the settlement offer.

[27] The only difference is that proposed NYSE Rule 9270(j) references the Office of Disciplinary Affairs and does not include references to the NAC and Review Subcommittee, which the Exchange does not propose to utilize.

[28] The text also contains certain conforming and technical changes to align it with terms used in the remainder of the proposed NYSE Rule 9000 Series.

review by the Exchange Board of Directors and governs the CEO's recusal from reviews by the Exchange Board of Directors. It is substantially the same as NYSE Rule 476(l), other than conforming and technical changes to align it with terms used in the remainder of the proposed NYSE Rule 9000 Series.

Proposed NYSE Rules 9500 Through 9527

The proposed NYSE Rule 9500 Series governs all other proceedings under the Exchange Rules.

The proposed NYSE Rule 9520 Series would govern eligibility proceedings for persons subject to statutory disqualifications who are not FINRA members.[29] The scope of the proposed NYSE Rule 9520 Series is meant to be the same as FINRA Rule 9520 Series.[30]

The text of proposed NYSE Rule 9523 is similar to that in FINRA's counterpart rules, except for conforming and technical changes and except as follows. First, under proposed NYSE Rule 9523, if the disqualified member organization, sponsoring member organization, and/or disqualified person executed a letter consenting to a supervisory plan, it would be submitted to the Exchange's CRO. Under FINRA's rule, the letter is submitted to FINRA's Office of General Counsel, which submits it to the Chairman of the Statutory Disqualification Committee, acting on behalf of the NAC; the Chairman may accept or reject the plan or refer it to the NAC for action. The Exchange does not propose to utilize the NAC or the Statutory Disqualification Committee Chairman for this purpose. In addition, under FINRA's rule, the waiver of bias or prejudgment is with respect to the Department of Member Regulation, the FINRA General Counsel, the NAC and any member thereof, while under proposed NYSE Rule 9523, the waiver would be with respect to the Department of Member Regulation, the CRO, the Exchange Board of Directors, or any member thereof to conform to the Exchange's proposed rules.

Under proposed NYSE Rule 9524, if the CRO rejects the plan, the member organization or applicant may request a review by the Exchange Board of Directors. This differs from FINRA's process, which provides for a hearing before the NAC and further consideration by the FINRA Board of Directors. Because the Exchange does not propose to utilize the NAC, the Exchange proposes instead that the Exchange Board of Directors may hear any appeal.[31]

Proposed NYSE Rules 9550 Through 9559

Proposed NYSE Rules 9550 through 9559 would govern expedited proceedings, which are substantially similar to FINRA Rules 9550 through 9559, with the following changes to those rules.[32] The Exchange is not proposing to adopt the text of FINRA Rule 9551, which concerns failure to comply with the advertising and sales literature requirements in NASD Rule 2210. According to the Exchange, all NYSE member organizations that circulate advertising or sales literature are by definition doing business with the public, and therefore must be members of FINRA and are already subject to FINRA Rules 2210 and 9551. In addition, under the SEC Rule 17d–2 Agreement, FINRA is allocated responsibility for NYSE Rule 472, NYSE's counterpart to NASD Rule 2210.[33]

The Exchange also does not propose to adopt the text of FINRA Rule 9553, which concerns failure to pay fees, dues, assessments or other charges. The Exchange proposes to adopt the text of FINRA Rule 8320, which addresses the non-payment of fines and monetary sanctions and would continue to use NYSE Rule 309 for non-payment of all other amounts due to the Exchange.

Proposed NYSE Rule 9556 would provide procedures and consequences for a failure to comply with temporary and permanent cease and desist orders, which would be authorized by proposed NYSE Rule 9810. The text of proposed NYSE Rule 9556 is the same as FINRA Rule 9556, except in the following respects. First, the text contains conforming and technical changes. Second, under FINRA's rule, FINRA's CEO authorizes proceedings under FINRA Rule 9556; under the Exchange's proposed rule, the Exchange's CRO would have the authority. Third, FINRA's rule permits service of process by facsimile; the Exchange does not believe that this alternative service method is necessary and the service methods permitted under proposed NYSE Rule 9134 (which are identical to FINRA Rule 9134) would be sufficient. Finally, the Exchange does not propose to include a notice to its membership of decisions under the rule, as FINRA does, it would be duplicative of proposed NYSE Rule 8313.

Proposed NYSE Rule 9557 would allow the Exchange to issue a notice directing a member organization to comply with the provisions of NYSE Rule 4110 (Capital Compliance), 4120 (Regulatory Notification and Business Curtailment), or 4130 (Regulation of Activities of Section 15C Member Organizations Experiencing Financial and/or Operational Difficulties) or otherwise directing it to restrict its business activities. The notice would be immediately effective, except that a timely request for a hearing would stay the effective date for 10 business days (unless the Exchange's CRO determined otherwise) or until an order was issued by the Office of Hearing Officers, whichever occurs first. The notice could be withdrawn upon a showing that all the requirements were met.

The text of the proposed rule change is substantially the same as that in FINRA Rule 9557, except in the following respects. First, the text contains conforming and technical changes. Second, under FINRA's rule, FINRA's CEO exercises authority with respect to stays under the rule; under the Exchange's proposed rule, the Exchange's CRO would have the authority. Third, FINRA's rule permits service of process by facsimile; the Exchange does not believe that this alternative service method is necessary for the reasons stated above. Finally, the Exchange does not propose to include a notice to its membership of decisions under the rule, as FINRA does, because it would be duplicative of proposed NYSE Rule 8313.

Proposed NYSE Rule 9558 would allow the Exchange's CRO to provide written authorization to the Exchange staff to issue a written notice for a summary proceeding for an action authorized by Section 6(d)(3) of the Act. Such notice would be immediately effective. The text of the proposed rule change is substantially the same as that in FINRA Rule 9558, except as follows. First, the text contains conforming and technical changes. Second, under FINRA's rule, FINRA's CEO authorizes such proceedings. Third, the Exchange would not permit service of process by facsimile. Finally, the Exchange does not propose to include a notice to its membership of decisions under the rule, as FINRA does, because it would be

[29] FINRA has been processing statutory disqualification applications on behalf of the Exchange since 2007. *See supra* notes 4 and 6.

[30] NYSE intends to issue a notice similar to FINRA Regulatory Notice 09–19.

[31] FINRA Rule 9525 also allows for discretionary review by the FINRA Board; the Exchange does not propose to adopt a comparable rule. Further, the Exchange also does not propose to adopt the text of FINRA Rule 9526, which provides for expedited proceedings by the FINRA Board of Governors in certain instances.

[32] NYSE proposed Rules 9552, 9554 and 9555 are substantially the same as FINRA's counterpart rules, except that NYSE's proposed rules do not carry over FINRA's notice provisions because it would be duplicative of proposed NYSE Rule 8313.

[33] *See supra* note 4.

duplicative of proposed NYSE Rule 8313.

Proposed NYSE Rule 9559 would set forth uniform hearing procedures for all expedited proceedings under the proposed NYSE Rule 9550 Series. Proposed NYSE Rule 9559 differs from FINRA Rule 9559 as follows. First, any call for review would be conducted by the Exchange's Board of Directors rather than FINRA's NAC. Second, the Exchange would not utilize current or former members of the FINRA Financial Responsibility Committee for proceedings initiated under proposed NYSE Rule 9557, as FINRA does under its counterpart rule. The Exchange would use the same pool of Hearing Panelists from the Hearing Board as it uses for other proceedings. Third, any instance in FINRA's rule that authorized FINRA's CEO to act would instead authorize the Exchange's CRO to act. Fourth, the Exchange does not propose to adopt the text of FINRA Rule 9559(r), which provides for the publication of decisions under the Rule, because it would be duplicative of proposed NYSE Rule 8313. Fifth, the Exchange does not propose to adopt the text of FINRA Rule 9559(q)(1) that sets forth 14-day and 21-day call for review periods because a call for review period would be described in proposed NYSE Rule 9310. Proposed NYSE Rule 9559(q)(1) would instead state that calls for review would be conducted in accordance with proposed NYSE Rule 9310, which, consistent with the time period in current NYSE Rule 476(f), would provide for a 25-day call for review period. Finally, the proposed text contains conforming and technical changes.

Proposed NYSE Rule 9600 Series

The Exchange proposes to adopt a new NYSE Rule 9600 Series, which would set forth procedures by which a member organization could seek exemptive relief from current NYSE Rules 4311(carrying agreements) and 4360 (fidelity bonds) and proposed NYSE Rule 8211 (submission of electronic blue sheet data). The rule text would be modeled on FINRA's Rule 9600 Series; the Exchange's proposed rules primarily differ from FINRA's in that they contain technical and conforming changes and that the Exchange's CRO, rather than FINRA's Office of General Counsel, would receive the request and any notice of appeal, and the CRO, rather than FINRA's NAC, would carry out the proposed appellate process.[34]

Proposed NYSE Rule 9700 Series

FINRA's Rule 9700 Series provides redress for persons aggrieved by the operations of any automated quotation, execution, or communication system owned or operated by FINRA. As this would be inapplicable to the Exchange, the Exchange proposes to designate the proposed NYSE Rule 9700 Series as reserved to maintain consistency with FINRA's rule numbering conventions. The Exchange notes that under current NYSE Rule 18, if a member organization suffers a loss related to an Exchange system failure, it can submit a claim pursuant to that rule.

Proposed NYSE Rule 9800 Series

The Exchange proposes to adopt a new NYSE Rule 9800 Series to set forth procedures for issuing temporary cease and desist orders.

The proposed rule text would be substantially the same as that in FINRA's Rule 9800 Series, except for conforming and technical amendments and except that the Exchange's CRO, rather than FINRA's CEO, would authorize the initiation of temporary cease and desist proceedings and the initiation of suspension or cancellation proceedings for a violation of a temporary cease and desist order.

III. Discussion

After careful review, the Commission finds that the proposed rule change is consistent with the requirements of the Act.[35] The Commission believes that the proposed rule change is consistent with Section 6(b) of the Act,[36] in general, and furthers the objectives of Section 6(b)(5) of the Act,[37] in particular, in that it is designed to prevent fraudulent and manipulative acts and practices, to promote just and equitable principles of trade, to foster cooperation and coordination with persons engaged in facilitating transactions in securities, and to remove impediments to and perfect the mechanism of a free and open market and a national market system. In addition, the Commission believes that the proposed rule furthers the objectives of Section 6(b)(7) of the Act,[38] in that it provides fair procedures for the disciplining of members and persons associated with members, the denial of membership to any person seeking membership therein, the barring of any person from becoming associated with a member thereof, and the prohibition or limitation by the Exchange of any person with respect to access to services offered by the Exchange or a member thereof. In addition, the Commission believes that the proposed rule change furthers the objectives of Section 6(b)(3) of the Act,[39] in that it supports the fair representation of members in the administration of the Exchange's affairs.

The Commission believes that it is consistent with the Act for NYSE to adopt FINRA's disciplinary rules, which have previously been approved by the Commission.[40] According to the Exchange, most of its member organizations are members of FINRA and as such are already subject to the FINRA Rule 8000 Series and Rule 9000 Series.[41] Moreover, FINRA already administers much of the disciplinary process for NYSE under both its 17d–2 Agreement with NYSE and the RSA.[42] As noted above, since June 14, 2010, FINRA has been performing all enforcement-related regulatory services on behalf of NYSER, including disciplinary proceedings relating to NYSE-only rules or against both dual members and non-FINRA members. Further, according to the Exchange, those member organizations that are not members of FINRA are members of The NASDAQ Stock Market (''Nasdaq''), which has disciplinary rules that are similar to FINRA's rules.[43] Thus, all Exchange members, by virtue of their membership either in FINRA or Nasdaq, are already complying with the FINRA rules described herein. Accordingly, the

[34] Currently, the FINRA Rule 9600 Series also permits FINRA members to seek exemptive relief from other rules—NASD Rules 1021, 1050, 1070, 2210, 2340, 3010(b)(2), or 3150, or FINRA Rules 2114, 2310, 2359, 2360, 4210, 4320, 5110, 5121, 5122, 5130, 6183, 6625, 6731, 7470, 8213, 11870, or 11900, or Municipal Securities Rulemaking Board Rule G–37. If NYSE adopts similar rules in the future as part of the rules harmonization project, it will consider permitting member organizations to seek exemptive relief through the NYSE Rule 9600 Series.

[35] In approving this proposed rule change, the Commission has considered the proposed rule's impact on efficiency, competition, and capital formation. *See* 15 U.S.C. 78c(f).

[36] 15 U.S.C. 78f(b).

[37] 15 U.S.C. 78f(b)(5).

[38] 15 U.S.C. 78f(b)(7).

[39] 15 U.S.C. 78f(b)(3).

[40] *See* Order Approving Proposed Rule Change Relating to the Adoption of NASD Rules 4000 through 10000 Series and the 12000 through 14000 Series as FINRA Rules in the New Consolidated FINRA Rulebook, Securities Exchange Act Release No. 58643 (September 25, 2008), 73 FR 57174 (October 1, 2008) (''Order Adopting NASD Rules'').

[41] *See* Notice, *supra* note 3, 78 FR at 5214..

[42] *See supra* notes 4 and 6 and accompanying text.

[43] *See* Notice of Filing and Immediate Effectiveness of Proposed Rule Change to Adopt Certain FINRA Rules Relating to Trading Halts and Disclosure of Disciplinary Information, Securities Exchange Act Release No. 56204 (August 3, 2007), 72 FR 45288 (August 13, 2007) (''To ensure that FINRA members did not incur significant regulatory burdens as a result of Nasdaq separating from FINRA and registering as a national securities exchange, Nasdaq based its rules governing regulatory standards and disciplinary processes on FINRA rules, to a significant extent.'').

proposed changes will provide greater harmonization between Exchange and FINRA rules of similar purpose, such that dual members will be subject to more consistent rules which should eliminate confusion potentially resulting from differing procedures and requirements. As such, the Commission believes the proposed rule change will foster cooperation and coordination with persons engaged in facilitating transactions in securities and will remove impediments to and perfect the mechanism of a free and open market and a national market system.

The Commission also believes that it is consistent with the Act for NYSE to retain some of its current procedures. For example, NYSE would retain its appeals process and the use of NYSE Panelists; codify its notice provision in Rule 8313 governing how it releases its disciplinary decisions; and limit the use of fines, in proposed Rule 8320. The Commission notes that the Act requires that the rules of an exchange provide, in part, a ''fair procedure for the disciplining of members and persons associated with members.'' [44] The Act, however, does not dictate what those procedures should be and therefore, exchanges are not required by the Act to follow one process. The Commission notes that proposed NYSE Rule 9310, Review by Exchange Board of Directors, merely codifies the Exchange's current appeals process under NYSE Rule 476(f) and (l) into NYSE's proposed rules. Similarly, the Commission also believes that it is consistent with the Act for the Exchange to retain its current selection process for Hearing Panelists. According to the Exchange, Hearing Panelists cannot be drawn solely from a pool of FINRA members and associated persons, but rather must include NYSE-only member organizations and persons with experience in NYSE Floor matters in order for the Exchange's members to have a fair representation in its affairs.[45] Finally, the Commission also believes that it is consistent with the Act for the Exchange to codify its policy regarding the publication of disciplinary decisions and to limit the use of proceeds from fines and other monetary sanctions. The Commission notes with respect to publishing disciplinary decisions, that proposed Rule 8313 would require the Exchange to publish all final disciplinary actions other than minor rule violations, and is therefore, non-discriminatory and non-discretionary. Further, the Commission believes that not allowing monies from fines and sanctions to be used for general corporate purposes is consistent with the Commission's prior order regarding the use of such monies.[46]

The Commission also believes that it is consistent with the Act for the Exchange to modify FINRA's Rule 9268 to reflect that the Exchange has member affiliates. With regard to proposed Rule 9268, the Commission believes that it is appropriate that a disciplinary decision concerning an affiliate of the Exchange not be subject to review by the Exchange Board of Directors, but instead be treated as final action subject to review by the Commission. The Commission notes that Nasdaq, which also has a member affiliate, has a rule that is substantially the same as the Exchange's proposed rule.[47] In approving Nasdaq's rule, the Commission determined that such a rule would insulate Nasdaq's role as a SRO from its commercial interests.[48] Similarly, the Commission believes that NYSE's rule is designed to protect the integrity of the disciplinary process and is consistent with the Act.

The Commission also notes that in certain instances the Exchange has replaced FINRA's General Counsel or Chief Executive Officer with the Exchange's CRO, as well as replaced FINRA's NAC with its Chief Hearing Officer.[49] The Commission believes that this is consistent with the Act and that these changes reflect that FINRA is providing services to a separate SRO. The Exchange believes that its CRO is better suited to resolving certain procedural matters and rendering certain decisions under the proposed rule change, because the Exchange's CRO would have greater familiarity with the Exchange's rules and membership.[50] Moreover, the Exchange has represented that the CRO is independent of the Department of Member Regulation and as such can provide an appropriate review.[51] The Exchange also believes that it is appropriate for FINRA's Chief Hearing Officer, in lieu of the NAC or the Exchange Board of Directors, to review certain decisions, such as exclusions from a hearing or conference, since the Exchange Board of Directors does not currently review such decisions.[52]

The Commission believes that it is consistent with the Act for NYSE to modify its proposed rules in a way that is neither its current practice nor FINRA's rules. The Exchange does so for procedures relating to AWCs pursuant to proposed NYSE Rule 9216 and settlements pursuant to proposed NYSE Rule 9270. The Commission believes that the proposed processes for settling disciplinary are fair and reasonable. Although by adopting proposed NYSE Rule 9216 the Exchange would be changing the type of review associated with settlement procedures, the Commission believes that the proposed process provides appropriate controls to assure consistency and protect against aberrant settlements. Specifically, FINRA's Office of Disciplinary Affairs, which is an independent body from FINRA's Department of Enforcement,[53] would be reviewing all proposed AWCs or minor rule violation plan letters. Accordingly, FINRA's Office of Disciplinary Affairs would serve the role currently being performed by a Hearing Officer under NYSE rules to review a proposed settlement. Similarly, the Office of Disciplinary Affairs would be reviewing any uncontested offers of settlement before a hearing pursuant to proposed NYSE Rule 9270.[54] If the parties are unable to reach an agreement on settlement, the matter would proceed under the proposed 9200 Series and the processes provided therein.

Finally, the Commission believes that it is consistent with the Act for the Exchange to retain its list of minor rule violations, which have been approved by the Commission,[55] with certain technical and conforming amendments, while adopting FINRA's minor rule violation fine levels and process for imposing them, which also have been approved by the Commission.[56]

[44] *See* Section 6(b)(7), 15 U.S.C. 78f(b)(7).

[45] *See* Notice, *supra* note 3, 78 FR at 5235.

[46] *See* Order Granting Approval of Proposed Rule Change Relating to NYSE Regulation, Inc. Policies Regarding Exercise of Power To Fine NYSE Member Organizations and Use of Money Collected as Fines, Securities Exchange Act Release No. 55216 (January 31, 2007), 72 FR 5779 (February 7, 2007) (finding that limitation on the uses of fines to be consistent with Section 6 of the Act in order to guard against the possibility that fines may be assessed to respond to budgetary needs rather than to serve a disciplinary purpose). Unlike FINRA, the Exchange is a publicly traded company.

[47] *See* Nasdaq Rule 9268(e)(2).

[48] *See* Order Granting Approval of Proposed Rule Change as Amended by Amendment No. 1 Regarding Restrictions on Affiliations between Nasdaq and its Members, Securities Exchange Act Release No. 54170 (July 18, 2006), 71 FR 42149 (July 25, 2006).

[49] *See e.g.,* proposed NYSE Rules 9523, 9556, and 9280.

[50] *See* Notice, *supra* note 3, 78 FR at 5235.

[51] *See id.* at 5231.

[52] *See id.* at 5330.

[53] *See* FINRA Regulatory Notice 09–17.

[54] A Hearing Panel or Extended Hearing Panel would have to accept or reject an uncontested offer of settlement after a hearing has begun. *See* proposed NYSE Rule 9270(f).

[55] The most recent amendments to the Exchange's minor rule violation plan were approved in Securities Exchange Act Release No. 66758 (April 6, 2012), 77 FR 22032 (April 12, 2012) (SR–NYSE–2012–05).

[56] *See* Order Adopting NASD Rules, *supra* note 40.

IV. Conclusion

It is therefore ordered, pursuant to Section 19(b)(2) of the Act,[57] that the proposed rule change (SR–NYSE–2013–02) be, and it hereby is, approved.

For the Commission, by the Division of Trading and Markets, pursuant to delegated authority.[58]

Kevin M. O'Neill,

Deputy Secretary.

[FR Doc. 2013–05539 Filed 3–8–13; 8:45 am]

BILLING CODE 8011–01–P

[57] 15 U.S.C. 78s(b)(2).

[58] 17 CFR 200.30–3(a)(12).

SECURITIES AND EXCHANGE COMMISSION

[File No. 500–1]

Xytos, Inc.; Order of Suspension of Trading

March 6, 2013.

It appears to the Securities and Exchange Commission that there is a lack of current and accurate information concerning the securities of Xytos, Inc. (''Xytos'') because of questions regarding the adequacy and accuracy of information Xytos publicly disseminates concerning the company's financial conditions and business operations, and because of potentially manipulative conduct in the trading of Xytos shares.

The Commission is of the opinion that the public interest and the protection of investors require a suspension of trading in the securities of the above-listed company.

Therefore, it is ordered, pursuant to Section 12(k) of the Securities Exchange Act of 1934, that trading in the securities of the above-listed company is suspended for the period from 9:30 a.m. EST on March 6, 2013 through 11:59 p.m. EDT on March 19, 2013.

By the Commission.

Lynn M. Powalski,

Deputy Secretary.

[FR Doc. 2013–05567 Filed 3–7–13; 11:15 am]

BILLING CODE 8011–01–P

SMALL BUSINESS ADMINISTRATION

Data Collection Available for Public Comments

ACTION: 60 Day Notice and request for comments.

SUMMARY: In accordance with the Paperwork Reduction Act of 1995, this notice announces the Small Business Administration's intentions to request approval on a new and/or currently approved information collection.

DATES: Submit comments on or before May 10, 2013.

ADDRESSES: Send all comments regarding whether this information collection is necessary for the proper performance of the function of the agency, whether the burden estimates are accurate, and if there are ways to minimize the estimated burden and enhance the quality of the collections, to Carol Fendler, System Accountant, Office of Investment, Small Business Administration, 409 3rd Street, 6th Floor, Washington, DC 20416.

FOR FURTHER INFORMATION CONTACT: Carol Fendler, System Accountant, 202–205–7559 *carol.fendler@sba.gov* Curtis B. Rich, Management Analyst, 202–205–7030 *curtis.rich@sba.gov.*

SUPPLEMENTARY INFORMATION:

Title: ''SBIC Management Questionnaire & License Application; Exhibits to SBIC License Application/ Management Assessment Questionnaire''

Abstract: SBA Forms 2181, 2182 and 2183 provide SBA with the necessary information to make informed and proper decisions regarding the approval or denial of an applicant for a small business investment company (SBIC) license. SBA uses this information to assess an applicant's ability to successfully operate an SBIC within the scope of the Small Business Investment Act, as amended.

Description of Respondents: Small Business Owners and Farmers.

Form Numbers: 2181, 2182, 2183.

Annual Responses: 425.

Annual Burden: 7,167.

Curtis Rich,

Management Analyst.

[FR Doc. 2013–05542 Filed 3–8–13; 8:45 am]

BILLING CODE P

SUSQUEHANNA RIVER BASIN COMMISSION

Projects Approved for Consumptive Uses of Water

AGENCY: Susquehanna River Basin Commission.

ACTION: Notice.

SUMMARY: This notice lists the projects approved by rule by the Susquehanna River Basin Commission during the period set forth in **DATES**.

DATES: January 1 through January 31, 2013

ADDRESSES: Susquehanna River Basin Commission, 1721 North Front Street, Harrisburg, PA 17102–2391.

FOR FURTHER INFORMATION CONTACT: Richard A. Cairo, General Counsel, telephone: (717) 238–0423, ext. 306; fax: (717) 238–2436; email: *rcairo@srbc.net.* Regular mail inquiries may be sent to the above address.

SUPPLEMENTARY INFORMATION: This notice lists the projects, described below, receiving approval for the consumptive use of water pursuant to the Commission's approval by rule process set forth in 18 CFR § 806.22(e) and § 806.22(f) for the time period specified above:

Approvals by Rule Issued Under 18 CFR 806.22(e)

1. Moxie Energy, LLC, Moxie Patriot, LLC Facility, ABR–201301006, Clinton Township, Lycoming County, Pa.; Consumptive Use of Up to 0.060 mgd; Approval Date: January 18, 2013.
2. Moxie Energy, LLC, Moxie Liberty, LLC Facility, ABR–201301007, Asylum Township, Bradford County, Pa.; Consumptive Use of Up to 0.060 mgd; Approval Date: January 18, 2013.

Approvals by Rule Issued Under 18 CFR 806.22(f)

1. EOG Resources, Inc., Pad ID: HARKNESS C Pad, ABR–201301001, Smithfield Township, Bradford County, Pa.; Consumptive Use of Up to 5.000 mgd; Approval Date: January 7, 2013.
2. EOG Resources, Inc., Pad ID: HOPPAUGH C Pad, ABR–201301002, Springfield Township, Bradford County, Pa.; Consumptive Use of Up to 5.000 mgd; Approval Date: January 7, 2013.
3. Chief Oil & Gas LLC, Pad ID: Cochran Drilling Pad, ABR–201301003, West Burlington Township, Bradford County, Pa.; Consumptive Use of Up to 2.000 mgd; Approval Date: January 11, 2013.
4. Pennsylvania General Energy Company, LLC, Pad ID: COP Tract 322 Pad A, ABR–201301004, Cummings Township, Lycoming County, Pa.; Consumptive Use of Up to 3.500 mgd; Approval Date: January 11, 2013.
5. Pennsylvania General Energy Company, LLC, Pad ID: COP Tract 322 Pad B, ABR–201301005, Cummings Township, Lycoming County, Pa.; Consumptive Use of Up to 3.500 mgd; Approval Date: January 11, 2013.
6. Range Resources—Appalachia, LLC, Pad ID: Grays Run 6H–10H, ABR–201301008, McIntyre Township, Lycoming County, Pa.; Consumptive Use of Up to 5.000 mgd; Approval Date: January 25, 2013.
7. Chesapeake Appalachia, LLC, Pad ID: Three D Acres, ABR–201301009, Monroe Township, Bradford County, Pa.; Consumptive Use of Up to 7.500 mgd; Approval Date: January 25, 2013.

8. Southwestern Energy Production Company, Pad ID: WALKER WEST PAD 14, ABR–201301010, Jackson Township, Susquehanna County, Pa.; Consumptive Use of Up to 4.999 mgd; Approval Date: January 25, 2013.

9. WPX Energy Appalachia, LLC, Pad ID: Buxbaum Well Pad, ABR–201301011, Franklin Township, Susquehanna County, Pa.; Consumptive Use of Up to 4.000 mgd: Approval Date: January 25, 2013.

10. Chesapeake Appalachia, LLC, Pad ID: Alvarez, ABR–201301012, Wilmot and Windham Townships, Bradford and Windham Counties, Pa.; Consumptive Use of Up to 7.500 mgd; Approval Date: January 25, 2013.

11. Seneca Resources, Pad ID: DCNR 100 Pad T, ABR–201301013, Lewis Township, Lycoming County, Pa.; Consumptive Use of Up to 4.000 mgd; Approval Date: January 30, 2013.

12. Chesapeake Appalachia, LLC, Pad ID: Finan, ABR–201301014, Wilmot Township, Bradford County, Pa.; Consumptive Use of Up to 7.500 mgd; Approval Date: January 30, 2013.

13. Chesapeake Appalachia, LLC, Pad ID: Outback, ABR–201301015, Elkland Township, Sullivan County, Pa.; Consumptive Use of Up to 7.500 mgd; Approval Date: January 30, 2013.

14. Chesapeake Appalachia, LLC, Pad ID: Rosiemar, ABR–201301016, Auburn Township, Susquehanna County, Pa.; Consumptive Use of Up to 7.500 mgd; Approval Date: January 30, 2013.

15. Cabot Oil & Gas Corporation, Pad ID: KropaT P1, ABR–201301017, Springville Township, Susquehanna County, Pa.; Consumptive Use of Up to 3.575 mgd; Approval Date: January 30, 2013.

Authority: Pub. L. 91–575, 84 Stat. 1509 *et seq.,* 18 CFR parts 806, 807, and 808.

Dated: February 25, 2013.

Stephanie L. Richardson,

Secretary to the Commission.

[FR Doc. 2013–05512 Filed 3–8–13; 8:45 am]

BILLING CODE 7040–01–P

DEPARTMENT OF THE TREASURY

Office of the Comptroller of the Currency

Agency Information Collection Activities; Proposed Collection; Comment Request; Company-Run Annual Stress Test Reporting Template and Documentation for Covered Institutions With Total Consolidated Assets of $10 Billion to $50 Billion Under the Dodd-Frank Wall Street Reform and Consumer Protection Act

AGENCY: Office of the Comptroller of the Currency, Treasury (OCC).

ACTION: Notice.

SUMMARY: The OCC, as part of its continuing effort to reduce paperwork and respondent burden, invites the general public and other Federal agencies to comment on this continuing information collection, as required by the Paperwork Reduction Act of 1995. Under the Paperwork Reduction Act, Federal agencies are required to publish notice in the **Federal Register** concerning each proposed collection of information and to allow 60 days for public comment in response to the notice. An agency may not conduct or sponsor, and a respondent is not required to respond to, an information collection unless it displays a currently valid Office of Management and Budget (OMB) control number.

The OCC is soliciting comment on a proposed new regulatory reporting requirement for national banks and Federal savings associations titled, ''Company-Run Annual Stress Test Reporting Template and Documentation for Covered Institutions with Total Consolidated Assets of $10 Billion to $50 Billion under the Dodd-Frank Wall Street Reform and Consumer Protection Act.'' The proposal describes the scope of reporting and the proposed reporting requirements.

DATES: Comments must be received by May 10, 2013.

ADDRESSES: Because paper mail in the Washington, DC area and at the OCC is subject to delay, commenters are encouraged to submit comments by email if possible. Comments may be sent to: Legislative and Regulatory Activities Division, Office of the Comptroller of the Currency, Attention: 1557–0311, 400 7th Street SW., Suite 3E–218, Mail Stop 9W–11, Washington, DC 20219. In addition, comments may be sent by fax to (571) 465–4326 or by electronic mail to *regs.comments@occ.treas.gov*. You may personally inspect and photocopy comments at the OCC, 400 7th Street SW., Washington, DC 20219. For security reasons, the OCC requires that visitors make an appointment to inspect comments. You may do so by calling (202) 649–6700. Upon arrival, visitors will be required to present valid government-issued photo identification and to submit to security screening in order to inspect and photocopy comments.

All comments received, including attachments and other supporting materials, are part of the public record and subject to public disclosure. Do not enclose any information in your comment or supporting materials that you consider confidential or inappropriate for public disclosure.

FOR FURTHER INFORMATION CONTACT: You can request additional information from or a copy of the collection from Johnny Vilela or Mary H. Gottlieb, Clearance Officers, (202) 649–5490, Legislative and Regulatory Activities Division, Office of the Comptroller of the Currency, 400 7th Street SW., Suite 3E–218, Mail Stop 9W–11, Washington, DC 20219. In addition, copies of the templates referenced in this notice can be found on the OCC's Web site under Tools and Forms *(http://www.occ.gov/tools-forms/forms/bank-operations/stress-test-reporting.html).*

SUPPLEMENTARY INFORMATION: The OCC is requesting comment on the following new proposed information collection:

Title: Company-Run Annual Stress Test Reporting Template and Documentation for Covered Institutions with Total Consolidated Assets of $10 Billion to $50 Billion under the Dodd-Frank Wall Street Reform and Consumer Protection Act.

OMB Control No.: 1557–0311.

Description: Section 165(i)(2) of the Dodd-Frank Wall Street Reform and Consumer Protection Act [1] (Dodd-Frank Act) requires certain financial companies, including national banks and Federal savings associations, to conduct annual stress tests [2] and requires the primary financial regulatory agency [3] of those financial companies to issue regulations implementing the stress test requirements.[4] A national bank or Federal savings association is a ''covered institution,'' and therefore subject to the stress test requirements if its total consolidated assets exceed $10 billion. Under section 165(i)(2), a covered institution is required to submit to the Board of Governors of the Federal Reserve System (Board) and to its

[1] Public Law 111–203, 124 Stat. 1376, July 2010.

[2] 12 U.S.C. 5365(i)(2)(A).

[3] 12 U.S.C. 5301(12).

[4] 12 U.S.C. 5365(i)(2)(C).

primary financial regulatory agency a report at such time, in such form, and containing such information as the primary financial regulatory agency may require.[5] On October 9, 2012, the OCC published in the **Federal Register** a final rule implementing the section 165(i)(2) annual stress test requirements.[6] This notice describes the reports and information required to meet the reporting requirements under section 165(i)(2) for covered institutions with average total consolidated assets between $10 and $50 billion. These information collections will be given confidential treatment (5 U.S.C. 552(b)(4)).

The OCC intends to use the data collected through this proposal to assess the reasonableness of the stress test results of covered institutions and to provide forward-looking information to the OCC regarding a covered institution's capital adequacy. The OCC also may use the results of the stress tests to determine whether additional analytical techniques and exercises could be appropriate to identify, measure, and monitor risks at the covered institution. The stress test results are expected to support ongoing improvement in a covered institution's stress testing practices with respect to its internal assessments of capital adequacy and overall capital planning.

The Dodd-Frank Act stress testing requirements apply to all covered institutions, but the OCC recognizes that many covered institutions with consolidated total assets of $50 billion or more have been subject to existing stress testing requirements under the Board's Comprehensive Capital Analysis and Review (CCAR). The OCC also recognizes that these institutions' stress tests will be applied to more complex portfolios and therefore warrant a broader set of reports to adequately capture the results of the company-run stress tests. These reports necessarily will require more detail than would be appropriate for smaller, less complex institutions. Therefore, the OCC has decided to specify separate reporting templates for covered institutions with total consolidated assets between $10 and $50 billion and for covered institutions with total consolidated assets of $50 billion or more.[7]

While the general reporting categories are the same (income statement, balance sheet and capital), the level of granularity for individual reporting items is less for $10 to $50 billion institutions. For example, accounting for provisions by category is not required, and less detail is required for commercial and industrial lending. Because smaller banks with assets of $10 to $50 billion generally have less complex balance sheets, the OCC believes that highly detailed reporting is not warranted, and so the OCC is not requiring supplemental schedules on such areas as retail balances, securities and trading, operational risk, and pre-provision net revenue (PPNR). However, where a covered institution with assets less than $50 billion is affiliated with an organization with assets of $50 billion or more, the OCC reserves the authority to require the smaller covered institution to use the reporting template for larger institutions.

The OCC has worked closely with the Board and the Federal Deposit Insurance Corporation (FDIC) to make the agencies' respective rules implementing the annual stress testing requirements under the Dodd-Frank Act consistent and comparable by requiring similar standards for scope of application, scenarios, data collection and reporting forms. The OCC also has worked to minimize any potential duplication of effort related to the annual stress test requirements. The reporting templates for institutions with assets of $10 to $50 billion are described below.

Description of Reporting Results Templates for Institutions With $10 Billion to $50 Billion in Assets

The ''Dodd-Frank Annual Stress Test Reporting Results Template for Covered Institutions with Total Consolidated Assets Between $10 and $50 Billion'' ($10–$50B results template) includes data collection worksheets necessary for the OCC to assess the company-run stress test results for baseline, adverse and severely adverse scenarios as well as any other scenario specified in accordance with regulations issued by the OCC. The $10–$50B results template includes worksheets that collect information on the following areas:

1. Income Statement;
2. Balance Sheet; and,
3. Capital.

Each $10 to $50 billion covered institution reporting to the OCC using this form will be required to submit to the OCC worksheets for each scenario provided to covered institutions in accordance with regulations implementing Section 165(i)(2) as specified by the OCC.

Worksheets: Income Statement

The income statement worksheet collects data for the quarter preceding the planning horizon and for each quarter of the planning horizon for the stress test on projected losses and revenues in the following categories:

1. Net charge-offs
2. Pre-provision net revenue
3. Provision for loan and lease losses
4. Realized gains (losses) on held to maturity (HTM) and available-for-sale (AFS) securities
5. All other gains (losses)
6. Taxes

Memoranda items:

7. Net gains and losses on sales of other real estate owned
8. Total other than temporary impairment (OTTI) losses

This schedule provides information used to assess losses and revenues that covered institutions can sustain in baseline, adverse and severely adverse stress scenarios.

Worksheets: Balance Sheet

The balance sheet worksheet collects data for the quarter preceding the planning horizon and for each quarter of the planning horizon for the stress test on projected equity capital, as well as on assets and liabilities in the following categories:

1. Loans
2. HTM securities
3. AFS securities
4. Trading assets
5. Total intangible assets
6. Other real estate
7. All other assets

Memoranda items:

8. Loans and leases guaranteed by other U.S. government or GSE guarantees (non-FDIC loss-sharing agreements)
9. Troubled debt restructurings
10. Loans secured by 1–4 family properties in foreclosure
11. Retail funding (core deposits)
12. Wholesale funding
13. Trading liabilities
14. All other liabilities
15. Perpetual preferred stock and related surplus
16. Common stock
17. Surplus
18. Retained earnings
19. Other equity capital components
20. Memoranda items: Average rates for loans, securities, retail funding, wholesale funding, interest-bearing deposits, trading and other liabilities.

The OCC intends to use this worksheet to assess the projected

[5] 12 U.S.C. 5365(i)(2)(B).

[6] 77 FR 61238, October 9, 2012.

[7] *See* 77 FR 49485 for the Paperwork Reduction Act Notice and the OCC Web site at *http://occ.gov/news-issuances/news-releases/2012/nr-occ-2012-121.html* for the reporting templates for covered institutions with total consolidated assets of $50 billion or more.

changes in assets and liabilities that a covered institution can sustain in an adverse and severely adverse stress scenario. This worksheet will also be used to assess the revenue and loss projections identified in the income statement worksheet.

Worksheets: Capital

The capital worksheet, which is appended to the Balance Sheet, collects data for the quarter preceding the planning horizon and for each quarter of the planning horizon for the stress test on the following areas:

1. Unrealized gains (losses) on AFS securities
2. Disallowed deferred tax asset
3. Tier 1 common capital elements
4. Tier 1 capital
5. Tier 2 capital
6. Total risk-based capital
7. Total capital
8. Risk-weighted assets
9. Total assets for leverage purposes
10. Tier 1 common equity ratio
11. Tier 1 risk-based capital ratio
12. Tier 1 leverage ratio
13. Total risk-based capital ratio

Memoranda:

14. Sale, conversion, acquisition or retirement of capital stock
15. Cash dividends declared on preferred stock
16. Cash dividends declared on common stock

Additionally, the Summary Schedule captures projections for regulatory capital ratios over the planning horizon by scenario.

The OCC intends to use these worksheets to assess the impact on capital of the projected losses and projected changes in assets that the covered institution can sustain in a stressed scenario. In addition to reviewing the worksheet in the context of the balance sheet and income statement projections, the OCC also intends to use this worksheet in assessing capital plans and the capital planning processes for each covered institution.

Description of DFAST Scenario Variables Template

To conduct the stress test required under this rule, a covered institution may need to project additional economic and financial variables to estimate losses or revenues for some or all of its portfolios. In such a case, the covered institution is required to complete the DFAST Scenario Variables worksheet for each scenario where such additional variables are used to conduct the stress test. Each scenario worksheet collects the variable name (matching that reported on the Scenario Variable Definitions worksheet), the actual value of the variable during the third quarter of the reporting year, and the projected value of the variable for nine future quarters.

Description of Supporting Documentation

Covered institutions must submit clear documentation in support of the projections included in the worksheets to support efficient and timely review of annual stress test results by the OCC. The supporting documentation should be submitted electronically and is not expected to be reported in the workbooks used for required data reporting. This supporting documentation must describe the types of risks included in the stress test; describe clearly the methodology used to produce the stress test projections; describe the methods used to translate the macroeconomic factors into a covered institution's projections; and also include an explanation of the most significant causes for the changes in regulatory capital ratios. The supporting documentation also should address the impact of anticipated corporate events, including mergers, acquisitions or divestitures of business lines or entities, and changes in strategic direction, and should describe how such changes are reflected in stress test results, including the impact on estimates of losses, expenses and revenues, net interest margins, non-interest income items, and balance sheet amounts.

Where company-specific assumptions are made that differ from the broad macroeconomic assumptions incorporated in stress scenarios provided by the OCC, the documentation also must describe such assumptions and how those assumptions relate to reported projections. Where historical relationships are relied upon, the covered institutions must describe the historical data and provide the basis for the expectation that these relationships would be maintained in each scenario, particularly under adverse and severely adverse conditions.

Type of Review: Revision to an existing collection.

Affected Public: Businesses or other for-profit.

Estimated Number of Respondents: 26.

Estimated Total Annual Burden: 12,064 hours.

The burden for each $10 to $50 billion covered institution that completes the $10-$50B results template is estimated to be 440 hours for a total of 11,440 hours. This burden includes 20 hours to input these data and 420 hours for work related to modeling efforts. The estimated burden for each $10 to $50 billion covered institution that completes the annual DFAST Scenarios Variables Template is estimated to be 24 hours for a total of 624 hours. Start up costs for new respondents are estimated to be 93,600 hours and ongoing revisions for existing firms, 4,160 hours.

Comments submitted in response to this notice will be summarized and included in the request for OMB approval. All comments will become a matter of public record. Comments are invited on:

(a) Whether the collection of information is necessary for the proper performance of the functions of the OCC, including whether the information has practical utility;

(b) The accuracy of the OCC's estimate of the burden of the collection of information;

(c) Ways to enhance the quality, utility, and clarity of the information to be collected;

(d) Ways to minimize the burden of the collection on respondents, including through the use of automated collection techniques or other forms of information technology; and,

(e) Estimates of capital or start-up costs and costs of operation, maintenance, and purchase of services to provide information.

Dated: March 4, 2013.

Michele Meyer,

Assistant Director, Legislative and Regulatory Activities Division.

[FR Doc. 2013–05448 Filed 3–8–13; 8:45 am]

BILLING CODE 4810–33–P

DEPARTMENT OF THE TREASURY

Internal Revenue Service

Proposed Collection; Comment Request for Form 706–A

AGENCY: Internal Revenue Service (IRS), Treasury.

ACTION: Notice and request for comments.

SUMMARY: The Department of the Treasury, as part of its continuing effort to reduce paperwork and respondent burden, invites the general public and other Federal agencies to take this opportunity to comment on proposed and/or continuing information collections, as required by the Paperwork Reduction Act of 1995, Public Law 104–13 (44 U.S.C. 3506(c)(2)(A)). Currently, the IRS is soliciting comments concerning Form

706–A, United States Additional Estate Tax Return.

DATES: Written comments should be received on or before May 10, 2013 to be assured of consideration.

ADDRESSES: Direct all written comments to Yvette Lawrence, Internal Revenue Service, Room 6129, 1111 Constitution Avenue NW., Washington, DC 20224.

FOR FURTHER INFORMATION CONTACT: Requests for additional information or copies of the form and instructions should be directed to Allan Hopkins, (202) 622–6665, at Internal Revenue Service, Room 6129, 1111 Constitution Avenue NW., Washington, DC 20224, or through the internet at *Allan.M.Hopkins@irs.gov.*

SUPPLEMENTARY INFORMATION:

Title: United States Additional Estate Tax Return.

OMB Number: 1545–0016.

Form Number: Form 706–A.

Abstract: Form 706–A is used by individuals to compute and pay the additional estate taxes due under Code section 2032A(c). IRS uses the information to determine that the taxes have been properly computed. The form is also used for the basis election of section 1016(c)(1).

Current Actions: There were no changes made to the document that resulted in any change to the burden previously reported to OMB. We are making this submission to renew the OMB approval.

Type of Review: Extension to previously approved collection.

Affected Public: Individuals or households.

Estimated Number of Respondents: 180.

Estimated Time per Respondent: 9 hours 19 minutes.

Estimated Total Annual Burden Hours: 1,678.

The following paragraph applies to all of the collections of information covered by this notice:

An agency may not conduct or sponsor, and a person is not required to respond to, a collection of information unless the collection of information displays a valid OMB control number.

Books or records relating to a collection of information must be retained as long as their contents may become material in the administration of any internal revenue law. Generally, tax returns and tax return information are confidential, as required by 26 U.S.C. 6103.

Request for Comments: Comments submitted in response to this notice will be summarized and/or included in the request for OMB approval. All comments will become a matter of public record. Comments are invited on: (a) Whether the collection of information is necessary for the proper performance of the functions of the agency, including whether the information shall have practical utility; (b) the accuracy of the agency's estimate of the burden of the collection of information; (c) ways to enhance the quality, utility, and clarity of the information to be collected; (d) ways to minimize the burden of the collection of information on respondents, including through the use of automated collection techniques or other forms of information technology; and (e) estimates of capital or start-up costs and costs of operation, maintenance, and purchase of services to provide information.

Approved: March 6, 2013.

Yvette Lawrence,

IRS Reports Clearance Officer.

[FR Doc. 2013–05517 Filed 3–8–13; 8:45 am]

BILLING CODE 4830–01–P

DEPARTMENT OF THE TREASURY

Internal Revenue Service

Proposed Collection; Comment Request for Revenue Procedure 2013–XX

AGENCY: Internal Revenue Service (IRS), Treasury.

ACTION: Notice and request for comments.

SUMMARY: The Department of the Treasury, as part of its continuing effort to reduce paperwork and respondent burden, invites the general public and other Federal agencies to take this opportunity to comment on proposed and/or continuing information collections, as required by the Paperwork Reduction Act of 1995, Public Law 104–13 (44 U.S.C. 3506(c)(2)(A)). Currently, the IRS is soliciting comments concerning Revenue Procedure 2013–XX, Disaster Relief.

DATES: Written comments should be received on or before May 10, 2013 to be assured of consideration.

ADDRESSES: Direct all written comments to Yvette Lawrence, Internal Revenue Service, Room 6129, 1111 Constitution Avenue NW., Washington, DC 20224.

FOR FURTHER INFORMATION CONTACT: Requests for additional information or copies of the form and instructions should be directed to Yvette Lawrence, (202) 622–6665, at Internal Revenue Service, Room 6129, 1111 Constitution Avenue NW., Washington, DC 20224, or through the internet at *Allan.M.Hopkins@irs.gov.*

SUPPLEMENTARY INFORMATION:

Title: Disaster Relief.

OMB Number: 1545–2237.

Form Number: Rev. Proc. 2013–XX.

Abstract: This revenue procedure establishes a procedure for temporary relief from certain requirements of § 42 of the Internal Revenue Code for owners of low-income buildings (Owners) and housing credit agencies of States or possessions of the United States (Agencies) affected by major disaster areas declared by the President under the Robert T. Stafford Disaster Relief and Emergency Assistance Act, 42 U.S.C. 5121 *et seq.* (Stafford Act).

Current Actions: There is no change in the paperwork burden previously approved by OMB. This form is being submitted for renewal purposes only.

Type of Review: Extension of a currently approved collection.

Affected Public: Individuals and Households.

Estimated Number of Respondents: 3,500.

Estimated Time per Respondent: 30 minutes.

Estimated Total Annual Burden Hours: 1,750.

The following paragraph applies to all of the collections of information covered by this notice:

An agency may not conduct or sponsor, and a person is not required to respond to, a collection of information unless the collection of information displays a valid OMB control number. Books or records relating to a collection of information must be retained as long as their contents may become material in the administration of any internal revenue law. Generally, tax returns and tax return information are confidential, as required by 26 U.S.C. 6103.

Request for Comments: Comments submitted in response to this notice will be summarized and/or included in the request for OMB approval. All comments will become a matter of public record. Comments are invited on: (a) Whether the collection of information is necessary for the proper performance of the functions of the agency, including whether the information shall have practical utility; (b) the accuracy of the agency's estimate of the burden of the collection of information; (c) ways to enhance the quality, utility, and clarity of the information to be collected; (d) ways to minimize the burden of the collection of information on respondents, including through the use of automated collection techniques or other forms of information technology; and (e) estimates of capital

or start-up costs and costs of operation, maintenance, and purchase of services to provide information.

Approved: March 5, 2013.

Yvette Lawrence,

IRS Reports Clearance Officer.

[FR Doc. 2013–05515 Filed 3–8–13; 8:45 am]

BILLING CODE 4830–01–P

DEPARTMENT OF THE TREASURY

Internal Revenue Service

Proposed Collection; Comment Request for Regulation Project

AGENCY: Internal Revenue Service (IRS), Treasury.

ACTION: Notice and request for comments.

SUMMARY: The Department of the Treasury, as part of its continuing effort to reduce paperwork and respondent burden, invites the general public and other Federal agencies to take this opportunity to comment on proposed and/or continuing information collections, as required by the Paperwork Reduction Act of 1995, Public Law 104–13 (44 U.S.C. 3506(c)(2)(A)). Currently, the IRS is soliciting comments concerning health insurance premium tax credit.

DATES: Written comments should be received on or before May 10, 2013 to be assured of consideration.

ADDRESSES: Direct all written comments to Yvette Lawrence, Internal Revenue Service, Room 6129, 1111 Constitution Avenue NW., Washington, DC 20224.

FOR FURTHER INFORMATION CONTACT: Requests for additional information or copies of the form and instructions should be directed to Allan Hopkins, (202) 622–6665, at Internal Revenue Service, Room 6129, 1111 Constitution Avenue NW., Washington, DC 20224, or through the Internet at *Allan.M.Hopkins@irs.gov.*

SUPPLEMENTARY INFORMATION:

Title: Health Insurance Premium Tax Credit.

OMB Number: 1545–2232.

Form Number: REG–131491–10.

Abstract: This document contains regulations relating to the health insurance premium assistance credit enacted by the Patient Protection and Affordable Care Act (PPACA). The regulations provide guidance to individuals who claim the premium assistance credit and exchanges that make qualified health plans available to individuals and.

Type of Review: Extension of a currently approved collection.

Affected Public: Businesses and other for-profit organizations.

Estimated Number of Respondents: 60.

Estimated Total Annual Burden Hours: 1.

The following paragraph applies to all of the collections of information covered by this notice:

An agency may not conduct or sponsor, and a person is not required to respond to, a collection of information unless the collection of information displays a valid OMB control number.

Books or records relating to a collection of information must be retained as long as their contents may become material in the administration of any internal revenue law. Generally, tax returns and tax return information are confidential, as required by 26 U.S.C. 6103.

Request for Comments: Comments submitted in response to this notice will be summarized and/or included in the request for OMB approval. All comments will become a matter of public record. Comments are invited on: (a) Whether the collection of information is necessary for the proper performance of the functions of the agency, including whether the information shall have practical utility; (b) the accuracy of the agency's estimate of the burden of the collection of information; (c) ways to enhance the quality, utility, and clarity of the information to be collected; (d) ways to minimize the burden of the collection of information on respondents, including through the use of automated collection techniques or other forms of information technology; and (e) estimates of capital or start-up costs and costs of operation, maintenance, and purchase of services to provide information.

Approved: March 5, 2013.

Yvette Lawrence,

IRS Reports Clearance Officer.

[FR Doc. 2013–05519 Filed 3–8–13; 8:45 am]

BILLING CODE 4830–01–P

DEPARTMENT OF THE TREASURY

Internal Revenue Service

Privacy Act of 1974, as Amended

AGENCY: Internal Revenue Service, Treasury.

ACTION: Notice of proposed alteration of a Privacy Act system of records.

SUMMARY: In accordance with the requirements of the Privacy Act of 1974, as amended, 5 U.S.C. 552a, the Department of the Treasury, Internal Revenue Service (IRS), gives notice of proposed alteration of the system of records entitled Treasury/IRS 34.037, Audit Trail and Security Records.

DATES: Comments must be received no later than April 10, 2013. The proposed altered system will become effective April 22, 2013, unless the IRS receives comments which cause reconsideration of this action.

ADDRESSES: Comments should be sent to the Office of Privacy, Governmental Liaison and Disclosure, Internal Revenue Service, 1111 Constitution Avenue NW., Washington, DC 20224. Comments will be available for inspection and copying in the IRS Freedom of Information Reading Room (Room 1621) at the above address. The telephone number for the Reading Room is (202) 622–5164 (not a toll-free number).

FOR FURTHER INFORMATION CONTACT: David Silverman, Management and Program Analyst, IRS Office of Privacy, Governmental Liaison and Disclosure, (202) 622–5625 (not a toll-free number).

SUPPLEMENTARY INFORMATION: The IRS is proposing to alter the Privacy Act system of records entitled Treasury/IRS34.037, Audit Trail and Security Records, to add records for the monitoring of electronic communications exiting IRS computer networks to detect sensitive but unclassified (SBU) information that is being transmitted in violation of IRS security policy (e.g., to ensure the information is secured by an adequate level of encryption). The monitoring will allow the IRS to comply with Office of Management and Budget (OMB) Mandates 6–16, 6–19 and 7–16, Treasury Mandate TCIO–M–09–04/S–SDP 6 & S–SDP 7, and Treasury Inspector General for Tax Administration (TIGTA) audit findings recommending such action.

The IRS will review detections of potential violations to determine whether there has been an actual violation of security policy. The records will include items such as suspected and actual policy violations, violation match count (volume), sender, recipient, computer network protocol, and the date and time of the suspected or actual violation.

Corrective action may be taken in accordance with established processes including but not limited to: notification of potential violation to employee and/or supervisor; retention of violation data for statistics and further evaluation; and corrective action according to established labor relations processes and policies.

A notice describing Treasury/IRS 34.037 was most recently published at

Volume 77, Number 155 (Friday, August 10, 2(12). The IRS proposes to alter the system of records to include these monitoring records.

TREASURY/IRS 34.037

SYSTEM NAME:

Audit Trail and Security Records—Treasury/IRS 34.037.

* * * * *

CATEGORIES OF INDIVIDUALS COVERED BY THE SYSTEM:

Description of changes: The categories of individuals will be altered to include IRS employees, contractors, and other individuals whose communications are monitored to detect violations of IRS security policies with electronic mail and to include individuals whose records were accessed.

When altered as proposed, the Categories of individuals covered by the system section will read as follows:

Individuals who have accessed, by any means, information contained within IRS electronic or paper records or who have otherwise used any IRS computing equipment/resources, including access to Internet sites; individuals whose information is accessed using IRS computing equipment/resources; and IRS employees and contractors who use IRS equipment to send electronic communications.

* * * * *

CATEGORIES OF RECORDS IN THE SYSTEM:

Description of changes: The Categories of records will be altered to include information about individuals who send electronic communications using IRS systems and other individuals who have or may have knowledge of such incidents, and to include records about individuals whose records were accessed.

When altered as proposed, the Categories of records in the system section will read as follows:

Records concerning the use of IRS computing equipment or other resources by employees, contractors, or other individuals to access IRS information; records concerning individuals whose information was accessed using IRS computing equipment/resources; records identifying what information was accessed; records concerning the use of IRS computing equipment and other resources to send electronic communications; and records concerning the investigation of such incidents.

* * * * *

PURPOSE:

Description of changes: The purpose of the system will be altered to include monitoring for security violations in addition to the current purpose of detecting unauthorized access.

When altered as proposed, the Purpose section will read as follows:

To identify and track any unauthorized accesses to SBU and potential breaches or unauthorized disclosures of such information or inappropriate use of government computers to access Internet sites for any purpose forbidden by IRS policy (e.g., gambling, playing computer games, or engaging in illegal activity), or to detect electronic communications sent using IRS systems in violation of IRS security policy.

* * * * *

RETRIEVABILITY:

Description of changes: The retrievability will be altered to add new identifiers used to retrieve information in the system.

When altered as proposed the retrievability section will read as follows:

By name, Social Security Number (SSN), or the employee identification number (SEID) of employee, contractor, or other individual who has been granted access to IRS information, or to IRS equipment and resources, and by incident number. Also by name, SSN or Taxpayer Identification Number (TIN) of entities whose records were accessed.

The report of the altered system of records, as required by 5 U.S.C. 552a(r) of the Privacy Act, has been submitted to the Committee on Oversight and Government Reform of the House of Representatives, the Committee on Homeland Security and Governmental Affairs of the Senate and the Office of Management and Budget.

Dated: February 22, 2013.

Veronica Marco,

Acting Deputy Assistant Secretary for Privacy, Transparency, and Records.

[FR Doc. 2013–05513 Filed 3–8–13; 8:45 am]

BILLING CODE 4830–01–P

FEDERAL REGISTER

Vol. 78 Monday,

No. 47 March 11, 2013

Part II

Department of Health and Human Services

45 CFR Parts 153, 155, 156, et al.

Patient Protection and Affordable Care Act; HHS Notice of Benefit and Payment Parameters for 2014 and Amendments to the HHS Notice of Benefit and Payment Parameters for 2014; Final Rules; Patient Protection and Affordable Care Act; Establishment of Exchanges and Qualified Health Plans; Small Business Health Options Program; Proposed Rule

DEPARTMENT OF HEALTH AND HUMAN SERVICES

45 CFR Parts 153, 155, 156, 157 and 158

[CMS–9964–F]

RIN 0938–AR51

Patient Protection and Affordable Care Act; HHS Notice of Benefit and Payment Parameters for 2014

AGENCY: Centers for Medicare & Medicaid Services (CMS), Department of Health and Human Services (HHS).

ACTION: Final rule.

SUMMARY: This final rule provides detail and parameters related to: the risk adjustment, reinsurance, and risk corridors programs; cost-sharing reductions; user fees for Federally-facilitated Exchanges; advance payments of the premium tax credit; the Federally-facilitated Small Business Health Option Program; and the medical loss ratio program. Cost-sharing reductions and advance payments of the premium tax credit, combined with new insurance market reforms, are expected to significantly increase the number of individuals with health insurance coverage, particularly in the individual market. In addition, we expect the premium stabilization programs—risk adjustment, reinsurance, and risk corridors—to protect against the effects of adverse selection. These programs, in combination with the medical loss ratio program and market reforms extending guaranteed availability (also known as guaranteed issue) and prohibiting the use of factors such as health status, medical history, gender, and industry of employment to set premium rates, will help to ensure that every American has access to high-quality, affordable health insurance.

DATES: This final rule is effective on April 30, 2013.

FOR FURTHER INFORMATION CONTACT:

Sharon Arnold, (301) 492–4286; Laurie McWright, (301) 492–4311; or Jeff Wu, (301) 492–4305, for general information.

Kelly Horney, (410) 786–0558, for matters related to the risk adjustment program generally.

Michael Cohen, (301) 492–4277, for matters related to the risk adjustment methodology and the methodology for determining the reinsurance contribution rate and payment parameters.

Adrianne Glasgow, (410) 786–0686, for matters related to the reinsurance program.

Jaya Ghildiyal, (301) 492–5149, for matters related to the risk corridors program and user fees for Federally-facilitated Exchanges.

Johanna Lauer, (301) 492–4397, for matters related to cost-sharing reductions and advance payments of the premium tax credit.

Bobbie Knickman, (410) 786–4161, for matters related to the distributed data collection approach for the HHS-operated risk adjustment and reinsurance programs.

Rex Cowdry, (301) 492–4387, for matters related to the Small Business Health Options Program.

Carol Jimenez, (301) 492–4457, for matters related to the medical loss ratio program.

SUPPLEMENTARY INFORMATION:

Table of Contents

I. Executive Summary
A. Purpose
B. Summary of Major Provisions
C. Costs and Benefits
II. Background
A. Premium Stabilization
B. Cost-Sharing Reductions
C. Advance Payments of the Premium Tax Credit
D. Exchanges
E. Market Reform Rules
F. Essential Health Benefits and Actuarial Value
G. Medical Loss Ratio
H. Tribal Consultation
III. Provisions of the Proposed Rule and Responses to Public Comments
A. Provisions for the State Notice of Benefit and Payment Parameters
B. Provisions and Parameters for the Permanent Risk Adjustment Program
1. Approval of State-Operated Risk Adjustment
2. Risk Adjustment User Fees
3. Overview of the Risk Adjustment Methodology HHS Will Implement When Operating Risk Adjustment on Behalf of a State
4. State Alternate Methodology
5. Risk Adjustment Data Validation
6. State-Submitted Alternate Risk Adjustment Methodology
C. Provisions and Parameters for the Transitional Reinsurance Program
1. State Standards Related to the Reinsurance Program
2. Contributing Entities and Excluded Entities
3. National Contribution Rate
4. Calculation and Collection of Reinsurance Contributions
5. Eligibility for Reinsurance Payments Under the Health Insurance Market Reform Rules
6. Reinsurance Payment Parameters
7. Uniform Adjustment to Reinsurance Payments
8. Supplemental State Reinsurance Payment Parameters
9. Allocation and Distribution of Reinsurance Contributions
10. Reinsurance Data Collection Standards
D. Provisions for the Temporary Risk Corridors Program
1. Definitions
2. Risk Corridors Establishment and Payment Methodology
3. Risk Corridors Data Requirements
4. Manner of Risk Corridor Data Collection
E. Provisions for the Advance Payments of the Premium Tax Credit and Cost-Sharing Reduction Programs
1. Exchange Responsibilities With Respect to Advance Payments of the Premium Tax Credit and Cost-Sharing Reductions
2. Exchange Functions: Certification of Qualified Health Plans
3. QHP Minimum Certification Standards Relating to Advance Payments of the Premium Tax Credit and Cost-Sharing Reductions
4. Health Insurance Issuer Responsibilities With Respect to Advance Payments of the Premium Tax Credit and Cost-Sharing Reductions
F. Provisions on User Fees for a Federally-facilitated Exchange (FFE)
G. Distributed Data Collection for the HHS-Operated Risk Adjustment and Reinsurance Programs
1. Background
2. Issuer Data Collection and Submission Requirements
H. Small Business Health Options Program
I. Medical Loss Ratio Requirements Under the Patient Protection and Affordable Care Act
1. Treatment of Premium Stabilization Payments, and Timing of Annual MLR Reports and Distribution of Rebates
2. Deduction of Community Benefit Expenditures
3. Summary of Errors in the MLR Regulation
IV. Provisions of the Final Regulations
V. Collection of Information Requirements
VI. Regulatory Impact Analysis
A. Statement of Need
B. Overall Impact
C. Impact Estimates of the Payment Notice Provisions
D. Alternatives Considered
E. Regulatory Flexibility Act
F. Unfunded Mandates
G. Federalism
Regulations Text

Acronyms

Affordable Care Act The Affordable Care Act of 2010 (which is the collective term for the Patient Protection and Affordable Care Act (Pub. L. 111–148) and the Health Care and Education Reconciliation Act (Pub. L. 111–152))

APTC Advance payments of the premium tax credit

ASO Administrative services only contractor

AV Actuarial Value

CFR Code of Federal Regulations

CHIP Children's Health Insurance Program

CMS Centers for Medicare & Medicaid Services

COBRA Consolidated Omnibus Budget Reconciliation Act

EHB Essential health benefits

ERISA Employee Retirement Income Security Act

FFE Federally-facilitated Exchange

FF–SHOP Federally-facilitated Small Business Health Options Program Exchange
FPL Federal poverty level
HCC Hierarchical condition category
HHS United States Department of Health and Human Services
HIPAA Health Insurance Portability and Accountability Act of 1996 (Pub. L. 104–191)
IHS Indian Health Service
IRS Internal Revenue Service
MLR Medical loss ratio
NAIC National Association of Insurance Commissioners
OMB United States Office of Management and Budget
OPM United States Office of Personnel Management
PHS Act Public Health Service Act
PRA Paperwork Reduction Act of 1985
QHP Qualified health plan
SHOP Small Business Health Options Program
The Code Internal Revenue Code of 1986
TPA Third party administrator

I. Executive Summary

A. Purpose

Beginning in 2014, individuals and small businesses will be able to purchase private health insurance through competitive marketplaces called Affordable Insurance Exchanges, ''Exchanges,'' or ''Marketplaces.'' Individuals who enroll in qualified health plans through Exchanges may receive premium tax credits that make health insurance more affordable and financial assistance to cover some or all cost sharing for essential health benefits. We expect that the premium tax credits, combined with the new insurance reforms, will significantly increase the number of individuals with health insurance coverage, particularly in the individual market. Premium stabilization programs—risk adjustment, reinsurance, and risk corridors—are expected to protect against the effects of adverse selection. These programs, in combination with the medical loss ratio program and market reforms extending guaranteed availability (also known as guaranteed issue), and prohibiting the use of factors such as health status, medical history, gender, and industry of employment to set premium rates, will help to ensure that every American has access to high-quality, affordable health care.

Premium stabilization programs: The Affordable Care Act establishes a permanent risk adjustment program, a transitional reinsurance program, and a temporary risk corridors program to provide payments to health insurance issuers that cover higher-risk populations and to more evenly spread the financial risk borne by issuers.

The transitional reinsurance program and the temporary risk corridors program, which begin in 2014, are designed to provide issuers with greater payment stability as insurance market reforms are implemented and Exchanges facilitate increased enrollment. The reinsurance program will reduce the uncertainty of insurance risk in the individual market by partially offsetting issuers' risk associated with high-cost enrollees. The risk corridors program will protect against uncertainty in rate setting for qualified health plans by limiting the extent of issuers' financial losses and gains. On an ongoing basis, the risk adjustment program is intended to provide increased payments to health insurance issuers that attract higher-risk populations, such as those with chronic conditions, and reduce the incentives for issuers to avoid higher-risk enrollees. Under this program, funds are transferred from issuers with lower-risk enrollees to issuers with higher-risk enrollees.

In the Premium Stabilization Rule [1] we laid out a regulatory framework for these three programs. In that rule, we stated that the specific payment parameters for those programs would be published in this final rule. In this final rule, we describe these standards, and include payment parameters for these programs.

Advance payments of the premium tax credit and cost-sharing reductions: This final rule establishes standards for advance payments of the premium tax credit and for cost-sharing reductions. These programs assist eligible low- and moderate-income Americans in affording health insurance on an Exchange. Section 1401 of the Affordable Care Act amended the Internal Revenue Code (26 U.S.C.) to add section 36B, allowing an advance, refundable premium tax credit to help individuals and families afford health insurance coverage. Section 36B of the Code was subsequently amended by the Medicare and Medicaid Extenders Act of 2010 (Pub. L. 111–309) (124 Stat. 3285 (2010)); the Comprehensive 1099 Taxpayer Protection and Repayment of Exchange Subsidy Overpayments Act of 2011 (Pub. L. 112–9) (125 Stat. 36 (2011)); and the Department of Defense and Full-Year Continuing Appropriations Act, 2011 (Pub. L. 112–10) (125 Stat. 38 (2011)). The section 36B credit is designed to make a qualified health plan (QHP) purchased on an Exchange affordable by reducing an eligible taxpayer's out-of-pocket premium cost.

Under sections 1401, 1411, and 1412 of the Affordable Care Act and 45 CFR part 155 subpart D, an Exchange makes an advance determination of tax credit eligibility for individuals who enroll in QHP coverage through the Exchange and seek financial assistance. Using information available at the time of enrollment, the Exchange determines whether the individual meets the income and other requirements for advance payments and the amount of the advance payments that can be used to pay premiums. Advance payments are made periodically under section 1412 of the Affordable Care Act to the issuer of the QHP in which the individual enrolls.

Section 1402 of the Affordable Care Act provides for the reduction of cost sharing for certain individuals enrolled in a QHP through an Exchange, and section 1412 of the Affordable Care Act provides for the advance payment of these reductions to issuers. This assistance will help eligible low- and moderate-income qualified individuals and families afford the out-of-pocket spending associated with health care services provided through Exchange-based QHP coverage. The statute directs issuers to reduce cost sharing for essential health benefits for individuals with household incomes between 100 and 400 percent of the Federal poverty level (FPL) who are enrolled in a silver level QHP through an individual market Exchange and are eligible for advance payments of the premium tax credit. The statute also directs issuers to eliminate cost sharing for Indians (as defined in section 4(d) of the Indian Self-Determination and Education Assistance Act) with a household income at or below 300 percent of the FPL who are enrolled in a QHP of any ''metal'' level (that is, bronze, silver, gold, or platinum) through the individual market in the Exchange, and prohibits issuers of QHPs from requiring cost sharing for Indians, regardless of household income, for items or services furnished directly by the Indian Health Service, an Indian Tribe, a Tribal Organization, or an Urban Indian Organization, or through referral under contract health services.

HHS published a bulletin [2] outlining an intended regulatory approach to calculating actuarial value and implementing cost-sharing reductions on February 24, 2012 (AV/CSR Bulletin). The AV/CSR Bulletin outlined an intended regulatory approach governing the calculation of AV, de minimis variation standards, silver plan

[1] 77 FR 17220 (March 23, 2012).

[2] Available at: *http://cciio.cms.gov/resources/files/Files2/02242012/Av-csr-bulletin.pdf.*

variations for individuals eligible for cost-sharing reductions, and advance payments of cost-sharing reductions to issuers, among other topics. In the Exchange Establishment Rule,[3] we set forth eligibility standards for these cost-sharing reductions. In this final rule, we make minor revisions to the eligibility standards for families and establish standards governing the administration of cost-sharing reductions and provide specific payment parameters for the program.

Federally-facilitated Exchange user fees: Section 1311(d)(5)(A) of the Affordable Care Act contemplates an Exchange charging assessments or user fees to participating issuers to generate funding to support its operations. When operating a Federally-facilitated Exchange under section 1321(c)(1) of the Affordable Care Act, HHS has the authority under sections 1321(c)(1) and 1311(d)(5)(A) of the statute to collect and spend such user fees. In addition, 31 U.S.C. 9701 permits a Federal agency to establish a charge for a service provided by the agency. Office of Management and Budget Circular A–25 Revised (Circular A–25R) establishes Federal policy regarding user fees and specifies that a user charge will be assessed against each identifiable recipient for special benefits derived from Federal activities beyond those received by the general public. In this final rule, we establish a user fee for issuers participating in a Federally-facilitated Exchange.

Small Business Health Options Program (SHOP): Section 1311(b)(1)(B) of the Affordable Care Act directs each State that chooses to operate an Exchange to establish a SHOP that provides QHP options for small businesses. The Exchange Establishment Rule sets forth standards for the administration of SHOP Exchanges. In this final rule, we clarify and expand upon the standards established in the Exchange Establishment Rule.

Medical loss ratio (MLR) program: Section 2718 of the Public Health Service Act (PHS Act) generally requires health insurance issuers to submit an annual MLR report to HHS and provide rebates of premium if they do not achieve specified MLRs. On December 1, 2010, we published an interim final rule entitled ''Health Insurance Issuers Implementing Medical Loss Ratio (MLR) Requirements under the Patient Protection and Affordable Care Act'' (75 FR 74864) which established standards for the MLR program. Since then, we have made several revisions and technical corrections to those rules. This final rule amends the regulations to specify how issuers are to account for payments or receipts from the risk adjustment, reinsurance, and risk corridors programs, and to change the timing of the annual MLR report and distribution of rebates required of issuers to account for the premium stabilization programs. This final rule also amends the regulations to revise the treatment of community benefit expenditures in the MLR calculation for issuers exempt from Federal income tax to promote a level playing field.

B. Summary of the Major Provisions

This final rule fills in the framework established by the Premium Stabilization Rule with provisions and parameters for the three premium stabilization programs—the permanent risk adjustment program, the transitional reinsurance program, and the temporary risk corridors program. It also establishes key provisions governing advance payments of the premium tax credit, cost-sharing reductions, and user fees for Federally-facilitated Exchanges. Finally, the final rule includes a number of amendments relating to the SHOP and the MLR program.

Risk Adjustment: The goal of the Affordable Care Act risk adjustment program is to mitigate the impact of possible adverse selection and stabilize the premiums in the individual and small group markets as and after insurance market reforms are implemented. We are finalizing a number of standards and parameters for implementing the risk adjustment program, including:

- Provisions governing a State operating a risk adjustment program;
- The risk adjustment methodology HHS will use when operating risk adjustment on behalf of a State, including the risk adjustment model, the payments and charges methodology, and the data collection approach; and
- An outline of the data validation process we expect to use when operating risk adjustment on behalf of a State.

Reinsurance: The Affordable Care Act directs that a transitional reinsurance program be established in each State to help stabilize premiums for coverage in the individual market from 2014 through 2016. In this final rule, we establish a number of standards and parameters for implementing the reinsurance program, including:

- Provisions excluding certain types of health insurance coverage and plans from reinsurance contributions;
- The national per capita contribution rate and the methodology for calculating the contributions to be paid by health insurance issuers and self-insured group health plans;
- Provisions establishing eligibility for reinsurance payments;
- The uniform reinsurance payment parameters and the approach that HHS will use to calculate and administer the reinsurance program on behalf of a State; and
- The distributed data collection approach we will use to implement the reinsurance program.

Risk Corridors: The temporary risk corridors program permits the Federal government and QHPs to share in profits or losses resulting from inaccurate rate setting from 2014 through 2016. We are finalizing a change to the risk corridors calculation in which reinsurance contributions will be treated as a regulatory fee instead of an adjustment to allowable costs, and are replacing the term ''taxes'' in our proposed definition of taxes with the term ''taxes and regulatory fees.'' We are also finalizing provisions governing the treatment of profits and taxes and regulatory fees within the risk corridors calculation. This provision aligns the risk corridors calculation with the MLR calculation. We are also finalizing an annual schedule for the program and standards for data submissions.

Advance Payments of the Premium Tax Credit: Sections 1401 and 1411 of the Affordable Care Act provide for advance payments of the premium tax credit for low- and moderate-income enrollees in a QHP through an Exchange. In this final rule, we are finalizing a number of standards governing the administration of this program, including:

- Provisions governing the reduction of premiums by the amount of any advance payments of the premium tax credit; and
- Provisions governing the allocation of premiums to essential health benefits.

Cost-Sharing Reductions: Sections 1402 and 1412 of the Affordable Care Act provide for reductions in cost sharing on essential health benefits for low- and moderate-income enrollees in silver level health plans offered in the individual market on Exchanges. It also provides for reductions in cost sharing for Indians enrolled in QHPs at any metal level. In this final rule, we establish a number of standards governing the cost-sharing reduction program, including:

- Provisions governing the design of variations of QHPs with cost-sharing structures for enrollees of various income levels and for Indians to implement cost-sharing reductions;

[3] 77 FR 18310 (March 27, 2012).

• The maximum annual limitations on cost sharing applicable to the plan variations;

• Provisions governing the assignment and reassignment of enrollees to plan variations based on eligibility for cost-sharing reductions;

• Provisions governing issuer submissions of estimates of cost-sharing reductions, which are paid in advance to QHP issuers by the Federal government; and

• Provisions governing reconciliation of these advance estimates against actual cost-sharing reductions provided.

User Fees: This final rule establishes a user fee, calculated as a percentage of the premium for a QHP, applicable to issuers participating in a Federally-facilitated Exchange. This final rule also outlines HHS's approach to calculating the fee.

SHOP: Beginning in 2014, SHOP Exchanges will allow small employers to offer employees a variety of QHPs. In this final rule, we establish a number of standards and processes for implementing SHOP Exchanges, including:

• Standards governing the definitions and counting methods used to determine whether an employer is a small or large employer and whether an employee is a full-time employee;

• A method for employers to make a QHP available to employees in the Federally-facilitated SHOP (FF–SHOP);

• The default minimum participation rate in the FF–SHOP;

• QHP standards linking FFE and FF–SHOP participation and ensuring broker commissions in FF–SHOP that are the same as those in the outside market; and

• Allowing Exchanges and SHOPs to selectively list only brokers registered with the Exchange or SHOP (and adopting that policy for FFEs and FF–SHOPs).

MLR: The MLR program requires an issuer to rebate a portion of premiums if its medical loss ratio falls short of the applicable standard for the reporting year. This ratio is calculated as the sum of health care claims costs and amounts spent on quality improvement activities divided by premium revenue, excluding taxes and regulatory fees, and after accounting for the premium stabilization programs. In this final rule, we establish a number of standards governing the MLR program, including:

• Provisions accounting for risk adjustment, reinsurance, and risk corridors payments and charges in the MLR calculation;

• A revised timeline for MLR reporting and rebates; and

• Provisions modifying the treatment of community benefit expenditures.

C. Costs and Benefits

The provisions of this final rule, combined with other provisions in the Affordable Care Act, will improve the individual insurance market by making insurance more affordable and accessible to millions of Americans who currently do not have affordable options available to them. The shortcomings of the individual market today have been widely documented.[4]

These limitations of the individual market are made evident by how few people actually purchase coverage in the individual market. In 2011, approximately 48.6 million people were uninsured in the United States,[5] while only around 10.8 million were enrolled in the individual market.[6] The relatively small fraction of the target market that actually purchases coverage in the individual market in part reflects people's resources, how expensive the product is relative to its value, and how difficult it is for many people to access coverage.

The provisions of this final rule, combined with other provisions in the Affordable Care Act, will improve the functioning of both the individual and the small group markets while stabilizing premiums. The transitional reinsurance program will help to stabilize premiums in the individual market. Reinsurance will attenuate individual market rate increases that might otherwise occur because of the immediate enrollment of higher risk individuals, potentially including those currently in State high-risk pools. In 2014, it is anticipated that reinsurance payments will result in premium decreases in the individual market of between 10 and 15 percent relative to the expected cost of premiums without reinsurance.

The risk corridors program will protect QHP issuers in the individual and small group market against inaccurate rate setting and will permit issuers to lower rates by not adding a risk premium to account for perceived uncertainties in the 2014 through 2016 markets.

The risk adjustment program protects against the potential of adverse selection by allowing issuers to set premiums according to the average actuarial risk in the individual and small group market without respect to the type of risk selection the issuer would otherwise expect to experience with a specific product offering in the market. This should lower the risk issuers would otherwise price into premiums in the expectation of enrolling individuals with unknown health status. In addition, it mitigates the incentive for health plans to avoid unhealthy members. The risk adjustment program also serves to level the playing field inside and outside of the Exchange.

Provisions addressing advance payments of the premium tax credit and cost-sharing reductions will help provide financial assistance for certain eligible individuals enrolled in QHPs through the Exchanges. This assistance will help many low-and moderate-income individuals and families obtain health insurance. For many people, cost sharing is a significant barrier to obtaining needed health care.[7] The availability of premium tax credits and cost-sharing reductions through Exchanges starting in 2014 will result in lower net premium rates for many people currently purchasing coverage in the individual market, and will encourage younger and healthier enrollees to enter the market, leading to a healthier risk pool and to reductions in premium rates for current policyholders.[8]

The provisions addressing SHOP Exchanges will reduce the burden and costs of enrolling employees in small group plans, and give small businesses many of the cost advantages and choices that large businesses already have. Additionally, SHOP Exchanges will

[4] Michelle M. Doty et al., Failure to Protect: Why the Individual Insurance Market Is Not a Viable Option for Most U.S. Families: Findings from the Commonwealth Fund Biennial Health Insurance Survey, 2007, The Commonwealth Fund, July 2009; Sara R. Collins, Invited Testimony: Premium Tax Credits Under The Affordable Care Act: How They Will Help Millions Of Uninsured And Underinsured Americans Gain Affordable, Comprehensive Health Insurance, The Commonwealth Fund, October 27, 2011.

[5] Source: U.S. Census Bureau, Current Population Survey, 2012 Annual Social and Economic Supplement, Table HI01. Health Insurance Coverage Status and Type of Coverage by Selected Characteristics: 2011.

[6] Source: CMS analysis of June 2012 Medical Loss Ratio Annual Reporting data for 2011 MLR reporting year, available at *http://cciio.cms.gov/resources/data/mlr.html.*

[7] Brook, Robert H., John E. Ware, William H. Rogers, Emmett B. Keeler, Allyson Ross Davies, Cathy D. Sherbourne, George A. Goldberg, Kathleen N. Lohr, Patricia Camp and Joseph P. Newhouse. *The Effect of Coinsurance on the Health of Adults: Results from the RAND Health Insurance Experiment.* Santa Monica, CA: RAND Corporation, 1984. Available at: *http://www.rand.org/pubs/reports/R3055.*

[8] Congressional Budget Office, Letter to Honorable Evan Bayh, providing an Analysis of Health Insurance Premiums Under the Patient Protection and Affordable Care Act, November 30, 2009; Sara R. Collins, Invited Testimony: Premium Tax Credits Under The Affordable Care Act: How They Will Help Millions Of Uninsured And Underinsured Americans Gain Affordable, Comprehensive Health Insurance, The Commonwealth Fund, October 27, 2011; Fredric Blavin et al., The Coverage and Cost Effects of Implementation of the Affordable Care Act in New York State, Urban Institute, March 2012.

allow for small employers to preserve control over health plan choices while saving employers money by spreading issuers' administrative costs across more employers.

The provisions addressing the MLR program will result in a more accurate calculation of MLR and rebate amounts, since it will reflect issuers' claims-related expenditures, after adjusting for the premium stabilization programs.

Issuers may incur some one-time fixed costs to comply with the provisions of the final rule, including administrative and hardware costs. However, issuer revenues and expenditures are also expected to increase substantially as a result of the expected increase in the number of people purchasing individual market coverage. In addition, States may incur administrative and operating costs if they choose to establish their own programs. In accordance with Executive Orders 12866 and 13563, we believe that the benefits of this regulatory action would justify the costs.

II. Background

Starting in 2014, individuals and small businesses will be able to purchase qualified health plans—private health insurance that has been certified as meeting certain standards—through competitive marketplaces, called Exchanges. The Department of Health and Human Services, the Department of Labor, and the Department of the Treasury have been working in close coordination to release guidance related to qualified health plans and Exchanges in several phases. The Patient Protection and Affordable Care Act (Pub. L. 111–148) was enacted on March 23, 2010. The Health Care and Education Reconciliation Act (Pub. L. 111–152) was enacted on March 30, 2010. We refer to the two statutes collectively as the Affordable Care Act in this final rule. HHS published detail and parameters related to the risk adjustment, reinsurance, and risk corridors programs; cost-sharing reductions; user fees for Federally-facilitated Exchanges; advance payments of the premium tax credit; the Federally-facilitated Small Business Health Option Program; and the medical loss ratio program, in a December 7, 2012 **Federal Register** proposed rule entitled ''Patient Protection and Affordable Care Act; HHS Notice of Benefit and Payment Parameters for 2014'' (77 FR 73118).

A. Premium Stabilization

A proposed regulation was published in the **Federal Register** on July 15, 2011 (76 FR 41930) to implement health insurance premium stabilization policies in the Affordable Care Act. The Premium Stabilization Rule implementing the health insurance premium stabilization programs (that is, risk adjustment, reinsurance, and risk corridors) (Premium Stabilization Rule) (77 FR 17220) was published in the **Federal Register** on March 23, 2012. A white paper on risk adjustment concepts was published on September 12, 2011 (Risk Adjustment White Paper). A bulletin was published on May 1, 2012, outlining our intended approach to implementing risk adjustment when we are operating risk adjustment on behalf of a State (Risk Adjustment Bulletin). On May 7 and 8, 2012, we hosted a public meeting in which we discussed that approach (Risk Adjustment Spring Meeting).

A bulletin was published on May 31, 2012, outlining our intended approach to making reinsurance payments to issuers when we are operating the reinsurance program on behalf of a State (Reinsurance Bulletin). HHS solicited comment on proposed operations for both reinsurance and risk adjustment when we are operating the program on behalf of a State.

B. Cost-Sharing Reductions

The AV/CSR Bulletin was published on February 24, 2012 outlining an intended regulatory approach to calculating actuarial value and implementing cost-sharing reductions. In that bulletin, we outlined an intended regulatory approach for the design of plan variations for individuals eligible for cost-sharing reductions and advance payments and reimbursement of cost-sharing reductions to issuers, among other topics. We reviewed and considered comments to the AV/CSR Bulletin in developing the provisions relating to cost-sharing reductions in this final rule.

C. Advance Payments of the Premium Tax Credit

A proposed regulation relating to the health insurance premium tax credit was published by the Department of the Treasury in the **Federal Register** on August 17, 2011 (76 FR 50931). A final rule relating to the health insurance premium tax credit was published by the Department of the Treasury in the **Federal Register** on May 23, 2012 (77 FR 30377, to be codified at 26 CFR parts 1 and 602).

D. Exchanges

A Request for Comment relating to Exchanges was published in the **Federal Register** on August 3, 2010 (75 FR 45584). An Initial Guidance to States on Exchanges was issued on November 18, 2010. A proposed regulation was published in the **Federal Register** on July 15, 2011 (76 FR 41866) to implement components of the Exchange. A proposed regulation regarding Exchange functions in the individual market, eligibility determinations, and Exchange standards for employers was published in the **Federal Register** on August 17, 2011 (76 FR 51202). A final rule implementing components of the Exchanges and setting forth standards for eligibility for Exchanges (Exchange Establishment Rule) was published in the March 27, 2012 **Federal Register** (77 FR 18310).

A proposed rule which, among other things, reflects new statutory eligibility provisions, titled ''Medicaid, Children's Health Insurance Programs, and Exchanges: Essential Health Benefits in Alternative Benefit Plans, Eligibility Notices, Fair Hearing and Appeal Processes for Medicaid and Exchange Eligibility Appeals and Other Provisions Related to Eligibility and Enrollment for Exchanges, Medicaid and CHIP, and Medicaid Premiums and Cost Sharing'' was published in the January 22, 2013 **Federal Register** (78 FR 4594) (Medicaid and Exchange Eligibility Appeals and Notices).

E. Market Reform Rules

A notice of proposed rulemaking relating to market reforms and effective rate review was published in the **Federal Register** on November 26, 2012 (77 FR 70584). The final rule was made available for public inspection at the Office of the Federal Register on February 22, 2013 (Market Reform Rule).

F. Essential Health Benefits and Actuarial Value

A notice of proposed rulemaking relating to essential health benefits and actuarial value was published in the **Federal Register** on November 26, 2012 (77 FR 70644). The final rule was published in the **Federal Register** on February 25, 2013 (78 FR 12834) (EHB/AV Rule).

G. Medical Loss Ratio

HHS published a request for comment on section 2718 of the PHS Act in the April 14, 2010 **Federal Register** (75 FR 19297), and published an interim final rule with 60-day comment period relating to MLR program on December 1, 2010 (75 FR 74864). An interim final rule with 30-day comment period and a final rule with 30-day comment period were published in the **Federal Register** on December 7, 2011 (76 FR 76596 and 76574). A final rule was published in

the **Federal Register** on May 16, 2012 (77 FR 28790).

H. Tribal Consultations

Following publication of the proposed rule, we issued a letter to Tribal leaders seeking input on the provisions of the proposed rule. We also discussed the provisions of the proposed rule in an all-Tribes webinar and conference call and in two meetings with the Tribal Technical Advisory Group. We considered the comments offered during these discussions in developing the provisions in this final rule.

III. Provisions of the Proposed Rule and Responses to Public Comments

We received approximately 420 comments from consumer advocacy groups, health care providers, employers, health insurers, health care associations, and individuals. The comments ranged from general support or opposition to the proposed provisions to very specific questions or comments regarding proposed changes. In this section, we summarize the provisions of the proposed rule and discuss and provide responses to the comments (with the exception of comments on the paperwork burden or the economic impact analysis, which we discuss in those sections of this final rule). We have carefully considered these comments in finalizing this rule.

Comment: We received a number of comments requesting that the comment period be extended to 60 days.

Response: HHS provided a 30-day comment period, which is consistent with the Administrative Procedure Act. We note that HHS previously sought and received significant comment on the Risk Adjustment White Paper, the Risk Adjustment Bulletin, presentations made during the Risk Adjustment Spring Meeting, the Reinsurance Bulletin, the AV/CSR Bulletin, and the Premium Stabilization Rule, which outlined the policy proposed in the proposed rule. HHS believes that interested stakeholders had adequate opportunity to provide comment on the policies established in this final rule.

Comment: One commenter requested that HHS issue a separate final rule containing provisions for each part of the Code of Federal Regulations.

Response: As noted in the Premium Stabilization Rule, the proposed rule, and this final rule, many of the programs covered by this rule are closely linked. To simplify the regulatory process, facilitate public comment, and provide the information needed to meet statutory deadlines, we elected to propose and finalize these regulatory provisions in one rule.

Comment: We received several comments pertaining to the proposed EHB/AV Rule and the proposed Market Reform Rule.

Response: Those comments are addressed in the final EHB/AV Rule and the final Market Reform Rule.

Comment: One commenter suggested that the standards set forth by HHS pertaining to the HHS-operated risk adjustment or reinsurance programs be the minimum requirements for State-operated risk adjustment or reinsurance programs.

Response: HHS aims to provide States with flexibility in implementing these programs while ensuring that the goals of the premium stabilizations programs are being met. Many of the provisions applicable to the risk adjustment and reinsurance programs when operated by a State are also applicable to these programs when operated by HHS on behalf of a State.

Comment: Several commenters asked that HHS monitor and oversee the implementation of the premium stabilization programs.

Response: HHS takes seriously its responsibility to monitor the implementation of these programs to protect consumers, prevent fraud and abuse, and ensure the programs achieve their goals. We will provide further detail on the oversight of these programs in future rulemaking and guidance.

A. Provisions for the State Notice of Benefit and Payment Parameters

In § 153.100(c), we proposed to require that, for benefit year 2014 only, a State must publish a State notice by March 1, 2013, or by the 30th day following publication of the final HHS notice of benefit and payment parameters for 2014, whichever is later. Because the effective date of this rule will be 60 days after its publication, we will not finalize the proposed change to § 153.100(c). Nevertheless, consistent with our proposal, we are finalizing our policy that, for 2014 only, a State must publish a State notice of benefit and payment parameters by the 30th day following publication of this final rule by deeming the March 1 deadline specified in the existing regulation to be extended until the date that is 30 days after publication of this final rule.

Comment: A number of commenters supported the proposed deadline extension for benefit year 2014, while others opposed such an extension. Some suggested that HHS not allow States to operate risk adjustment or reinsurance.

Response: We believe that States should have the flexibility to operate risk adjustment and reinsurance. Because of the publication date of this final rule, it is clear that a State will not have the notice necessary to publish a State notice of benefit and payment parameters by the deadline specified in the regulation—that is, March 1, 2013 for the 2014 benefit year. Thus, as described above, although we are not finalizing our proposal to amend the regulation, we are setting the deadline for 2014 only as the 30th day after publication of this final rule.

B. Provisions and Parameters for the Permanent Risk Adjustment Program

The risk adjustment program is a permanent program created by Section 1343 of the Affordable Care Act that transfers funds from lower risk, non-grandfathered plans to higher risk, non-grandfathered plans in the individual and small group markets, inside and outside the Exchanges. In subparts D and G of the Premium Stabilization Rule, we established standards for the administration of the risk adjustment program. A State approved or conditionally approved by the Secretary to operate an Exchange may establish a risk adjustment program, or have HHS do so on its behalf. Section 1343 of the Affordable Care Act requires each State to operate a risk adjustment program. In States that have elected not to operate their own risk adjustment program, HHS will operate a program on their behalf. Our authority to operate risk adjustment on the State's behalf arises from sections 1321(c)(1) and 1343 of the Affordable Care Act. Based on HHS's communications with States, as of February 25, 2013, Massachusetts is the only State electing to operate a risk adjustment program for the 2014 benefit year.

In the Premium Stabilization Rule, we established that a risk adjustment program is operated using a risk adjustment methodology. States operating their own risk adjustment program may use a risk adjustment methodology developed by HHS, or may elect to submit an alternate methodology to HHS for approval. In the Premium Stabilization Rule, we also laid out standards for States and issuers with respect to the collection and validation of risk adjustment data.

In section III.B.1. of the proposed rule, we proposed standards for HHS approval of a State-operated risk adjustment program (regardless of whether a State elects to use the HHS-developed methodology or an alternate, Federally certified risk adjustment methodology). In section III.B.2. of the proposed rule, we proposed a small fee to support HHS operation of the risk adjustment program. In section III.B.3. of the proposed rule, we described the

methodology that HHS would use when operating a risk adjustment program on behalf of a State. States operating a risk adjustment program can use this methodology, or submit an alternate methodology, in a process we described in section III.B.4. of the proposed rule. Finally, in section III.B.5. of the proposed rule, we described the data validation process we proposed to use when operating a risk adjustment program on behalf of a State. (These provisions are discussed fully in the proposed rule at 77 FR at 73123–73149).

1. Approval of State-Operated Risk Adjustment

a. Risk Adjustment Approval Process

In the proposed rule, we proposed an approval process for States seeking to operate their own risk adjustment program. Specifically, we proposed a new paragraph (c) in § 153.310, entitled ''State responsibility for risk adjustment,'' which sets forth a State's responsibilities with regard to risk adjustment program operations. With this change, we also proposed to redesignate paragraphs (c) and (d) to paragraphs (e) and (f) of § 153.310.

In paragraph § 153.310(c)(1), we proposed that if a State is operating a risk adjustment program for a benefit year, the State administer the program through an entity that meets certain standards. These standards would ensure the entity has the capacity to operate the risk adjustment program throughout the benefit year, and is able to administer the Federally certified risk adjustment methodology the State has chosen to use.

As proposed in § 153.310(c)(1)(i), the entity must be operationally ready to implement the applicable Federally certified risk adjustment methodology and process the resulting payments and charges. We believe that it is important for a State to demonstrate that its risk adjustment entity has the capacity to implement the applicable Federally certified risk adjustment methodology so that issuers may have confidence in the program, and so that the program can effectively mitigate the potential effects of adverse selection. To meet this standard, we proposed that a State demonstrate that the risk adjustment entity: (1) Have systems in place to implement the data collection approach, to calculate individual risk scores, and calculate issuers' payments and charges in accordance with the applicable Federally certified risk adjustment methodology; and (2) have tested, or have plans to test, the functionality of the system that would be used for risk adjustment operations prior to the start of the applicable benefit year. We proposed that States also demonstrate that the entity has legal authority to carry out risk adjustment program operations, and has the resources to administer the applicable risk adjustment methodology in its entirety, including the ability to make risk adjustment payments and collect risk adjustment charges.

We proposed in paragraph § 153.310(c)(1)(ii) that the entity have relevant experience to operate a risk adjustment program. To meet this standard, we proposed that a State demonstrate that the entity have on staff, or have contracted with, individuals or firms with experience relevant to the implementation of a risk adjustment methodology. This standard is intended to ensure that the entity has the resources and staffing necessary to successfully operate the risk adjustment program.

We proposed in paragraph § 153.310(c)(2) that a State seeking to operate its own risk adjustment program ensure that the risk adjustment entity complies with all applicable provisions of subpart D of 45 CFR part 153 in the administration of the applicable Federally certified risk adjustment methodology. In particular, we proposed that the State ensure that the entity complies with the privacy and security standards set forth in § 153.340.

We proposed in § 153.310(c)(3) that the State conduct oversight and monitoring of risk adjustment activities in order for HHS to approve the State's risk adjustment program. Because the integrity of the risk adjustment program has important implications for issuers and enrollees, we proposed to consider the State's plan to monitor the conduct of the entity.

Finally, we proposed in § 153.310(d) that a State submit to HHS information that establishes that it and its risk adjustment entity meet the criteria set forth in § 153.310(c).

Comment: Commenters generally agreed with our approach to approving State risk adjustment programs beginning in benefit year 2015.

Response: We are finalizing these provisions as proposed.

b. Risk Adjustment Approval Process for Benefit Year 2014

Because of the unique timing issues for approving a State-operated risk adjustment program, we proposed a transitional policy for benefit year 2014. We proposed not to require that a State-operated risk adjustment program receive approval for benefit year 2014. Instead, we proposed a transitional, consultative process that would commence shortly after the provisions of this final rule are effective. We are finalizing these provisions as proposed.

Comment: One commenter supported the transitional process but urged that the transitional process not be applied to future years. Another commenter requested that HHS require approval in 2014, but make the approval determination on the basis of the proposed consultative process. Other commenters suggested that HHS not allow States to conduct risk adjustment until the agency could formally approve States, beginning in 2015.

Response: We proposed the transitional policy based on the unique circumstances of 2014, and we do not anticipate extending it to future years. Although we are mindful of concerns that States may not be fully ready to operate a complex risk adjustment program for benefit year 2014, we note that each aspect of a State's operations (including data collection) must be performed in line with one of the Federally certified risk adjustment methodologies published in this final rule. Finally, we note that any State that begins operation of risk adjustment under this transitional process must obtain formal certification for benefit year 2015. We believe this process is sufficiently robust to ensure any State operating risk adjustment in 2014 will be prepared to do so.

2. Risk Adjustment User Fees

In the proposed rule, we noted that, if a State is not approved to operate or chooses to forgo operating its own risk adjustment program, HHS would operate risk adjustment on the State's behalf. Our authority to operate risk adjustment on the State's behalf arises from sections 1321(c)(1) and 1343 of the Affordable Care Act. In States where HHS is operating risk adjustment, we proposed that issuers of risk adjustment covered plans remit a user fee to fund HHS's operation of a Federally operated risk adjustment program. The authority to charge this user fee can be found under sections 1343, 1311(d)(5), and 1321(c)(1) of the statute, and under 31 U.S.C. 9701, which permits a Federal agency to establish a charge for a service provided by the agency. OMB Circular No. A–25R, which establishes Federal policy regarding user fees, specifies that a user charge will be assessed against each identifiable recipient of special benefits derived from Federal activities beyond those received by the general public. The risk adjustment program will provide special benefits as defined in section 6(a)(1)(b) of OMB Circular No. A–25R to an issuer of a risk adjustment covered plan because it will mitigate the

financial instability associated with adverse selection as other market reforms go into effect. The risk adjustment program will also contribute to consumer confidence in the insurance industry by helping to stabilize premiums across the individual and small group health insurance markets.

We further proposed to determine the total amount needed to fund HHS risk adjustment operations by examining the contract costs of operating the program, including development of the model and methodology, collections, payments, account management, data collection, program integrity and audit functions, operational and fraud analytics, stakeholder training, and operational support (not including Federal personnel costs). We proposed to develop a per capita user fee rate by dividing the amount we intend to collect over the course of the benefit year by the expected annual enrollment in risk adjustment covered plans (other than plans not subject to market reforms and student health plans) for that benefit year. We also proposed a standardized schedule for assessment and collection of risk adjustment user fees. Although the user fees would be assessed on a per-enrollee-per-month basis to account for fluctuations in monthly enrollment, we proposed to collect them only once, in June of the year following the benefit year, in order to synchronize user fee collection with risk adjustment payments and charges.

Based on comments received, we are adding § 153.610(f), finalizing our risk adjustment user fee assessment and collection approach as proposed. We clarify that enrollment data for each month will be captured by the servers used in the distributed data collection approach. We are also finalizing our intention to set a per capita user fee rate in the annual HHS notice of benefit and payment parameters using the proposed methodology. The user fee will be determined by dividing HHS's total contract costs for risk adjustment operations in the applicable benefit year by the expected annual enrollment in risk adjustment covered plans for that benefit year. Based on this methodology, for benefit year 2014, we are establishing a per capita annual user fee rate of $0.96, which we will apply as a per-enrollee-per-month risk adjusted user fee of $0.08.

Comment: One commenter expressed support for the proposal to collect user fees to fund HHS risk adjustment operations. Other commenters, though not commenting on risk adjustment user fees specifically, urged HHS to minimize or eliminate the fees it collects from issuers in order to maintain affordable coverage in the post-2014 health insurance market.

Response: We believe that a reliable funding source is necessary to ensure a robust Federal risk adjustment program. We clarify that we are establishing the risk adjustment user fee for the sole purpose of funding HHS's costs for operating the Federal risk adjustment program, and we intend to keep the user fee amount as low as possible.

3. Overview of the Risk Adjustment Methodology HHS Will Implement When Operating Risk Adjustment on Behalf of a State

The goal of the risk adjustment program is to stabilize the premiums in the individual and small group markets as and after insurance market reforms are implemented. The risk adjustment methodology proposed in the proposed rule, which HHS would use when operating risk adjustment on behalf of a State, is based on the premise that premiums should reflect the differences in plan benefits and plan efficiency, not the health status of the enrolled population.

Under § 153.20 of the Premium Stabilization Rule, a risk adjustment methodology is made up of five elements:

- The *risk adjustment model* uses an individual's recorded diagnoses, demographic characteristics, and other variables to determine a risk score, which is a relative measure of how costly that individual is anticipated to be.
- The *calculation of plan average actuarial risk* and the *calculation of payments and charges* average all individual risk scores in a risk adjustment covered plan, make certain adjustments, and calculate the funds to be transferred between plans. In the proposed rule, these two elements of the methodology were presented together as the payment transfer formula.
- The *data collection approach* describes the program's approach to obtaining data. HHS will do so using the distributed model described in section III.G. of this final rule.
- The *schedule* for the risk adjustment program describes the timeframe for risk adjustment operations.

The risk adjustment methodology addresses three considerations: (1) The newly insured population; (2) plan metal levels and permissible rating variation; and (3) the need for inter-plan transfers that net to zero. Risk adjustment payments or charges are calculated from the payment transfer formula. The key feature of the HHS risk adjustment methodology is that the risk score alone does not determine whether a plan is assessed charges or receives payments. Transfers depend not only on a plan's average risk score, but also on its plan-specific cost factors relative to the average of these factors within a risk pool within a State.

As discussed in the proposed rule, the risk adjustment methodology developed by HHS:

- Was developed on commercial claims data for a population similar to the expected population to be risk adjusted;
- Uses the HCC grouping logic used in the Medicare population, with HCCs refined and selected to reflect the expected risk adjustment population;
- Calculates risk scores with a concurrent model (current year diagnoses predict current year costs);
- Establishes 15 risk adjustment models, one for each combination of metal level (platinum, gold, silver, bronze, catastrophic) and age group (adults, children, infants);
- Results in ''balanced'' payment transfers within a risk pool within a market within a State;
- Adjusts payment transfers for plan metal level, geographic rating area, induced demand, and age rating, so that transfers reflect health risk and not other cost differences; and
- Transfers funds between plans within a market within a State.

We are finalizing the methodology HHS will use when operating the risk adjustment program as proposed, with the following modifications: we have included individuals over 64 in the demographic factors; we have updated the cost-sharing reduction (CSR) adjustment factors for zero cost-sharing plan variations to align with the induced demand factors used in the CSR program; we have made technical corrections to the payment transfer formula; we have clarified that geographic cost factors will be calculated for each risk pool in each market in a State; and we have clarified how transfers will be calculated at the plan level.

Comment: We received many comments supporting HHS's general approach to the risk adjustment methodology we will use when operating risk adjustment on behalf of a State.

Response: We are finalizing the methodology as proposed with minor modifications.

Comment: We received one comment suggesting that current risk adjustment methodologies are inadequate because they do not fully account for the sickest patients with the most complex medical

conditions. Another commenter suggested that HHS take an expanded view of risk mitigation by working to ensure a stable risk pool.

Response: The Affordable Care Act establishes a risk adjustment program, and permits the Secretary to base this program on the criteria and methods used in Medicare Parts C and D. While we used criteria and methods from Medicare when appropriate, we also customized this methodology to best mitigate adverse selection based on our projections of the 2014 marketplace. Though we anticipate making future adjustments to the model, we seek to balance stakeholders' desire for a stable model in the initial years with introducing model improvements as additional data becomes available. We look forward to engaging with stakeholders throughout this process. We believe that this program, along with the other 2014 market reforms, will help ensure a stable risk pool.

Comment: We received one comment that HHS should provide issuers information to assess their risk scores and State average risk scores as part of the premium development process for 2014.

Response: As noted in the proposed rule, risk adjustment transfers depend not only on a plan's average risk score, but also on its cost factors compared to the average of these factors within a risk pool within a market within a State. HHS does not currently have the data necessary to calculate the State average risk score to provide to issuers in time for the development of 2014 premiums. HHS contemplates providing technical assistance to States and issuers who are interested in this information.

Comment: We received several comments that HHS should monitor the risk adjustment methodology's performance, with a particular focus on the newly insured population.

Response: We intend to monitor the methodology's performance to determine future adjustments to the model, as data become available.

a. Risk Adjustment Applied to Plans in the Individual and Small Group Markets

In the Premium Stabilization Rule, we defined a ''risk adjustment covered plan'' in § 153.20 as health insurance coverage offered in the individual or small group markets, excluding plans offering excepted benefits and certain other plans, including ''any other plan determined not to be a risk adjustment covered plan in the annual HHS notice of benefit and payment parameters.'' We proposed to amend this definition by replacing ''and any plan determined not to be a risk adjustment covered plan in the annual HHS notice of benefit and payment parameters'' with ''and any other plan determined not to be a risk adjustment covered plan in the applicable Federally certified risk adjustment methodology.'' We noted that, under this revised definition, we would describe any plans not determined to be risk adjustment covered plans under the HHS risk adjustment methodology in the annual HHS notice of benefit and payment parameters, which is subject to notice and comment.

We described our proposed treatment of certain types of plans (specifically, plans not subject to market reforms, student health plans, and catastrophic plans), and our proposed approach to risk pooling for risk adjustment purposes when a State merges markets for the purposes of the single risk pool provision described in section 1312(c) of the Affordable Care Act.

Plans not subject to market reforms: Certain types of plans offering non-grandfathered health insurance coverage in the individual and small group markets would not be subject to the insurance market reforms in the Market Reform Rule and the EHB/AV Rule. In addition, plans providing benefits through health insurance policies that begin in 2013, with renewal dates in 2014, would not be subject to these requirements until renewal in 2014. The statute specifies that the risk adjustment program is to assess charges on non-grandfathered health insurance coverage in the individual and small group markets with less than average actuarial risk and to make payments to non-grandfathered health insurance coverage in these markets with higher than average actuarial risk. We stated that we interpret actuarial risk to mean predictable risk that the issuer has not been able to compensate for through exclusion or pricing. In the current market, plans are generally not subject to the insurance market reforms that begin in 2014 described at § 147.102 (fair health insurance premiums), § 147.104 (guaranteed availability of coverage, subject to the student health insurance provisions at § 147.145), § 147.106 (guaranteed renewability of coverage, subject to the student health insurance provisions at § 147.145), § 156.80 (single risk pool), and subpart B of part 156 (essential health benefits), and so are generally able to minimize actuarial risk by excluding certain conditions (for example, maternity coverage for women of child-bearing age) and denying coverage to those with certain high-risk conditions.

In the proposed rule, we proposed to use the authority in section 1343(b) of the Affordable Care Act to ''establish criteria and methods to be used in carrying out * * * risk adjustment activities'' for plans not subject to insurance market reforms at § 147.102 (fair health insurance premiums), § 147.104 (guaranteed availability of coverage, subject to the student health insurance provisions at § 147.145), § 147.106 (guaranteed renewability of coverage, subject to the student health insurance provisions at § 147.145), § 156.80 (single risk pool), and subpart B of part 156 (essential health benefits package). We stated that because plans not subject to these market reform rules are able to effectively minimize actuarial risk, we believe these plans would have uniform and virtually zero actuarial risk. We proposed to treat these plans separately, such that these plans would not be subject to risk adjustment charges and would not receive risk adjustment payments. Also, these plans would not be subject to the issuer requirements described in subparts G and H of part 153. We noted that plans offering coverage through policies issued in 2013 and subject to these requirements upon renewal would become subject to risk adjustment upon renewal, and would comply with the requirements established in subparts G and H of part 153 at that time.

Student health plans: Only individuals attending a particular college or university are eligible to enroll in a student health plan (as described in § 147.145) offered by that college or university. In the proposed rule, we stated our belief that student health plans, because of their unique characteristics, will have relatively uniform actuarial risk. We proposed to use the authority in section 1343(b) of the Affordable Care Act to ''establish criteria and methods to be used in carrying out * * * risk adjustment activities'' to treat these plans as a separate group that would not be subject to risk adjustment charges and would not receive risk adjustment payments. Therefore, these plans would not be subject to the requirements described in subparts G and H of part 153.

Catastrophic plans: Unlike metal level coverage, only individuals age 30 and under, or individuals for whom insurance is deemed to be unaffordable, as specified in section 1302(e) of the Affordable Care Act, are eligible to enroll in catastrophic plans. Because of the unique characteristics of this population, we proposed to use our authority to establish ''criteria and methods'' to risk adjust catastrophic plans in a separate risk pool from the general (metal level) risk pool. Catastrophic plans with less than

average actuarial risk compared with other catastrophic plans would be assessed charges, while catastrophic plans with higher than average actuarial risk compared with other catastrophic plans would receive payments. We did not propose to exempt these plans from the requirements in subparts G and H of part 153.

Merger of markets: Section 1312(c) of the Affordable Care Act directs issuers to use a single risk pool for a market—the individual or small group market—when developing rates and premiums. Section 1312(c)(3) of the Affordable Care Act gives States the option to merge the individual and small group market into a single risk pool. To align risk pools for the risk adjustment program and rate development, we proposed to merge markets when operating risk adjustment on behalf of a State if the State elects to do the same for single risk pool purposes. When the individual and small group markets are merged, we proposed that the State average premium described in section III.B.3.c would be the average premium of all applicable individual and small group market plans in the applicable risk pool, and normalization under the transfer equation would occur across all plans in the applicable risk pool in the individual and small group market.

Risk adjustment in State of licensure: Risk adjustment is a State-based program in which funds are transferred within a market within a State, as described above. In general, a risk adjustment methodology will be linked to the rate and benefit requirements applicable under State and Federal law in a particular State. Such requirements may differ from State to State, and apply to policies filed and approved by the department of insurance in a State. However, a plan licensed in a State (and therefore subject to that State's rate and benefit requirements) may enroll individuals in multiple States. To help ensure that policies in the small group market are subject to risk adjustment programs linked to the State rate and benefit requirements applicable to that policy, we proposed in § 153.360 that a risk adjustment covered plan be subject to risk adjustment in the State in which the policy is filed and approved.

We are finalizing these provisions as proposed, with a clarification that risk adjustment covered plans in the small group market will be subject to risk adjustment in the State in which the employer's policy is filed and approved.

Comment: We received a number of comments that expressed support for our proposed approach to student health plans, plans not subject to market reform rules, and catastrophic plans. Several of these commenters urged HHS to align the single risk pool approach to student health plans with the proposed approach in risk adjustment. Some commenters expressed concern that separately risk adjusting catastrophic plans would prevent the enrollees in these plans from contributing to the general risk pool.

Response: Provisions related to the single risk pool provision were finalized in the Market Reform Rule, which was made available for public inspection at the Office of the Federal Register on February 22, 2013. Non-grandfathered student health insurance coverage is exempt from the single risk pool requirement.

As commenters noted, the risk adjustment program complements the single risk pool provision, which broadens the risk pool by including catastrophic claims experience in the development of the index rate. Because enrollment in catastrophic plans is limited to certain enrollees that are likely to have a different risk profile than enrollees in metal-level plans, we believe it is appropriate to risk adjust these plans in a separate risk pool. For this reason, we are finalizing the treatment of catastrophic plans, student health plans, and plans not subject to the market reform rules as proposed.

Comment: We received comments suggesting several different approaches to our proposal that risk adjustment covered plans be subject to risk adjustment in the State in which the enrollee's policy is filed and approved, including that we modify the requirement to mirror the MLR program's situs of contract requirement, and that we clarify that the employer, not the enrollee, is the policyholder in the small group market.

Response: We are modifying the proposed provision to clarify that risk adjustment covered plans in the small group will be subject to risk adjustment in the State in which the employer's policy is filed and approved.

b. Overview of the HHS Risk Adjustment Model

The proposed HHS risk adjustment models predict plan liability for an enrollee based on that person's age, sex, and diagnoses (risk factors), producing a risk score. We proposed separate models for adults, children, and infants to account for cost differences in each of these age groups. Each HHS risk adjustment model predicts individual-level risk scores, but is designed to predict average group costs to account for risk across plans. This method accords with the Actuarial Standard Board's Actuarial Standard of Practice for risk classification.

We are finalizing the HHS risk adjustment models as proposed with the following modifications: we have fixed a typographical error to include individuals over 64 in the demographic factors, we have clarified the calculation of age for infants who were born in one benefit year and discharged in the following benefit year, and we have updated the CSR adjustment factors to align with the induced demand factors used in the CSR program.

Comment: We received a number of comments supporting HHS's general approach to establishing risk adjustment models.

Response: We are finalizing the models as proposed with minor modifications.

Comment: One commenter expressed concern that the number of HHS risk adjustment models proposed would create inaccuracies in the model.

Response: The statistical performance of each of the models is well within the published ranges for concurrent models. The HHS risk adjustment models better predict plan liability because they account for age-related clinical and cost differences and differing plan liabilities due to differences in actuarial value across metal levels.

(1) Data Used To Develop the HHS Risk Adjustment Models

In the proposed rule, we described the data used to develop (that is, calibrate) the HHS risk adjustment models. We proposed that the HHS risk adjustment models would be concurrent and not include prescription drug use as a predictor. Finally, we proposed separate risk adjustment models for each metal level because plans at different metal levels would have different liability for enrollees with the same expenditure patterns. We received the following comments about these approaches:

Comment: We received several comments in support of HHS's decision not to include prescription drug data as a predictor in the HHS risk adjustment models. A number of other commenters suggested that HHS include prescription drug data as a predictor in the HHS risk adjustment models to improve each model's predictive accuracy, or consider inclusion of this data as a predictor in the future.

Response: HHS is finalizing its proposal to exclude prescription drugs for the initial HHS risk adjustment models, but will consider how prescription drugs could be included in future HHS risk adjustment models.

Comment: We received a number of comments in support of the concurrent

modeling approach, though a number of these comments suggested that we transition to a prospective model.

Response: In 2014, 2013 diagnostic data for individuals enrolled in risk adjustment covered plans will not be available. We also anticipate that enrollees may move between plans, or between programs. A concurrent model is better able to handle changes in enrollment than a prospective model because individuals newly enrolling in health plans may not have prior data available that can be used in risk adjustment. We are therefore finalizing our approach to use a concurrent model. We plan to investigate the feasibility of transitioning to a prospective approach in the future.

Comment: One commenter asked for further information about the standardized benefit designs used to estimate plan liability in the HHS risk adjustment models.

Response: Plan liabilities were defined by applying standardized benefit design parameters for each given metal level to total expenditures. The standard benefit designs were created using the Actuarial Value Calculator to ensure that each benefit design aligns with the applicable metal level. While an individual plan's design may differ from the standardized benefit, we believe the design is a reasonable approximation for the average plan design at each metal level. The catastrophic plan design was estimated using the estimated maximum annual limitation on cost sharing described in section III.E. of this final rule.

Comment: We received several comments on HHS's approach to account for infant claims if there is no separate infant birth claim from which to gather diagnoses. Some commenters encouraged HHS to require separate claims for mothers and infants. Some commenters recommended that HHS separate these claims in operations. One commenter noted that in the State of Washington there are legal impediments to separating claims for mothers and infants in the first 21 days of life.

Response: HHS calibrated the HHS risk adjustment models by excluding infant claims that were bundled with the mothers, as well as infants without birth codes due to data limitations. In operation, issuers will separate infant and mother claims when possible. If an infant claim cannot be separated, HHS will assign the infant to the lowest severity category and the ''term'' maturity category. We note that HHS does not intend to unbundle claims in operation.

Comment: We received one comment that data used to calibrate the HHS risk adjustment models will not reflect the risk adjustment population beginning in 2014. Several commenters suggested that the calibration data set did not reflect benefits that issuers will offer beginning in 2014.

Response: We believe that the commercial data set used for calibration is a reasonable approximation of the population that will be risk adjusted in 2014. The calibration data set was restricted to individuals with prescription drug coverage, mental health coverage, and medical coverage, which are part of the essential health benefits package that issuers will offer starting in 2014.

(2) Principles of Risk Adjustment and the HCC Classification System

We proposed to use a diagnostic classification system. A diagnostic classification system determines which diagnosis codes should be included, how the diagnosis codes should be grouped, and how the diagnostic groupings should interact for risk adjustment purposes. The ten principles that were used to develop the HCC classification system for the Medicare risk adjustment model also guided the creation of the HHS risk adjustment models that we proposed to use when HHS operates risk adjustment on behalf of a State. We selected 127 of the full classification of 264 HHS HCCs for inclusion in the HHS risk adjustment models.

Comment: We received several comments in support of the HHS HCC classification system.

Response: We are finalizing the HHS HCC classification system as proposed.

Comment: Several commenters requested that HHS provide the ICD–9 codes included in each HHS HCC.

Response: We have provided this information for the proposed HHS risk adjustment models on our Web site at: *http://cciio.cms.gov/resources/files/ra_instructions_proposed_1_2013.pdf* and *http://cciio.cms.gov/resources/files/ra_tables_proposed_1_2013.xlsx.* We intend to provide a final version of these documents to reflect the HHS risk adjustment models in the future.

Comment: Several commenters requested the classification of ICD–10 codes to HHS HCCs.

Response: We are completing the mapping of ICD–10 codes to HHS HCCs and will release this information in future guidance.

Comment: Several commenters suggested that additional HHS HCCs should be included in the HHS risk adjustment models.

Response: In selecting the factors to be included in the HHS risk adjustment models, we considered the basic criteria below to determine which HCCs should be included in the HHS risk adjustment model:

- Whether the HCC represents clinically significant medical conditions with significant costs for the target population;
- Whether there will be a sufficient sample size to ensure stable results for the HCC;
- Whether excluding the HCC would exclude (or limit the impact of) diagnoses particularly subject to discretionary coding;
- Whether the HCC identifies chronic or systematic conditions that represent insurance risk selection or risk segmentation, rather than random acute events;
- Whether the HCCs represent poor quality of care; and
- Whether the HCC is applicable to the model age group.

We also included a factor to measure increased utilization due to receipt of CSRs. Each model's R-squared and predictive ratios were within published ranges for concurrent models. Thus, we have not included additional HCCs at this time.

Comment: We received a comment in support of our approach to HHS HCC selection.

Response: We are finalizing the HHS HCCs included in the HHS risk adjustment models as proposed.

(3) Factors Included in the HHS Risk Adjustment Models

The proposed HHS risk adjustment models predict annualized plan liability expenditures using age and sex categories, HHS HCCs, and, where applicable, disease interactions. Dollar coefficients were estimated for these factors using weighted least squares regression, where the weight was the fraction of the year enrolled. For each model, the factors were the statistical regression dollar coefficients divided by a weighted average plan liability for the full modeling sample. Due to the inherent clinical and cost differences in the adult (age 21+), child (age 2–20), and infant (age 0–1) populations, HHS proposed separate risk adjustment models for each age group.

Comment: We received a few comments suggesting the weights of specific factors in the HHS risk adjustment models were lower than expected.

Response: The HHS risk adjustment models predict annualized plan liability. The factors were estimated using weighted least squares regression. For each risk adjustment model, the factors were the statistical regression

dollar values for each factor in the model divided by a weighted average plan liability for the full modeling sample. Some factors were grouped or constrained and thus do not exactly represent the statistical regression dollar value. Some factors were grouped or constrained to reduce model complexity, avoid inclusion of HHS HCCs with small sample size, limit upcoding by severity within an HCC hierarchy, reduce additivity within a disease group, and avoid coefficient values in which a lower-ranked HCC in a disease hierarchy had higher coefficient than a higher-ranked HCC.

Comment: A few commenters requested that age be calculated at the time of enrollment. Several commenters asked that age for newborns be defined as date of birth rather than the age as of the last day of enrollment in a risk adjustment covered plan. Another commenter requested that HHS clarify that age determinations be consistent between model calibration and program operation.

Response: The HHS risk adjustment models were calibrated using age as of the last month of enrollment due to data limitations. To align with model calibration, an enrollee's age for risk score calculation will be the age as of the enrollee's last day of enrollment in a risk adjustment covered plan in the applicable benefit year will be used for enrollees in program operation. We are clarifying our approach to calculating the age of infants who are born in a benefit year but are not discharged until the following year. In such a case, the infant will be defined as age 0 for both benefit years. For example, if an infant is born in December of 2014 but has a discharge date of January 2015, the infant would be assigned age 0 for purposes of risk score calculation in benefit year 2014 and for the entire 2015 benefit year.

Comment: We received comments supporting the inclusion of a demographic factor to account for individuals aged 65 or older. We also received comments requesting that the HHS risk adjustment models include additional factors such as income, receipt of care from an essential community provider, and enrollee language.

Response: In response to comments, we made a typographical correction to re-label the highest adult age factor as 60+. Because data for individuals 65 or older is not captured in the calibration dataset, the estimation of a separate demographic factor for those 65 or older is impractical at this time. Other factors such as income are also not feasible to include due to data limitations. Therefore, we have not modified the HHS risk adjustment models to include such factors. Tables 2, 4, and 5 contain the final factors for the HHS risk adjustment models.

Comment: We received several comments that the HHS risk adjustment models do not appropriately account for short-term enrollment. One commenter suggested that risk scores for individuals that were enrolled for only part of a year would be inaccurate.

Response: Our models were calibrated to account for short-term enrollment in several ways. First, enrollee diagnoses were included from the time of enrollment. Also, in the statistical estimation strategy for the HHS HCCs, average monthly expenditures were defined as the enrollee's expenditures for the enrollment period divided by the number of enrollment months, annualized expenditures (plan liability) were defined as average monthly expenditures multiplied by 12, and regressions were weighted by months of enrollment divided by 12. We believe that this statistical strategy, alongside the minimum enrollment requirement, ensures that monthly expenditures are correctly estimated for all individuals.

(4) Adjustments to Model Discussed in the Risk Adjustment White Paper

We proposed to include an adjustment for the receipt of CSRs in the HHS risk adjustment models, but not to adjust for receipt of reinsurance payments.

Comment: We received comments that were generally supportive of the CSR adjustment to risk scores. One commenter stated that the proposed factors do not adequately account for changes in utilization as enrollees in cost-sharing plan variations may also use more high cost services. Another commenter requested that HHS clarify whether plan liability for increased utilization due to CSR is accounted for by the CSR adjustment factor in the HHS risk adjustment models.

Response: We are finalizing the CSR adjustment factor as proposed, with the modification to the typographical error described in Table 1 below. The CSR adjustment factor for the HHS risk adjustment models is intended to account for the increased plan liability due to increased utilization of health care services by enrollees receiving CSRs.

Comment: We received several comments that noted a typographical error in the zero cost-sharing adjustments.

Response: We have revised the CSR adjustment to align with the CSR adjustment in section III.E. for enrollees in zero cost-sharing plan variations. Table 1 contains the final CSR adjustment factors.

Comment: Several commenters supported our proposal to not adjust the HHS risk adjustment models for reinsurance payments.

Response: We are finalizing our proposal to not adjust the HHS risk adjustment models for reinsurance payments since reinsurance is a temporary program and already offsets adverse selection.

TABLE 1—COST-SHARING REDUCTION ADJUSTMENT

Household income	Plan AV	Induced utilization factor
Silver Plan Variant Recipients		
100–150 percent of FPL	Plan Variation 94 percent	1.12
150–200 percent of FPL	Plan Variation 87 percent	1.12
200–250 percent of FPL	Plan Variation 73 percent	1.00
>250 percent of FPL	Standard Plan 70 percent	1.00
Zero Cost-Sharing Recipients		
<300 percent of FPL	Platinum (90 percent)	1.00
<300 percent of FPL	Gold (80 percent)	1.07
<300 percent of FPL	Silver (70 percent)	1.12
<300 percent of FPL	Bronze (60 percent)	1.15

TABLE 1—COST-SHARING REDUCTION ADJUSTMENT—Continued

Household income	Plan AV	Induced utilization factor
>300 percent of FPL	Limited Cost-Sharing Recipients	1.00

(5) Model Performance Statistics

To evaluate model performance, we examined the R-squared and predictive ratios of the HHS risk adjustment models.

Comment: Several commenters asked for further details on the statistical performance of the HHS risk adjustment models.

Response: HHS analyzed the statistical performance of each model (adult, child, infant at each metal level). The R-squared (the percentage of individual variation explained by the model) for each model was within the range of published estimates for concurrent models.[9] These values can be found in Table 8. Additionally, the predictive ratios for the overall samples for each of the 15 models were also within the range of published estimates.

(6) Summary of Models

For clarity, we describe here the HHS risk adjustment models that we are finalizing. An individual's risk score will be calculated for adults and children as the sum of the factors in the applicable model for the relevant age and sex categories, HHS HCCs, and, where applicable, disease interactions. These factors are listed below in Tables 2 and 4. In the adult models, an individual with at least one of the HCCs that comprises the severe illness indicator variable and at least one of the HCCs interacted with the severe illness indicator variable would be assigned a single interaction factor. A hierarchy is imposed on these interaction groups such that an individual with a high cost interaction is excluded from having a medium cost interaction. The high or the medium interaction factor would be added to demographic and diagnosis factors of the individual. The HCCs that comprise the severe illness indicator variable can be found in Table 3. The CSR adjustment factors listed in Table 1 are multiplied by the sum of the applicable demographic, HHS HCCs, and disease interaction factors.

The infant model utilizes a mutually exclusive group approach in which infants are assigned a maturity category (by gestation and birth weight) and a severity category. There are 5 maturity categories: Extremely Immature; Immature; Premature/Multiples; Term; and Age 1. For the maturity category, age 0 infants would be assigned to one of the first four categories and age 1 infants would be assigned to the age 1 category. As discussed previously, infants who are born in a benefit year but are not discharged until the following year will be defined as age 0 for both benefit years. There are 5 severity categories based on the clinical severity and associated costs of the non-maturity HCCs: Severity Level 1 (Lowest Severity) to Severity Level 5 (Highest Severity). All infants (age 0 or 1) are assigned to a severity category based on the highest severity of their non-maturity HCCs. The 5 maturity categories and 5 severity categories would be used to create 25 mutually exclusive interaction terms to which each infant is assigned. An infant who has HCCs in more than one severity category would be assigned to the highest of those severity categories. An infant who has no HCCs or only a newborn maturity HCC would be assigned to Severity Level 1 (Lowest). The male-age factor would be added to the maturity-severity category to which the infant is assigned, and the sum of the factors would be multiplied by the CSR adjustment factor. The maturity-severity factors and the HCCs that comprise these factors can be found in Tables 5–7.

TABLE 2—ADULT RISK ADJUSTMENT MODEL FACTORS

Factor	Platinum	Gold	Silver	Bronze	Catastrophic
Demographic Factors					
Age 21–24, Male	0.258	0.208	0.141	0.078	0.062
Age 25–29, Male	0.278	0.223	0.150	0.081	0.064
Age 30–34, Male	0.338	0.274	0.187	0.101	0.079
Age 35–39, Male	0.413	0.339	0.240	0.140	0.113
Age 40–44, Male	0.487	0.404	0.293	0.176	0.145
Age 45–49, Male	0.581	0.487	0.365	0.231	0.195
Age 50–54, Male	0.737	0.626	0.484	0.316	0.269
Age 55–59, Male	0.863	0.736	0.580	0.393	0.339
Age 60+, Male	1.028	0.880	0.704	0.487	0.424
Age 21–24, Female	0.433	0.350	0.221	0.101	0.072
Age 25–29, Female	0.548	0.448	0.301	0.156	0.120
Age 30–34, Female	0.656	0.546	0.396	0.243	0.203
Age 35–39, Female	0.760	0.641	0.490	0.334	0.293
Age 40–44, Female	0.839	0.713	0.554	0.384	0.338
Age 45–49, Female	0.878	0.747	0.583	0.402	0.352
Age 50–54, Female	1.013	0.869	0.695	0.486	0.427
Age 55–59, Female	1.054	0.905	0.726	0.507	0.443
Age 60+, Female	1.156	0.990	0.798	0.559	0.489

[9] Winkelman, Ross and Syed Mehmud. ''A Comparative Analysis of Claims-Based Tools for Health Risk Assessment.'' Society of Actuaries. April 2007.

TABLE 2—ADULT RISK ADJUSTMENT MODEL FACTORS—Continued

Factor	Platinum	Gold	Silver	Bronze	Catastrophic
Diagnosis Factors					
HIV/AIDS	5.485	4.972	4.740	4.740	4.749
Septicemia, Sepsis, Systemic Inflammatory Response Syndrome/Shock	13.696	13.506	13.429	13.503	13.529
Central Nervous System Infections, Except Viral Meningitis	7.277	7.140	7.083	7.117	7.129
Viral or Unspecified Meningitis	4.996	4.730	4.621	4.562	4.550
Opportunistic Infections	9.672	9.549	9.501	9.508	9.511
Metastatic Cancer	25.175	24.627	24.376	24.491	24.526
Lung, Brain, and Other Severe Cancers, Including Pediatric Acute Lymphoid Leukemia	11.791	11.377	11.191	11.224	11.235
Non-Hodgkin's Lymphomas and Other Cancers and Tumors	6.432	6.150	6.018	5.983	5.970
Colorectal, Breast (Age < 50), Kidney, and Other Cancers	5.961	5.679	5.544	5.500	5.483
Breast (Age 50+) and Prostate Cancer, Benign/Uncertain Brain Tumors, and Other Cancers and Tumors	3.509	3.294	3.194	3.141	3.121
Thyroid Cancer, Melanoma, Neurofibromatosis, and Other Cancers and Tumors	1.727	1.559	1.466	1.353	1.315
Pancreas Transplant Status/Complications	9.593	9.477	9.411	9.434	9.439
Diabetes with Acute Complications	1.331	1.199	1.120	1.000	0.957
Diabetes with Chronic Complications	1.331	1.199	1.120	1.000	0.957
Diabetes without Complication	1.331	1.199	1.120	1.000	0.957
Protein-Calorie Malnutrition	14.790	14.790	14.786	14.862	14.883
Mucopolysaccharidosis	2.335	2.198	2.130	2.071	2.052
Lipidoses and Glycogenosis	2.335	2.198	2.130	2.071	2.052
Amyloidosis, Porphyria, and Other Metabolic Disorders	2.335	2.198	2.130	2.071	2.052
Adrenal, Pituitary, and Other Significant Endocrine Disorders	2.335	2.198	2.130	2.071	2.052
Liver Transplant Status/Complications	18.445	18.197	18.105	18.165	18.188
End-Stage Liver Disease	6.412	6.102	5.974	6.001	6.012
Cirrhosis of Liver	2.443	2.255	2.177	2.137	2.125
Chronic Hepatitis	1.372	1.228	1.152	1.071	1.046
Acute Liver Failure/Disease, Including Neonatal Hepatitis	4.824	4.634	4.548	4.547	4.550
Intestine Transplant Status/Complications	77.945	78.110	78.175	78.189	78.195
Peritonitis/Gastrointestinal Perforation/Necrotizing Enterocolitis	13.144	12.823	12.681	12.743	12.764
Intestinal Obstruction	7.257	6.922	6.789	6.842	6.864
Chronic Pancreatitis	6.682	6.385	6.269	6.309	6.329
Acute Pancreatitis/Other Pancreatic Disorders and Intestinal Malabsorption	3.614	3.380	3.281	3.245	3.234
Inflammatory Bowel Disease	2.894	2.640	2.517	2.398	2.355
Necrotizing Fasciitis	7.878	7.622	7.508	7.545	7.559
Bone/Joint/Muscle Infections/Necrosis	7.878	7.622	7.508	7.545	7.559
Rheumatoid Arthritis and Specified Autoimmune Disorders	3.414	3.135	3.009	2.987	2.982
Systemic Lupus Erythematosus and Other Autoimmune Disorders	1.263	1.124	1.051	0.954	0.921
Osteogenesis Imperfecta and Other Osteodystrophies	3.524	3.300	3.184	3.126	3.107
Congenital/Developmental Skeletal and Connective Tissue Disorders	3.524	3.300	3.184	3.126	3.107
Cleft Lip/Cleft Palate	2.168	1.978	1.891	1.815	1.793
Hemophilia	49.823	49.496	49.321	49.330	49.329
Myelodysplastic Syndromes and Myelofibrosis	15.404	15.253	15.182	15.214	15.224
Aplastic Anemia	15.404	15.253	15.182	15.214	15.224
Acquired Hemolytic Anemia, Including Hemolytic Disease of Newborn	7.405	7.198	7.099	7.090	7.089
Sickle Cell Anemia (Hb-SS)	7.405	7.198	7.099	7.090	7.089
Thalassemia Major	7.405	7.198	7.099	7.090	7.089
Combined and Other Severe Immunodeficiencies	5.688	5.489	5.402	5.419	5.423
Disorders of the Immune Mechanism	5.688	5.489	5.402	5.419	5.423
Coagulation Defects and Other Specified Hematological Disorders	3.080	2.959	2.899	2.880	2.872
Drug Psychosis	3.776	3.517	3.389	3.302	3.274
Drug Dependence	3.776	3.517	3.389	3.302	3.274
Schizophrenia	3.122	2.854	2.732	2.647	2.624
Major Depressive and Bipolar Disorders	1.870	1.698	1.601	1.476	1.436
Reactive and Unspecified Psychosis, Delusional Disorders	1.870	1.698	1.601	1.476	1.436
Personality Disorders	1.187	1.065	0.974	0.836	0.790
Anorexia/Bulimia Nervosa	3.010	2.829	2.732	2.657	2.631
Prader-Willi, Patau, Edwards, and Autosomal Deletion Syndromes	5.387	5.219	5.141	5.101	5.091

TABLE 2—ADULT RISK ADJUSTMENT MODEL FACTORS—Continued

Factor	Platinum	Gold	Silver	Bronze	Catastrophic
Down Syndrome, Fragile X, Other Chromosomal Anomalies, and Congenital Malformation Syndromes	1.264	1.171	1.099	1.015	0.985
Autistic Disorder	1.187	1.065	0.974	0.836	0.790
Pervasive Developmental Disorders, Except Autistic Disorder	1.187	1.065	0.974	0.836	0.790
Traumatic Complete Lesion Cervical Spinal Cord	11.728	11.537	11.444	11.448	11.449
Quadriplegia	11.728	11.537	11.444	11.448	11.449
Traumatic Complete Lesion Dorsal Spinal Cord	10.412	10.205	10.108	10.111	10.111
Paraplegia	10.412	10.205	10.108	10.111	10.111
Spinal Cord Disorders/Injuries	6.213	5.969	5.861	5.843	5.836
Amyotrophic Lateral Sclerosis and Other Anterior Horn Cell Disease	3.379	3.094	2.967	2.927	2.919
Quadriplegic Cerebral Palsy	2.057	1.810	1.681	1.610	1.589
Cerebral Palsy, Except Quadriplegic	0.729	0.596	0.521	0.437	0.408
Spina Bifida and Other Brain/Spinal/Nervous System Congenital Anomalies	0.727	0.590	0.522	0.467	0.449
Myasthenia Gravis/Myoneural Disorders and Guillain-Barre Syndrome/Inflammatory and Toxic Neuropathy	5.174	4.999	4.921	4.900	4.891
Muscular Dystrophy	2.118	1.928	1.848	1.771	1.745
Multiple Sclerosis	7.441	6.971	6.764	6.830	6.850
Parkinson's, Huntington's, and Spinocerebellar Disease, and Other Neurodegenerative Disorders	2.118	1.928	1.848	1.771	1.745
Seizure Disorders and Convulsions	1.578	1.411	1.321	1.229	1.199
Hydrocephalus	7.688	7.552	7.486	7.492	7.493
Non-Traumatic Coma, and Brain Compression/Anoxic Damage	9.265	9.102	9.022	9.026	9.025
Respirator Dependence/Tracheostomy Status	40.054	40.035	40.022	40.105	40.131
Respiratory Arrest	12.913	12.707	12.612	12.699	12.728
Cardio-Respiratory Failure and Shock, Including Respiratory Distress Syndromes	12.913	12.707	12.612	12.699	12.728
Heart Assistive Device/Artificial Heart	33.372	33.025	32.877	32.978	33.014
Heart Transplant	33.372	33.025	32.877	32.978	33.014
Congestive Heart Failure	3.790	3.648	3.587	3.591	3.594
Acute Myocardial Infarction	11.904	11.451	11.258	11.423	11.478
Unstable Angina and Other Acute Ischemic Heart Disease	6.369	6.001	5.861	5.912	5.935
Heart Infection/Inflammation, Except Rheumatic	6.770	6.611	6.537	6.530	6.528
Specified Heart Arrhythmias	3.363	3.193	3.112	3.063	3.046
Intracranial Hemorrhage	10.420	10.062	9.907	9.943	9.959
Ischemic or Unspecified Stroke	4.548	4.304	4.215	4.242	4.256
Cerebral Aneurysm and Arteriovenous Malformation	5.263	5.000	4.890	4.867	4.859
Hemiplegia/Hemiparesis	5.979	5.846	5.794	5.858	5.881
Monoplegia, Other Paralytic Syndromes	4.176	4.024	3.959	3.938	3.931
Atherosclerosis of the Extremities with Ulceration or Gangrene	11.941	11.801	11.745	11.844	11.876
Vascular Disease with Complications	8.228	7.996	7.896	7.922	7.932
Pulmonary Embolism and Deep Vein Thrombosis	4.853	4.642	4.549	4.539	4.537
Lung Transplant Status/Complications	31.457	31.161	31.030	31.131	31.161
Cystic Fibrosis	10.510	10.142	9.957	9.960	9.962
Chronic Obstructive Pulmonary Disease, Including Bronchiectasis	1.098	0.978	0.904	0.810	0.780
Asthma	1.098	0.978	0.904	0.810	0.780
Fibrosis of Lung and Other Lung Disorders	2.799	2.657	2.596	2.565	2.556
Aspiration and Specified Bacterial Pneumonias and Other Severe Lung Infections	9.052	8.934	8.883	8.913	8.924
Kidney Transplant Status	10.944	10.576	10.432	10.463	10.482
End Stage Renal Disease	37.714	37.356	37.193	37.352	37.403
Chronic Kidney Disease, Stage 5	2.189	2.048	1.995	1.990	1.992
Chronic Kidney Disease, Severe (Stage 4)	2.189	2.048	1.995	1.990	1.992
Ectopic and Molar Pregnancy, Except with Renal Failure, Shock, or Embolism	1.377	1.219	1.120	0.912	0.828
Miscarriage with Complications	1.377	1.219	1.120	0.912	0.828
Miscarriage with No or Minor Complications	1.377	1.219	1.120	0.912	0.828
Completed Pregnancy With Major Complications	3.778	3.285	3.134	2.931	2.906
Completed Pregnancy With Complications	3.778	3.285	3.134	2.931	2.906
Completed Pregnancy with No or Minor Complications	3.778	3.285	3.134	2.931	2.906
Chronic Ulcer of Skin, Except Pressure	2.515	2.371	2.313	2.304	2.304
Hip Fractures and Pathological Vertebral or Humerus Fractures	9.788	9.570	9.480	9.521	9.536
Pathological Fractures, Except of Vertebrae, Hip, or Humerus	1.927	1.805	1.735	1.648	1.620
Stem Cell, Including Bone Marrow, Transplant Status/Complications	30.944	30.908	30.893	30.917	30.928

TABLE 2—ADULT RISK ADJUSTMENT MODEL FACTORS—Continued

Factor	Platinum	Gold	Silver	Bronze	Catastrophic
Artificial Openings for Feeding or Elimination	11.093	10.939	10.872	10.943	10.965
Amputation Status, Lower Limb/Amputation Complications	7.277	7.087	7.009	7.056	7.073
Interaction Factors					
Severe illness × Opportunistic Infections	12.094	12.327	12.427	12.527	12.555
Severe illness × Metastatic Cancer	12.094	12.327	12.427	12.527	12.555
Severe illness × Lung, Brain, and Other Severe Cancers, Including Pediatric Acute Lymphoid Leukemia	12.094	12.327	12.427	12.527	12.555
Severe illness × Non-Hodgkin's Lymphomas and Other Cancers and Tumors	12.094	12.327	12.427	12.527	12.555
Severe illness × Myasthenia Gravis/Myoneural Disorders and Guillain-Barre Syndrome/Inflammatory and Toxic Neuropathy	12.094	12.327	12.427	12.527	12.555
Severe illness × Heart Infection/Inflammation, Except Rheumatic	12.094	12.327	12.427	12.527	12.555
Severe illness × Intracranial Hemorrhage	12.094	12.327	12.427	12.527	12.555
Severe illness × HCC group G06 (HCC Group 6 includes Myelodysplastic Syndromes and Myelofibrosis, and Aplastic Anemia)	12.094	12.327	12.427	12.527	12.555
Severe illness × HCC group G08 (HCC Group 8 includes Combined and Other Severe Immunodeficiencies, and Disorders of the Immune Mechanism)	12.094	12.327	12.427	12.527	12.555
Severe illness × End-Stage Liver Disease	2.498	2.648	2.714	2.813	2.841
Severe illness × Acute Liver Failure/Disease, Including Neonatal Hepatitis	2.498	2.648	2.714	2.813	2.841
Severe illness × Atherosclerosis of the Extremities with Ulceration or Gangrene	2.498	2.648	2.714	2.813	2.841
Severe illness × Vascular Disease with Complications	2.498	2.648	2.714	2.813	2.841
Severe illness × Aspiration and Specified Bacterial Pneumonias and Other Severe Lung Infections	2.498	2.648	2.714	2.813	2.841
Severe illness × Artificial Openings for Feeding or Elimination	2.498	2.648	2.714	2.813	2.841
Severe illness × HCC group G03 (HCC Group 3 includes Necrotizing Fasciitis and Bone/Joint/Muscle Infections/Necrosis)	2.498	2.648	2.714	2.813	2.841

TABLE 3—HHS HCCS IN THE SEVERE ILLNESS INDICATOR VARIABLE

Description
Septicemia, Sepsis, Systemic Inflammatory Response Syndrome/Shock.
Peritonitis/Gastrointestinal Perforation/Necrotizing Enter colitis.
Seizure Disorders and Convulsions.
Non-Traumatic Coma, Brain Compression/Anoxic Damage.
Respirator Dependence/Tracheostomy Status.
Respiratory Arrest.
Cardio-Respiratory Failure and Shock, Including Respiratory Distress Syndromes.
Pulmonary Embolism and Deep Vein Thrombosis.

TABLE 4—CHILD RISK ADJUSTMENT MODEL FACTORS

Factor	Platinum	Gold	Silver	Bronze	Catastrophic
Demographic Factors					
Age 2–4, Male	0.283	0.209	0.106	0.019	0.000
Age 5–9, Male	0.196	0.140	0.064	0.005	0.000
Age 10–14, Male	0.246	0.189	0.110	0.047	0.033
Age 15–20, Male	0.336	0.273	0.191	0.114	0.095
Age 2–4, Female	0.233	0.165	0.071	0.019	0.000
Age 5–9, Female	0.165	0.113	0.048	0.005	0.000
Age 10–14, Female	0.223	0.168	0.095	0.042	0.031
Age 15–20, Female	0.379	0.304	0.198	0.101	0.077
Diagnosis Factors					
HIV/AIDS	2.956	2.613	2.421	2.228	2.166
Septicemia, Sepsis, Systemic Inflammatory Response Syndrome/Shock	17.309	17.142	17.061	17.081	17.088

TABLE 4—CHILD RISK ADJUSTMENT MODEL FACTORS—Continued

Factor	Platinum	Gold	Silver	Bronze	Catastrophic
Central Nervous System Infections, Except Viral Meningitis	12.636	12.409	12.296	12.313	12.319
Viral or Unspecified Meningitis	3.202	3.004	2.896	2.750	2.702
Opportunistic Infections	20.358	20.262	20.222	20.201	20.189
Metastatic Cancer	34.791	34.477	34.307	34.306	34.300
Lung, Brain, and Other Severe Cancers, Including Pediatric Acute Lymphoid Leukemia	11.939	11.618	11.436	11.358	11.334
Non-Hodgkin's Lymphomas and Other Cancers and Tumors	9.354	9.071	8.908	8.806	8.774
Colorectal, Breast (Age < 50), Kidney, and Other Cancers	3.689	3.480	3.337	3.188	3.143
Benign/Uncertain Brain Tumors, and Other Cancers and Tumors [10]	3.308	3.084	2.954	2.814	2.769
Thyroid Cancer, Melanoma, Neurofibromatosis, and Other Cancers and Tumors	1.530	1.368	1.254	1.114	1.066
Pancreas Transplant Status/Complications	18.933	18.476	18.264	18.279	18.289
Diabetes with Acute Complications	2.629	2.354	2.198	1.904	1.799
Diabetes with Chronic Complications	2.629	2.354	2.198	1.904	1.799
Diabetes without Complication	2.629	2.354	2.198	1.904	1.799
Protein-Calorie Malnutrition	13.930	13.794	13.726	13.751	13.759
Mucopolysaccharidosis	6.177	5.867	5.696	5.642	5.625
Lipidoses and Glycogenosis	6.177	5.867	5.696	5.642	5.625
Congenital Metabolic Disorders, Not Elsewhere Classified	6.177	5.867	5.696	5.642	5.625
Amyloidosis, Porphyria, and Other Metabolic Disorders	6.177	5.867	5.696	5.642	5.625
Adrenal, Pituitary, and Other Significant Endocrine Disorders	6.177	5.867	5.696	5.642	5.625
Liver Transplant Status/Complications	18.322	18.048	17.922	17.898	17.888
End-Stage Liver Disease	12.960	12.754	12.650	12.622	12.614
Cirrhosis of Liver	1.177	1.027	0.920	0.871	0.833
Chronic Hepatitis	1.177	1.027	0.920	0.807	0.775
Acute Liver Failure/Disease, Including Neonatal Hepatitis	6.255	6.092	6.003	5.972	5.966
Intestine Transplant Status/Complications	106.169	106.704	106.991	107.180	107.222
Peritonitis/Gastrointestinal Perforation/Necrotizing Enterocolitis	16.784	16.360	16.156	16.171	16.179
Intestinal Obstruction	5.715	5.451	5.307	5.210	5.178
Chronic Pancreatitis	16.692	16.315	16.148	16.163	16.166
Acute Pancreatitis/Other Pancreatic Disorders and Intestinal Malabsorption	3.843	3.685	3.584	3.471	3.434
Inflammatory Bowel Disease	5.049	4.673	4.471	4.320	4.271
Necrotizing Fasciitis	5.829	5.551	5.398	5.318	5.292
Bone/Joint/Muscle Infections/Necrosis	5.829	5.551	5.398	5.318	5.292
Rheumatoid Arthritis and Specified Autoimmune Disorders	2.689	2.473	2.327	2.171	2.122
Systemic Lupus Erythematosus and Other Autoimmune Disorders	1.397	1.249	1.139	0.996	0.951
Osteogenesis Imperfecta and Other Osteodystrophies	1.536	1.410	1.311	1.211	1.183
Congenital/Developmental Skeletal and Connective Tissue Disorders	1.536	1.410	1.311	1.211	1.183
Cleft Lip/Cleft Palate	1.785	1.573	1.441	1.281	1.228
Hemophilia	46.388	45.839	45.551	45.541	45.535
Myelodysplastic Syndromes and Myelofibrosis	29.387	29.168	29.063	29.075	29.078
Aplastic Anemia	29.387	29.168	29.063	29.075	29.078
Acquired Hemolytic Anemia, Including Hemolytic Disease of Newborn	7.791	7.476	7.308	7.229	7.203
Sickle Cell Anemia (Hb-SS)	7.791	7.476	7.308	7.229	7.203
Thalassemia Major	7.791	7.476	7.308	7.229	7.203
Combined and Other Severe Immunodeficiencies	5.690	5.455	5.339	5.270	5.247
Disorders of the Immune Mechanism	5.690	5.455	5.339	5.270	5.247
Coagulation Defects and Other Specified Hematological Disorders	4.909	4.754	4.650	4.543	4.511
Drug Psychosis	4.067	3.816	3.693	3.596	3.566
Drug Dependence	4.067	3.816	3.693	3.596	3.566
Schizophrenia	5.536	5.127	4.916	4.775	4.730
Major Depressive and Bipolar Disorders	1.779	1.591	1.453	1.252	1.188
Reactive and Unspecified Psychosis, Delusional Disorders	1.779	1.591	1.453	1.252	1.188
Personality Disorders	0.935	0.832	0.723	0.511	0.441
Anorexia/Bulimia Nervosa	2.565	2.372	2.252	2.146	2.111
Prader-Willi, Patau, Edwards, and Autosomal Deletion Syndromes	3.606	3.347	3.239	3.201	3.189
Down Syndrome, Fragile X, Other Chromosomal Anomalies, and Congenital Malformation Syndromes	2.403	2.203	2.093	1.982	1.943
Autistic Disorder	1.673	1.500	1.372	1.177	1.112
Pervasive Developmental Disorders, Except Autistic Disorder	0.963	0.850	0.723	0.511	0.441
Traumatic Complete Lesion Cervical Spinal Cord	18.394	18.224	18.156	18.210	18.228
Quadriplegia	18.394	18.224	18.156	18.210	18.228
Traumatic Complete Lesion Dorsal Spinal Cord	18.394	18.224	18.156	18.210	18.228
Paraplegia	18.394	18.224	18.156	18.210	18.228
Spinal Cord Disorders/Injuries	4.668	4.416	4.287	4.181	4.150
Amyotrophic Lateral Sclerosis and Other Anterior Horn Cell Disease	14.484	14.155	13.995	13.958	13.954
Quadriplegic Cerebral Palsy	5.717	5.367	5.223	5.251	5.262
Cerebral Palsy, Except Quadriplegic	1.899	1.672	1.557	1.447	1.412
Spina Bifida and Other Brain/Spinal/Nervous System Congenital Anomalies	0.943	0.785	0.686	0.592	0.562

TABLE 4—CHILD RISK ADJUSTMENT MODEL FACTORS—Continued

Factor	Platinum	Gold	Silver	Bronze	Catastrophic
Myasthenia Gravis/Myoneural Disorders and Guillain-Barre Syndrome/Inflammatory and Toxic Neuropathy	5.301	5.071	4.950	4.861	4.832
Muscular Dystrophy	3.122	2.915	2.800	2.698	2.669
Multiple Sclerosis	5.370	4.996	4.806	4.769	4.752
Parkinson's, Huntington's, and Spinocerebellar Disease, and Other Neurodegenerative Disorders	3.122	2.915	2.800	2.698	2.669
Seizure Disorders and Convulsions	2.188	2.012	1.882	1.702	1.644
Hydrocephalus	6.791	6.630	6.550	6.521	6.513
Non-Traumatic Coma, and Brain Compression/Anoxic Damage	9.073	8.882	8.788	8.753	8.735
Respirator Dependence/Tracheostomy Status	34.717	34.532	34.471	34.623	34.668
Respiratory Arrest	14.998	14.772	14.669	14.691	14.696
Cardio-Respiratory Failure and Shock, Including Respiratory Distress Syndromes	14.998	14.772	14.669	14.691	14.696
Heart Assistive Device/Artificial Heart	25.734	25.262	25.057	25.189	25.225
Heart Transplant	25.734	25.262	25.057	25.189	25.225
Congestive Heart Failure	6.292	6.159	6.073	6.013	5.992
Acute Myocardial Infarction	4.568	4.453	4.410	4.433	4.448
Unstable Angina and Other Acute Ischemic Heart Disease	4.568	4.453	4.410	4.433	4.448
Heart Infection/Inflammation, Except Rheumatic	12.842	12.655	12.573	12.590	12.597
Hypoplastic Left Heart Syndrome and Other Severe Congenital Heart Disorders	7.019	6.823	6.668	6.528	6.480
Major Congenital Heart/Circulatory Disorders	2.257	2.143	2.018	1.870	1.828
Atrial and Ventricular Septal Defects, Patent Ductus Arteriosus, and Other Congenital Heart/Circulatory Disorders	1.411	1.319	1.206	1.078	1.047
Specified Heart Arrhythmias	4.483	4.276	4.141	4.052	4.026
Intracranial Hemorrhage	21.057	20.757	20.616	20.617	20.618
Ischemic or Unspecified Stroke	8.498	8.373	8.324	8.360	8.363
Cerebral Aneurysm and Arteriovenous Malformation	4.704	4.464	4.344	4.280	4.250
Hemiplegia/Hemiparesis	5.561	5.404	5.334	5.315	5.310
Monoplegia, Other Paralytic Syndromes	5.561	5.404	5.334	5.315	5.310
Atherosclerosis of the Extremities with Ulceration or Gangrene	10.174	9.937	9.799	9.688	9.641
Vascular Disease with Complications	11.571	11.355	11.257	11.260	11.272
Pulmonary Embolism and Deep Vein Thrombosis	13.894	13.661	13.557	13.591	13.604
Lung Transplant Status/Complications	100.413	100.393	100.412	100.660	100.749
Cystic Fibrosis	13.530	13.006	12.743	12.739	12.742
Chronic Obstructive Pulmonary Disease, Including Bronchiectasis	0.521	0.458	0.354	0.215	0.175
Asthma	0.521	0.458	0.354	0.215	0.175
Fibrosis of Lung and Other Lung Disorders	5.812	5.657	5.555	5.472	5.450
Aspiration and Specified Bacterial Pneumonias and Other Severe Lung Infections	10.730	10.615	10.549	10.566	10.571
Kidney Transplant Status	18.933	18.476	18.264	18.279	18.289
End Stage Renal Disease	43.158	42.816	42.659	42.775	42.808
Chronic Kidney Disease, Stage 5	11.754	11.581	11.472	11.374	11.340
Chronic Kidney Disease, Severe (Stage 4)	11.754	11.581	11.472	11.374	11.340
Ectopic and Molar Pregnancy, Except with Renal Failure, Shock, or Embolism	1.191	1.042	0.917	0.674	0.590
Miscarriage with Complications	1.191	1.042	0.917	0.674	0.590
Miscarriage with No or Minor Complications	1.191	1.042	0.917	0.674	0.590
Completed Pregnancy With Major Complications	3.419	2.956	2.778	2.498	2.437
Completed Pregnancy With Complications	3.419	2.956	2.778	2.498	2.437
Completed Pregnancy with No or Minor Complications	3.419	2.956	2.778	2.498	2.437
Chronic Ulcer of Skin, Except Pressure	1.570	1.479	1.394	1.314	1.289
Hip Fractures and Pathological Vertebral or Humerus Fractures	7.389	7.174	7.022	6.882	6.842
Pathological Fractures, Except of Vertebrae, Hip, or Humerus	2.353	2.244	2.128	1.965	1.912
Stem Cell, Including Bone Marrow, Transplant Status/Complications	30.558	30.485	30.466	30.522	30.538
Artificial Openings for Feeding or Elimination	14.410	14.247	14.197	14.340	14.383
Amputation Status, Lower Limb/Amputation Complications	10.174	9.937	9.799	9.688	9.641

[10] This HCC also includes Breast (Age 50+) and Prostate Cancer.

TABLE 5—INFANT RISK ADJUSTMENT MODELS FACTORS

Group	Platinum	Gold	Silver	Bronze	Catastrophic
Extremely Immature * Severity Level 5 (Highest)	393.816	392.281	391.387	391.399	391.407
Extremely Immature * Severity Level 4	225.037	223.380	222.424	222.371	222.365
Extremely Immature * Severity Level 3	60.363	59.232	58.532	58.247	58.181
Extremely Immature * Severity Level 2	60.363	59.232	58.532	58.247	58.181
Extremely Immature * Severity Level 1 (Lowest)	60.363	59.232	58.532	58.247	58.181
Immature * Severity Level 5 (Highest)	207.274	205.589	204.615	204.629	204.644
Immature * Severity Level 4	89.694	88.105	87.188	87.169	87.178
Immature * Severity Level 3	45.715	44.305	43.503	43.394	43.379
Immature * Severity Level 2	33.585	32.247	31.449	31.221	31.163
Immature * Severity Level 1 (Lowest)	33.585	32.247	31.449	31.221	31.163
Premature/Multiples * Severity Level 5 (Highest)	173.696	172.095	171.169	171.111	171.108
Premature/Multiples * Severity Level 4	34.417	32.981	32.155	31.960	31.925
Premature/Multiples * Severity Level 3	18.502	17.382	16.694	16.311	16.200
Premature/Multiples * Severity Level 2	9.362	8.533	7.967	7.411	7.241
Premature/Multiples * Severity Level 1 (Lowest)	6.763	6.144	5.599	4.961	4.771
Term * Severity Level 5 (Highest)	132.588	131.294	130.511	130.346	130.292
Term * Severity Level 4	20.283	19.222	18.560	18.082	17.951
Term * Severity Level 3	6.915	6.286	5.765	5.092	4.866
Term * Severity Level 2	3.825	3.393	2.925	2.189	1.951
Term * Severity Level 1 (Lowest)	1.661	1.449	0.998	0.339	0.188
Age1 * Severity Level 5 (Highest)	62.385	61.657	61.217	61.130	61.108
Age1 * Severity Level 4	10.855	10.334	9.988	9.747	9.686
Age1 * Severity Level 3	3.633	3.299	3.007	2.692	2.608
Age1 * Severity Level 2	2.177	1.930	1.665	1.320	1.223
Age1 * Severity Level 1 (Lowest)	0.631	0.531	0.333	0.171	0.137
Age 0 Male	0.629	0.587	0.574	0.533	0.504
Age 1 Male	0.117	0.102	0.094	0.065	0.054

TABLE 6—HHS HCCS INCLUDED IN INFANT MODEL MATURITY CATEGORIES

Maturity category	HCC/Description
Extremely Immature	Extremely Immature Newborns, Birthweight < 500 Grams.
Extremely Immature	Extremely Immature Newborns, Including Birthweight 500–749 Grams.
Extremely Immature	Extremely Immature Newborns, Including Birthweight 750–999 Grams.
Immature	Premature Newborns, Including Birthweight 1000–1499 Grams.
Immature	Premature Newborns, Including Birthweight 1500–1999 Grams.
Premature/Multiples	Premature Newborns, Including Birthweight 2000–2499 Grams.
Premature/Multiples	Other Premature, Low Birthweight, Malnourished, or Multiple Birth Newborns.
Term	Term or Post-Term Singleton Newborn, Normal or High Birthweight.
Age 1	All age 1 infants.

TABLE 7—HHS HCCS INCLUDED IN INFANT MODEL SEVERITY CATEGORIES

Severity category	HCC
Severity Level 5 (Highest)	Metastatic Cancer.
Severity Level 5	Pancreas Transplant Status/Complications.
Severity Level 5	Liver Transplant Status/Complications.
Severity Level 5	End-Stage Liver Disease.
Severity Level 5	Intestine Transplant Status/Complications.
Severity Level 5	Peritonitis/Gastrointestinal Perforation/Necrotizing Enterocolitis.
Severity Level 5	Respirator Dependence/Tracheostomy Status.
Severity Level 5	Heart Assistive Device/Artificial Heart.
Severity Level 5	Heart Transplant.
Severity Level 5	Congestive Heart Failure.
Severity Level 5	Hypoplastic Left Heart Syndrome and Other Severe Congenital Heart Disorders.
Severity Level 5	Lung Transplant Status/Complications.
Severity Level 5	Kidney Transplant Status.
Severity Level 5	End Stage Renal Disease.
Severity Level 5	Stem Cell, Including Bone Marrow, Transplant Status/Complications.
Severity Level 4	Septicemia, Sepsis, Systemic Inflammatory Response Syndrome/Shock.
Severity Level 4	Lung, Brain, and Other Severe Cancers, Including Pediatric Acute Lymphoid Leukemia.
Severity Level 4	Mucopolysaccharidosis.
Severity Level 4	Major Congenital Anomalies of Diaphragm, Abdominal Wall, and Esophagus, Age < 2.
Severity Level 4	Myelodysplastic Syndromes and Myelofibrosis.
Severity Level 4	Aplastic Anemia.
Severity Level 4	Combined and Other Severe Immunodeficiencies.

TABLE 7—HHS HCCs INCLUDED IN INFANT MODEL SEVERITY CATEGORIES—Continued

Severity category	HCC
Severity Level 4	Traumatic Complete Lesion Cervical Spinal Cord.
Severity Level 4	Quadriplegia.
Severity Level 4	Amyotrophic Lateral Sclerosis and Other Anterior Horn Cell Disease.
Severity Level 4	Quadriplegic Cerebral Palsy.
Severity Level 4	Myasthenia Gravis/Myoneural Disorders and Guillain-Barre Syndrome/Inflammatory and Toxic Neuropathy.
Severity Level 4	Non-Traumatic Coma, Brain Compression/Anoxic Damage.
Severity Level 4	Respiratory Arrest.
Severity Level 4	Cardio-Respiratory Failure and Shock, Including Respiratory Distress Syndromes.
Severity Level 4	Acute Myocardial Infarction.
Severity Level 4	Heart Infection/Inflammation, Except Rheumatic.
Severity Level 4	Major Congenital Heart/Circulatory Disorders.
Severity Level 4	Intracranial Hemorrhage.
Severity Level 4	Ischemic or Unspecified Stroke.
Severity Level 4	Vascular Disease with Complications.
Severity Level 4	Pulmonary Embolism and Deep Vein Thrombosis.
Severity Level 4	Aspiration and Specified Bacterial Pneumonias and Other Severe Lung Infections.
Severity Level 4	Chronic Kidney Disease, Stage 5.
Severity Level 4	Hip Fractures and Pathological Vertebral or Humerus Fractures.
Severity Level 4	Artificial Openings for Feeding or Elimination.
Severity Level 3	HIV/AIDS.
Severity Level 3	Central Nervous System Infections, Except Viral Meningitis.
Severity Level 3	Opportunistic Infections.
Severity Level 3	Non-Hodgkin's Lymphomas and Other Cancers and Tumors.
Severity Level 3	Colorectal, Breast (Age < 50), Kidney and Other Cancers.
Severity Level 3	Benign/Uncertain Brain Tumors, and Other Cancers and Tumors.[11]
Severity Level 3	Lipidoses and Glycogenosis.
Severity Level 3	Adrenal, Pituitary, and Other Significant Endocrine Disorders.
Severity Level 3	Acute Liver Failure/Disease, Including Neonatal Hepatitis.
Severity Level 3	Intestinal Obstruction.
Severity Level 3	Necrotizing Fasciitis.
Severity Level 3	Bone/Joint/Muscle Infections/Necrosis.
Severity Level 3	Osteogenesis Imperfecta and Other Osteodystrophies.
Severity Level 3	Cleft Lip/Cleft Palate.
Severity Level 3	Hemophilia.
Severity Level 3	Disorders of the Immune Mechanism.
Severity Level 3	Coagulation Defects and Other Specified Hematological Disorders.
Severity Level 3	Prader-Willi, Patau, Edwards, and Autosomal Deletion Syndromes.
Severity Level 3	Traumatic Complete Lesion Dorsal Spinal Cord.
Severity Level 3	Paraplegia.
Severity Level 3	Spinal Cord Disorders/Injuries.
Severity Level 3	Cerebral Palsy, Except Quadriplegic.
Severity Level 3	Muscular Dystrophy.
Severity Level 3	Parkinson's, Huntington's, and Spinocerebellar Disease, and Other Neurodegenerative Disorders.
Severity Level 3	Hydrocephalus.
Severity Level 3	Unstable Angina and Other Acute Ischemic Heart Disease.
Severity Level 3	Atrial and Ventricular Septal Defects, Patent Ductus Arteriosus, and Other Congenital Heart/Circulatory Disorders.
Severity Level 3	Specified Heart Arrhythmias.
Severity Level 3	Cerebral Aneurysm and Arteriovenous Malformation.
Severity Level 3	Hemiplegia/Hemiparesis.
Severity Level 3	Cystic Fibrosis.
Severity Level 3	Fibrosis of Lung and Other Lung Disorders.
Severity Level 3	Pathological Fractures, Except of Vertebrae, Hip, or Humerus.
Severity Level 2	Viral or Unspecified Meningitis.
Severity Level 2	Thyroid, Melanoma, Neurofibromatosis, and Other Cancers and Tumors.
Severity Level 2	Diabetes with Acute Complications.
Severity Level 2	Diabetes with Chronic Complications.
Severity Level 2	Diabetes without Complication.
Severity Level 2	Protein-Calorie Malnutrition.
Severity Level 2	Congenital Metabolic Disorders, Not Elsewhere Classified.
Severity Level 2	Amyloidosis, Porphyria, and Other Metabolic Disorders.
Severity Level 2	Cirrhosis of Liver.
Severity Level 2	Chronic Pancreatitis.
Severity Level 2	Inflammatory Bowel Disease.
Severity Level 2	Rheumatoid Arthritis and Specified Autoimmune Disorders.
Severity Level 2	Systemic Lupus Erythematosus and Other Autoimmune Disorders.
Severity Level 2	Congenital/Developmental Skeletal and Connective Tissue Disorders.
Severity Level 2	Acquired Hemolytic Anemia, Including Hemolytic Disease of Newborn.
Severity Level 2	Sickle Cell Anemia (Hb-SS).

TABLE 7—HHS HCCs INCLUDED IN INFANT MODEL SEVERITY CATEGORIES—Continued

Severity category	HCC
Severity Level 2	Drug Psychosis.
Severity Level 2	Drug Dependence.
Severity Level 2	Down Syndrome, Fragile X, Other Chromosomal Anomalies, and Congenital Malformation Syndromes.
Severity Level 2	Spina Bifida and Other Brain/Spinal/Nervous System Congenital Anomalies.
Severity Level 2	Seizure Disorders and Convulsions.
Severity Level 2	Monoplegia, Other Paralytic Syndromes.
Severity Level 2	Atherosclerosis of the Extremities with Ulceration or Gangrene.
Severity Level 2	Chronic Obstructive Pulmonary Disease, Including Bronchiectasis.
Severity Level 2	Chronic Ulcer of Skin, Except Pressure.
Severity Level 1 (Lowest)	Chronic Hepatitis.
Severity Level 1	Acute Pancreatitis/Other Pancreatic Disorders and Intestinal Malabsorption.
Severity Level 1	Thalassemia Major.
Severity Level 1	Autistic Disorder.
Severity Level 1	Pervasive Developmental Disorders, Except Autistic Disorder.
Severity Level 1	Multiple Sclerosis.
Severity Level 1	Asthma.
Severity Level 1	Chronic Kidney Disease, Severe (Stage 4).
Severity Level 1	Amputation Status, Lower Limb/Amputation Complications.
Severity Level 1	No Severity HCCs.

TABLE 8—R-SQUARED STATISTIC FOR HHS RISK ADJUSTMENT MODELS

Risk adjustment model	R-Squared statistic
Platinum Adult	0.360
Platinum Child	0.307
Platinum Infant	0.292
Gold Adult	0.355
Gold Child	0.302
Gold Infant	0.289
Silver Adult	0.352
Silver Child	0.299
Silver Infant	0.288
Bronze Adult	0.351
Bronze Child	0.296
Bronze Infant	0.289
Catastrophic Adult	0.350
Catastrophic Child	0.295

TABLE 8—R-SQUARED STATISTIC FOR HHS RISK ADJUSTMENT MODELS—Continued

Risk adjustment model	R-Squared statistic
Catastrophic Infant	0.289

c. Overview of the Payment Transfer Formula

In the proposed rule, we proposed to calculate risk adjustment transfers after the close of the applicable benefit year, following the completion of issuer risk adjustment data reporting.

Transfers are calculated at the geographic rating area level for each plan (HHS would calculate two separate transfer amounts for a plan that operates in two rating areas). In other words, the payment transfer formula would treat each rating area segment of enrollment as a separate plan for the purposes of calculating transfers. Payment transfer amounts would be aggregated at the issuer level (that is, at the level of the entity licensed by the State) such that each issuer would receive an invoice and a report detailing the basis for the net payment that would be made or the charge that would be owed. The invoice would also include plan-level risk adjustment information.

The payment transfer formula is based on the difference between two plan premium estimates: (1) A premium based on plan-specific risk selection; and (2) a premium without risk selection. Transfers are intended to bridge the gap between these two premium estimates:

Conceptually, the goal of payment transfers is to provide plans with payments to help cover their actual risk exposure beyond the premiums the plans would charge reflecting allowable rating and their applicable cost factors. In other words, payments would help cover excess actuarial risk due to risk selection. Both of these premium estimates are based on the State average premium. The payment transfer formula includes the following premium adjustment terms:

• Plan average risk score: Multiplying the plan average risk score by the State average premium shows how a plan's premium would differ from the State average premium based on the risk selection experienced by the plan.

• Actuarial value (AV): A particular plan's premium may differ from the State average premium based on the plan's cost-sharing structure, or AV. An AV adjustment is applied to the State average premium to account for relative differences between a plan's AV and the market average AV.

• Permissible rating variation: Plan rates may differ based on allowable age rating factors. The rating adjustment accounts for the impact of allowable rating factors on the premium that would be realized by the plan.

• Geographic cost differences: Differences in unit costs and utilization

[11] This HCC also includes Breast (Age 50+) and Prostate Cancer.

may lead to differences in the average premium between intra-State rating areas, holding other cost factors (for example, benefit design) constant. The geographic cost adjustment accounts for cost differences across rating areas.

- Induced demand: Enrollee spending patterns may vary based on the generosity of cost sharing. The induced demand adjustment accounts for greater utilization of health care services induced by lower enrollee cost sharing in higher metal level plans.

The State average premium is multiplied by these factors to develop the plan premium estimates used in the payment transfer formula. The factors are relative measures that compare how plans differ from the market average with respect to the cost factors (that is to say, the product of the adjustments is normalized to the market average product of the cost factors).

In the absence of these adjustments, transfers would reflect liability differences attributed to cost factors other than risk selection. For example, in the absence of the AV adjustment, a low AV plan with lower-risk enrollees would be overcharged because the State average premium would not be scaled down to reflect the fact that the plan's AV is lower than the average AV of plans operating in the market in the State.

The figure below shows how the State average premium, the plan average risk score, and other plan-specific cost factors are used to develop the two plan premium estimates that are used to calculate payment transfers:

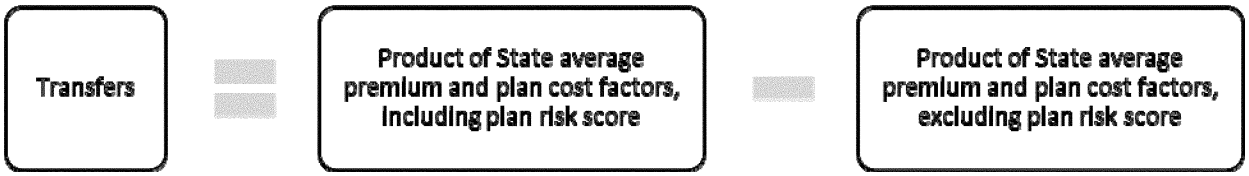

We are finalizing the payment transfer formula as proposed, with several technical corrections. We clarify that IDF stands for induced demand factor in the equations, and modify the denominator of the plan average premium formula within the State average premium and geographic cost factor calculations to reflect the billable member calculation. Therefore, the 2014 HHS risk adjustment payment transfer formula is:

$$T_i = \left[\frac{PLRS_i \cdot IDF_i \cdot GCF_i}{\sum_i (s_i \cdot PLRS_i \cdot IDF_i \cdot GCF_i)} - \frac{AV_i \cdot ARF_i \cdot IDF_i \cdot GCF_i}{\sum_i (s_i \cdot AV_i \cdot ARF_i \cdot IDF_i \cdot GCF_i)}\right] \bar{P}_s$$

Where:
$\bar{P}_s$= State average premium;
$PLRS_t$ = plan i's plan liability risk score;
AV_i= plan i's metal level AV;
ARF_i= plan i's allowable rating factor;
IDF_i = plan i's induced demand factor;
GCF_i = plan i's geographic cost factor;
s_i = plan i's share of State enrollment;
and the denominator is summed across all plans in the risk pool in the market in the State.

Risk adjustment transfers will be calculated at the risk pool level. Each State will have a risk pool for all of its metal-level plans. Catastrophic plans will be treated as a separate risk pool for purposes of risk adjustment. Individual and small group market plans will either be pooled together or treated as separate risk pools, depending on how the State treats these pools under the single risk pool provisions.

The payment transfer formula provides a per member per month (PMPM) transfer amount for a plan within a rating area. The PMPM transfer amount derived from the payment transfer formula (T_{PMPM}) will be multiplied by each plan's rating area billable member months ($\Sigma_b M_b$) to calculate the plan's total risk adjustment payment for a given rating area (T_i).

$$T_i = T_{PMPM} * \sum_b M_b$$

Comment: We received a number of comments in support of the general approach to calculating payment transfers, including HHS's approach to adjusting for plan cost factors in the transfer equation.

Response: We are finalizing the payment transfer formula as proposed with minor technical corrections, specified below.

Comment: We received one comment requesting that HHS clarify the calculation of payment transfers at the plan level.

Response: Because we have proposed and are finalizing a geographic cost factor, transfers must be calculated for each rating area in which a plan operates. However, we note that, because the denominator of each term of the payment transfer equation is the Statewide average of the product of the terms, transfers occur within the risk pool within the market within the State.

Comment: We received one comment requesting that HHS provide detailed examples of the payment transfer formula.

Response: We anticipate working closely with issuers and other stakeholders to provide examples of the payment transfer formula and its application in a market.

(1) State Average Premium

We proposed a payment transfer formula that is based on the State average premium for the applicable market. Plan average premiums will be calculated from the actual premiums charged to their enrollees, weighted by the number of months enrolled. We make a technical correction to the formula to calculate PMPM plan average premiums, as described below. The equations for calculating State average premiums were proposed as:

$$\overline{P_s} = \sum_i s_i^s \overline{P_i}$$

and

$$\overline{P_i} = \frac{\sum_s (M_s \cdot P_s)}{\sum_s M_s}$$

The first equation calculates the State average premium $\overline{P_s}$ as the average of individual plan averages, $\overline{P_i}$ weighted by each plan's share of Statewide enrollment in the risk pool in the market, s_i^s (based on billable member months).

The second equation shows the proposed formula to calculate plan average premiums. The proposed formula, which we are modifying as described below, was the weighted mean over all subscribers *s* of subscriber premiums P_s, with M_s representing the number of billable member months of enrollment for each subscriber *s*. Due to a typographical error and to align with the calculation of plan average risk score, we have modified the denominator of the plan average premium equation from the proposed rule. The denominator in the revised formula is equal to the sum of the billable member months for all billable members *b* enrolled in the plan. The numerator of this formula remains unchanged from the proposed rule. The numerator is equal to the product of each subscriber's billable member months (the billable member months attributed to the individual that is the policy subscriber) and the average monthly premium for the subscriber, summed across all of the subscribers *s* in the plan. The calculation of each plan's total premium revenue—the numerator of this formula—uses subscriber-level premiums in order to align with the way that premium information will be captured in data on issuers' distributed data environments. The final formula is:

$$\overline{P_i} = \frac{\sum_s (M_s \cdot P_s)}{\sum_b M_b}$$

Billable member months are defined as the number of months during the risk adjustment period billable members are enrolled in the plan (billable members exclude children who do not count towards family rates). In non-community rated States, issuers are required to individually rate each member covered under a family policy and, in the case of large families, issuers are only allowed to include the three oldest children in the development of family rates. Therefore, for large families, only the three oldest children are counted as billable members in the risk adjustment transfer formula. In community rated States that require family tiering, the number of billable members under a family policy may vary based on the State's tiering structure. For example, if a State's largest family tier is set at two or more children, only the first two children under the family policy would count as billable members. HHS will assess each State's rating requirements and will provide community rated States with additional details on how billable members will be counted in the transfer formula.

Comment: We received a number of comments in support of our proposal to use the State average premium as the basis for risk adjustment transfers. One commenter suggested that use of a plan's own premium may cause unintended distortions in the transfer formula. One commenter suggested that we use net claims, or approximate net claims by using 90 percent of the State average premium, as the basis for risk adjustment transfers.

Response: The goal of the payment transfer formula is, to the extent possible, to promote risk-neutral premiums. We agree with commenters that use of a plan's own premium may cause unintended distortions in transfers. We also believe that both claims and administrative costs include elements of risk selection, and therefore, that transfers should be based on the entire premium. We are finalizing our proposal to base the payment transfer formula on the State average premium.

(2) Plan Average Risk Score

The proposed plan average risk score calculation included an adjustment to account for the family rating rules set forth in the Market Reform Rule, which limits the number of dependent children in non-community rated States that count toward the build-up of family rates to three. The formula below shows the final plan average risk score calculation including the risk of all members on the policy, including those children not included in the premium.

$$PLRS_i = \frac{\sum_e M_e \cdot PLRS_e}{\sum_b M_b}$$

Where:

$PLRS_i$ is plan *i*'s average plan liability risk score, the subscript *e* denotes each enrollee within the plan;

$PLRS_e$ is each enrollee's individual plan liability risk score;

M_e is the number of months during the risk adjustment period the enrollee is enrolled in the plan; and

M_b is the number of months during the risk adjustment period the billable member *b* is enrolled in the plan (billable members exclude children who do not count towards family rates).

We received the following comments regarding the calculation of the plan average risk score:

Comment: We received comments in support of this approach to calculating plan average risk score. We received one comment that calculating plan average risk score with an adjustment for billable members would be administratively burdensome for issuers.

Response: We are finalizing this term as proposed. We note that, when HHS is operating risk adjustment on behalf of the State, HHS will calculate the plan average risk score and so there will be no additional administrative burden for issuers.

(3) Actuarial Value (AV)

The proposed AV adjustment in the payment transfer formula accounts for relative differences in plan liability due to differences in AV. Table 9 shows the AV adjustment that will be used for

each category of metal level plans. We received no comments on this adjustment, and are finalizing this provision as proposed.

TABLE 9—ACTUARIAL VALUE (AV) ADJUSTMENT USED FOR EACH METAL LEVEL IN THE PAYMENT TRANSFER FORMULA

Metal level	AV Adjustment
Catastrophic	0.57
Bronze	0.60
Silver	0.70
Gold	0.80
Platinum	0.90

(4) Allowable rating variation

We proposed an allowable rating factor adjustment in the payment transfer formula. The Allowable Rating Factor (ARF) adjustment accounts only for age rating. Tobacco use, wellness discounts, and family rating requirements will not be included in the payment transfer formula. Geographic cost variation is treated as a separate adjustment in the payment transfer formula. We recognize that there may be special rating circumstances in States (for example, community rating) and we intend to clarify how the payment transfer formula will address these circumstances through future rulemaking or guidance. We received comments in support of the allowable rating variation adjustment, and are finalizing this provision as proposed.

TABLE 10—EXAMPLE ALLOWABLE RATING FACTOR CALCULATION

Age band	State age-rating curve	Enrollment percentages (Share of member-months)			
		Plan A	Plan B	Plan C	State
21	1.000	33.30 percent	40.00 percent	10.00 percent	31.70 percent
(Age bands from 22–39 omitted)					
40	1.278	33.30 percent	40.00 percent	20.00 percent	33.30 percent
(Age bands from 41–63 omitted)					
64 and older	3.000	33.30 percent	20.00 percent	70.00 percent	35.00 percent
Total member-months		300,000	200,000	100,000	600,000
Allowable Rating Factor		1.758	1.511	2.456	1.793

(5) Induced demand

We proposed to use the same induced demand factors in the payment transfer formula, shown in Table 11. We received the following comments regarding the induced demand proposed provisions:

Comment: We received comments that, due to a typographical error, the definition of the induced demand factor expressed in the full payment transfer formula in the proposed rule was ''plan i's allowable rating factor'' rather than ''plan i's induced demand factor.''

Response: We have made this change in the equation above.

TABLE 11—INDUCED DEMAND ADJUSTMENT USED FOR EACH METAL LEVEL IN THE PAYMENT TRANSFER FORMULA

Metal level	Induced demand adjustment
Catastrophic	1.00
Bronze	1.00
Silver	1.03
Gold	1.08
Platinum	1.15

(6) Geographic Area Cost Variation

The proposed geographic cost factor (GCF) is an adjustment in the payment transfer formula because there are some plan costs—such as input prices or utilization rates—that vary geographically and are likely to affect plan premiums. GCFs will be calculated for each rating area established by the State under § 147.102(b). These factors will be calculated based on the observed average silver plan premium for the metal-level risk pool (calculated separately for individual and small group if the State does not have a merged market) or catastrophic plan premium for the catastrophic risk pool, in a geographic area relative to the Statewide average silver or catastrophic plan premium. Calculation of the GCF involves three steps. First, the average premium is computed for each silver or catastrophic plan, as applicable, in each rating area (using the same formula that is used to compute plan premiums in the State average premium calculation discussed above). We note that the same modification described above regarding the calculation of the plan average premium also applies to this term. The proposed calculation was:

$$\overline{P_i} = \frac{\sum_s (M_s \cdot P_s)}{\sum_s M_s}$$

Where:

$\overline{P}_i$, is the average premium for plan *i;*

s indexes all subscribers enrolled in the plan;

M_s is the number of billable member months for billable members under the policy of subscriber *s;* and

P_s is the premium for subscriber *s.*

The final calculation is:

$$\overline{P_i} = \frac{\sum_s (M_s \cdot P_s)}{\sum_b M_b}$$

Where:

$\overline{P}_i$, is the average premium for plan *i;*

s indexes all subscribers enrolled in the plan;

M_s is the number of billable member months for the subscriber *s;*

P_s is the premium for subscriber *s;* and

M_b is the number of billable members *b* enrolled in the plan.

The second step is to generate a set of plan average premiums that standardizes the premiums for age rating. Plan premiums are standardized for age by dividing the average plan premium by the plan rating factor (calculated at the rating area level), the enrollment-weighted rating factor applied to all billable members (discussed above). This formula is:

$$\overline{P_i}^{AS} = \overline{P_i}/(ARF_i)$$

Where:

$\overline{P}_i^{AS}$ is plan *i*'s age standardized average premium;

$\overline{P}_i$, is the average premium for plan *i;* and

ARF_i is the allowable rating factor.

The third and final step is to compute a GCF for each area in each risk pool and assign it to all plans in that area. This is accomplished with the following calculation:

$$GCF_i = \left(\sum_{area} s_i^a \cdot \overline{P}_i^{AS}\right) \Big/ \left(\sum_{state} s_i^s \cdot \overline{P}_i^{AS}\right)$$

This equation divides the enrollment-weighted average of standardized silver-level plan premiums in a geographic area by the average of those premiums Statewide. The numerator's summation is over all silver-level plans within plan i's geographic area, so $\sum_{area} s_i^a = 1$. Similarly, the summation in the denominator is over all silver-level plans in the State, so $\sum_{state} s_i^s = 1$.

With the exception of the plan average risk score calculation discussed above, all of the other calculations used in the payment transfer formula are based on billable members (that is, children who do not count toward family policy premiums are excluded). Member months, the State average premium, the allowable rating factor, and the geographic cost factor are all calculated based on billable members.

Comment: We received one comment requesting that HHS include a geographic cost adjustment even if the State elected to use one rating area. Another commenter suggested that HHS include an adjustment in the risk adjustment methodology that accounts for the increased cost of providing care in rural areas.

Response: The purpose of the geographic cost adjustment is to remove differences in premium due to allowable geographic rating variation. We believe that the cost of care in a particular area are reflected in premiums, and therefore captured in the geographic cost factor adjustment. Issuers of plans in a State with a single rating area would not vary rates within the State based on geography, and so it would not be necessary to remove differences in premiums due to allowed rating variation based on geography.

d. Overview of the Data Collection Approach

In § 153.20, we proposed a technical correction to the definition of risk adjustment data collection approach. We proposed to delete ''and audited'' so that the definition of risk adjustment data collection approach means ''the specific procedures by which risk adjustment data is to be stored, collected, accessed, transmitted, validated and the applicable timeframes, data formats, and privacy and security standards.'' We received no comments on the proposed technical correction to the definition of data collection approach, and are finalizing the provision as proposed. Comments regarding the data collection approach for the risk adjustment program are addressed in section III.G. of this final rule.

We also proposed to modify § 153.340(b)(3) by adding the additional restriction that ''Use and disclosure of personally identifiable information is limited to those purposes for which the personally identifiable information was collected (including for purposes of data validation).'' ''Personally identifiable information'' is a broadly used term across Federal agencies, and has been defined in the Office of Management and Budget Memorandum M–07–16 (May 22, 2007).[12] This addition will further ensure the privacy and security of potentially sensitive data by limiting the use or disclosure of any personally identifiable information collected as a part of this program. We received no comments on the proposed modification and are finalizing the provision as proposed.

e. Schedule for Risk Adjustment

Under § 153.610(a), issuers of risk adjustment covered plans will provide HHS with risk adjustment data in the form and manner specified by HHS. Under the HHS-operated risk adjustment program, issuers will not send, but must make available to HHS, anonymized claims and enrollment data, as specified in section III.G. of this final rule, for benefit year 2014 beginning January 1, 2014. Enrollee risk scores will be calculated based on enrollee enrollment periods and claims dates of discharge that occur between January 1, 2014 and December 31, 2014. Enrollee risk scores for subsequent benefit years will be calculated based on claims and enrollment periods for that same benefit year.

As set forth in the proposed § 153.730, claims to be used in the risk score calculation must be made available to HHS by April 30 of the year following the benefit year. We believe this date provides for ample claims run-out to ensure that diagnoses for the benefit year are captured, while providing HHS sufficient time to run enrollee risk score, plan average risk, and payments and charges calculations and meet the June 30 deadline described at the redesignated § 153.310(e). Comments in response to the proposed § 153.730 are addressed in section III.G of this final rule.

Comment: We received a number of comments that HHS should provide issuers with interim reports of risk scores and other information.

Response: We are committed to implementing the risk adjustment program in a transparent way, and seek to provide issuers with the information necessary for program operations and rate development. We are assessing the feasibility of providing program information prior to the close of the benefit year.

4. State Alternate Methodology

a. Technical Correction

The Premium Stabilization Rule established standards for States that establish their own risk adjustment programs. Under the proposed revision to § 153.310, a State may establish a risk adjustment program if it elects to operate an Exchange and is approved to operate risk adjustment in the State. If a State does not meet the requirements to operate risk adjustment, HHS will carry out all functions of risk adjustment on behalf of the State. In

[12] Available at: *http://www.whitehouse.gov/sites/default/files/omb/memoranda/fy2007/m07-16.pdf.*

§ 153.320(a), we established that Federally certified methodologies must be used in the operation of the risk adjustment program, and defined the process by which a methodology may become Federally certified. We proposed to modify § 153.320(a)(1) and (a)(2) to clarify that these methodologies must be published in ''the applicable annual'' notice of benefit and payment parameters as opposed to ''an annual'' HHS notice of benefit and payment parameters. This proposed change makes clear that methodologies must be certified for use each year. We did not receive any comments on this proposed change, and will finalize it as proposed.

b. State Alternate Risk Adjustment Methodology Evaluation Criteria

In § 153.330(a), we specified the elements required to be included with the request to HHS for certification of an alternate risk adjustment methodology. Section 153.330(a)(1)(i) states that a request for certification for an alternate methodology must include the elements specified in § 153.320(b), which includes a complete description of: (1) The risk adjustment model; (2) the calculation of plan average actuarial risk; (3) the calculation of payments and charges; (4) the risk adjustment data collection approach; and (5) the schedule for the risk adjustment program. Section 153.330(a)(1)(ii) states that the alternate methodology request must also include the calibration methodology and frequency of calibration, and § 153.330(a)(1)(iii) provides that the request must include statistical performance metrics specified by HHS. Section 153.330(a)(2) requires that the request also include certain descriptive and explanatory information relating to the alternate methodology. We proposed to evaluate risk adjustment methodologies based on the information submitted under § 153.330(a). We proposed additional evaluation criteria to certify alternate risk adjustment methodologies in a new paragraph § 153.330(b).

In the new § 153.330(b)(1), we proposed to consider whether the alternate risk adjustment methodology meets criteria that correspond to the elements of the alternate methodology request described in paragraph § 153.330(a)(1) and (2). Specifically, we stated that we would be evaluating the extent to which an alternate risk adjustment methodology:

(i) Explains the variation in health care costs of a given population;

(ii) Links risk factors to daily clinical practices and is clinically meaningful to providers;

(iii) Encourages favorable behavior among providers and health plans and discourages unfavorable behavior;

(iv) Uses data that is complete, high in quality, and available in a timely fashion;

(v) Is easy for stakeholders to understand and implement;

(vi) Provides stable risk scores over time and across plans; and

(vii) Minimizes administrative costs.

For example, to determine the extent that an alternate methodology explains the variation in health care costs of a given population, we would consider whether the risk adjustment model was calibrated from data reflecting the applicable market benefits, was calibrated on a sample that is reasonably representative of the anticipated risk adjustment population, and was calibrated using a sufficient sample to ensure stable weights across time and plans. In addition, in evaluating this criterion, we would consider whether the methodology has suitably categorized the types of plans subject or not subject to risk adjustment, given the overall approach taken by the methodology and the goal of the program to account for plan average actuarial risk. States must provide a rationale for the methodology's approach to the plans subject to risk adjustment. Under this proposed criteria, we would also evaluate the State's method for calculating payments and charges.

In the proposed § 153.330(b)(2), we would consider whether the alternate methodology complies with the requirements of subpart D, especially § 153.310(e) (as proposed to be renumbered) and § 153.340. Section 153.310(e) requires alternate methodologies to have a schedule that provides annual notification to issuers of risk adjustment covered plans of payments and charges by June 30 of the year following the benefit year. Section 153.340(b)(1) sets forth a number of minimum requirements for data collection under risk adjustment, including standards relating to data privacy and security. While the Federal approach will not directly collect data from issuers, but instead will use a distributed approach that will not include personally identifiable information, the Premium Stabilization Rule gave States the flexibility to design their own data collection approach, provided privacy and security standards are met. The privacy and security of enrollees' data is of paramount importance to HHS, and the data collection approach in an alternate methodology must protect personally identifiable information, if any, that is stored, transmitted, or analyzed, to be certified. The application for certification of the alternate methodology should identify which data elements contain personally identifiable information, and should specify how the State would meet these data and privacy security requirements.

In § 153.330(b)(3), we proposed to consider whether the alternate risk adjustment methodology accounts for payment transfers across metal levels. We believe that sharing risk across metal levels is a critical part of a risk adjustment methodology as new market reforms are implemented because of the need to mitigate adverse selection across metal levels, as well as within metal levels. The proposed HHS risk adjustment methodology transfers funds between plans across metal levels, and under this proposal, State alternate methodologies would do so as well.

Under the proposed HHS risk adjustment methodology, we will apply risk adjustment to catastrophic plans in their own risk pool—that is, we will transfer funds between catastrophic plans, but not between catastrophic plans and metal level plans. For a number of plans, such as student health plans and plans not subject to the market reform rules, we will not transfer payments under the HHS risk adjustment methodology. However, as discussed above, we believe that States should have the flexibility to submit a methodology that transfers funds between these types of plans (either in their own risk pool or with the other metal levels).

In § 153.330(b)(4), we proposed to consider whether the elements of the alternate methodology align with each other. For example, the data collected through the data collection approach should align with the data required by the risk adjustment model to calculate individual risk scores.

Comment: A commenter requested further clarity on § 153.330(a)(2)(iii), which requires that a State's request to operate an alternate methodology must include an assessment of the extent to which the methodology encourages favorable behavior among providers and discourages unfavorable behavior.

Response: We provided examples of favorable and unfavorable behavior in the proposed rule, at 77 FR at 73146. There, we stated that we would consider whether the alternate methodology discriminates against vulnerable populations, as evidenced by unjustified differential treatment on the basis of features like age, disability, or expected length of life. We also stated that alternate methodologies should take into account the health care needs of

diverse segments of the risk adjustment population, including but not limited to women, children, people with disabilities, and other vulnerable groups. We will provide further guidance on these criteria in connection with our evaluation of particular proposed State alternate methodologies.

Comment: A commenter requested that HHS delete the reference to ''stakeholders'' in the criterion that an alternate methodology be easy to understand and replace it with the term ''carriers.''

Response: Risk adjustment affects the overall stability of State insurance markets, with potential impacts on many individuals and entities, including State governments and enrollees. Therefore, we believe the methodology should be reasonably comprehensible to all enrollees and entities, or ''stakeholders.'' We will maintain our use of ''stakeholders'' rather than ''carriers'' because we believe that all affected individuals should be reasonably able to understand the methodology.

Comment: A commenter requested that HHS approve alternate methodologies independent of a State's factor weights.

Response: An alternate methodology's factor weights may influence the risk adjustment methodology's ability to meet the evaluation criteria. The factor weights, therefore, will be included in the evaluation process.

Comment: A commenter generally supported our alternate methodology certification process, but recommended that we additionally require that a State's proposed alternate methodology must perform similarly to or better than the HHS methodology in that State.

Response: We believe it would be difficult to assess whether a State's methodology performs ''better'' than the HHS methodology in light of the various policy goals that different States may have in mind. We believe that States understand their markets well, and that the proposed set of criteria is sufficiently detailed to achieve a high quality risk adjustment methodology. Therefore, we are finalizing these criteria as proposed.

Comment: A commenter recommended that State alternate methodology applications be made available to the public.

Response: HHS is committed to transparency in its process of evaluating and certifying State alternate methodologies. We will publish approved State alternate methodologies in the annual HHS notice of benefit and payment parameters. Because we require that States publish their alternate methodologies in the State notice of benefit and payment parameters, we believe that this publication is sufficient for public access to the methodology itself and other supporting information.

c. Payment and Charges

In the preamble to the Premium Stabilization Rule, we noted that we plan to establish a national method for calculation of payments and charges. In the proposed rule, we expanded on this approach by designating areas of State flexibility within the general approach to payment transfers. We received no comments on the national method for calculating payments and charges or the State flexibility within this method. We are finalizing this approach as proposed.

5. Risk Adjustment Data Validation

We proposed to add a new subsection, § 153.630, which set forth risk adjustment data validation standards applicable to all issuers of risk adjustment covered plans when HHS is operating risk adjustment. We proposed that, beginning in 2014, HHS will conduct a six-stage data validation program when operating risk adjustment on behalf of a State: (1) Sample selection; (2) initial validation audit; (3) second validation audit; (4) error estimation; (5) appeals; and (6) payment adjustments. We noted that States are not required to adopt this HHS data validation methodology. We are finalizing these provisions as proposed.

Comment: We received a comment asking that the cost of the audits associated with data validation be paid for by the Federal government.

Response: At this time, it is the policy of HHS that costs related to the second validation audit process be borne by the Federal government, while costs associated with initial validation audit process be borne by the applicable issuer. We note that a State may choose to allocate the costs of data validation differently when operating its own risk adjustment program.

Comment: We received a comment requesting that data validation requirements be expressed in § 153.710(c), relating to data collection standards.

Response: We are finalizing the data validation requirements in § 153.630. We believe that the data validation requirements should remain independent of the data collection standards because the data validation requirements are specific to the HHS-operated risk adjustment program and the data collection standards apply to both the risk adjustment and reinsurance programs when operated by HHS.

Comment: We received a comment expressing concern that the data validation process as described will extend beyond a year, potentially affecting payment transfers.

Response: We appreciate the concerns of the commenter. We intend to complete the data validation process within one year, in time for payment adjustments to be made the following benefit year.

Comment: We received a comment asking that States operating risk adjustment programs be required to follow uniform Federal data validation standards, particularly during the first few years of the program.

Response: The risk adjustment program is intended to be a State-based program. We believe that a State operating its own risk adjustment program should have the flexibility to implement a data validation program that best complements its program design, including the State's data collection approach and desired level of audit complexity. We note, however, that States and issuers still must abide by the standards for developing a data validation program as described in the Premium Stabilization Rule.

Comment: We received a comment requesting clarification on how issuers that leave a market during the year will affect the Statewide data validation process.

Response: We will provide further detail on this and other data validation issues in future rulemaking and guidance.

a. Data Validation Process When HHS Operates Risk Adjustment

(1) Sample Selection

In § 153.630 of the proposed rule, we discussed some of the guidelines for selecting a statistically valid sample for data validation. We proposed that HHS would choose an adequate sample size of enrollees such that the estimated payment errors would be statistically sound and enrollee-level risk score distributions would reflect enrollee characteristics for each issuer. Additionally, the sample would cover applicable subpopulations for each issuer, such as enrollees with and without risk adjustment diagnoses.

Comment: We received a comment asking for additional information on the statistical validity of the expected sample size of 300, including the confidence interval and expected error rate tolerance. We also received numerous comments requesting the opportunity to comment on a proposed

statistical selection methodology in future guidance.

Response: We anticipate providing more detailed information on the HHS sampling methodology in future rulemaking and guidance, including sample sizes and expected tolerances and confidence intervals.

Comment: We received a comment expressing support for the inclusion of enrollees both with and without risk adjustment diagnoses in the sample. The commenter also suggested that HHS conduct more comprehensive audits for members without any risk adjustment diagnoses, including full medical record review during the second validation audit.

Response: Individuals without risk adjustment diagnoses will be subject to audits of their demographic information as well as medical record reviews during both the initial and second validation audits to determine whether any risk adjustment HCCs should have been assigned that were not. We anticipate revisiting this policy after the first year of the program to assess the utility of performing medical record reviews on enrollees with no HCCs. Over time, we anticipate that issuers will utilize the front-end HHS-operated data submission processes to ensure they are providing all relevant risk adjustment diagnosis for enrollees as opposed to relying on back-end audit processes to reveal this information.

(2) Initial Validation Audit

In § 153.630(b), we proposed that once the audit samples are selected by HHS, issuers would conduct independent audits of the risk adjustment data for their initial validation audit sample enrollees. In § 153.630(b)(1), we proposed that issuers of risk adjustment covered plans engage one or more auditors to conduct these independent initial validation audits. We proposed in § 153.630(b)(2) through (4) that issuers ensure that initial validation auditors are reasonably capable of performing the audit, the audit is completed, the auditor is free from conflicts of interest, and the auditor submits information regarding the initial validation audit to HHS in the manner and timeframe specified by HHS. These proposed requirements would ensure the initial validation audit is conducted according to minimum audit standards, and issuers or auditors transmit necessary information to HHS for use in the second validation audit. We are finalizing these provisions as proposed.

We also proposed that issuers conduct data validation in accordance with audit standards established by HHS. We described three methods for establishing these audit standards, and requested comment on these approaches.

Comment: We received multiple comments suggesting that auditors conduct interim checks of issuer data during the plan year before the formal validation audit. We received a few comments proposing that auditors report the findings of the interim checks to HHS so that issuers found to have outlier results could be subject to greater audit scrutiny.

Response: We believe that requiring auditors to perform multiple interim checks of issuer data throughout the plan year will be burdensome for issuers. However, an issuer may voluntarily have such checks performed if it believes them to be necessary for appropriate implementation of risk adjustment and compliance.

Comment: We received a comment asking that HHS specify in future guidance the common coding and documentation standards that issuers will be subject to, and provide issuers an opportunity to comment on the standards.

Response: We will clarify in future rulemaking and guidance the uniform audit standards that issuers and auditors will be subject to.

Comment: We received many comments supporting a certification requirement for auditor firms before acting as a validation auditor. A number of commenters supported the development of audit standards. One commenter supported HHS adopting both approaches.

Response: We considered prospectively certifying entities prior to acting as validation auditors. This approach is utilized before performing audits on organizations collecting and reporting performance measures through Health Effectiveness Data and Information Set (HEDIS). While this approach may ensure that entities performing validation audits are capable of conducting the audits in accordance with HHS standards, we believe at this time that issuers will be diligent in selecting audit entities capable of complying with HHS audit standards, and that adequate enforcement remedies exist should an audit entity fail to comply with the standards. We will monitor the performance of validation auditors to determine whether such certification or additional safeguards are necessary in the future.

(3) Second Validation Audit

In § 153.630(c), we proposed that HHS retain an independent second validation auditor to verify the accuracy of the findings of the initial validation audit using a sub-sample of the initial validation audit sample enrollees for review. Issuers would submit (or ensure their initial validation auditor submits) data validation information, as specified by HHS, from their initial validation audit for each enrollee included in the second validation audit sub-sample. We are finalizing these provisions as proposed.

Comment: We received a comment suggesting that HHS provide, for both the initial and secondary validation audits, a comparison of a plan's diagnosis reporting accuracy to the calibration data set for the risk adjustment models' diagnosis accuracy as reported through MarketScan®.

Response: We do not have access to the underlying medical records necessary to perform such an audit for the calibration data set. We will consider performing similar analyses in future years, as more data becomes available.

Comment: We received a comment seeking clarity on whether the error process would be based exclusively on the second validation audit, and whether the results of the second validation audit would be applied only to the subsample under § 153.630(c).

Response: We anticipate applying any error rate determined by the second validation audit to the error rate calculated by the initial validation audit. This reconciled error rate will be extrapolated to an issuer's entire risk adjusted population, not just the subsample under § 153.630(c). We intend to consult with stakeholders on the details of the methodology for error rate calculation to inform future rulemaking.

Comment: We received a comment asking HHS to permit issuers to submit additional information to the second validation auditor if the initial information provided to the initial validation auditor does not meet the proposed audit standards.

Response: We do not believe that it is appropriate or efficient to permit issuers to submit additional information to the second validation auditor in the event that the initial information provided does not meet the proposed audit standards. We believe that limiting the review of the second validation audit to only that information made available during the initial validation will help to ensure the entire validation process is completed in a timely manner and will provide incentives for making all relevant information available to the initial validation auditor.

(4) Error Estimation

In the preamble to the proposed rule, we stated that we would estimate risk score error rates based on the findings from the data validation process. HHS plans to conduct further analysis to determine the most effective methodology for adjusting plan risk scores for calculating risk adjustment payment transfers. We are finalizing these provisions as proposed.

Comment: We received a few comments regarding the error estimation process generally. One comment proposed a three-tiered approach to extrapolating error rates to overall plan payment. The commenter suggested that sufficiently low error rates within a certain range of model accuracy would receive no extrapolation to plan payment, while high outlier error rates would subject an issuer to an additional round of audits. All other plans would receive an extrapolation of the plan's error rate to its payment rate. Another commenter asked that HHS perform an outlier analysis on risk scores within a State. Another commenter suggested that HHS audit all issuers to determine a mean or expected error rate, then perform appropriate statistical tests to compare issuer error rates to this expected error rate, and then determine the impact on plan payments. We also received a comment requesting that HHS use a dollar adjustment instead of a percent adjustment to the risk score.

Response: Following additional engagement with stakeholders, we expect to provide further detail on our approach to error estimation and payment transfer adjustments in future rulemaking and guidance.

Comment: We received a comment requesting clarification on whether error adjustments apply if an issuer under-reports its risk scores.

Response: Consistent with the approach in Medicare Advantage, we intend to apply error adjustments if an issuer under-reports its risk scores. We will provide further detail on these adjustments in future rulemaking and guidance.

(5) Appeals

Pursuant to § 153.350(d), HHS or a State operating risk adjustment must provide an administrative process to appeal data validation findings. We proposed in § 153.630(d) that issuers may appeal the findings of a second validation audit or the application of a risk score error rate to its risk adjustment payments and charges. We anticipate that appeals would be limited to instances in which the audit was not conducted in accordance with the second validation audit standards established by HHS.

Comment: We received a few comments expressing support that the appeals process be limited to the application of audit standards, and not the standards themselves.

Response: We are finalizing this provision as proposed.

(6) Payment Adjustments

We proposed that HHS would use a prospective approach when making payment adjustments based on findings from the data validation process. Specifically, we would use an issuer's data validation error estimates from the prior year to adjust the issuer's average risk score in the current transfer year. Additionally, because the credibility of the system is important for the success of the program, we proposed in paragraph § 153.630(e) that HHS may also adjust payments and charges for issuers that do not comply with the initial or second validation audit standards set forth in § 153.630(b) and (c).

Comment: We received a comment requesting further clarity on what impact a prospective approach to payment adjustments will have on plan pricing assumptions, and how actuarial soundness will be maintained if an issuer's risk profile changes substantially from year to year.

Response: We anticipate addressing these issues following stakeholder consultations prior to further rulemaking on data validation.

b. Proposed HHS-Operated Data Validation Process for Benefit Years 2014 and 2015

We proposed that issuers of risk adjustment covered plans adhere to the data validation process beginning with data for the 2014 benefit year. However, due to the complexity of the risk adjustment program and the data validation process, and the uncertainty in the market that will exist in 2014, we are concerned that adjusting payments and charges without first gathering information on the prevalence of error could lead to a costly and potentially ineffective audit program. Therefore, we proposed that issuers conduct an initial validation audit and that we conduct a second validation audit for benefit years 2014 and 2015, but that we would not adjust payments and charges based on validation findings during these first two years of the program. Although we proposed not to adjust payments and charges based on error estimates discovered, we noted that other remedies, such as prosecution under the False Claims Act, may be applicable to issuers not in compliance with the risk adjustment program requirements.

We requested comments on this approach, particularly with respect to improvements to the data validation process generally, whether there are alternatives to forgoing changes to payments and charges that we should adopt, and what methods we should adopt to ensure data integrity in the first two years of the program.

We also requested comments on the possibility of conducting the second validation audits at the auditor level as opposed to the issuer level in future years. As we anticipate that a small number of audit firms will perform the majority of the initial audits, this would allow us to examine the accuracy of the initial validation audit without having to draw large initial validation audit record samples from each issuer that participates in risk adjustment.

Comment: A number of commenters supported not altering payments and charges based on 2014 and 2015 data validation results. Numerous other commenters requested that HHS apply error rates to payment transfers from the outset of the program, while another commenter supported a one-year observation period before effecting data validation payment transfers.

Response: While we appreciate the concerns of the commenters, we continue to believe that in light of the complexity of the data validation process, two years of observation experience will help HHS refine its data validation process by enabling us to gather sufficient data on issuer and auditor error, and will provide issuers and auditors enough time to adjust to the audit program. Although we are not adjusting payments and charges based on error rates, we note that other remedies, such as prosecution under the False Claims Act, may be applicable to issuers not in compliance with the risk adjustment program requirements when HHS operates risk adjustment on behalf of a State.

Comment: We received multiple comments supporting the publishing of a report on error rates discovered during the first two years of the data validation program. One commenter asked for additional clarification of the overall goal of the report, whether the report will identify issuers and providers, and if the report will disclose error rates attributable to providers.

Response: The intent of the report is to provide issuers and auditors information on the level of error in the commercial market under the HHS-operated risk adjustment program. Additionally, we may study the extent to which errors at the auditor level

contribute to risk score error rate findings during the initial validation audits. We do not anticipate that the report will identify providers, but it may identify issuers. We do anticipate that the report will identify the error rates attributable to auditors.

Comment: We received one comment requesting further clarification on the timeframe in which issuers will be directed to provide sample data for a benefit year. The commenter also asked for further clarification on program integrity efforts if payment transfers are not altered by data validation audit results.

Response: We will issue further guidance and rulemaking on these matters.

c. Data Security and Transmission

In § 153.630(f), we proposed data security and transmission requirements for issuers related to the HHS data validation process. In § 153.630(f)(1), we proposed that issuers submit any risk adjustment data and source documentation specified by HHS for the initial and second validation audits to HHS in the manner and timeframe established by HHS. We proposed in § 153.630(f)(2) that, in connection with the initial validation audit, the second validation audit, and any appeals, an issuer must ensure that it and its initial validation auditor complies with the security standards described at § 164.308, § 164.310, and § 164.312. We did not receive any comments on these provisions, and are finalizing them as proposed.

6. State-Submitted Alternate Risk Adjustment Methodology

HHS received an alternate risk adjustment methodology from one State, the Commonwealth of Massachusetts. We are certifying this methodology as a Federally certified methodology for use in Massachusetts. A summary of that methodology, as prepared by the Commonwealth, is provided below. More detailed information about this methodology can be obtained from the Commonwealth of Massachusetts upon request. In addition, the Commonwealth of Massachusetts must publish a State notice of benefit and payment parameters, which will contain additional detail, within 30 days of the publication date of this final rule. Issuers and other interested parties should consult both of these sources. Additional questions may be addressed to Jean Yang, Executive Director of the Massachusetts Health Connector, at (617) 933–3059.

a. Policy Goals of the Massachusetts 2014 State Alternate Risk Adjustment Methodology

The Commonwealth of Massachusetts shares the same view as the Federal government with respect to the importance of the risk adjustment program and strives to achieve similar policy goals through the State-operated risk adjustment program powered by an alternate methodology. These specific goals include the following:

- The risk adjustment models should accurately explain variation in health care costs;
- The clinical classification used in the Commonwealth's alternate risk adjustment models should link risk factors to daily clinical practice and should be clinically meaningful to providers;
- The design of the clinical classification and the risk weights in the Commonwealth's alternate risk adjustment models should encourage favorable behavior from providers and health plans and discourage unfavorable behavior;
- The design of the Commonwealth's alternate risk adjustment methodology should reflect the Commonwealth's market characteristics, experience with risk adjustment, and be supportive of other health care reform initiatives in the Commonwealth;
- The Commonwealth's alternate risk adjustment methodology should use data that is complete, high quality and available in a timely fashion;
- The Commonwealth's alternate risk adjustment methodology should be easy for stakeholders to understand and implement;
- The methodology should account for risk selection across metal levels;
- The risk adjustment models and additional adjustment factors should provide stable risk scores over time and across plans;
- The operations of the Commonwealth's risk adjustment program should minimize administrative costs; and
- There should be reasonable alignment among different elements of the alternate methodology.

Starting from the same conceptual foundation as the proposed HHS risk adjustment methodology, the proposed Massachusetts alternate methodology is designed to address a number of Massachusetts-specific market characteristics and leverage existing data infrastructures to reduce the administrative burden for health plan issuers as well as for the Health Connector, which will be administering the program.

b. Conceptual Framework for Risk Adjustment Funds Transfer

Massachusetts's conceptual framework for calculating risk adjustment funds transfer is consistent with the proposed Federal risk adjustment methodology in that funds transfer is based on State average premium and should provide plans with payments to help cover excess actuarial risk due to risk selection; that is, risk exposure beyond the premiums issuers can charge reflecting allowable rating and their applicable cost factors.

Massachusetts proposes a single, merged risk adjustment pool for metal level plans in the small group and non-group market to be consistent with Massachusetts's merged market rules. Consistent with the proposed HHS methodology, Massachusetts proposes to keep catastrophic plans in their own risk adjustment pool, separate from the rest of the merged market. Massachusetts believes this will help ensure the accuracy of the risk adjustment calculations as well as the affordability of the catastrophic plans because funds transfer will take place amongst the catastrophic plans only, instead of between the catastrophic plans and the metal level plans if all plans were merged in one risk adjustment pool. It should be noted that under the current regulations in Massachusetts, pricing of the catastrophic plans is subject to the same merged market rules as the small group and non-group plans. Keeping catastrophic plans in a separate risk adjustment pool does not segment the market from a pricing perspective because catastrophic plans are still subject to single risk pool requirements, and risk adjustment is retrospective and applies to all non-grandfathered small group and non-group health plans, including catastrophic plans.

Due to the lack of empirical data, Massachusetts is unable to calibrate a separate risk adjustment model for catastrophic plans. It proposes to use the bronze risk adjustment model and an actuarial value adjustment factor of 0.57 in the funds transfer calculation for catastrophic plans in the initial years, and revisit this approach in future recalibrations when empirical data is available. Massachusetts proposes to treat student health plans and plans that are not subject to the Affordable Care Act Market Reform Rules in the same manner as the Federal methodology.

c. Data Used to Develop Risk Adjustment Methodology

Massachusetts used data from three different sources to develop the risk

adjustment models and additional adjustment factors in the Commonwealth's alternate risk adjustment methodology:

• *For the non-group and small group market, data from the Massachusetts All Payer Claims Database (APCD).* Calendar Year 2010, and 7/1/2011 to 6/30/2012 membership and claims data from the Massachusetts APCD. The Commonwealth obtained data extracts on non-group policy holders and small group members for group size up to 100 with ages 0 to 64 and eligible for medical and pharmacy coverage during the two observation periods. Collectively, Massachusetts thinks they are representative of a significant portion of the population that is subject to the risk adjustment program under the Affordable Care Act. About 700,000 unique individuals were included in the model development sample.

• *For enrollees under 300 percent FPL who are not eligible for Medicaid, data from the Commonwealth Care program.* Fiscal Years 2010 and 2011 Commonwealth Care program's membership and claims. More than 100,000 unique members with ages 0 to 64 from Commonwealth Care met the selection criteria and were included in the model development sample.

Commonwealth Care is a subsidized insurance program created as part of the 2006 Massachusetts health care reform law. It is administered by the Health Connector, and serves individuals with income up to 300 percent FPL who are not eligible for Medicaid and generally do not have access to employer-sponsored health insurance. As of December 2012, there are close to 198,000 members enrolled in the program. Massachusetts anticipates that, effective January 1, 2014, a portion of the current Commonwealth Care members will enroll in the expanded Medicaid program, and the remainder will access QHPs with tax credits through the Exchange.

Most health plan issuers that participate in the current Commonwealth Care program are local Medicaid managed care organizations (''MMCOs'') whose provider reimbursement level is typically lower than that of the commercial payers in Massachusetts for the same types of services. To normalize plan paid amount between the APCD data and the Commonwealth Care data, Massachusetts re-priced Commonwealth Care claims using unit prices derived from the APCD data. This was done using the Milliman Health Cost Guidelines® (''HCG'') Grouper. The HCG categorizes claims into more than 80 types of services, allowing us to directly compare unit prices by service type between the Commonwealth Care claims and the APCD claims. There were service types with very few members in either dataset. To obtain robust unit cost estimates, Massachusetts consolidated them with other service types that are similar in nature.

• *For additional sample size for calibration purposes, Calendar Year 2010 Truven Health Analytics Marketscan® Commercial Claims and Encounters database for New England States.* Massachusetts selected members with ages 0 to 64 who were eligible for medical and pharmacy coverage in PPO or Comprehensive plan type, and re-sampled them to match the age/gender distribution of the APCD data. The primary reason for using the Marketscan® data was to obtain a larger sample size which allowed for calibrating more robust risk adjustment models and to strengthen the data quality of the overall model development sample. Massachusetts notes that data from Marketscan® mostly represent large group experience. However, Massachusetts thinks that it is still a useful additional data source. More than 700,000 unique members were included from the Marketscan® New England States.

The consolidated claims data was then processed again through the Milliman Health Cost Guidelines® grouper system. The results from the grouper were compared to regional cost and utilization benchmarks and checked for reasonability. In this process, Massachusetts excluded some commercial payers in the APCD data, as well as certain claim lines in the Marketscan® data.

d. Risk Adjustment Models

(1) HCC Clinical Classification

Using claims from clinically valid sources (for example, laboratory, radiology, durable medical equipment, and transportation are not considered clinically valid), Massachusetts grouped diagnosis codes using the HCC classification system. Massachusetts referenced the HCC classification system in Pope et al. (2000), a Federally funded research study that laid the foundation for the CMS HCC risk adjustment payment system for Medicare Advantage.[13] The classification system in Pope et al. (2000) contains approximately 780 DxGroups which are then aggregated to more than 180 condition categories (''CC''s). Clinical hierarchies are then applied on the CCs to create HCCs. Because the HCC classification system was originally designed for the senior population, the designs of the condition categories may not be fully reflective of the characteristics of the commercial population. Through an iterative process using the model development sample, Massachusetts identified 20 DxGroups that were not very well predicted under the original HCC grouping and promoted them into their own HCCs.

When determining acceptable types of claims for grouping the HCCs, Massachusetts modified the approach outlined by Pope et al. (2000) to ensure that risk adjustment does not create unintended consequences with respect to how care is accessed in the current Massachusetts market environment. For example, Massachusetts accepted diagnosis codes from visits/encounters with nurse practitioners and physician assistants, recognizing that in patient-center medical home and ACO care settings, nurse practitioners and physician assistants play active and important roles in preventive care and chronic care management. Massachusetts also accepted diagnosis codes in claims from skilled nursing facilities and ambulatory surgical centers if the claims were coded by a clinician.

In the process of revising the original HCCs to better reflect the characteristics of the commercial population, Massachusetts followed the same 10 principles for designing a risk adjustment classification system as discussed in the proposed Federal risk adjustment methodology.

Compared with the 127 HHS-defined HCCs used by the Federal methodology, Massachusetts's methodology includes 162 Massachusetts-defined HCCs.[14] Below, Massachusetts discusses the key considerations with regard to the Commonwealth's decision to apply a more expansive set of condition categories.

Risk adjustment is a premium redistribution process that equalizes actuarial risks amongst a State's health plan issuers and helps stabilize premiums under modified community rating and individual mandate. Conceptually, risk adjustment models should be as accurate as possible while minimizing the potential for ''gaming''

[13] Available at: *http://www.cms.gov/Research-Statistics-Data-and-Systems/Research/HealthCareFinancingReview/downloads/04summerpg119.pdf* .

[14] Massachusetts's list of HCCs is available in Table 16 of this alternate methodology, while HHS's list of HCCs is published elsewhere in this rule. Note that the two lists are numbered differently, and different ICD–9 codes are associated with different HCCs and DxGs.

and coding creep. A more accurate model typically requires a higher number of predictive factors, and in the case of the HCCs, more HCCs. However, having more HCCs may also open up more opportunities for coding creep and gaming of the system. Therefore, a careful balance must be achieved. Although Massachusetts acknowledges that its higher number of HCCs may create some added potential for gaming or coding creep, it believes this risk is minimal because it will use only certain claims types and certain provider types, will impose clinical hierarchies, and will exclude certain vague diagnoses and codes subject to discretionary coding. Further, Massachusetts and its issuers have experience with the necessary best practices of risk adjustment and intend to implement an effective data validation process.

The Affordable Care Act risk adjustment program is designed to be a budget-neutral revenue redistribution among issuers. Health insurance issuers expect fair and adequate transfer of funds; that is, member risk profiles should be accurately stratified and correctly ranked.

The complete list of the condition categories included in the Massachusetts models is provided in Table 16. Although Massachusetts includes more HCCs than under the proposed Federal methodology, the Commonwealth notes that most commercial risk adjustment models use almost twice as many condition categories as it includes here.

(2) HCC Models

Similar to the HHS approach, Massachusetts calibrated models for bronze, silver, gold and platinum benefit tiers separately based on actuarial value. Due to the lack of empirical data, Massachusetts is unable to apply a separately-calibrated risk adjustment model for catastrophic plans until a sufficient amount of data becomes available in the future. At the present time, it plans to apply the risk adjustment model developed for bronze plans to catastrophic plans, and proposes to use the actuarial value adjustment factor of 0.57 (as provided by the Federal methodology) to account for benefit design related utilization differences between catastrophic plans and other metal level plans. For calculating funds transfer, Massachusetts plans to keep the catastrophic plans in their own risk adjustment pool in the initial years, which is consistent with the proposed Federal methodology. Please also refer to the conceptual framework for risk adjustment funds transfer above for more information on Massachusetts's treatment of catastrophic plans in risk adjustment.

The model dependent variable is total plan paid amount, or ''plan liability.'' Factors or explanatory variables included in the risk adjustment models are—1 constant term, 2 age/gender factors, 162 HCCs and 2 disease interaction terms. Unlike the proposed Federal methodology where there are 3 sets of risk weights by age cohort for each metal level, that is, 15 models in total, Massachusetts's models do not contain separate risk weights by age cohort. The Massachusetts methodology has 4 models, one for each metal level. The bronze model will be applicable to both the bronze plans and the catastrophic plans.

In risk adjustment modeling work, partial-year eligibility is typically addressed by annualizing the dependent variable and weighting the least squares regressions by the fraction of eligibility. Massachusetts began modeling using this approach and found that the predictive accuracy for members with short eligibility, especially newborns, was low. Upon further analyses, Massachusetts believes that this was related to annualizing the dependent variable and using eligibility duration as weight in regressions. As a result Massachusetts explored nonlinear modeling techniques and developed a set of factors to adjust for partial-year eligibility. In its risk adjustment models, the minimum eligibility duration requirement is 1 month.

Massachusetts's thinking on this issue reflects the Commonwealth's experience with programs that have high turnover rates, such as the Commonwealth Care program. Massachusetts believes that prediction biases associated with partial-year eligibility could aggravate selection issues if not addressed adequately.

Massachusetts took an iterative approach to developing the risk adjustment models. In each iteration, factors with negative and/or statistically insignificant coefficients and factors without adequate sample size were either excluded or combined with other factors. The unique feature of the HCC risk adjustment models is clinical hierarchy—that is, the coefficient of a less severe condition category should not exceed the coefficient of a more severe condition in the same clinical hierarchy. This ensures clinical validity and preserves healthcare resource for treating more severe medical conditions. Massachusetts ensured that all coefficients follow the clinical hierarchies. Where they did not, it forced monotonicity in the regression coefficients using restricted regressions.

Because the models are by metal level, one HCC may receive 4 different risk weights in the 4 models. Under the assumption that an HCC treated in a lower metal level plan should not lead to higher plan liability than if it were treated in a higher metal level plan, Massachusetts also forced monotonicity by HCC across metal levels.

In the final models, all factors have nonnegative and statistically significant coefficients, and have met the monotonicity requirements of the HCCs and the monotonicity requirements Massachusetts imposed by metal level. Massachusetts also checked that the member-level total predictions are monotonic across benefit tiers by age/gender groups. Table 17 provides the full set of coefficients.

Below is an example of how to calculate an individual risk score from these HCC models.

Example: Member 001, male, 25 years old, is enrolled in a Gold plan for 6 months, and has three HCCs-HCC005, HCC032, and HCC072.

Member Risk Score = Constant Term + Demographic Factor + Sum (Medical Risk Factors)/Duration Adjustment Factor

= 0.108698 + 0 + (4.203378 + 1.093277 + 4.025404)/0.742262

= 12.667685

The Constant Terms, Demographics Factor and Medical Risk Factors are provided in Table 17. The Duration Adjustment Factors are provided in Table 18.

(3) Predictive Accuracy

The final model R-Squared is provided below in Table 12.

TABLE 12—FINAL MODEL R-SQUARED

	Counts of Unique Members	Model R-Squared for Predicting Paid $PMPY (percent)
Platinum	344,472	48.54
Gold	171,207	52.91
Silver	415,245	46.66
Bronze	193,725	47.58

These are comparable to the R-Squared levels observed in many commercial risk adjustment models. Massachusetts also validated the models using a more recent data extract from the Commonwealth's APCD and obtained similar R-Squared values.

e. Adjusting for Induced Demand

(1) Adjusting for Metallic Tier and Cost-Sharing Reduction

In the proposed rule, a set of induced utilization adjustment factors were provided to account for the expected utilization level differences associated with different benefit levels of plans, as well as those that result from CSRs applied to Silver Variation plans.

Massachusetts proposes to use the HHS proposed induced demand factors to adjust for induced utilization tied to metallic tiers. In terms of adjusting for induced utilization associated with CSR through Silver Variation plans, however, its methodology must appropriately account for Massachusetts's unique circumstance as related to the anticipated cost-sharing wrap above and beyond the Federal CSR.

As a result, from the perspective of induced utilization adjustment, the factors supplied in the HHS methodology (specifically calibrated for target AVs of 73 percent, 87 percent and 94 percent) may not be adequate for Massachusetts. To overcome this limitation, Massachusetts constructed a continuous induced demand curve by fitting a polynomial trend line to the HHS proposed induced utilization factors by metal level, which Massachusetts extended to 100 percent AV and validated as described below.

Using the APCD and Commonwealth Care data sets Massachusetts calculated an average member-month-weighted risk score and an average PMPM claim amount for each metallic tier. It then backed out the average risk score to calculate a risk-neutral PMPM claim amount for each metallic tier. Massachusetts performed this analysis separately for non-group and small group after adjusting the non-group results for the impact of non-group selection. The difference in the risk neutral rate by tier is the impact of benefit design induced utilization. With data from both the APCD and Commonwealth Care, Massachusetts was able to populate the curve with a continuous range of AV values including those that are close to 100 percent.

The sample size for bronze and silver metal levels was too small to be credible but for the gold and platinum metal levels the results were consistent with the HHS factors. Massachusetts determined that this validated its decision to use the HHS-proposed induced demand factors to adjust for induced utilization tied to metallic tiers.

For plans subject to anticipated cost-sharing wrap subsidies Massachusetts intends to use the same induced demand curve to determine the increased utilization as a result of subsidized cost sharing. In Table 13 below it has listed induced demand factors by actuarial value in 2 percent increments.

TABLE 13—INDUCED DEMAND FACTORS

Plan AV	Induced demand factor
0. 70	1. 000
0. 72	1. 008
0. 74	1. 017
0. 76	1. 027
0. 78	1. 037
0. 80	1. 049
0. 82	1. 061
0. 84	1. 073
0. 86	1. 087
0. 88	1. 101
0. 90	1. 117
0. 92	1. 132
0. 94	1. 149
0. 96	1. 167
0. 98	1. 185

(2) Adjusting for Non-Group Selection

The proposed Market Reform Rule and the proposed HHS notice of benefit and payment parameters for 2014 contemplate separate risk pools for individual and small group policies and modified community rating to be applied separately within each risk pool. The Commonwealth has had a merged small and non-group market since its landmark reform in 2006, where small groups and non-group plans are subject to the same index rate and pricing methodology.

In order to determine if there is an underlying selection dynamic related only to members' group versus non-group status, Massachusetts applied concurrent risk adjustment models developed for the Commonwealth to merged market membership and claims data from the Commonwealth's APCD. The models account for cost variations due to demographics, medical comorbidities and plan benefit design. The risk-adjusted paid amount was calculated at the member level.

Members were grouped by non-group versus small group. Groups of 1 were treated as non-group policies in its analysis. The average actual annual paid amount and the average risk-predicted annual paid amount were compared in total and by metal level. The ratio of actual paid to the risk-predicted paid for those enrolled in non-group products was compared to the same ratio for those enrolled in small group products. Any meaningful difference between the ratios for these two groups would indicate that there is a cost difference between the types of members—*that is,* non-group versus small group—that is not explained by the characteristics accounted for in the risk adjustment models.

Massachusetts found a higher average ratio for the non-group market segment. However, it also found that this selection was limited to platinum plans. As such, Massachusetts's methodology includes an induced demand factor that will only be applied to those enrolled in platinum plans. Based on two years' worth of APCD data, Massachusetts found that on average the ratio for platinum plans was 5.7 percent higher for non-group over small group, while for gold plans it was broadly consistent between non-group and small group. The Commonwealth plans to re-calibrate this factor periodically based on up-to-date experience of the market. This factor will be applied to individuals who enrolled in platinum plans and do not receive premium subsidies or CSRs. The individual risk score will be multiplied by this factor.

This adjustment mechanism as part of the risk adjustment methodology is uniquely relevant to the merged market in Massachusetts. In other States where there are separate risk pools for individual plans and small group plans the selection differential is embedded in the underlying claims level of each risk pool.

f. Calculation of Funds Transfer

The funds transfer calculation Massachusetts proposes is structurally the same as the proposed Federal methodology, although some of the adjustment factors included in the Commonwealth's calculation are defined differently and were developed from the Commonwealth's own data.

Massachusetts will use the following formula to calculate risk adjustment funds transfers.

$$T_i = \left[\frac{PLRS_i \cdot IDF_i \cdot GCF_i}{\sum_i (s_i \cdot PLRS_i \cdot IDF_i \cdot GCF_i)} - \frac{AV_i \cdot ARF_i \cdot IDF_i \cdot GCF_i}{\sum_i (s_i \cdot AV_i \cdot ARF_i \cdot IDF_i \cdot GCF_i)}\right]\overline{P_s}$$

(1), where

T_i = plan i's risk adjustment transfer amount
$PLRS_i$ = plan i's plan liability risk score
P_S = average premium for Massachusetts
AV_i = plan i's metal level AV
ARF_i = allowable rating factor for plan i
IDF_i = plan i's induced demand factors for benefit design and non-group selection
GCF_i = plan i's geographic cost factor
s_i= plan i's share of the Commonwealth's enrollment

The first fraction in formula (1) is premium with risk selection, and the second fraction is premium without risk selection. Each component will average to 1.0 across all plans in the Commonwealth's merged market. Massachusetts will keep catastrophic plans in their own risk adjustment pool. In this case, formula (1) will apply to the catastrophic risk adjustment pool and the metal level plans risk adjustment pool separately.

The calculation of $PLRS_i$, plan i's plan liability risk score, is the enrolled member month weighted risk scores of plan i using the risk adjustment models and adjusted by billable member months. It is calculated as shown by HHS. See the section above on HCC models and Tables 17 and 18 below for the risk weights and how to calculate member level risk scores. Massachusetts proposes to use this approach for calculating plan liability risk scores under the assumption that the proposed Federal rule for family rating will be replicated by the Commonwealth.

The calculation of the State average premium is as shown by HHS.

Massachusetts will use the Federal adjustment factors for plan AV in the Commonwealth's funds transfer calculations. The AV adjustment factors (AV_i for plan i) are listed in Table 14 below.

TABLE 14—AV ADJUSTMENT FACTORS

Metal level	AV adjustment factor
Catastrophic	0.57
Bronze	0.60
Silver	0.70
Gold	0.80
Platinum	0.90

Massachusetts's methodology includes two separate induced demand factors (IDF_i for plan i), one relates to benefit design and CSR and one for group selection. These two factors are multiplicative, except for individuals who will receive Federal subsidies and additional State subsidies, because their cost-sharing level is prescribed rather than selected.

Allowable rating factors (ARF_i for plan i) will include the State-defined uniform age rating curve. Pending final State decision on all rating factors applicable to 2014, Massachusetts will provide additional specifications as needed on additional adjustment steps to ensure the accuracy of risk adjustment.

Massachusetts proposes to calculate geographic cost factors consistent with the HHS methodology, except that it plans to use gold plans as the benchmark for the calculations because gold plans are expected to attract the most enrollment in the Massachusetts merged market after 2014, whereas silver plans will likely have relatively low enrollment based on the product market in Massachusetts today. Having a data sample with sufficient enrollment is necessary in order to credibly measure regional cost differences. Massachusetts has not yet made a final decision on the number of rating areas, permissible range of the rates by area, or the schedule for implementing the changes. However, regardless of the specific decisions that determine the actual factors, the calculations will follow the formula shown by HHS.

g. Data Collection Approach

Massachusetts proposes an approach to risk adjustment data collection that leverages the Commonwealth's existing APCD as a resource for data submission to support risk adjustment data collection. This approach facilitates Massachusetts's policy goals of administrative simplicity and minimizing the number and types of data submissions by health plan issuers. Consistent with Federal requirements, it also facilitates the use of data that is complete, high in quality, and available in a timely fashion. Moreover, as elaborated below, use of the APCD ensures that the Commonwealth does not as part of risk adjustment data collection store any personally identifiable information for use as a unique identifier (except as may be required for data validation).

The APCD is maintained by the Massachusetts Center for Health Information and Analysis (CHIA) and requires data submission from the following entities: Public payers, commercial insurance issuers, health maintenance organizations, third-party administrators, and self-insured plans. Data submissions must be filed monthly.

The APCD collects payer data for all members living in Massachusetts. Health plan issuers and other payers submit five files each month: Member eligibility, medical claims, pharmacy claims, dental claims and provider details. Product description files from all of the payers are submitted to the APCD on a quarterly basis. Detailed data submission requirements are in place and available for review on CHIA's Web site, *http://www.mass.gov/chia/researcher/health-care-delivery/hcf-data-resources/apcd/*. Members of a Massachusetts employer group who live out of State are currently excluded unless the payer also holds a contract with the Commonwealth's employee health administrator to provide data for State-covered non-resident individuals. The Commonwealth is working with CHIA and the affected data submitters actively to have this resolved before 2014 to ensure the accuracy of risk adjustment. It is also working with CHIA and issuers in the Commonwealth to evaluate additional data elements needed to support risk adjustment calculations.

The APCD already collects most of the data elements to support risk adjustment (see discussion of the data extract elements below), and nearly all other elements have to this date been scheduled to be added as part of APCD collection. As part of data intake, automated data quality checks are performed by CHIA. Once data are quality checked the subset required for risk adjustment are processed for purposes of creating an extract for risk adjustment calculations. Creation of the extract signifies the beginning of the risk adjustment data collection process. The extract provides only those data elements that are necessary for risk adjustment and contains no personally identifiable information for use as a unique identifier for an enrollee's data.

Using the data extract from the APCD, the Health Connector will be responsible for performing all risk adjustment calculations as well as facilitating payment and charge transactions. The data extracts will be maintained in a secure environment that meets applicable Federal and State security standards.

Below Massachusetts describes the data elements currently submitted to the APCD that will be used to create the risk adjustment extract. The Commonwealth also reviews the Health Connector's authority to use the APCD to support risk adjustment data collection, and provide additional details on data quality monitoring and control, data privacy and security standards, and the data management plan for risk adjustment operations.

h. Available Data in APCD for Risk Adjustment

As noted, the APCD already collects most of the data elements needed for risk adjustment. Member files include member and subscriber identifiers,

relationships, demographics, information about the payer, product and coverage, and duration of enrollment. Claims files include all paid claims (including encounter data on capitated services) for covered services, including but not limited to institutional and professional services, therapies, durable medical equipment (DME), transportation, laboratory services, imaging, and skilled nursing. Pharmacy files include all prescribed and dispensed medications. Dental claims files include all treatments and services. Provider files support the identification of providers by specialty and location. Product files provide limited information about the different insurance products that correspond to the Member file.

On the Commonwealth of Massachusetts Web site, *http://www.mass.gov/chia/researcher/health-care-delivery/hcf-data-resources/apcd/submitting-data-to-the-apcd.html#regulations,* it has made available a table of a subset of the data elements that are currently collected from payers. It will use the identified elements as inputs for calculating risk adjustment funds transfers and the assignment of a member to the correct plan.

There are data elements required to calculate risk adjustment funds transfer that the APCD currently does not collect, such as monthly premium, employer zip code, household income level, Indian status, and AV or inputs used to calculate AV using the Federal AV calculator. Massachusetts is currently working with CHIA, other State agencies, and the issuers in Massachusetts to add these data elements as part of APCD data collection and is working with plans to have them submitted by June 1, 2013. Some data elements—Indian status and household income—will be submitted to the APCD via the Exchange.

In addition, certain plans may not have sufficient claims experience reported in the APCD. This gap may occur because plans may be exempt from data submission or are new to the Massachusetts market. Current APCD regulations exempt small plans with less than 1,000 covered lives in Massachusetts-based plans from submitting regular data files. This exemption recognizes the administrative cost of programming and providing regular data extracts. Health plan issuers that are new to the Massachusetts market will need to take time to build up the capacity to submit data to the APCD on a regular basis. As such, Massachusetts plans to establish a method for small and new-to-market plans to submit minimally necessary data for risk adjustment through an alternate mechanism than the APCD. The specifications for this alternate submission, the secure data transfer methodology, and the communication of results to the issuers will be developed as part of risk adjustment operations and will not use any personally identifiable information as a unique identifier.

(1) Legal Authority for the Health Connector To Access APCD Data for Risk Adjustment

Massachusetts General Laws (M. G. L.) Chapter 118G§ 6 authorized the Division of Health Care Finance and Policy (DHCFP) to collect uniform information from public and private health care payers and to operate the Commonwealth's APCD. The Commonwealth's authority to collect, analyze and report health care cost and utilization was further expanded with the passage and subsequent enactment of Chapter 224 of the Acts of 2012. Section 19 of this law established CHIA with broad responsibility for health care data collection, analysis and reporting, including the APCD. CHIA assumes all of the data collection, management and analysis tasks previously performed by DHCFP. In addition, the statute enables CHIA to provide government agencies and other parties access to data for the purpose of lowering total medical expenses, coordinating care, benchmarking, quality analysis and other research, for administrative or planning purposes. CHIA may also provide information to and work with other State agencies to ''collect and disseminate data concerning the cost, price and functioning of the health care system in the Commonwealth and the health status of individuals.''

Massachusetts is currently developing an agreement with CHIA to obtain data management and analytic support to administer the risk adjustment program, consistent with M. G. L. ch. 12C which gives CHIA the authority to enter into interagency service agreements with other Massachusetts agencies ''for transfer and use of data.''

(2) Data Security and Privacy Protection

As noted, under existing law and regulation, the Commonwealth already collects a range of data through its APCD and protects this information as described below.

Specifically in relation to data collection under risk adjustment and Federal requirements, the risk adjustment extract created through the APCD will not use or store any personally identifiable information for use as a unique identifier for an enrollee's data. Only those data fields that are reasonably necessary as part of the risk adjustment methodology will be included in the extract.

For background, the APCD data is hosted on servers located at the offices of the Commonwealth of Massachusetts Executive Office of Health and Human Services Center for Health Information and Analysis at Two Boylston Street, Boston, Massachusetts 02116. CMS has approved CHIA's application to receive and hold Medicare data under the newly created APCD category. In fact, CHIA was the first APCD to apply and be approved. CHIA is fully compliant with the CMS Data Use Agreement (See CMS DUA #20937).

CHIA is an experienced custodian of protected health information. Since 1982, CHIA (as DHCFP) has served as the repository for the State's Hospital Discharge Data, Emergency Room Data and Outpatient Observation Data. CHIA has extensive claims processing experience as the operator of the State's Health Safety Net program. CHIA has passed two independent third party security audits—a HIPAA security audit and a SAS–70 Type 2 audit. In addition, PCI security audits are done quarterly on CHIA's web portal.

As indicated above, the data extract produced by the APCD on behalf of the Health Connector for calculating risk adjustment funds transfer will contain no personally identifiable information for use as a unique identifier for an enrollee's data. All personal identifiers will be replaced with a scrambled Unique Member Identification number that is created independent of any HIPAA Protected Health Information or other personally identifiable information. This number will be a string of letters, numbers and symbols that cannot be ''de-encrypted'' to yield decipherable data.

The risk adjustment data extract will be securely transmitted into a secure data environment that will be established by the Health Connector. Calculations of plan actuarial risks and funds transfer will take place in this secure environment, with no personally identifiable information being used as a unique identifier. Massachusetts states that it has a fully HIPAA-compliant facility and data infrastructure in active use for operating the risk adjustment program for the Commonwealth Care program, which can be used for administering the Affordable Care Act risk adjustment program. Massachusetts also states that it is in active discussions with CHIA on the possibility of establishing a dedicated secure data

environment for risk adjustment at CHIA's Data Center.

Finally, leveraging funding applied through the Health Connector's Level 2 Exchange Establishment Grant (currently under CCIIO review), CHIA plans to upgrade its disaster recovery program to meet the performance requirement necessary for supporting risk adjustment.

(3) Data Quality Control

The APCD data intake and warehousing operation incorporates data quality evaluation and monitoring processes to ensure the integrity and accuracy of downstream files.

CHIA has published a set of data completeness checks containing nearly 800 unique automated tests that are conducted at intake within the secure processing environment. These checks are used to assess the file's compliance with minimum standards. A full list of these checks is available on CHIA's Web site: *http://www.mass.gov/chia/researcher/health-care-delivery/hcf-data-resources/apcd/submitting-data-to-the-apcd.html*.

When this evaluation process is complete, a report is generated for the payer's review. The report shows the test results and whether the file ''passes'' and can move forward into the next phase of processing. If a file does not pass at any point in this process, the APCD does not conduct any further processing and notifies the payer that errors must be corrected and the files resubmitted. Full resubmission of a file is required in order to maintain file integrity.

CHIA will submit further supplemental information detailing its plans to collect data from any non-compliant issuers, including additional information on alternate data submission procedures.

(4) Data Collection Timeline

Massachusetts plans to provide quarterly funds transfer calculation summaries to each issuer that is subject to risk adjustment and will be working with the issuers to determine the appropriate content and level of detail for the quarterly report summaries. The proposed timeline for processing and analyzing APCD data for Calendar Year 2014 for the purpose of risk adjustment is illustrated below. Massachusetts is in discussions with CHIA and the issuers regarding the timeline and also plan to conduct test runs to ensure the feasibility of the timeline and quality of the data collection process.

TABLE 15—PROPOSED TIMELINE FOR RISK ADJUSTMENT DATA COLLECTION

Time period	Activity
Each quarter:	
Months 1, 2, 3	Issuers submit data. Data submitters submit on a monthly basis.
Month 3 + 1 month (Month 4)	Claims run-out period.
Month 3 + 2 months (Month 5)	Quality checks at designated points in current APCD process.
	Member identity resolution and de-identification via removal of personal identifiers.
	CHIA creates extract with minimally necessary data elements and sends to Connector or Connector's designee to calculate risk adjustment.
	Quality review by the Connector or its designee. The purpose here is to determine whether data meets quality standards for risk adjustment purposes. Identified issues and recommended action steps will be sent to CHIA and the issuers regarding resubmission.
Month 3 + 3 months (Month 6)	Conducts all calculations relating to risk adjustment.
	Sends a preliminary report to data submitters for review and discusses results and observations with issuers.
January through March of the following year.	Claims run-out period. The proposed data submission deadline is March 31 of the following year, *i.e.*, 3 months claims runout.
April of the following year	Filing deadline for claims paid through March 31 of the following year.
May of the following year	Quality assurance process and creation of the data extract.
	Grouping and review with data submitters.
June of the following year	Funds transfer settlements calculated and reports generated by June 30 of the following year.

i. Schedule of Calibration and Recalibration

The risk adjustment models and the additional adjustment factors proposed will need to be calibrated and recalibrated periodically to be reflective of current market conditions, the evolving insured population, medical technology and other secular trends in Massachusetts. Massachusetts will evaluate the goodness of fit of the risk adjustment models and the appropriateness of the additional adjustment factors on an ongoing basis and recalibrate every three years if the evaluation justifies. On October 1, 2014, the entire country is expected to transition to ICD–10–CM coding. Massachusetts expects to update the current clinical classification system such that it can group ICD–10–CM diagnosis codes into the existing HCCs in 2014. However, it does not plan to recalibrate the risk factors in the models due to the lack of claims experience under the new coding system.

j. Data Validation

While not part of the risk adjustment methodology, Massachusetts is considering a range of potential data validation approaches. The Premium Stabilization Rule, § 153.350 requires States operating a risk adjustment program to conduct data validation and provide an appeals process. The key goal from Massachusetts's perspective is to strike a balance between a data validation process that optimizes the identification of errors while implementing a workable system that is not administratively burdensome and that recognizes the zero sum nature of transfers between health plan issuers. Under the Premium Stabilization Rule, Massachusetts will be developing its approach to data validation and an appeals process, and will provide an overview of current considerations in its State notice of benefit and payment parameters.

TABLE 16—LIST OF HCCS IN MASSACHUSETTS RISK ADJUSTMENT METHODOLOGY FOR 2014

HCC	Description
HCC001	HIV/AIDS.
HCC201	Bacteremia.
HCC002	Septicemia/Shock.
HCC003	Central Nervous System Infection.
HCC004	Tuberculosis.
HCC005	Opportunistic Infections.
HCC202	Secondary Cancer Except Lymph Node.
HCC203	Secondary Cancer of Lymph Node.
HCC204	Cancer of the Brain/Nervous System/Pituitary, Pineal Glands.
HCC205	Acute Leukemia.
HCC008	Lung, Upper Digestive Tract, and Other Severe Cancers.
HCC009	Lymphatic, Head and Neck, Brain, and Other Major Cancers.
HCC010	Breast, Prostate, Colorectal and Other Cancers and Tumors.
HCC011	Other Respiratory and Heart Neoplasms.
HCC012	Other Digestive and Urinary Neoplasms.
HCC013	Other Neoplasms.
HCC015	Diabetes with Renal Manifestation.
HCC016	Diabetes with Neurologic or Peripheral Circulatory Manifestation.
HCC017	Diabetes with Acute Complications.
HCC018	Diabetes with Ophthalmologic Manifestation.
HCC019	Diabetes with No or Unspecified Complications.
HCC020	Type I Diabetes Mellitus.
HCC021	Protein-Calorie Malnutrition.
HCC022	Other Significant Endocrine and Metabolic Disorders.
HCC023	Disorders of Fluid/Electrolyte/Acid-Base Balance.
HCC025	End-Stage Liver Disease.
HCC026	Cirrhosis of Liver.
HCC027	Chronic Hepatitis.
HCC028	Acute Liver Failure/Disease.
HCC029	Other Hepatitis and Liver Disease.
HCC030	Gallbladder and Biliary Tract Disorders.
HCC031	Intestinal Obstruction/Perforation.
HCC032	Pancreatic Disease.
HCC033	Inflammatory Bowel Disease.
HCC034	Peptic Ulcer, Hemorrhage, Other Specified Gastrointestinal Disorders.
HCC035	Appendicitis.
HCC036	Other Gastrointestinal Disorders.
HCC037	Bone/Joint/Muscle Infections/Necrosis.
HCC038	Rheumatoid Arthritis and Inflammatory Connective Tissue Disease.
HCC206	Spinal Stenosis.
HCC039	Disorders of the Vertebrae and Spinal Discs (See HCC206).
HCC040	Osteoarthritis of Hip or Knee.
HCC041	Osteoporosis and Other Bone/Cartilage Disorders.
HCC042	Congenital/Developmental Skeletal and Connective Tissue Disorders.
HCC207	Hemophilia.
HCC044	Severe Hematological Disorders (See HCC207).
HCC045	Disorders of Immunity.
HCC208	Hereditary Hemolytic Anemias and Coagulation Defects.
HCC209	Toxic/Unspecified Encephalopathy.
HCC048	Delirium and Encephalopathy (See HCC209).
HCC049	Dementia.
HCC050	Senility, Nonpsychotic Organic Brain Syndromes/Conditions.
HCC051	Drug/Alcohol Psychosis.
HCC052	Drug/Alcohol Dependence.
HCC054	Schizophrenia.
HCC055	Major Depressive, Bipolar, and Paranoid Disorders.
HCC056	Reactive and Unspecified Psychosis.
HCC057	Personality Disorders.
HCC058	Depression.
HCC059	Anxiety Disorders.
HCC061	Profound Mental Retardation/Developmental Disability.
HCC062	Severe Mental Retardation/Developmental Disability.
HCC063	Moderate Mental Retardation/Developmental Disability.
HCC064	Mild/Unspecified Mental Retardation/Developmental Disability.
HCC065	Other Developmental Disability.
HCC066	Attention Deficit Disorder.
HCC067	Quadriplegia, Other Extensive Paralysis.
HCC068	Paraplegia.
HCC069	Spinal Cord Disorders/Injuries.
HCC070	Muscular Dystrophy.
HCC071	Polyneuropathy.
HCC072	Multiple Sclerosis.

TABLE 16—LIST OF HCCS IN MASSACHUSETTS RISK ADJUSTMENT METHODOLOGY FOR 2014—Continued

HCC	Description
HCC073	Parkinson's and Huntington's Diseases.
HCC074	Seizure Disorders and Convulsions.
HCC075	Coma, Brain Compression/Anoxic Damage.
HCC076	Mononeuropathy, Other Neurological Conditions/Injuries.
HCC077	Respirator Dependence/Tracheostomy Status.
HCC078	Respiratory Arrest.
HCC210	Post Trauma/Surgery Pulmonary Insufficiency, Incl Adult Respir Distress Syndr.
HCC079	Cardio-Respiratory Failure and Shock (See HCC210).
HCC080	Congestive Heart Failure.
HCC081	Acute Myocardial Infarction.
HCC082	Unstable Angina and Other Acute Ischemic Heart Disease.
HCC083	Angina Pectoris/Old Myocardial Infarction.
HCC084	Coronary Atherosclerosis/Other Chronic Ischemic Heart Disease.
HCC085	Heart Infection/Inflammation, Except Rheumatic.
HCC086	Valvular and Rheumatic Heart Disease.
HCC087	Major Congenital Cardiac/Circulatory Defect.
HCC088	Other Congenital Heart/Circulatory Disease.
HCC092	Specified Heart Arrhythmias.
HCC093	Other Heart Rhythm and Conduction Disorders.
HCC095	Cerebral Hemorrhage.
HCC096	Ischemic or Unspecified Stroke.
HCC097	Precerebral Arterial Occlusion and Transient Cerebral Ischemia.
HCC098	Cerebral Atherosclerosis and Aneurysm.
HCC100	Hemiplegia/Hemiparesis.
HCC102	Speech, Language, Cognitive, Perceptual Deficits.
HCC104	Vascular Disease with Complications.
HCC105	Vascular Disease.
HCC106	Other Circulatory Disease.
HCC107	Cystic Fibrosis.
HCC108	Chronic Obstructive Pulmonary Disease.
HCC109	Fibrosis of Lung and Other Chronic Lung Disorders.
HCC110	Asthma.
HCC111	Aspiration and Specified Bacterial Pneumonias.
HCC112	Pneumococcal Pneumonia, Empyema, Lung Abscess.
HCC113	Viral and Unspecified Pneumonia, Pleurisy.
HCC114	Pleural Effusion/Pneumothorax.
HCC115	Other Lung Disorders.
HCC116	Legally Blind.
HCC117	Major Eye Infections/Inflammations.
HCC118	Retinal Detachment.
HCC119	Proliferative Diabetic Retinopathy and Vitreous Hemorrhage.
HCC120	Diabetic and Other Vascular Retinopathies.
HCC122	Glaucoma.
HCC125	Significant Ear, Nose, and Throat Disorders.
HCC126	Hearing Loss.
HCC128	Kidney Transplant Status.
HCC130	Dialysis Status.
HCC211	Acute Renal Failure.
HCC131	Non-Acute Renal Failure (See HCC211).
HCC132	Nephritis.
HCC133	Urinary Obstruction and Retention.
HCC134	Incontinence.
HCC135	Urinary Tract Infection.
HCC136	Other Urinary Tract Disorders.
HCC137	Female Infertility.
HCC138	Pelvic Inflammatory Disease and Other Specified Female Genital Disorders.
HCC141	Ectopic Pregnancy.
HCC142	Miscarriage/Abortion.
HCC143	Completed Pregnancy With Major Complications.
HCC144	Completed Pregnancy With Complications.
HCC145	Completed Pregnancy Without Complications (Normal Delivery).
HCC146	Uncompleted Pregnancy With Complications.
HCC147	Uncompleted Pregnancy With No or Minor Complications.
HCC148	Decubitus Ulcer of Skin.
HCC150	Extensive Third-Degree Burns.
HCC151	Other Third-Degree and Extensive Burns.
HCC152	Cellulitis, Local Skin Infection.
HCC154	Severe Head Injury.
HCC155	Major Head Injury.
HCC156	Concussion or Unspecified Head Injury.
HCC157	Vertebral Fractures.
HCC158	Hip Fracture/Dislocation.

TABLE 16—LIST OF HCCS IN MASSACHUSETTS RISK ADJUSTMENT METHODOLOGY FOR 2014—Continued

HCC	Description
HCC159	Major Fracture, Except of Skull, Vertebrae, or Hip.
HCC160	Internal Injuries.
HCC161	Traumatic Amputation.
HCC164	Major Complications of Medical Care and Trauma.
HCC168	Extremely Low Birthweight Neonates.
HCC169	Very Low Birthweight Neonates.
HCC212	Low Birthweight (1500–2499 grams) or Unspecified.
HCC170	Serious Perinatal Problem Affecting Newborn (See HCC212).
HCC171	Other Perinatal Problems Affecting Newborn.
HCC172	Normal, Single Birth.
HCC213	Bone Marrow Transplant Status/Complications.
HCC174	Major Organ Transplant Status (See HCC213).
HCC175	Other Organ Transplant/Replacement.
HCC176	Artificial Openings for Feeding or Elimination.
HCC177	Amputation Status, Lower Limb/Amputation Complications.
HCC180	Radiation Therapy.
HCC181	Chemotherapy.
HCC182	Rehabilitation

TABLE 17—PROPOSED RISK ADJUSTMENT MODELS FOR MASSACHUSETTS RISK ADJUSTMENT METHODOLOGY FOR 2014

Factor	Platinum	Gold	Silver	Bronze/catastrophic
Constant Term	0. 108698	0. 108698	0. 054613	0. 054613
Female, 0–1	0. 120243	0. 120243	0. 120243	0. 076300
Male, 0–1	0. 430573	0. 252549	0. 252549	0. 130423
HCC001	4. 151453	4. 151453	3. 974417	3. 974417
HCC201	5. 439483	5. 439483	5. 439483	5. 439483
HCC002	4. 911655	4. 911655	4. 911655	4. 911655
HCC003	2. 070673	2. 070673	2. 070673	2. 070673
HCC004	1. 458104	0. 580915	0. 580915	0. 580915
HCC005	4. 203378	4. 203378	4. 203378	4. 203378
HCC202	6. 482786	6. 482786	6. 482786	6. 482786
HCC203	6. 482786	6. 482786	5. 475333	5. 475333
HCC204	6. 047288	4. 581452	4. 147687	2. 272855
HCC205	10. 703344	10. 703344	10. 703344	10. 703344
HCC008	2. 272855	2. 272855	2. 272855	2. 272855
HCC009	1. 075169	1. 075169	1. 075169	1. 075169
HCC010	1. 075169	1. 075169	1. 075169	1. 075169
HCC011	1. 075169	1. 075169	1. 075169	1. 075169
HCC012	0. 375903	0. 373614	0. 373614	0. 373614
HCC013	0. 375903	0. 373614	0. 373614	0. 373614
HCC015	0. 921977	0. 921977	0. 921977	0. 921977
HCC016	0. 395184	0. 395184	0. 395184	0. 395184
HCC017	0. 395184	0. 395184	0. 395184	0. 320869
HCC018	0. 320869	0. 320869	0. 320869	0. 320869
HCC019	0. 320869	0. 320869	0. 320869	0. 320869
HCC020	0. 844671	0. 844671	0. 769198	0. 769198
HCC021	8. 780537	8. 780537	8. 780537	8. 780537
HCC022	0. 976845	0. 976845	0. 976845	0. 976845
HCC023	1. 346099	1. 346099	1. 346099	1. 346099
HCC025	1. 601166	1. 601166	1. 346120	1. 346120
HCC026	0. 986228	0. 986228	0. 408007	0. 408007
HCC027	0. 460726	0. 460726	0. 408007	0. 408007
HCC028	1. 601166	1. 601166	1. 346120	1. 346120
HCC029	0. 408007	0. 408007	0. 408007	0. 408007
HCC030	1. 977590	1. 977590	1. 882379	1. 882379
HCC031	3. 749986	3. 749986	3. 749986	3. 749986
HCC032	1. 093277	1. 093277	1. 093277	1. 093277
HCC033	1. 790188	1. 790188	1. 595541	1. 595541
HCC034	0. 940108	0. 940108	0. 940108	0. 940108
HCC035	2. 683705	2. 683705	2. 683705	2. 011126
HCC036	0. 405518	0. 405518	0. 377057	0. 377057
HCC037	2. 952592	2. 952592	2. 952592	2. 952592
HCC038	1. 094796	1. 094796	1. 094796	1. 094796
HCC206	2. 098343	2. 098343	2. 098343	2. 098343
HCC039	0. 569751	0. 569751	0. 569751	0. 569751
HCC040	1. 094796	1. 094796	1. 094796	1. 094796
HCC041	0. 311993	0. 311993	0. 311993	0. 311993
HCC042	1. 125274	1. 125274	1. 125274	1. 125274

TABLE 17—PROPOSED RISK ADJUSTMENT MODELS FOR MASSACHUSETTS RISK ADJUSTMENT METHODOLOGY FOR 2014—Continued

Factor	Platinum	Gold	Silver	Bronze/catastrophic
HCC207	30. 636640	30. 636640	14. 101544	7. 514115
HCC044	5. 694090	5. 694090	5. 694090	5. 694090
HCC045	1. 011533	1. 011533	1. 011533	1. 011533
HCC208	1. 404092	1. 404092	1. 404092	1. 404092
HCC209	2. 918243	2. 918243	2. 918243	2. 918243
HCC048	1. 345886	1. 345886	1. 182955	1. 182955
HCC049	1. 216549	1. 216549	1. 086774	1. 086774
HCC050	1. 019842	1. 019842	1. 019842	1. 019842
HCC051	1. 343297	1. 343297	1. 343297	1. 343297
HCC052	0. 845301	0. 845301	0. 845301	0. 845301
HCC054	2. 625043	2. 625043	2. 161218	2. 161218
HCC055	0. 848033	0. 848033	0. 772826	0. 772826
HCC056	0. 848033	0. 848033	0. 772826	0. 772826
HCC057	0. 338729	0. 338729	0. 338729	0. 338729
HCC058	0. 338729	0. 338729	0. 338729	0. 338729
HCC059	0. 293976	0. 234661	0. 234661	0. 234661
HCC061	2. 234452	0. 911836	0. 911836	0. 416412
HCC062	0. 551357	0. 551357	0. 416412	0. 416412
HCC063	0. 551357	0. 416412	0. 416412	0. 416412
HCC064	0. 416412	0. 416412	0. 416412	0. 206061
HCC065	0. 315057	0. 315057	0. 315057	0. 206061
HCC066	0. 229744	0. 229744	0. 206061	0. 206061
HCC067	5. 447025	5. 447025	5. 447025	5. 447025
HCC068	2. 224234	2. 224234	2. 224234	2. 224234
HCC069	2. 098343	2. 098343	2. 098343	2. 098343
HCC070	1. 390521	1. 390521	1. 390521	1. 390521
HCC071	1. 209341	1. 209341	1. 209341	1. 209341
HCC072	4. 312296	4. 025404	4. 025404	4. 025404
HCC073	1. 217710	1. 217710	1. 217710	1. 217710
HCC074	1. 302181	0. 980434	0. 980434	0. 980434
HCC075	6. 388482	6. 388482	6. 388482	5. 638247
HCC076	0. 382239	0. 382239	0. 382239	0. 382239
HCC077	30. 588977	30. 588977	17. 179162	17. 179162
HCC078	6. 741034	6. 741034	6. 741034	2. 760821
HCC210	14. 638331	14. 638331	14. 638331	14. 638331
HCC079	4. 963995	4. 963995	2. 922954	2. 760821
HCC080	1. 268543	1. 268543	1. 268543	1. 268543
HCC081	5. 873126	5. 873126	5. 873126	5. 873126
HCC082	3. 409746	3. 409746	3. 409746	3. 170501
HCC083	1. 185868	1. 185868	1. 185868	1. 185868
HCC084	0. 518025	0. 518025	0. 518025	0. 518025
HCC085	3. 358496	3. 358496	3. 358496	3. 358496
HCC086	0. 748725	0. 748725	0. 748725	0. 748725
HCC087	4. 962870	4. 456078	2. 859281	2. 119499
HCC088	0. 748725	0. 748725	0. 748725	0. 748725
HCC092	1. 226834	1. 226834	1. 226834	1. 226834
HCC093	1. 005026	1. 005026	1. 005026	1. 005026
HCC095	6. 224877	6. 224877	4. 744856	4. 744856
HCC096	0. 917154	0. 917154	0. 705810	0. 705810
HCC097	0. 065189	0. 065189	0. 065189	0. 065189
HCC098	0. 065189	0. 065189	0. 065189	0. 065189
HCC100	2. 224234	2. 224234	2. 224234	2. 224234
HCC102	2. 941517	2. 941517	2. 941517	2. 941517
HCC104	2. 598472	2. 598472	2. 598472	2. 598472
HCC105	0. 831150	0. 831150	0. 831150	0. 831150
HCC106	0. 685084	0. 685084	0. 685084	0. 685084
HCC107	8. 318393	7. 678688	4. 188453	3. 417106
HCC108	0. 445827	0. 445827	0. 445827	0. 445827
HCC109	0. 445827	0. 445827	0. 445827	0. 445827
HCC110	0. 327310	0. 327310	0. 298068	0. 298068
HCC111	4. 185448	4. 185448	4. 185448	4. 185448
HCC112	2. 487771	2. 487771	2. 487771	2. 487771
HCC113	0. 459994	0. 459994	0. 459994	0. 459994
HCC114	4. 665050	4. 665050	4. 461861	4. 461861
HCC115	0. 245923	0. 245923	0. 174247	0. 174247
HCC116	1. 846476	1. 846476	1. 846476	1. 846476
HCC117	0. 871167	0. 871167	0. 871167	0. 293138
HCC118	0. 425465	0. 303314	0. 303314	0. 303314
HCC119	0. 975698	0. 975698	0. 975698	0. 975698
HCC120	0. 975698	0. 629335	0. 629335	0. 387584

TABLE 17—PROPOSED RISK ADJUSTMENT MODELS FOR MASSACHUSETTS RISK ADJUSTMENT METHODOLOGY FOR 2014—Continued

Factor	Platinum	Gold	Silver	Bronze/catastrophic
HCC122	0. 156864	0. 156864	0. 156864	0. 156864
HCC125	0. 441244	0. 441244	0. 441244	0. 441244
HCC126	0. 343108	0. 245527	0. 245527	0. 245527
HCC128	3. 935445	3. 086230	3. 086230	3. 086230
HCC130	25. 095071	25. 095071	25. 095071	25. 095071
HCC211	5. 931077	5. 931077	3. 957413	3. 957413
HCC131	0. 609381	0. 609381	0. 609381	0. 548312
HCC132	0. 609381	0. 609381	0. 548312	0. 548312
HCC133	0. 828794	0. 828794	0. 828794	0. 828794
HCC134	0. 333109	0. 333109	0. 179712	0. 179712
HCC135	0. 186132	0. 186132	0. 186132	0. 186132
HCC136	0. 308014	0. 308014	0. 308014	0. 308014
HCC137	2. 229861	2. 019901	1. 191632	1. 191632
HCC138	0. 587042	0. 587042	0. 587042	0. 587042
HCC141	1. 003553	1. 003553	1. 003553	0. 718760
HCC142	0. 557164	0. 557164	0. 480684	0. 431174
HCC143	4. 184966	4. 184966	3. 619387	3. 002414
HCC144	3. 332900	2. 868669	2. 280000	1. 954919
HCC145	1. 171729	0. 774339	0. 774339	0. 216043
HCC146	0. 557164	0. 557164	0. 480684	0. 216043
HCC147	0. 280304	0. 280304	0. 216043	0. 216043
HCC148	12. 543259	12. 543259	6. 014584	6. 014584
HCC150	2. 424426	2. 424426	2. 424426	2. 424426
HCC151	2. 424426	2. 424426	2. 424426	2. 424426
HCC152	0. 333411	0. 322440	0. 322440	0. 322440
HCC154	15. 385354	15. 385354	10. 060566	10. 060566
HCC155	1. 019842	1. 019842	1. 019842	1. 019842
HCC156	0. 378295	0. 378295	0. 378295	0. 378295
HCC157	2. 098343	2. 098343	2. 098343	2. 098343
HCC158	3. 274125	3. 274125	3. 274125	3. 274125
HCC159	0. 995242	0. 995242	0. 995242	0. 995242
HCC160	1. 169886	1. 169886	1. 169886	1. 169886
HCC161	4. 800076	4. 800076	3. 252883	3. 252883
HCC164	4. 416936	4. 416936	4. 416936	4. 416936
HCC168	50. 030035	31. 846702	8. 770478	1. 517088
HCC169	31. 846702	31. 846702	8. 770478	1. 517088
HCC212	5. 348103	4. 531656	2. 869468	1. 517088
HCC170	5. 118321	3. 980982	2. 713315	1. 517088
HCC171	0. 944286	0. 944286	0. 833781	0. 833781
HCC172	0. 766750	0. 282812	0. 282812	0. 282812
HCC213	26. 085463	26. 085463	22. 031148	22. 031148
HCC174	13. 907770	13. 907770	10. 852783	6. 023029
HCC175	0. 417558	0. 391105	0. 391105	0. 145153
HCC176	5. 768476	5. 768476	5. 768476	5. 768476
HCC177	0. 879358	0. 879358	0. 879358	0. 879358
HCC180	4. 989476	4. 989476	4. 989476	4. 989476
HCC181	13. 774728	13. 774728	13. 774728	13. 774728
HCC182	1. 791185	1. 791185	1. 791185	1. 791185
INT01	3. 869565	3. 869565	3. 869565	3. 869565
INT02	1. 608754	1. 608754	1. 608754	1. 608754

Definition of the interaction terms:

INT01 = CANCER*IMMUNE, and INT02 = CVD*VD,

Where,

CANCER = MAX (MAX (of HCC008–HCC014), MAX (of HCC202–HCC205));

IMMUNE = HCC045;

CVD = MAX (of HCC095–HCC103);

VD = MAX (HCC104, HCC105);

TABLE 18—DURATION ADJUSTMENT IN RISK ADJUSTMENT MODELS IN MASSACHUSETTS RISK ADJUSTMENT METHODOLOGY FOR 2014

Month of eligibility	Platinum	Gold	Silver	Bronze
1	0.225160	0.343520	0.474510	1.000000
2	0.341279	0.462802	0.584191	1.000000
3	0.435275	0.550953	0.659754	1.000000
4	0.517282	0.623502	0.719223	1.000000
5	0.591389	0.686292	0.769018	1.000000
6	0.659754	0.742262	1.000000	1.000000
7	0.723686	0.793130	1.000000	1.000000

TABLE 18—DURATION ADJUSTMENT IN RISK ADJUSTMENT MODELS IN MASSACHUSETTS RISK ADJUSTMENT METHODOLOGY FOR 2014—Continued

Month of eligibility	Platinum	Gold	Silver	Bronze
8	1.000000	0.840003	1.000000	1.000000
9	1.000000	1.000000	1.000000	1.000000
10	1.000000	1.000000	1.000000	1.000000
11	1.000000	1.000000	1.000000	1.000000
12	1.000000	1.000000	1.000000	1.000000

TABLE 19—CLINICAL HIERARCHIES IN MASSACHUSETTS RISK ADJUSTMENT METHODOLOGY FOR 2014

DISEASE HIERARCHIES Hierarchical Condition Category (HCC)	If the Condition Category is Listed in this column . . .	. . . Then drop the HCC(s) listed in this column
	Hierarchical Condition Category (HCC) Label	
5	Opportunistic Infections	112, 113, 115
202	Secondary Cancer Except Lymph Node	203, 204, 8, 9, 10, 11, 12, 13
203	Secondary Cancer of Lymph Node	204, 8, 9, 10, 11, 12, 13
204	Cancer of the Brain/Nervous System/Pituitary, Pineal Glands	8, 9, 10, 11, 12, 13
205	Acute Leukemia	8, 9, 10, 11, 12, 13
8	Lung, Upper Digestive Tract, and Other Severe Cancers	9, 10, 11, 12, 13
9	Lymphatic, Head and Neck, Brain, and Other Major Cancers	10, 11, 12, 13
10	Breast, Prostate, Colorectal and Other Cancers and Tumors	11, 12, 13
11	Other Respiratory and Heart Neoplasms	12, 13
12	Other Digestive and Urinary Neoplasms	13
15	Diabetes with Renal Manifestation	16, 17, 18, 19
16	Diabetes with Neurologic or Peripheral Circulatory Manifestation	17, 18, 19
17	Diabetes with Acute Complications	18, 19
18	Diabetes with Ophthalmologic Manifestation	19
25	End-Stage Liver Disease	26, 27, 28, 29, 34, 36
26	Cirrhosis of Liver	27, 29
27	Chronic Hepatitis	29
28	Acute Liver Failure/Disease	29
31	Intestinal Obstruction/Perforation	34, 36
32	Pancreatic Disease	36
33	Inflammatory Bowel Disease	34, 36
34	Peptic Ulcer, Hemorrhage, Other Specified Gastrointestinal Disorders	36
38	Rheumatoid Arthritis and Inflammatory Connective Tissue Disease	39, 40
206	Spinal Stenosis	39
207	Hemophilia	44, 208
44	Severe Hematological Disorders	208
209	Toxic/Unspecified Encephalopathy	48, 50
48	Delirium and Encephalopathy	50
49	Dementia	50
51	Drug/Alcohol Psychosis	52
54	Schizophrenia	55, 56, 57, 58, 59
55	Major Depressive, Bipolar, and Paranoid Disorders	56, 57, 58, 59
56	Reactive and Unspecified Psychosis	57, 58, 59
57	Personality Disorders	58, 59
58	Depression	59
61	Profound Mental Retardation/Developmental Disability	62, 63, 64, 65, 66
62	Severe Mental Retardation/Developmental Disability	63, 64, 65, 66
63	Moderate Mental Retardation/Developmental Disability	64, 65, 66
64	Mild/Unspecified Mental Retardation/Developmental Disability	65, 66
65	Other Developmental Disability	66
67	Quadriplegia, Other Extensive Paralysis	68, 69, 76, 100, 157
68	Paraplegia	69, 76, 100, 157
69	Spinal Cord Disorders/Injuries	39, 76, 157
70	Muscular Dystrophy	76
71	Polyneuropathy	76
72	Multiple Sclerosis	76
73	Parkinson's and Huntington's Diseases	76
74	Seizure Disorders and Convulsions	76
75	Coma, Brain Compression/Anoxic Damage	209, 48, 50, 76
77	Respirator Dependence/Tracheostomy Status	78, 210, 79
210	Post Trauma/Surgery Pulmonary Insufficiency, Incl Adult Respir Distress Syndrom.	79
78	Respiratory Arrest	79
81	Acute Myocardial Infarction	82, 83, 84
82	Unstable Angina and Other Acute Ischemic Heart Disease	83, 84
83	Angina Pectoris/Old Myocardial Infarction	84

TABLE 19—CLINICAL HIERARCHIES IN MASSACHUSETTS RISK ADJUSTMENT METHODOLOGY FOR 2014—Continued

DISEASE HIERARCHIES Hierarchical Condition Category (HCC)	If the Condition Category is Listed in this column . . .	. . . Then drop the HCC(s) listed in this column
85	Heart Infection/Inflammation, Except Rheumatic	86, 88
86	Valvular and Rheumatic Heart Disease	88
87	Major Congenital Cardiac/Circulatory Defect	88
92	Specified Heart Arrhythmias	93
95	Cerebral Hemorrhage	96, 97, 98
96	Ischemic or Unspecified Stroke	97, 98
97	Precerebral Arterial Occlusion and Transient Cerebral Ischemia	98
104	Vascular Disease with Complications	105, 106
105	Vascular Disease	106
107	Cystic Fibrosis	108, 109, 110, 115
108	Chronic Obstructive Pulmonary Disease	109, 110, 115
109	Fibrosis of Lung and Other Chronic Lung Disorders	110, 115
110	Asthma	115
111	Aspiration and Specified Bacterial Pneumonias	112, 113, 115
112	Pneumococcal Pneumonia, Empyema, Lung Abscess	113, 115
113	Viral and Unspecified Pneumonia, Pleurisy	115
114	Pleural Effusion/Pneumothorax	115
119	Proliferative Diabetic Retinopathy and Vitreous Hemorrhage	120
128	Kidney Transplant Status	130, 131, 132, 136, 175
130	Dialysis Status	211, 131, 132, 136
131	Non-Acute Renal Failure	132, 136
132	Nephritis	136
137	Female Infertility	138
141	Ectopic Pregnancy	142, 146, 147
142	Miscarriage/Abortion	146, 147
143	Completed Pregnancy With Major Complications	144, 145, 146, 147
144	Completed Pregnancy With Complications	145, 146, 147
145	Completed Pregnancy Without Complications (Normal Delivery)	146, 147
146	Uncompleted Pregnancy With Complications	147
150	Extensive Third-Degree Burns	151
154	Severe Head Injury	209, 48, 50, 75, 76, 155, 156
155	Major Head Injury	50, 156
157	Vertebral Fractures	206, 39
161	Traumatic Amputation	177
168	Extremely Low Birthweight Neonates	169, 212, 170, 171, 172
169	Very Low Birthweight Neonates	212, 170, 171, 172
212	Low Birthweight (1500–2499 grams) or Unspecified	171, 172
170	Serious Perinatal Problem Affecting Newborn	171, 172
171	Other Perinatal Problems Affecting Newborn	172
213	Bone Marrow Transplant Status/Complications	175
174	Major Organ Transplant Status	175

k. Caveats and Limitations

In preparing its application Massachusetts relied on data from Massachusetts APCD, Commonwealth Care and Marketscan® New England in developing the risk adjustment models and additional adjustment factors, and as such the results may not apply to other States' risk adjustment programs. Additionally, there are limitations in the datasets which may affect the accuracy and robustness of the models and factors presented here.

C. Provisions and Parameters for the Transitional Reinsurance Program

The Affordable Care Act directs the establishment of a transitional reinsurance program in each State to help stabilize premiums for coverage in the individual market from 2014 through 2016. The reinsurance program is designed to alleviate the need to build into premiums the risk of enrolling individuals with significant unmet medical needs. By equitably stabilizing premiums in the individual market throughout the United States, the reinsurance program is intended to help millions of Americans purchase affordable health insurance, reduce unreimbursed usage of hospital and other medical facilities by the uninsured, and thereby lower medical expenses and premiums for all people with private health insurance.

In the proposed rule, we aimed to administer the reinsurance program to provide reinsurance payments in an efficient, fair, and accurate manner, where reinsurance assistance is needed most, to effectively stabilize premiums nationally. In addition, we stated our intent to implement the reinsurance program in a manner that minimizes the administrative burden of collecting contributions and making reinsurance payments. For example, we proposed to collect contributions from health insurance issuers and self-insured group health plans in all States, including States that elect to operate reinsurance. We also stated our intent to simplify collections by using a uniform per capita contribution rate. In addition, in the HHS-operated reinsurance program, we proposed to calculate reinsurance payments using the same distributed approach for data collection that we will use when operating the risk adjustment program on behalf of States.[15] This would permit issuers to receive reinsurance payments using the same systems established for the risk adjustment program, resulting in less administrative burden and lower costs,

[15] See our discussion of this distributed data collection approach in section III.G. of this final rule.

while maintaining the security of identifiable health information.

In the proposed rule, we proposed uniform reinsurance payment parameters to be used across all States, regardless of whether the State, or HHS on behalf of a State, operates reinsurance. In addition, we proposed an annual calendar under which reinsurance contributions would be collected from all contributing entities, and reinsurance payments would be disbursed to issuers of reinsurance-eligible plans. Furthermore, we proposed to distribute reinsurance payments based on the need for reinsurance payments in each State. We believe that allocating contributions in this manner better meets States' individual reinsurance needs and fulfills HHS's obligation to provide equitable allocation of these funds under section 1341(b)(2)(B) of the Affordable Care Act, than does a policy that limits the disbursement of reinsurance payments only to the State in which the contributions are collected.

Comment: One commenter requested that HHS consider extending the reinsurance program past 2016.

Response: Section 1341 of the Affordable Care Act mandates that the transitional reinsurance program operate in the three year period beginning January 1, 2014, which we interpret to mean that the program will operate in benefit years 2014, 2015 and 2016. As a result, we have no statutory authority to extend the program. We note that, under this final rule, reinsurance payments for benefit year 2016 will be made in 2017, and section 1341(a)(4)(B) provides that amounts remaining unexpended as of December 2016 may be used to make payments under any reinsurance program of a State in the individual market in effect in the two-year period beginning on January 1, 2017.

1. State Standards Related to the Reinsurance Program

a. State-Operated Reinsurance Programs, Generally

In the proposed rule, we set forth a reinsurance contribution and payment process, and the uniform contribution rate and reinsurance payment parameters that would apply to all States in the 2014 benefit year. We proposed to amend § 153.100(a)(1) to delete the reference to State modification of data collection frequency as set forth in the Premium Stabilization Rule. That deletion would remove the ability of a State electing to operate reinsurance to modify, via a State notice of benefit and payment parameters, the data collection frequency for issuers to receive reinsurance payments. Under § 153.100(a)(1), a State establishing a reinsurance program may still modify the data requirements for health insurance issuers to receive reinsurance payments, provided that the State publishes a State notice of benefit and payment parameters that specifies those modifications.

In § 153.100(a)(2), we proposed that a State electing to collect additional reinsurance contributions for purposes of making supplemental reinsurance payments or using additional funds for supplemental reinsurance payments under § 153.220(d) publish supplemental State reinsurance payment parameters in its State notice of benefit and payment parameters. To create the most effective reinsurance program, we proposed to collect reinsurance contributions on behalf of all States from both health insurance issuers and self-insured group health plans in the aggregate, and we proposed to disburse reinsurance payments based on a State's need for reinsurance payments, not based on where the contributions were collected. As a result, HHS would no longer be able to attribute additional funds for administrative expenses back to a State. We therefore proposed to amend § 153.100(a)(3) of the Premium Stabilization Rule to clarify that any additional contributions collected for administrative expenses must be collected by the State operating reinsurance.

Section 1341 of the Affordable Care Act provides that States may elect to operate reinsurance. Based on HHS's communications with States, as of February 25, 2013, Maryland and Connecticut are the only States electing to operate reinsurance for 2014. Pursuant to § 153.100, a State that wishes to collect additional reinsurance funds pursuant to § 153.220(d) must publish the supplemental contribution rate and supplemental State reinsurance payment parameters in a State notice of benefit and payment parameters, which for 2014 must be published by the 30th day following the publication of this final rule.

We are finalizing these provisions as proposed, with a technical amendment to § 153.210(a)(2) in which we clarify that a State's obligation to ensure that each applicable reinsurance entity operates in a distinct geographic area applies regardless of whether the State contracts with or establishes the applicable reinsurance entities. As we also clarify below, governmental entities may serve as applicable reinsurance entities. We are also amending § 153.100(a)(2) by replacing the cross-reference to § 153.220(d) with § 153.220(d)(1). We are making corresponding revisions in § 153.100(d)(2); and § 153.110(b); 153.400(a).

Comment: One commenter requested that HHS prohibit States operating reinsurance from modifying the data requirements for health insurance issuers to receive reinsurance payments.

Response: Although we recognize the efficiencies to multi-State issuers of having a uniform set of data requirements, we believe that a State should have the flexibility to collect the data it deems necessary, in the manner it deems most appropriate, to calculate reinsurance payments for issuers of non-grandfathered individual market plans in the State. Accordingly, we will permit State flexibility regarding data requirements. As set forth in § 153.100(a)(1), a State modifying the data requirements must describe those requirements in its State notice of benefit and payment parameters.

Comment: One commenter asked that HHS permit a governmental entity to be eligible to serve as an applicable reinsurance entity.

Response: We interpret the definition of an applicable reinsurance entity in section 1341(c)(1) of the Affordable Care Act as a ''not-for-profit organization,'' the purpose of which is to stabilize premiums in the first three years of Exchange operation and the duties of which are to carry out the reinsurance program, to be broad enough to include a governmental entity. Accordingly, we believe that an applicable reinsurance entity is a not-for-profit organization that is exempt from taxation under Chapter 1 of the Internal Revenue Code of 1986, including a governmental entity and a quasi-governmental entity that was not created for and does not operate to make a profit, and carries out reinsurance functions under this part on behalf of the State.

Comment: One commenter requested that HHS permit a State to obtain a waiver from the reinsurance program set forth in section 1341 of the Affordable Care Act.

Response: HHS has no authority to grant such a waiver. As set forth in the Premium Stabilization Rule, if a State does not elect to operate reinsurance, HHS will operate reinsurance on behalf of the State.

Comment: One commenter asked whether HHS will implement an approval process for States choosing to operate reinsurance, similar to the process used to approve States choosing to operate the risk adjustment program.

Response: Unlike the risk adjustment program, there will be no formal approval process for State-operated reinsurance programs. However, HHS will establish a consultative pre-implementation process to ensure that each State operating reinsurance is ready to operate beginning in 2014. HHS intends to work closely with States throughout the duration of the reinsurance program to ensure States' operational readiness.

Comment: One commenter sought clarification on the functions that a State operating reinsurance must perform.

Response: This final rule sets forth a number of functions that a State operating reinsurance must perform, consistent with the functions of the HHS-operated reinsurance program. For example, under § 153.240, a State operating reinsurance must ensure that the State's applicable reinsurance entity collects data required to calculate reinsurance payments, makes reinsurance payments, and provides a process for reinsurance-eligible plans that do not generate individual enrollee claims in the normal course of business to submit claims. In addition, a State operating reinsurance must notify issuers of requests for reinsurance payments made and actual reinsurance payments to be provided. In addition to performing payment functions, a State operating reinsurance may elect to collect additional funds or use State funds under § 153.220(d)(1)(ii) or § 153.220(d)(2) (proposed as (d)(3) in the proposed rule) to fund administrative expenses or set up and fund supplemental reinsurance payment parameters that ''wrap around'' the uniform reinsurance payment parameters.

b. Reporting to HHS

In § 153.210(e) of the proposed rule, we stated that a State establishing the reinsurance program would be required to provide information to HHS regarding all requests for reinsurance payments received from all reinsurance-eligible plans for each quarter during the benefit year in the State. In § 153.240(b)(2), we proposed that a State, or HHS on behalf of the State, would use the information collected by HHS or submitted under § 153.210(e) to provide issuers of reinsurance-eligible plans with quarterly updates of requests for reinsurance payments for the plan under both the uniform payment parameters and any State supplemental payments parameters set forth under § 153.232, as determined by HHS or the State's applicable reinsurance entity, as applicable. This information could be used by an individual market issuer in developing rates in subsequent benefit years. We are finalizing these provisions as proposed, with modifications in § 153.240(b)(2) to clarify that a State must provide to an issuer of a reinsurance-eligible plan the calculation of the total reinsurance payments requested under the national reinsurance payment parameters and State supplemental reinsurance payment parameters, on a quarterly basis during the applicable benefit year in a timeframe and manner determined by HHS.

Comment: Several commenters supported the proposal that HHS or States operating reinsurance provide to issuers quarterly updates of requests for reinsurance payments made under the uniform payment parameters and State supplemental payment parameters, as applicable. Several commenters urged HHS not to require a State operating reinsurance to provide these quarterly estimates.

Response: Because the purpose of the reinsurance program is to help stabilize premiums, and because interim information on reinsurance claims will be useful for issuers in setting rates in subsequent benefit years, we are finalizing § 153.240(b) as proposed.

Comment: One commenter requested clarification on whether updates of reinsurance payment requests made would be provided on a rolling basis throughout the benefit year, or only after all reinsurance payment requests have been submitted. Commenters suggested that total payment requests across all issuers be specified so that issuers can estimate whether total payments will exceed total contributions.

Response: A State operating reinsurance or HHS, on behalf of the State, will issue reports on a quarterly basis on the total amount of reinsurance requests submitted. We appreciate the suggestions for the quarterly reporting format, and will take them under consideration. We anticipate issuing guidance for States and issuers regarding quarterly reporting.

c. Additional State Collections

In § 153.220(d), we proposed that a State operating reinsurance may elect to collect more than the amounts based on the national contribution rate set forth in the annual HHS notice of benefit and payment parameters for administrative expenses of the applicable reinsurance entity or for additional reinsurance payments. In addition, under § 153.220(d)(2), we proposed that a State must notify HHS within 30 days after publication of the draft annual HHS notice of benefit and payment parameters for the applicable benefit year of the additional contribution rate that it elects to collect. We are finalizing these provisions as proposed with the following modification: we are deleting § 153.220(d)(2), which required a State to notify HHS within 30 days after publication of the draft annual HHS notice of benefit and payment parameters for the applicable benefit year of the additional contribution rate that it elects to collect.

Comment: We received several comments asking HHS to eliminate the requirement set forth in § 153.220(d)(2), which provided that a State must notify HHS within 30 days after publication of the draft annual HHS notice of benefit and payment parameters for the applicable benefit year of the additional contribution rate that it elects to collect. However, one commenter encouraged HHS to keep this requirement.

Response: Because HHS will no longer collect additional contributions on behalf of a State, and will not immediately need this information, we are removing § 153.220(d)(2) from this final rule. Any State operating reinsurance and electing to collect additional contributions under § 153.220(d) must set forth any additional contribution rate that it elects to collect in its State notice of benefit and payment parameters.

Comment: One commenter asked HHS to clarify that States may collect additional administrative expenses only when a State is operating reinsurance.

Response: Only a State operating reinsurance is permitted to collect additional administrative expenses under § 153.220(d). The State must set forth any additional contribution rate in its State notice of benefit and payment parameters.

Comment: One commenter asked HHS to prohibit States from collecting additional funds for administrative expenses.

Response: To allow State flexibility in operating reinsurance, a State operating reinsurance will be permitted to collect additional funds for administrative expenses as the State deems necessary.

Comment: Several commenters opposed the collection of additional funds by States from self-insured plans, and urged HHS to specify in regulatory text that States cannot collect from self-insured plans covered by ERISA.

Response: We reiterate that nothing in section 1341 of the Affordable Care Act or 45 CFR part 153 of this final rule gives a State the authority to collect any funds—whether under the national contribution rate or under an additional State contribution rate—from self-

insured group health plans covered by ERISA.

Comment: One commenter requested that HHS specify that the Federal Employees Health Benefit Act prohibits States from imposing additional State reinsurance fund collections on Federal Employees Health Benefits Program (FEHB) plans.

Response: Although § 153.220(d) provides that a State may elect to collect additional reinsurance contributions for administrative expenses or reinsurance payments, we do not interpret section 1341 of the Affordable Care Act or 45 CFR part 153 of this final rule as giving States any additional authority to collect from contributing entities. Any such authority must come from other State or Federal law.

d. State Collections

In § 153.220(a), we proposed that if a State establishes a reinsurance program, HHS will collect all reinsurance contributions from all contributing entities for that State under a national contribution rate. In § 153.220(d)(3) of the proposed rule (which we now renumber as § 153.220(d)(2)), we proposed that States may use additional funds, which were not collected as additional reinsurance contributions, to make supplemental reinsurance payments under the State supplemental reinsurance payment parameters. This would allow States to use other revenue sources, such as funds collected for State high-risk pools. This would also ensure that additional State collections for reinsurance payments and other State funds may be used to reduce premiums. We are finalizing these provisions as proposed.

Comment: Several commenters asked that HHS permit States to collect contributions from health insurance issuers. Other commenters supported the proposed centralized collection of reinsurance contribution under the national contribution rate.

Response: HHS will collect contributions from health insurance issuers and self-insured group health plans in all States, including States that elect to operate reinsurance. This will allow for a centralized and streamlined process for the collection of contributions, and will avoid inefficiencies resulting from the use of different collection processes in different States. Federal collections will also leverage economies of scale, reducing the overall administrative costs of the transitional reinsurance program.

e. High-Risk Pools

Section 1341(d) of the Affordable Care Act and § 153.250 of the Premium Stabilization Rule provide that a State must eliminate or modify its high-risk pool to the extent necessary to carry out the transitional reinsurance program. However, any changes made to a State high-risk pool must comply with the terms and conditions of Grants to States for Operation of Qualified High-Risk Pools (CFDA 93.780), as applicable. Under § 153.400(a)(2)(iii), we proposed that State high-risk pools would be excluded from making reinsurance contributions and would not receive reinsurance payments.

The Affordable Care Act permits a State to coordinate its high-risk pool with the reinsurance program ''to the extent not inconsistent'' [16] with the statute. We clarify that nothing in the Premium Stabilization Rule or this final rule prevents a State that establishes the reinsurance program from using State money designated for the State's high-risk pool towards the reinsurance program. However, a State may not use funds collected for the Affordable Care Act reinsurance program for its high-risk pool. Finally, a State could designate its high-risk pool as its applicable reinsurance entity, provided that the high-risk pool meets all the criteria for being an applicable reinsurance entity.

Comment: Several commenters requested that we permit State high-risk pools to be eligible for reinsurance payments for their high-risk enrollees. Commenters stated that the sudden termination of high-risk pools in 2014 would result in high-risk pool enrollees flooding the individual market, potentially resulting in premium increases for all individual market enrollees and a loss of access to providers currently administering care for high-risk pool enrollees.

Response: Under the definition of a reinsurance-eligible plan in § 153.20 of the Premium Stabilization Rule, State high-risk pools are not eligible to receive reinsurance payments for their high-risk enrollees because high-risk pool coverage is not individual market coverage. We note that if a high-risk pool were to be structured as individual market coverage subject to the market reform rules, it would be eligible for reinsurance payments and would also, therefore, be a contributing entity.

Comment: Several commenters asked that HHS clarify that States can continue to operate high-risk pools to complement the reinsurance program and to provide continuity of coverage to risk pool enrollees.

Response: States have the flexibility to decide whether to maintain, phase-out, or eliminate their high-risk pools. Because State high-risk pools and the reinsurance program both target high-cost enrollees, high-risk pools can operate alongside reinsurance serving a distinct subset of the target population.

Comment: Several commenters asked that the Federal government continue to provide funding for the State High Risk Pool Grant program.

Response: Funding for the State High Risk Pool Grant Program is not addressed in this final rule.

2. Contributing Entities and Excluded Entities

Section 1341 of the Affordable Care Act provides that health insurance issuers and third party administrators on behalf of group health plans must make payments to an applicable reinsurance entity. In the proposed rule, we stated that, with respect to insured coverage, issuers are responsible for making reinsurance contributions. With respect to a self-insured group health plan, the plan is responsible, although a third party administrator (TPA) or administrative services only (ASO) contractor may be utilized to transfer reinsurance contributions on behalf of a plan. A self-insured, self-administered group health plan without a TPA or ASO contractor would make its reinsurance contributions directly. For the reasons described above and in the preamble of the proposed rule, we are modifying the definition of ''contributing entity'' in § 153.20 to clarify that a ''contributing entity'' is a health insurance issuer or a self-insured group health plan.

Comment: Several commenters asked that HHS amend the definition of contributing entity, clarifying the liability of TPAs.

Response: We have amended the definition of ''contributing entity'' in § 153.20 to include the clarification we provided in the proposed rule at 77 FR 73152. This amended definition states that a contributing entity is a health insurance issuer or a self-insured group health plan. Thus, we clarify that a self-insured group health plan is ultimately responsible for the reinsurance contributions, even though it may elect to use a TPA or ASO contractor to transfer the reinsurance contributions.

Comment: Several commenters sought clarification regarding whether self-insured group health plans may remit reinsurance contributions directly to HHS even if the plan otherwise

[16] See section 1341(d) of the Affordable Care Act.

contracts with a TPA or ASO contractor for administration of benefits.

Response: A self-insured group health plan may elect to make its reinsurance contributions directly to HHS or through a TPA or an ASO contractor.

Comment: One commenter suggested that requiring issuers to submit a separate payment for each insured group would add significant administrative burden.

Response: HHS will provide details on the process for submission of reinsurance contributions in future guidance.

Comment: One commenter stated that the proposed rule does not address whether a TPA may charge administrative fees for the additional work it will undertake to collect reinsurance fees and forward them to HHS.

Response: Any fee for such services would be negotiated between the plan and the TPA or ASO contractor. We note that the program is designed to minimize administrative costs, which we expect to be relatively low.

Comment: Several commenters asked that HHS clarify that a plan with several TPAs should determine if and which TPA will calculate the enrollment count and submit reinsurance payments.

Response: The self-insured group health plan is liable for reporting enrollment counts and making reinsurance contributions. It may utilize any TPA or ASO contractor it wishes (or none) to perform these functions.

Under section 1341(b)(3)(B)(i) of the Affordable Care Act, contribution amounts for reinsurance are to reflect, in part, an issuer's ''fully insured commercial book of business for all major medical products.'' We interpret this statutory language to mean that reinsurance contributions are not required for coverage that is not ''major medical coverage'' or for health insurance coverage that is non-commercial. We also interpret this statutory language to exclude expatriate health coverage, as defined by the Secretary. HHS plans to define expatriate health coverage in the near future.

(1) *Major Medical Coverage:* In § 153.400(a)(1)(i), we proposed that a contributing entity make reinsurance contributions for its health coverage except to the extent that such coverage is not ''major medical coverage.'' Section 1341(b)(3)(B)(i) of the Affordable Care Act refers to ''major medical products,'' but does not define the term. The preamble to the proposed rule at 77 FR 73152 discussed the definition that should apply for reinsurance purposes. We are finalizing the provisions as proposed.

Comment: One commenter requested that we codify in regulation text the description of major medical coverage that was set forth in preamble.

Response: We reiterate that for purposes of the reinsurance program only, our view is that major medical coverage is health coverage, which may be subject to reasonable enrollee cost sharing, for a broad range of services and treatments including diagnostic and preventive services, as well as medical and surgical conditions provided in various settings, including inpatient, outpatient, and emergency room settings. Coverage that is limited in scope (for example, dread disease coverage, hospital indemnity coverage, or stand-alone vision coverage or stand-alone dental coverage), or extent (for example, coverage that is not subject to section 2711 of the PHS Act and its implementing regulations) would not be major medical coverage.[17]

In the proposed rule, we stated that when an individual has both Medicare coverage and employer-provided group health coverage, the Medicare Secondary Payer (MSP) rules under section 1862(b) of the Act would apply, and the group health coverage would be considered major medical coverage only if the group health coverage is the primary payer of medical expenses (and Medicare is the individual's secondary payer) under the MSP rules. For example, a working 68-year-old employee enrolled in a group health plan who, under the MSP rules, is a beneficiary for whom Medicare is the secondary payer would be counted for purposes of reinsurance contributions. However, a 68-year-old retiree enrolled in a group health plan who, under the MSP rules, is a beneficiary for whom Medicare is the primary payer would not be counted for purposes of reinsurance contributions. Similarly, an individual covered under a group health plan with only Medicare Part A (hospitalization) benefits (where Medicare is the primary payer) would not be counted for purposes of reinsurance contributions because the group health coverage would not be considered major medical coverage. We also stated that individuals entitled to Medicare because of disability or end-stage renal disease that have other primary coverage under the MSP rules would be treated consistently with the working aged, as outlined above.

We are finalizing the proposed provisions with the following revisions, described below: (a) We are modifying the exception in § 153.400(a)(1)(iii) to exclude from reinsurance contributions expatriate health coverage, as defined by the Secretary; (b) we are adding § 153.400(a)(1)(iv) to codify the Medicare coordination rule; and (c) we are adding § 153.400(a)(2)(xiii) to exclude a self-insured group health plan or health insurance coverage that is limited to prescription drug benefits from reinsurance contributions.

Comment: Several commenters supported the proposed treatment of group health coverage that is considered secondary to Medicare under the MSP rules; some requested that the Medicare coordination rule contained in the preamble of the proposed rule appear in regulation text.

Response: We have added paragraph (iv) to § 153.400(a)(1) to codify the rule in regulation text. We have included this rule at § 153.400(a)(1) to clarify that, to the extent a plan or coverage applies to individuals with respect to which benefits under Title XVIII of the Social Security Act (Medicare) are primary under the MSP rules, reinsurance contributions are not required on behalf of those enrollees under that plan or coverage. In order for a contributing entity to determine its enrollment count as required by § 153.405 while taking into account enrollees for which the employer group health coverage is considered secondary to Medicare under the MSP rules, we clarify that the contributing entity may use any reasonable method of estimating the number or percentage of its enrollees. For example, a contributing entity may calculate the percentage of enrollees for which the employer group health coverage is secondary under the MSP rules on the dates it uses when applying the snapshot counting method or actual count method, or on other periodic dates, and reduce the enrollment count calculated using one of the methods in § 153.405 by that percentage. A contributing entity may also calculate the total enrollment of individuals for which the employer group health coverage is secondary under the MSP rules on the last day of the third quarter and reduce the enrollment count that was calculated using one of the methods in § 153.405.

Comment: Several commenters requested that employer-provided retiree coverage be excluded from reinsurance contributions.

[17] See Section 7F of the National Association of Insurance Commissioners (NAIC) Model Regulation to Implement the Accident and Sickness Insurance Minimum Standards Model Act, (MDL–171) for a definition of major medical expense coverage. Available at: *http://naic.org/committees_index_model_description_a_c.htm#accident_health.*

Response: We have no statutory authority to make the requested change under section 1341 of the Affordable Care Act. We clarify that employer-provided retiree coverage is subject to reinsurance contributions unless one of the general exceptions applies (for example, the coverage is not major medical coverage).

Comment: One commenter requested that we expand the Medicare coordination rule to exclude from reinsurance contributions *any* employer-provided coverage that is secondary to any other coverage.

Response: We decline to make this exclusion because we believe that it would be difficult for an individual sponsor or issuer to determine and verify (and it would be difficult for HHS to confirm) without extensive coordination with other issuers and sponsors which enrollees have another source of coverage, whether that other source of coverage is major medical coverage, and which coverage is primary. We also believe that few individuals will have two sources of primary major medical coverage.

Comment: Two commenters requested additional clarification as to how the MSP rules interact with the reinsurance program when an individual has employer-provided group health coverage and is eligible for Medicare due to end-stage renal disease or disability.

Response: If an individual is eligible for Medicare due to end-stage renal disease or disability, then whether reinsurance contributions would be required on behalf of the individual would depend upon whether the Medicare coverage is primary, as with the working-aged.

Comment: A few commenters requested that the preamble language in the proposed rule clarifying that a separate plan that provides coverage for prescription drugs is excluded from reinsurance contributions be codified in regulation text. One commenter requested clarification that retiree drug plans including employer group waiver plans and other employer-sponsored Part D plans are excluded from reinsurance contributions.

Response: We are amending § 153.400(a)(2) to include a new paragraph (xiii) providing that a self-insured group health plan or health insurance coverage that is limited to prescription drug benefits is excluded from reinsurance contributions. Since they only provide coverage for prescription drug benefits, these plans are not major medical coverage. We also note that § 153.400(a)(2)(ii)(A) contains an exception for coverage provided by an issuer under contract to provide benefits under Medicare because these private Medicare plans are not part of an issuer's commercial book of business (as discussed in the next section of this preamble).

(2) *Commercial Book of Business:* The second general exception at § 153.400(a)(1)(ii) from the reinsurance contribution requirement applies to health insurance coverage that is not part of an issuer's commercial book of business. Section 1341(b)(3)(B)(i) of the Affordable Care Act refers to a ''commercial book of business,'' which we proposed to interpret to refer to large and small group health insurance policies and individual market health insurance policies. For example, products offered by an issuer under Medicare Part C or D would be part of a ''governmental'' book of business, not a commercial book of business. Similarly, a plan or coverage offered by a Tribe to Tribal members and their spouses and dependents, and other persons of Indian descent closely affiliated with the Tribe in the capacity of the Tribal members as Tribal members (and not in their capacity as current or former employees of the Tribe or their dependents) would not be part of a commercial book of business. But a plan or coverage offered by the Federal government, a State government, or a Tribe to employees (or retirees or dependents) because of a current or former employment relationship would be part of a commercial book of business.

We are finalizing the provisions as proposed.

Comment: One commenter agreed that coverage offered to Federal, State, or Tribal employees should be subject to reinsurance contributions, and that this coverage would be part of an issuer's commercial book of business. Another commenter stated that since Federal and State employee plans make up a significant share of the market's large group enrollment, these plans should be included in a carrier's book of business for purposes of the reinsurance contribution.

Response: For reinsurance purposes, we agree that insured coverage offered to Federal, State or Tribal employees is part of an issuer's commercial book of business. As discussed in the preamble to the proposed rule, we interpret ''commercial book of business'' to refer to insured large and small group policies and individual market policies.

(3) Policy filed and approved by a State: The third proposed general exception from reinsurance contributions at § 153.400(a)(1)(iii) was for insured coverage not filed or approved by a State. As noted in the preamble to the proposed rule at 77 FR at 73153, this exception was intended primarily to address group expatriate coverage for individuals whose work requires them to spend a substantial period of time overseas. We are amending § 153.400(a)(1)(iii) so that expatriate health coverage, as defined by the Secretary, is excluded from reinsurance contributions.

Comment: Some commenters requested that all expatriate coverage be excluded from reinsurance contributions, including coverage filed with and approved by a State, as well as self-insured expatriate coverage.

Response: As described above, we are amending this provision so that all expatriate health coverage, as defined by the Secretary, is excluded from reinsurance contributions. We plan to define expatriate health coverage, as well as explain the applicability of the Affordable Care Act to such coverage, in the near future.

Comment: A few commenters noted considerable variation in filing methods for issuers of health insurance coverage in the large group market. The commenters expressed concern that issuers that should make reinsurance contributions may be excluded because of the different filing and approval requirements. For example, some States may not require explicit approval of certain new policy forms, but instead those forms may be deemed approved via issuer certification. One commenter requested clarification as to whether an issuer that is regulated by a State agency other than a department of insurance would be subject to reinsurance contributions under the ''filed and approved by a State'' language.

Response: We recognize that States can and do use different filing methods to obtain the information from issuers necessary to carry out their regulatory responsibilities. However, we are amending § 153.400(a)(1)(iii) so that the exception from reinsurance contributions applies to all expatriate health coverage, as defined by the Secretary.

We proposed in § 153.400(a)(2) to explicitly exclude the following types of plans and coverage from reinsurance contributions. We are finalizing these provisions as proposed.

(a) *Excepted benefits.* We proposed no change in policy with respect to plans or health insurance coverage that consist solely of excepted benefits as defined by section 2791(c) of the PHS Act, as currently described in § 153.400(a)(2)(i) of the Premium Stabilization Rule.

Comment: A few commenters noted that stand-alone dental or vision coverage is excluded from reinsurance contributions, and requested that other dental or vision coverage should be excluded as well. One commenter suggested that reinsurance contributions should not apply to ''carve-out'' arrangements that must be offered alongside an employer's major medical coverage that are similar to prescription drug carve-outs, for example, behavioral health and transplant coverage.

Response: An employer decides whether to offer group health coverage, the scope of the coverage, and its structure. An employer that provides dental or vision coverage may do so on a stand-alone basis, in which case the benefits may qualify as excepted benefits, or may include the coverage with the major medical benefits as part of a group health plan. Excepted benefits are not subject to reinsurance contributions.

(b) *Private Medicare, Medicaid, CHIP, State high-risk pools, and Basic Health Plans:* Both Medicare and Medicaid have fee-for-service or traditional components, as well as managed care components in which private health insurance issuers, under contract with HHS, deliver the requisite benefits. As discussed in the preamble to the Premium Stabilization Rule, these private Medicare or Medicaid plans are excluded from reinsurance contributions because they are not part of a commercial book of business. We also clarified in the proposed rule that for purposes of reinsurance contributions, programs under the CHIP, Federal and State high-risk pools (including the Pre-Existing Condition Insurance Plan Program under section 1101 of the Affordable Care Act), and Basic Health Plans described in section 1331 of the Affordable Care Act are similarly excluded from reinsurance contributions because they are not part of a commercial book of business.

(c) *Health Reimbursement Arrangements (HRAs) integrated with a group health plan.* Section 153.400(a)(2)(v) of the proposed rule excluded HRAs that are integrated with a group health plan offered in conjunction with a major medical plan (integrated HRAs) from reinsurance contributions. The preamble to the proposed rule noted that reinsurance contributions generally would be required for that group health plan.

Comment: Several commenters requested that stand-alone HRAs be excluded from reinsurance contributions. Alternatively, some commenters requested that the ''one covered life'' rule that the Fees on Health Insurance Policies and Self-Insured Plans for the Patient-Centered Outcomes Research Trust final rule (the PCORTF Rule) [18] applies to stand-alone HRAs also apply for purposes of reinsurance contributions. Some commenters requested clarification on when an HRA is ''integrated'' with a traditional group health plan or health insurance coverage, on how to classify arrangements similar to HRAs that do not meet the technical definition of an HRA, and regarding the treatment of specific types of HRAs (for example, an HRA that only may be used to pay premiums under a fully insured plan).

Response: As described above, integrated HRAs are excluded from reinsurance contributions. We note that the Department of Labor, the U.S. Treasury and HHS recently issued guidance on certain HRA-related issues in ''Affordable Care Act Implementation FAQs-Set 11,'' which can be found at *http://cciio.cms.gov/resources/factsheets/aca_implementation_faqs11.html.*

(d) *Health saving accounts (HSAs):* Section 153.400(a)(2)(vi) of the proposed rule excluded HSAs from reinsurance contributions. An HSA is an individual arrangement that is offered along with a high deductible health plan. For purposes of reinsurance contributions, we believe that an HSA is not major medical coverage because it consists of a fixed amount of funds that are available for both medical and non-medical purposes, and thus would be excluded from reinsurance contributions. We note that reinsurance contributions generally would be required for the high deductible health plan because it is major medical coverage.

Comment: Some commenters requested clarification on HSAs ''integrated with a group health plan'' for reinsurance contributions purposes.

Response: HSAs are excluded from reinsurance contributions because they consist of a fixed amount of funds that are available for both medical and non-medical purposes and therefore do not provide major medical coverage.

(e) *Health flexible spending arrangements (FSAs):* Health FSAs are usually funded by an employee's voluntary salary reduction contributions under section 125 of the Code. Because section 9005 of the Affordable Care Act limits the annual amount that may be contributed by an employee to a health FSA to $2,500 (indexed for inflation), we believe that a health FSA is not major medical coverage under this final rule, and therefore is excluded from reinsurance contributions.

(f) *Employee assistance plans, disease management programs, and wellness programs:* Employee assistance plans, disease management programs, and wellness programs typically provide ancillary benefits to employees that in many cases do not constitute major medical coverage. Employers, plan sponsors, and health insurance issuers have flexibility in designing these programs to provide services that are additional benefits to employees, participants, and beneficiaries. If the program (whether self-insured or insured) does not provide major medical coverage, we proposed to exclude it from reinsurance contributions and we are finalizing that provision in the final rule. We also note that employers that provide one or more of these ancillary benefits often sponsor major medical plans which would be subject to reinsurance contributions, absent other excluding circumstances.

(g) *Stop-loss and indemnity reinsurance policies:* For purposes of reinsurance, we proposed to exclude stop-loss insurance and indemnity reinsurance because they do not constitute major medical coverage for the applicable covered lives. Generally, a stop-loss policy is an insurance policy that protects against health insurance claims that are catastrophic or unpredictable in nature and provides coverage to self-insured group health plans once a certain level of risk has been absorbed by the plan. Stop-loss insurance allows an employer to self-insure for a set amount of claims costs, with the stop-loss insurance covering all or most of the remainder of the claims costs that exceed the set amount. An indemnity reinsurance policy is an agreement between two or more insurance companies under which the reinsuring company agrees to accept and to indemnify the issuing company for all or part of the risk of loss under policies specified in the agreement, and the issuing company retains its liability to, and its contractual relationship with, the applicable lives covered. We believe these types of policies were not intended to be subject to the reinsurance program. No inference is intended as to whether stop-loss or reinsurance policies constitute health insurance policies for purposes other than reinsurance contributions.

(h) *Military Health Benefits:* TRICARE is the component of the Military Health System that furnishes health care insurance to active duty and retired personnel of the uniformed services

[18] See the Fees on Health Insurance Policies and Self-Insured Plans for the Patient-Centered Outcomes Research Trust final rule (the PCORTF Rule) published on December 6, 2012 (77 FR 72721).

(and covered dependents) through private issuers under contract. Although TRICARE coverage is provided by private issuers, it is not part of a commercial book of business because the relationship between the uniformed services and service members differs from the traditional employer-employee relationship in certain important respects. For example, service members may not resign from duty during a period of obligated service, may not form unions, and may be subject to discipline for unexcused absences from duty.

In addition to TRICARE, the Military Health System also includes health care services that doctors, dentists, and nurses provide to uniformed services members on military bases and ships. The Veterans Health Administration within the U.S. Department of Veterans Affairs provides health care to qualifying veterans of the uniformed services at its outpatient clinics, hospitals, medical centers, and nursing homes. Because we do not consider these programs to be part of a commercial book of business, such military health programs are excluded from reinsurance contributions.

(i) *Tribal coverage:* Section 153.400(a)(2)(xi) of the proposed rule excluded plans or coverage (whether fully insured or self-insured) offered by a Tribe to Tribal members and their spouses and dependents (and other persons of Indian descent closely affiliated with the Tribe) in their capacity as Tribal members (and not in their capacity as current or former employees of the Tribe or their dependents). Similarly, we proposed that coverage provided to Tribal members through programs operated under the authority of the Indian Health Service (IHS), Tribes or Tribal organizations, or Urban Indian organizations, as defined in section 4 of the Indian Health Care Improvement Act would be excluded from reinsurance contributions because it is not part of a commercial book of business. We note, however, that a plan or coverage offered by a Tribe to its employees (or retirees or dependents) on account of a current or former employment relationship would be required to make reinsurance contributions.

Comment: Some commenters asked that self-insured Tribal plans that cover Tribal employees be excluded from reinsurance contributions, in a manner similar to Tribal plans that cover Tribal members based on their status as Tribal members.

Response: Similar to Federal and State-based employment coverage, these Tribal plans are based on employment relationships. We do not have the authority to make this exclusion.

We received additional comments which requested exceptions for other types of entities.

Comment: Several commenters requested that plans or coverage provided by a voluntary employee beneficiary association (VEBA) established and maintained under the terms of a class action or bankruptcy settlement ordered by a court (court-ordered VEBA) be excluded from reinsurance contributions. A court-ordered VEBA provides retiree medical benefits to former employees of certain companies. The court order specifies the funding and the eligible individuals, and the former employers have no ongoing financial or administrative responsibility. A significant percentage of existing court-ordered VEBAs are not well funded.

Response: We are unable to categorically exclude court-ordered VEBAs. We note, however, that many VEBAs may be excluded from reinsurance contributions because they do not provide major medical coverage.

Comment: Some commenters requested that certain jointly administered Taft-Hartley plans that provide health coverage to collectively bargained employees be excluded from reinsurance contributions. Generally, many of these plans are self-insured and self-administered, and include multiemployer plans within the meaning of section 3(37) of ERISA.

Response: While we recognize the unique nature of these plans, and their important role in providing coverage to collectively bargained employees and covered dependents, we do not have authority under the statute to exclude them from reinsurance contributions. As clarified in the Premium Stabilization Rule and in this final rule, we do not interpret the application of section 1341 of the Affordable Care Act to be limited to issuers and TPAs on behalf of group health plans. We view the plans' coverage as employment-based, and as a result subject to reinsurance contributions (unless another exclusion applies).

Comment: Several commenters asked for clarification as to whether individuals with group health coverage that elect Consolidated Omnibus Budget Reconciliation Act (COBRA) continuation coverage or similar continuation coverage under State law are covered lives for reinsurance purposes.

Response: Our view is that COBRA or other continuation coverage is a form of employment-based group health coverage paid for by the former employee. Therefore, to the extent the COBRA coverage qualifies as major medical coverage (and no other exception applies), it is subject to reinsurance contributions.

Comment: A few commenters stated that employer-provided coverage for part-time employees should be excluded from reinsurance contributions.

Response: Unless the coverage for part-time employees is self-insured and is not major medical coverage, or is not part of an issuer's commercial book of business, it is subject to reinsurance contributions (so long as no other exception applies).

3. National Contribution Rate

a. 2014 Rate

As specified in § 153.220(c) of the Premium Stabilization Rule, HHS plans to publish in the annual HHS notice of benefit and payment parameters the national per capita reinsurance contribution rate for the upcoming benefit year. Section 1341(b)(3)(B)(iii) of the Affordable Care Act specifies the total contribution amounts to be collected from contributing entities (reinsurance pool) as $10 billion for 2014, $6 billion for 2015, and $4 billion for 2016, and sections 1341(b)(3)(B)(iv) and 1341(b)(4) of the Affordable Care Act direct the collection of funds for contribution to the U.S. Treasury in the amounts of $2 billion for 2014, $2 billion for 2015, and $1 billion for 2016. We sought comments on whether deferring the collection of the $2 billion in funds payable to the U.S. Treasury for 2014 until 2016 would be consistent with the statutory requirements described above, and whether there are other steps that could be taken to reduce the burden of these collections on contributing entities. Finally, section 1341(b)(3)(B)(ii) of the Affordable Care Act allows for the collection of additional amounts for administrative expenses. Taken together, these three components make up the total dollar amount to be collected from contributing entities for each of the three years of the reinsurance program under the national per capita contribution rate.

Each year, the national per capita contribution rate will be calculated by dividing the sum of the three amounts (the national reinsurance pool, the U.S. Treasury contribution, and administrative costs) by the estimated number of enrollees in plans that must make reinsurance contributions. As an illustration, under the Affordable Care Act, the 2014 national reinsurance pool is $10 billion, and the contribution to

the U.S. Treasury is $2 billion. The amount to be collected for administrative expenses for benefit year 2014 is $20.3 million (or 0.2 percent of the $10 billion dispersed), as discussed in greater detail below. The HHS estimate of the number of enrollees in plans that must make reinsurance contributions that total the $12.02 billion described above yields an annual per capita contribution rate of $63.00 in benefit year 2014 or $5.25 per month.

Section 153.220(c) of the proposed rule (previously designated as § 153.220(e) in the Premium Stabilization Rule) stated that HHS plans to set in the annual HHS notice of benefit and payment parameters for the applicable benefit year the proportion of contributions collected under the national contribution rate to be allocated to reinsurance payments, payments to the U.S. Treasury, and administrative expenses. In Table 20, we specify these proportions (or amounts, as applicable):

TABLE 20—PROPORTION OF CONTRIBUTIONS COLLECTED UNDER THE NATIONAL CONTRIBUTION RATE FOR REINSURANCE PAYMENTS, PAYMENTS TO THE U.S. TREASURY AND ADMINISTRATIVE EXPENSES

Proportion or amount for:	If total contribution collections under the national contribution rate are less than or equal to $12.02 billion	If total contribution collections under the national contribution rate are more than $12.02 billion
Reinsurance payments	83.2 percent ($10 billion/$12.02 billion)	The difference between total national collections and those contributions allocated to the U.S. Treasury and administrative expenses.
Payments to the U.S. Treasury	16.6 percent ($2 billion/$12.02 billion)	$2 billion.
Administrative expenses	0.2 percent ($20.3 million/$12.02 billion)	$20.3 million.

In light of the comments received, we are finalizing these provisions as proposed.

Comment: Many commenters stated that a national contribution rate would penalize States with lower medical costs, and require those States to subsidize other States with higher medical costs. Some commenters asked that HHS vary the contribution rate using an index of health care costs by State. Conversely, many commenters supported a national per capita contribution rate. One commenter asked that the national contribution rate be calculated based on a percentage of premium and not on a per capita basis.

Response: As stated in the Premium Stabilization Rule (77 FR 17227), we are using a national, per capita contribution rate because it is a simpler approach that minimizes the administrative burden of collections. In addition, varying the contribution rate using an index of health care costs would not capture a State's reinsurance needs, which will also vary based upon the relative sizes of the State's individual, group, self-insured markets, and the uninsured.

Comment: Several commenters expressed concern about the annual per capita national contribution rate of $63.00 for benefit year 2014, and suggested lowering the rate. Many commenters were concerned with the expense of the reinsurance contribution for employees.

Response: Section 1341 of the Affordable Care Act states that the total contribution amounts to be collected from contributing entities for 2014 is $12 billion plus administrative expenses. We estimate that the $63 annual ($5.25 monthly) per capita contribution rate for benefit year 2014 will lead to collections in the statutory amount (plus administrative expenses) which we have concluded we have no regulatory authority to change.

Comment: One commenter expressed concern that self-insured group health plans are excluded from receiving reinsurance payments and do not benefit proportionally or directly from their reinsurance contribution. As such, this commenter suggested that HHS prorate the contribution rate for self-insured group health plans, by collecting less than the $63 annual per capita national contribution rate from those plans.

Response: Section 1341 of the Affordable Care Act directs health insurance issuers and self-insured group health plans to make reinsurance contributions. HHS has set forth a national per capita contribution rate for the 2014 benefit year which applies to all contributing entities, including self-insured group health plans.

Comment: Several commenters asked HHS to defer the collection of the $2 billion payable to the U.S. Treasury in 2014 until 2016.

Response: We considered the commenters' statutory interpretations for how such a deferral may be permissible under section 1341 of the Affordable Care Act and would support such a deferral, but concluded that we have no statutory authority to defer the collection.

Comment: Several commenters asked HHS to eliminate the $20.3 million collection for administrative expenses. One commenter stated that HHS has no authority to collect administrative expenses to pay for HHS operating reinsurance on behalf of a State.

Response: We interpret section 1341(b)(3)(B)(ii) of the Affordable Care Act to authorize the collection of additional amounts for administrative expenses, including for HHS when HHS operates reinsurance on behalf of a State. We agree with the commenters on the need to keep these administrative expenses at a minimum, and intend to operate the program efficiently. We note that our estimate of administrative expenses—$20.3 million—represents approximately 0.2 percent of the reinsurance amounts to be collected for 2014, and the costs of Federal employees are not included in the national contribution rate.

Comment: Several commenters asked for clarification regarding whether an employer may pass the cost of the reinsurance contribution to its enrollees in self-insured group health plans.

Response: This final rule does not address how an employer would meet the reinsurance contribution requirements.

Comment: One commenter asked how the national contribution rate will affect premiums or the affordability of coverage once implemented.

Response: As set forth in the regulatory impact analysis to this final rule, HHS estimates that reinsurance payments to issuers will reduce premiums in the individual market by between 10 to 15 percent. This is an HHS estimate for the 2014 benefit year, based in part on a 2009 analysis of health insurance premiums by the Congressional Budget Office.

Comment: Several commenters asked HHS to explain the methodology used to develop the national contribution rate and the assumptions behind the enrollment estimates that were used to

calculate the national contribution rate for 2014.

Response: As described in the proposed rule, HHS developed the Affordable Care Act Health Insurance Model (ACAHIM), which estimates market enrollment in a manner that incorporates the effects of State and Federal policy choices and accounts for the behavior of individuals and employers. We used the ACAHIM, which was developed with reference to existing models such as those of the Congressional Budget Office and the Office of the Actuary, to characterize medical expenditures and enrollment choices across the 2014 marketplace. The ACAHIM is made up of integrated modules which predict the number and characteristics of market entrants and medical spending. The outputs of the ACAHIM, especially the estimated enrollment and expenditure distributions, were used to analyze estimated enrollment in the 2014 marketplace.

The market enrollment module of the ACAHIM predicts coverage status of individuals in 2014, incorporating the effects of State and Federal policy choices and accounting for the behavior of individuals and employers. Using recent Current Population Survey data with appropriate population adjustments, the ACAHIM assigns individuals to a single health insurance market as their baseline (pre-Affordable Care Act) insurance status. The module estimates transitions from coverage status in the baseline to individuals' projected status in 2014, taking into account factors such as Medicaid eligibility, eligibility for advance payments of the premium tax credit and cost-sharing reductions under the Exchange, and current take-up rates of insurance.

Comment: Several commenters sought clarification on whether the reinsurance contributions may be charged back to an ERISA plan as a reasonable plan expense. Several commenters asked whether IRS had indicated that the reinsurance contribution is tax-deductible as an ordinary and necessary business expenses. Several commenters also asked HHS to clarify that the contribution amount will be considered a ''plan cost'' for all purposes.

Response: The Department of Labor advised HHS upon its review of this final rule that paying reinsurance contributions would constitute a permissible expense of the plan for purposes of Title I of the ERISA because the payment is required by the plan under the Affordable Care Act (*see,* 77 FR 73198, fn 56). Questions seeking clarification regarding particular situations should be directed to the Department of Labor. *See generally* Advisory Opinion 2001–01A to Mr. Carl Stoney, Jr., available at *www.dol.gov/ebsa* (discussing settlor versus plan expenses). For a discussion regarding the tax status of reinsurance contributions pursuant to the Affordable Care Act, see the FAQ issued by the IRS (*http://www.irs.gov/uac/Newsroom/ACA-Section-1341-Transitional-Reinsurance-Program-FAQs*).

b. Federal Administrative Fees

In the proposed rule, we estimated the Federal administrative expenses of operating reinsurance for the 2014 benefit year to be approximately $20.3 million, or 0.2 percent of the $10 billion in reinsurance funds to be distributed for the 2014 benefit year. This figure reflects the Federal government's significant economies of scale in operating the program, and results in a national per capita contribution rate of $0.11 annually for HHS administrative expenses.

In the proposed rule, we set forth the process for apportioning the annual per capita amount of $0.11 of administrative expenses as follows: $0.055 of the total amount collected per capita would be allocated to administrative expenses incurred in the collection of contributions from health insurance issuers and self-insured group health plans; and $0.055 of the total amount collected per capita would be allocated to administrative expenses incurred for activities supporting the administration of payments to issuers of reinsurance-eligible plans. We proposed that if a State operates reinsurance, HHS would retain $0.055 to offset the costs of contributions collection, and would allocate $0.055 towards administrative expenses for reinsurance payments. The total amounts allocated towards administrative expenses for reinsurance payments would be distributed to States operating reinsurance (or retained by HHS where HHS is operating reinsurance) in proportion to the State-by-State total requests for reinsurance payments made under the uniform payment parameters. We are finalizing these provisions as proposed.

Comment: Several commenters sought clarification on how administrative expenses will be distributed to States operating reinsurance.

Response: The 2014 allocation for Federal administrative expenses for operating reinsurance totals $20.3 million. HHS will keep 50 percent to cover the administrative expense of collecting reinsurance contributions from health insurance issuers and self-insured group health plans. The 50 percent allocated for reinsurance payment activities will be distributed in proportion to the State-by-State total requests for reinsurance payments (by total dollars) made under the uniform payment parameters. States operating reinsurance will receive that allocation; HHS will retain the allocation for States not operating reinsurance.

Comment: Several commenters sought clarification on the methodology used to develop the Federal administrative expenses of implementing the reinsurance program in 2014.

Response: We determined HHS's total costs for administering reinsurance on behalf of States by examining HHS's contract costs of operating reinsurance. These contracts cover collections, payments, account management, data collection, program integrity, operational and fraud analytics, stakeholder training, and operational support. We did not include the cost of Federal personnel. We divided HHS's projected total costs for administering reinsurance on behalf of States by the expected enrollment in health insurance plans and self-insured group health plans. We anticipate that the total cost for HHS to operate reinsurance on behalf of States for the 2014 benefit year will be $20.3 million, or $0.11 per capita per year.

Comment: One commenter expressed concern that HHS under-estimated the cost to a State of administering reinsurance.

Response: The cost estimates in the proposed rule are estimates of HHS's costs of administering the program. HHS may benefit from economies of scale not available to the States. We understand that States operating reinsurance may need to collect additional funds for administrative expenses.

4. Calculation and Collection of Reinsurance Contributions

a. Calculation of Reinsurance Contribution Amount and Timeframe for Collections

HHS intends to administer the reinsurance program in a manner that minimizes the administrative burden on health insurance issuers and self-insured group health plans, while ensuring that contributions are calculated accurately. Thus, we proposed in § 153.400(a) and § 153.240(b)(1), respectively, to collect and pay out reinsurance funds annually to minimize the costs of administering the reinsurance program and the burden on contributing entities.

In the Premium Stabilization Rule, we stated that we would collect reinsurance contributions through a per capita

assessment on contributing entities. To clarify how this assessment is made, we proposed in § 153.405 that the reinsurance contribution of a contributing entity be calculated by multiplying the average number of covered lives of reinsurance contribution enrollees during the benefit year for all of the contributing entity's plans and coverage that must pay reinsurance contributions, by the national contribution rate for the applicable benefit year.

In § 153.405(b), we proposed that a contributing entity must submit to HHS an annual enrollment count of the average number of covered lives of reinsurance contribution enrollees no later than November 15 of benefit year 2014, 2015, and 2016, as applicable. The count must be determined as specified in proposed § 153.405(d), (e), (f), or (g), as applicable. We proposed to amend § 153.400(a) so that each contributing entity would make annual reinsurance contributions at the national contribution rate, and under any additional applicable State supplemental contribution rate, if a State elects to collect additional contributions for administrative expenses or supplemental reinsurance payments under § 153.220(d). We believe that this annual collection schedule will ensure a more accurate count of a contributing entity's average covered lives, and will avoid the need for any initial estimates and subsequent reconciliation to account for fluctuations in enrollment during the course of the benefit year.

In § 153.405(c)(1), we proposed that within 15 days of submission of the annual enrollment count or by December 15, whichever is later, HHS would notify each contributing entity of the reinsurance contribution amounts to be paid based on the submitted annual enrollment count. We specified in § 153.405(c)(2) that a contributing entity remit contributions to HHS within 30 days after the date of the notification of contributions due for the applicable benefit year. The amount to be paid by the contributing entity would be based upon the notification received under § 153.405(c)(1).

We are finalizing these provisions as proposed, with technical corrections to § 153.400, where we clarify that each contributing entity must make reinsurance contributions annually at the national contribution rate; to § 153.405(c), where we clarify that HHS will notify a contributing entity of reinsurance contributions amounts to be paid for a benefit year by the later of December 15 or 30 days after the submission of the annual enrollment count; and § 153.405(a)(1), § 153.405(b) and § 153.405(d), where we delete ''average'' to clarify that reinsurance contributions are calculated by multiplying the number of covered lives of reinsurance contribution enrollees during the applicable benefit year for all contributing entities by the national contribution rate, pursuant to § 153.405(a).

Comment: Several commenters asked HHS to collect contributions after all reinsurance payment requests are submitted and aggregated, emphasizing that the reinsurance contributions should equal the 2014 requests for reinsurance payments.

Response: Under the Affordable Care Act, the total contribution amounts to be collected from contributing entities for reinsurance payments and payments to the U.S. Treasury for 2014 are $12 billion. We estimate that the $63.00 ($5.25 monthly) annual per capita contribution rate for benefit year 2014 will lead to collections in that amount, including the $20.3 million in administrative expenses. We recognize the possibility that reinsurance payment requests for 2014 may be less than contributions collected for 2014, but section 1341(b)(3)(B)(4)(A) of the Affordable Care Act provides that unused funds after making the 2014 reinsurance payments may be used to stabilize premiums for the three years of the reinsurance program. As set forth in § 153.235(b), any unused funds will be used for reinsurance payments under the uniform reinsurance payment parameters for subsequent benefit years.

Comment: One comment received sought clarification on whether contributing entities are required to make reinsurance contributions once per year.

Response: As set forth in § 153.400(a), a contributing entity makes reinsurance contributions at the national contribution rate annually.

Comment: Several commenters requested that HHS revise the date by which a contributing entity must submit the annual enrollment count date to the end of the benefit year, so that issuers may submit enrollment counts on 12 months of data.

Response: Due to operational time constraints surrounding the collection of reinsurance contributions, HHS must receive annual enrollment counts by November 15 of the applicable benefit year in order to invoice and collect contributions in time to aggregate payment requests and make payments. We do not believe the earlier submission will significantly impair the accuracy of the enrollment count.

Counting Methods for Health Insurance Issuers: In § 153.405(d), we proposed a number of methods that a health insurance issuer may use to determine the average number of covered lives of reinsurance contribution enrollees under a health insurance plan for a benefit year for purposes of the annual enrollment count. These methods promote administrative efficiencies by building on the methods permitted for purposes of the fee to fund the Patient-Centered Outcomes Research Trust Fund (77 FR 72721), modified for applicability to the transitional reinsurance program so that a health insurance issuer may determine an annual enrollment count during the fourth quarter of the benefit year. Thus, under each of these methods, the number of covered lives will be determined based on the first nine months of the benefit year.

(1) *Actual Count Method:* Under the PCORTF Rule, an issuer may use the ''actual count method'' to determine the number of lives covered under the plan for the plan year by calculating the sum of the lives covered for each day of the plan year and dividing that sum by the number of days in the plan year. We proposed that, for reinsurance contributions purposes, a health insurance issuer would add the total number of lives covered for each day of the first nine months of the benefit year and divide that total by the number of days in those nine months of the benefit year.

(2) *Snapshot Count Method:* Under the PCORTF Rule, a health insurance issuer may use the ''snapshot count method'' generally by adding the total number of lives covered on a certain date during the same corresponding month in each quarter, or an equal number of dates for each quarter, and dividing the total by the number of dates on which a count was made. For reinsurance contributions purposes, an issuer would add the totals of lives covered on a date (or more dates, if an equal number of dates are used for each quarter) during the same corresponding month in each of the first three quarters of the benefit year (provided that the dates used for the second and third quarters must be within the same week of the quarter as the date used for the first quarter), and divide that total by the number of dates on which a count was made. For this purpose, the same months must be used for each quarter (for example, January, April and July).

(3) *Member Months Method or State Form Method:* Under the PCORTF Rule, a health insurance issuer may use the ''Member Months Method'' or ''State Form Method'' by using data from the

NAIC Supplemental Health Exhibit or similar data from other State forms. However, data from these forms may be out of date at the time of the annual enrollment count submission, and we believe that it is important that health insurance issuers achieve an accurate count of covered lives, particularly for individual market plans. We expect that the individual market will be subject to large increases in enrollment between 2014 and 2016. Therefore, we proposed a modified counting method based upon the ratio of covered lives per policy in the NAIC or State form. Specifically, we proposed that health insurance issuers using this method multiply the average number of policies for the first nine months of the applicable benefit year by the ratio of covered lives per policy calculated from the NAIC Supplemental Health Care Exhibit (or from a form filed with the issuer's State of domicile for the most recent time period). Issuers would count the number of policies in the first nine months of the applicable benefit year by adding the total number of policies on one date in each quarter, or an equal number of dates for each quarter (or all dates for each quarter), and dividing the total by the number of dates on which a count was made.[19]

Counting Methods for Self-Insured Group Health Plans: In § 153.405(e), we proposed a number of methods that a self-insured group health plan may use to determine the average number of covered lives for purposes of the annual enrollment count. These methods mirror the methods permitted for sponsors of self-insured group health plans under the PCORTF Rule, modified slightly for timing with the reinsurance program, so that enrollment counts may be obtained on a more current basis.

(1) *Actual Count Method or Snapshot Count Method:* We proposed that self-insured plans, like health insurance issuers, may use the actual count method or snapshot count method as described above.

(2) *Snapshot Factor Method:* Under the PCORTF Rule, a plan sponsor generally may use the ''snapshot factor method'' by adding the total number of lives covered on any date (or more dates if an equal number of dates are used for each quarter) during the same corresponding month in each quarter, and dividing that total by the number of dates on which a count was made, except that the number of lives covered on a date is calculated by adding the number of participants with self-only coverage on the date to the product of the number of participants with coverage other than self-only coverage on the date and a factor of 2.35.[20] For this purpose, the same months must be used for each quarter (for example, January, April, July, and October). For reinsurance contributions purposes, a self-insured group health plan would use this PCORTF counting method over the first three quarters of the benefit year, provided that the corresponding dates for the second and third quarters of the benefit year must be within the same week of the quarter as the date selected for the first quarter.

(3) *Form 5500 Method:* Under the PCORTF Rule, a plan sponsor may use the ''Annual Return/Report of Employee Benefit Plan'' filed with the Department of Labor (Form 5500) by using data from the Form 5500 for the last applicable plan year. We proposed that, for purposes of reinsurance contributions, a self-insured group health plan may also rely upon such data, even though the data may reflect enrollment in a previous benefit year. Our modeling of the 2014 health insurance marketplace, discussed in section III.C.6. of this final rule, suggests that enrollment in self-insured group health plans is less likely to fluctuate than enrollment in the individual market. Thus, we proposed that a self-insured group health plan may calculate the number of lives covered for a plan that offers only self-only coverage by adding the total participants covered at the beginning and end of the benefit year, as reported on the Form 5500, and dividing by two. Additionally, a self-insured group plan that offers self-only coverage and coverage other than self-only coverage may calculate the number of lives covered by adding the total participants covered at the beginning and the end of the benefit year, as reported on the Form 5500.

Counting Methods for Plans With Self-insured and Insured Options: An employer may sponsor a group health plan that offers one or more coverage options that are self-insured and one or more other coverage options that are insured. In § 153.405(f), we proposed that to determine the number of covered lives of reinsurance contribution enrollees under a group health plan with both self-insured and insured options for a benefit year, a plan sponsor must use one of the methods specified in either § 153.405(d)(1) or § 153.405(d)(2)—the ''actual count'' method or ''snapshot count'' for health insurance issuers.

Aggregation of self-insured group health plans and health insurance plans: We proposed in § 153.405(g)(1) that if a plan sponsor maintains two or more group health plans or health insurance plans that collectively provide major medical coverage for the same covered lives, which we refer to as ''multiple plans'' for purposes of the reinsurance program, then these multiple plans must be treated as a single self-insured group health plan for purposes of calculating any reinsurance contribution amount due under paragraph (c) of this section. This approach would prevent the double counting of a covered life for major medical coverage offered across multiple plans, and prohibit plan sponsors that provide such major medical coverage from splitting the coverage into separate arrangements to avoid reinsurance contributions on the grounds that it does not offer major medical coverage.

For purposes of § 153.405(g)(1), the plan sponsor is responsible for paying reinsurance contributions. We proposed to define ''plan sponsor'' in proposed § 153.405(g)(2) based on the definition of the term in the PCORTF Rule as:

(A) The employer, in the case of a plan established or maintained by a single employer;

(B) The employee organization, in the case of a plan established or maintained by an employee organization;

(C) The joint board of trustees, in the case of a multiemployer plan (as defined in section 414(f) of the Code);

(D) The committee, in the case of a multiple employer welfare arrangement;

(E) The cooperative or association that establishes or maintains a plan established or maintained by a rural electric cooperative or rural cooperative association (as such terms are defined in section 3(40)(B) of ERISA);

(F) The trustee, in the case of a plan established or maintained by a voluntary employees' beneficiary association (meaning that the association is not merely serving as a funding vehicle for a plan that is established or maintained by an employer or other person);

[19] For example, if a health insurance issuer indicated on the NAIC form for the most recent time period that it had 2,000 policies covering 4,500 covered lives, it would apply the ratio of 4,500 divided by 2,000, equaling 2.25 to the number of policies it had over the first three quarters of the applicable benefit year. If the issuer had an average of 2,300 policies in the three quarters of the applicable benefit year, it would report 2.25 multiplied by 2,300 as the number of covered lives for the purposes of reinsurance contributions.

[20] The preamble to the proposed PCORTF Rule published on April 17, 2012 (77 FR 22691) explains that ''the 2.35 dependency factor reflects that all participants with coverage other than self-only have coverage for themselves and some number of dependents. The Treasury Department and the IRS developed the factor, and other similar factors used in the regulations, in consultation with Treasury Department economists and in consultation with plan sponsors regarding the procedures they currently use for estimating the number of covered individuals.''

(G) In the case of a plan, the plan sponsor of which is not described in (A) through (F) above, the person identified or designated by the terms of the document under which the plan is operated as the plan sponsor, provided that designation is made and consented to by no later than the date by which the count of covered lives for that benefit year is required to be provided. After that date, the designation for that benefit year may not be changed or revoked, and a person may be designated as the plan sponsor only if the person is one of the persons maintaining the plan (for example, one of the employers that is maintaining the plan with one or more other employers); or

(H) In the case of a plan the sponsor of which is not described in (A) through (F) above, and for which no identification or designation of a plan sponsor has been made under (G), each employer or employee organization that maintains the plan (with respect to employees of that employer or employee organization), and each board of trustees, cooperative or association that maintains the plan.

Exceptions: We proposed two exceptions to this aggregation rule, in § 153.405(g)(3). A plan sponsor is not required to include as part of a single group health plan as determined under paragraph § 153.405(g)(1): (a) any group health plan that consists solely of excepted benefits within the meaning of section 2791(c) of the PHS Act (such as stand-alone dental or vision benefits); or (b) benefits related to prescription drug coverage. These exceptions were designed to reduce the burden on plan sponsors who have chosen to structure their coverage in that manner.

Multiple Plans: In § 153.405(g)(4), we proposed the counting requirements for multiple plans in which at least one of the plans is an insured plan (§ 153.405(g)(4)(i)), and multiple plans not including an insured plan (§ 153.405(g)(4)(ii)). First, we anticipate that a plan sponsor would generate or obtain a list of the participants in each plan and then analyze the lists to identify those participants that have major medical coverage across all the plans collectively. To calculate the average number of covered lives of reinsurance contribution enrollees across multiple plans, we proposed that a plan sponsor must use one of the methods applicable to health insurance plans or self-insured group health plans under § 153.405(d) and § 153.405(e), respectively, applied across the multiple plans as a whole. We also proposed to require reporting to HHS or the applicable reinsurance entity concerning multiple plans, as discussed in § 153.405(g)(4). Additionally, it is important to note that the reinsurance program will operate on a benefit year basis, which is defined in § 153.20 of the proposed rule (by reference to § 155.20) as the calendar year. Therefore, the applicable counting methods, whether or not a particular plan operates on a calendar year basis, would not vary.

Multiple Group Health Plans Including an Insured Plan: When one or more of the multiple group health plans is an insured plan, we proposed that the actual count method for health insurance issuers in § 153.405(d)(1) or the snapshot count method for health insurance issuers in § 153.405(d)(2) must be used. We proposed to prohibit the use of the ''Member Months Method'' or ''State Form Method'' to count covered lives across multiple insured plans because those methods would not easily permit aggregate counting, since the identities of the covered lives are not available on the applicable forms. We proposed that the plan sponsor must determine and report, in a timeframe and manner established by HHS, to HHS (or the applicable reinsurance entity, if the multiple plans all consist solely of health insurance plans and the applicable reinsurance entity of a State is collecting contributions from health insurance issuers in such State): (1) The average number of covered lives calculated; (2) the counting method used; and (3) the names of the multiple plans being treated as a single group health plan as determined by the plan sponsor and reported to HHS.

Multiple Self-Insured Group Health Plans Not Including an Insured Plan: We described the counting provisions applicable to multiple self-insured group health plans (that is, when none of the plans is an insured plan) in proposed paragraph § 153.405(g)(4)(ii). There are four counting methods available for self-insured plans which are set forth in § 153.405(e)(1) through § 153.405(e)(4). Section 153.405(e)(1) permits a plan sponsor to use the actual count method under § 153.405(d)(1) or the snapshot count method under § 153.405(d)(2) that are also available for insured plans. Paragraph (e)(2) permits an additional method (the snapshot factor method) for self-insured plans. We proposed not to permit a plan sponsor to use the fourth method, the ''Form 5500 Method'' as described in proposed § 153.405(e)(3) to count covered lives across multiple self-insured plans because that method would not easily permit aggregate counting, since the identities of the covered lives are not available on that form. Thus, we proposed three possible methods for multiple self-insured plans under paragraph § 153.405(g)(4)(ii). We further proposed that the plan sponsor must report to HHS, in a timeframe and manner established by HHS: (1) The average number of covered lives calculated; (2) the counting method used; and (3) the names of the multiple plans being treated as a single group health plan as determined by the plan sponsor.

Consistency with PCORTF Rule Not Required: We proposed not to require consistency in counting methods between the count calculated under the PCORTF Rule and the count calculated for reinsurance purposes. In other words, we would allow a contributing entity to use, either the counting method corresponding to the method selected for the PCORTF Rule or a different counting method for reinsurance purposes. Because time periods and counting methods may differ, we would not require that a contributing entity submit consistent estimates of its covered lives in the return required in connection with the PCORTF Rule and the annual enrollment count required for reinsurance contributions (although these counts should be performed in accordance with the rules of the counting method chosen). However, when calculating the average number of covered lives across two or more plans under proposed paragraph (g) for purposes of reinsurance, the same counting method would be used across all of the multiple plans, because they would be treated as a single plan for counting purposes.

We are finalizing these provisions as proposed, with the following modifications: we updated the footnotes that referenced the proposed PCORTF Rule with the citation for the final POCRTF Rule; we made a number of technical adjustments to the aggregation rules set forth in § 153.405—we provided plan sponsors with the option to count any coverage options within a single group health plan separately if the coverage options are treated as offering major medical coverage, we provided plan sponsors with the option not to aggregate group health plans for purposes of counting covered lives if each group health plan is treated as offering major medical coverage, and we included HRAs, HSAs, and FSAs in the categories of group health plans that are excluded from the counting rules.

Comment: One commenter asked that HHS confirm that the count of covered lives for purposes of determining reinsurance contributions would be members enrolled in the first nine

months of each year throughout the reinsurance program (and will not be calculated on a twelve-month basis for the second and third years of the reinsurance program).

Response: We intend that the number of covered lives will be determined based on the first nine months of each of the 2014, 2015, and 2016 benefit years.

Comment: Some commenters asked HHS to clarify how the counting methods apply to plans that have a non-calendar plan year.

Response: The reinsurance program will operate on a calendar year basis. As set forth in § 153.405, a contributing entity will determine its enrollment count by counting the average number of covered lives of reinsurance contribution enrollees during the first nine months of the benefit year (that is, calendar year) for all of the contributing entity's plans and coverage that must pay reinsurance contributions.

Comment: Several commenters stated that when a TPA or ASO contractor is submitting reinsurance contributions on behalf of a self-insured group health plan, the TPA or ASO contractor should be permitted to count members consistent with the methodology they use for fully insured lives.

Response: Many of the counting methods available to fully insured plans are also available to self-insured plans. If a self-insured plan's TPA or ASO contractor is an issuer that can easily perform such a count, such a choice may be the most efficient. However, this final rule does not require one specific counting method, and provides a self-insured plan, which is responsible for reporting the enrollment count and ensuring the payment of the reinsurance contribution, with the flexibility to use the counting method that it chooses.

Comment: Several commenters generally appreciated the use of PCORTF counting methods. Some commenters suggested that HHS direct plan sponsors or issuers to count enrollment on the last day of each month and calculate membership based on an average across all months.

Response: In order to relieve the administrative burden of submitting the annual enrollment count, HHS has incorporated, with slight modifications for timing, the counting methods set forth in the PCORTF Rule. Allowing contributing entities to choose from a variety of counting methods gives contributing entities the flexibility to choose a counting method that works best for that plan or coverage.

Comment: Numerous commenters stated that it is unreasonable to believe that employers are unable to identify the States in which their employees reside or work. Several commenters supported HHS's proposal to eliminate the need for employers to allocate employees by State of residence.

Response: State-based allocation of enrollees in a contributing entity's plans or coverage is not necessary because reinsurance contributions will be collected by HHS and placed into a national pool from which reinsurance payments will be made in an efficient, fair, and accurate manner where they are needed most. We believe that this will be most effective in helping stabilize premiums nationally.

Comment: One commenter asked HHS to revise the snapshot counting methods so that issuers would be permitted to use the same date in the first month in each quarter for counting members, in addition to being able to use any date within the same week of the quarter.

Response: Under the ''snapshot count method,'' a health insurance issuer or self-insured group health plan would add the totals of covered lives on a date (or more dates if an equal number of dates are used for each quarter) during the same corresponding month in each of the first three quarters of the benefit year (provided that the dates used for the second and third quarters must fall within the same week of the quarter as the date used for the first quarter), and divide that total by the number of dates on which a count was made. For this purpose, the same months must be used for each quarter (for example, January, April and July). Under the ''snapshot factor method,'' a self-insured group health plan would use this PCORTF counting method over the first three quarters of the benefit year, provided that for this purpose, the corresponding dates for the second and third quarters of the benefit year must fall within the same week of the quarter as the date selected for the first quarter. We believe that those counting methods provide sufficient flexibility, and intend to keep these methods consistent with the PCORTF Rule.

Comment: One commenter asked that HHS permit contributing entities to submit enrollment counts and contributions electronically. One commenter encouraged HHS to permit contributing entities to submit reinsurance contributions electronically in a manner similar to that used for submissions of collections under the PCORTF Rule.

Response: HHS will provide details on the submission of enrollment counts and contributions in future guidance.

Comment: One commenter asked that HHS give contributing entities flexibility in correcting errors when making reinsurance contributions.

Response: Given the complexities related to the first year of the reinsurance program, HHS is aware that operational difficulties may arise. We intend to work closely with contributing entities in establishing the operational processes for the submission of enrollment counts and contributions.

Comment: One commenter suggested that HHS clarify that the enrollee counting methods exclude plan participants who do not have major medical coverage.

Response: As set forth in § 153.400(a)(1)(i), reinsurance contributions are not required for a plan or health insurance coverage that is not major medical coverage. Consequently, enrollees in those plans are not required to be included in a count of covered lives for purposes of reinsurance contributions unless required under § 153.405(f) or (g).

Comment: One commenter stated that in order to apply the enrollee counting rules accurately, an employer must be able to determine in what circumstances different health coverage options constitute a single group health plan. The commenter suggested that for the purposes of reinsurance, group health plans be identified by reference to the COBRA rules because they are widely used. Under the COBRA rules, group health arrangements maintained by the same employer generally are treated as a single group health plan unless the instruments governing the arrangements designate them as separate plans and the employer operates them as separate plans.

Response: Section 1301(b)(3) of the Affordable Care Act defines ''group health plan'' by reference to section 2791(a) of the Public Health Service Act, which states that a group health plan is an employee welfare benefit plan (as defined in section 3(1) of ERISA) to the extent that the plan provides medical care (as defined in section 2791(a)(2)) to employees or their dependents (as defined under the terms of the plan), directly or through insurance, reimbursement, or otherwise.

However, we note that the IRS has promulgated COBRA regulations for determining the number of group health plans an employer maintains. 26 CFR 54.4980B–2, QA 6 (2001) [21] states, in relevant part, that except as otherwise provided in the regulation, all health care benefits provided by a corporation, partnership or other entity or trade or

[21] See *http://www.gpo.gov/fdsys/pkg/CFR-2011-title26-vol17/pdf/CFR-2011-title26-vol17-sec54-4980B-2.pdf.*

business shall constitute one group health plan unless it is clear from the instruments governing the arrangement(s) that the benefits are being provided under separate plans, and the arrangement(s) are operated under such instruments as separate plans. The COBRA regulations include an anti-abuse rule which states that if a principal purpose of establishing separate plans is to evade any requirement of law, the separate plans will be considered a single plan to the extent necessary to prevent the evasion. We clarify that for purposes of counting covered lives for reinsurance contributions, an employer may count its group health plans in accordance with these regulations, subject to the anti-abuse rule.

Comment: One commenter suggested that HHS revise proposed § 153.405(f) to permit employers to disaggregate a group health plan that offers both self-insured and insured coverage options to different groups, and to permit an issuer with respect to one group health plan that contains multiple insured options written by more than one issuer to treat the insured options as separate group health plans for purposes of the counting rules. The commenter stated that § 153.405(f) as currently drafted is not consistent with current plan sponsor and issuer practices.

Response: We are amending § 153.405(f) to permit such disaggregation, so long as each coverage option is treated as major medical coverage, except if a coverage option consists solely of excepted benefits as defined by section 2791(c) of the PHS Act, only provides benefits related to prescription drugs, or is an HRA, HSA, or FSA. This amendment is designed to allow contributing entities flexibility in performing enrollment counts, while collecting reinsurance contributions for all enrollees with major medical coverage, without ''double-counting.''

Comment: One commenter suggested that the plan aggregation rules be permissive rather than mandatory, and that it should apply only to overlapping simultaneous coverage.

Response: We agree that the plan aggregation rules should only apply to overlapping, simultaneous coverage. For the reasons set forth in the prior response, we are amending § 153.405(f) and (g) to permit disaggregation, so long as each coverage option or separate group health plan is treated as major medical coverage, except if a coverage option or separate group health plan consists solely of excepted benefits as defined by section 2791(c) of the PHS Act, only provides benefits related to prescription drugs, or is a HRA, HSA, or FSA.

Comment: One commenter suggested that the plan aggregation rules set forth in § 153.405(g) should not apply to any plan or health insurance coverage that is excluded from making reinsurance contributions.

Response: We have clarified that the plan aggregation rules do not apply to a plan or health insurance coverage that consists solely of excepted benefits as defined by section 2791(c) of the PHS Act, only provides benefits related to prescription drugs, or is an HRA, HSA, or FSA. However, we decline to exempt other plans or coverage excluded from making reinsurance contributions from the aggregation rules because the aggregation rules are designed in part to ensure reinsurance contribution collections from arrangements involving multiple plans that collectively provide major medical coverage, even when each component plan does not. Thus, a plan providing only hospital benefits might have to be aggregated with a plan that provides medical coverage other than hospital benefits, even though the hospital benefit plan on its own would be excluded from making reinsurance contributions because it is not major medical coverage.

b. State Use of Contributions Attributed to Administrative Expenses

In the proposed rule, HHS provided guidance on three restrictions that we intend to propose on the use of reinsurance contributions for administrative expenses, to permit States operating the reinsurance program to accurately estimate the cost of administrative expenses. First, we intend to apply the prohibitions described in section 1311(d)(5)(B) of the Affordable Care Act to the reinsurance program which prohibit an Exchange from using funds intended for administrative and operational expenses of the Exchange for such purposes as staff retreats, promotional giveaways, and excessive executive compensation. Second, we intend to propose that reinsurance funds intended for administrative expenses may not be used for any expense not necessary to the operation or administration of the reinsurance program. Third, we intend to propose that an applicable reinsurance entity must allocate any shared, indirect, or overhead costs between reinsurance-related and other State expenses based on generally accepted accounting principles, consistently applied. We received no comments on this guidance. We intend to issue future rulemaking including these provisions.

5. Eligibility for Reinsurance Payments under the Health Insurance Market Reform Rules

We proposed to add § 153.234 to clarify that, under either the uniform reinsurance payment parameters or the State supplemental reinsurance payment parameters, a reinsurance-eligible plan's covered claims costs for an enrollee incurred prior to the application of 2014 market reform rules—§ 147.102 (fair health insurance premiums), § 147.104 (guaranteed availability of coverage, subject to the student health insurance provisions at § 147.145), § 147.106 (guaranteed renewability of coverage, subject to the student health insurance provisions at § 147.145), § 156.80 (single risk pool), and subpart B of part 156 (essential health benefits package)—would not count toward either the uniform or State supplemental attachment points, reinsurance caps, or coinsurance rates. In other words, those claims would not be eligible for reinsurance payments. We noted in the preamble of the proposed rule that, unlike plans subject to the 2014 market reform rules under the Affordable Care Act, plans not subject to these 2014 market reforms rules may use several mechanisms to avoid claims costs for newly insured individuals. (We also noted that student health plan eligibility would be subject to the modified guaranteed availability and guaranteed issue requirements only, to the extent that they apply, as set forth in § 147.145, and we would require that the student health plans meet those modified requirements to be eligible for reinsurance payments.) The market reform rules will be effective for the individual market for policy years beginning on or after January 1, 2014. As a result, policies that are issued in 2013 will be subject to these rules at the time of renewal in 2014, and therefore, become eligible for reinsurance payments at the time of renewal in 2014.

We believe that providing reinsurance payments only to those reinsurance-eligible plans that are subject to the 2014 market reform rules better reflects the reinsurance program's purpose of mitigating premium adjustments to account for risk from newly insured individuals. We also proposed that State-operated reinsurance programs similarly limit eligibility for reinsurance payments, although we recognize that this policy contrasts with the approach proposed for State-operated risk adjustment programs, under which States are permitted to choose to risk-adjust plans not subject to the 2014 market reform rules. Because some

States may have enacted State-specific rating and market reforms that they believe would justify the inclusion of these plans in risk adjustment before their renewal dates, permitting State flexibility on the applicability of risk adjustment to plans not subject to the 2014 market reform rules furthers the goals of the risk adjustment program. However, we believe that State flexibility for eligibility for reinsurance payments does not further the goal of the reinsurance program. Last, we proposed to operate the reinsurance program on a calendar year basis, which we believe to be most feasible from policy and administrative standpoints. For the reasons described in the proposed rule and considering the comments received, we are finalizing the provisions proposed in § 153.234.

Comment: Commenters generally supported the operation of the reinsurance program on a calendar year basis. Commenters also requested that HHS use a calendar year approach versus a plan year approach for administrative simplicity. A commenter also requested that HHS use the term ''calendar year'' instead of ''benefit year'' to avoid confusion among issuers.

Response: We use the term ''benefit year'' throughout this final rule instead of ''calendar year'' because, under § 155.20 of the Exchange Establishment Rule, ''benefit year'' is defined as a calendar year for which a health plan provides coverage for health benefits. For consistency, HHS will continue to use the term ''benefit year.''

6. Reinsurance Payment Parameters

As described in the Premium Stabilization Rule, reinsurance payments to eligible issuers would be made for a portion of an enrollee's claims costs paid by the issuer that exceeds an attachment point, subject to a coinsurance rate and a reinsurance cap. The coinsurance rate, attachment point, and reinsurance cap are the reinsurance ''payment parameters.'' We proposed uniform reinsurance payment parameters that would be applicable to the reinsurance program for each State, whether or not operated by a State. We believe that using uniform payment parameters will result in equitable access to the reinsurance funds across States and will further the goal of premium stabilization across all States by disbursing reinsurance contributions where they are most needed.

We noted in the proposed rule that the primary purpose of the transitional reinsurance program is to stabilize premiums by setting the reinsurance payment parameters to achieve the greatest impact on rate setting, and therefore, premiums, through reductions in plan risk, while complementing the current commercial reinsurance market. The reinsurance program is designed to protect against issuers' potential perceived need to raise premiums due to the implementation of the 2014 market reform rules, specifically, guaranteed availability. HHS expects that any potential new high-cost claims from newly insured individuals would be balanced out by low-cost claims from many newly insured individuals who enter the individual market as a result of the availability of premium tax credits, more affordable coverage, the minimum coverage provision, and greater transparency and competition in the market. To that end, the reinsurance program is designed to alleviate the concern of new high-cost claims from newly insured individuals.

We proposed that the 2014 uniform reinsurance payment parameters be established at: (a) An attachment point of $60,000, when reinsurance payments would begin, (b) a national reinsurance cap of $250,000, when the reinsurance program stops paying claims for a high-cost individual, and (c) a uniform coinsurance rate of 80 percent, which is the reimbursement percentage applied to the issuer's aggregated paid claims amounts on behalf of an enrollee while giving issuers an incentive to contain costs between the attachment point and reinsurance cap. These three proposed payment parameters would help offset high-cost enrollees. The parameters would not interfere with traditional commercial reinsurance, which typically has attachment points in the $250,000 range. We estimate that these uniform payment parameters will result in total requests for reinsurance payments of approximately $10 billion in the 2014 benefit year. We intend to continue to monitor individual market enrollment and claims patterns to appropriately disburse reinsurance payments throughout each of the benefit years during which the reinsurance program is in effect.

We are finalizing the proposed payment parameters, and the associated payment provisions proposed in § 153.230(a) through § 153.230(c), with a technical revision in § 153.230(a) changing ''non-grandfathered individual market plan'' to ''reinsurance-eligible plan'' and clarifying in § 153.230(c) that national reinsurance payments are calculated as the product of the national coinsurance rate multiplied by the health insurance issuer's claims costs for an individual enrollee's covered benefits that the health insurance issuer incurs in the applicable benefit year.

Comment: Several commenters supported the use of uniform payment parameters. Many commenters, however, suggested that States should be able to set their own payment parameters using State contributions to better target their local markets. Several commenters sought State flexibility and autonomy, with some commenters stating that they had spent substantial time and money preparing a State-operated program specific to the State. One commenter stated that uniform payment parameters and the national allocation of reinsurance payments will not ensure issuers of the aggregate funding available to pay claims in their respective markets until well after premium setting decisions for the next benefit year must be made.

Response: We believe that these uniform payment parameters best meet the reinsurance program's goals to promote premium stabilization and market stability in all States while providing plans incentives to continue effective management of enrollee costs. We aim to administer the transitional reinsurance program in an efficient, fair, and accurate manner so that reinsurance funds are allocated equitably and can maximize downward pressure on premiums. To maximize the program's impact on premiums, uniform reinsurance payment parameters would allow the allocation of reinsurance contributions where they are most needed, to reimburse issuers with high costs in the individual market in 2014, 2015 and 2016. This policy is consistent with the statutory goals of the reinsurance program—to stabilize premiums in the initial years of Exchange implementation and market reform. Additionally, as set forth in § 153.240(b)(2), a State, or HHS on behalf of the State, will provide each reinsurance-eligible plan the expected requests for reinsurance payments made under the national payment parameters and State supplemental parameters, if applicable. These reports can provide the information necessary for issuers to set rates in subsequent benefit years.

Comment: Several commenters requested more detail on the methodology used to calculate the uniform reinsurance payment parameters. One commenter requested that HHS detail the methodology used to determine the $60,000 attachment point. Another commenter requested that HHS raise the reinsurance cap to $500,000 to account for attachment points in commercial reinsurance higher than $250,000. Alternately, one commenter suggested that HHS use a first-dollar approach with no attachment point and a lower coinsurance rate to

better incentivize issuers to control costs from the beginning of an individual's care. Several commenters suggested that the proposed contribution rate is insufficient to fully fund the proposed uniform reinsurance payment parameters, and asked HHS to set the uniform payment parameters such that expected payments would be fully funded.

Response: As described in the proposed rule and earlier in this preamble, we used the ACAHIM, which estimates market enrollment incorporating the effects of State and Federal policy choices and accounting for the behavior of individuals and employers. These assumptions and projections led to our estimate of the 2014 individual and employer-sponsored insurance markets and expenditures, and permitted us to estimate uniform payment parameters that will lead to requests for reinsurance payments of approximately $10 billion.

Comment: One commenter asked HHS for guidance on how to account for quality improvement costs and attribute those to an individual, though they are not claims costs. Another commenter suggested that HHS use an alternate method for reinsurance payments, such as a fixed fee schedule or a percentage of Medicare reimbursement rates, instead of claims costs.

Response: HHS believes that using claims costs most appropriately reimburses issuers for costs related to higher risk individuals and will most effectively stabilize premiums.

Comment: One commenter suggested that HHS synchronize reinsurance payments with rules governing claims responsibility, such that if a patient changes coverage over the course of a single claim, the issuer paying the claim should be eligible for reinsurance payments.

Response: We believe that using the date of discharge for claims payments effectively synchronizes reinsurance payments with claims responsibility.

7. Uniform Adjustment to Reinsurance Payments

We proposed in § 153.230(d) that HHS would adjust reinsurance payments by a uniform, pro rata adjustment rate if HHS determines that the total requests for reinsurance payments under the reinsurance payment parameters will exceed the reinsurance contributions collected under the national contribution rate during a given benefit year. In the preamble to the proposed rule, we stated that the total amount of contributions considered for this purpose would include any contributions collected but unused under the national contribution rate during any previous benefit year. We are finalizing § 153.230(d) as proposed.

Comment: Several commenters supported the uniform adjustment to reinsurance payments in the event that total payment requests exceed reinsurance contributions. One commenter objected to the lower coinsurance rate that will effectively result from a uniform adjustment to payments, stating that this could lead to additional uncertainty for issuers.

Response: We developed the national contribution rate and uniform reinsurance payment parameters using enrollment and expenditure estimates for 2014, based on the ACAHIM. We recognize that requests for reinsurance payments may be greater than predicted, or that collections may be lower than predicted. However, we believe that a uniform adjustment to payments is the most equitable approach in these situations.

Comment: We received a comment seeking clarification on when, if necessary, the uniform adjustment to national reinsurance payments set forth in § 153.230(d) would occur, and how HHS will disburse reinsurance funds to States operating reinsurance, in order for the States to make reinsurance payments.

Response: As described in § 153.235, HHS plans to allocate and disburse to each State operating reinsurance (and will distribute directly to issuers if HHS is operating reinsurance on behalf of a State), reinsurance contributions collected from contributing entities under the national contribution rate for reinsurance payments. The disbursed funds would be based on the total requests for reinsurance payments made under the national reinsurance payment parameters by all States and submitted under § 153.410, net of any adjustment under § 153.230(d). Thus, prior to the disbursement, HHS would uniformly adjust reinsurance payments, if applicable, following the collection of contributions and after the receipt of all claims for reinsurance payments, which must be submitted by April 30 of the year following the applicable benefit year. Following that adjustment, HHS will make reinsurance payments in States where HHS is operating reinsurance on behalf of the State, and will distribute funds to States operating reinsurance.

8. Supplemental State Reinsurance Payment Parameters

In § 153.232(a), we proposed that a State establishing the reinsurance program may modify the uniform reinsurance payment parameters only by establishing State supplemental payment parameters that cover an issuer's claims costs beyond the uniform reinsurance payment parameters. We further proposed that reinsurance payments under these State supplemental payments parameters be made only with the additional funds that the State collects for reinsurance payments under § 153.220(d)(1)(ii) or State funds applied to the reinsurance program under § 153.220(d)(2) (proposed as (d)(3) in the proposed rule). We stated our belief that this approach would not prohibit States from collecting additional amounts for reinsurance payments as provided for under section 1341(b)(3)(B) of the Affordable Care Act, while allowing issuers in all States access to the reinsurance payments from the contributions collected under the national reinsurance contribution rate.

We proposed in § 153.232(a) that a State choosing to establish State supplemental reinsurance payment parameters must set those parameters by adjusting the uniform reinsurance payment parameters in one or more of the following ways: (1) Decreasing the national attachment point; (2) increasing the national reinsurance cap; or (3) increasing the national coinsurance rate. We also proposed that a State may not alter the uniform reinsurance payment parameters in a manner that could result in reduced reinsurance payments.

To provide issuers with greater certainty for premium rate setting purposes, we proposed that a State must ensure that any additional funds for reinsurance payments it collects under § 153.220(d)(1)(ii) or State funds under § 153.220(d)(2) (proposed as (d)(3) in the proposed rule), as applicable, are reasonably calculated to cover additional reinsurance payments projected to be made under the State's supplemental reinsurance payment parameters for a given benefit year. In § 153.232(b), we proposed that contributions collected under § 153.220(d)(1)(ii) or additional funds collected under § 153.220(d)(2) (proposed as (d)(3) in the proposed rule), as applicable, must be applied toward requests for reinsurance payments made under the State supplemental reinsurance payments parameters for each benefit year commencing in 2014 and ending in 2016.

We also proposed in § 153.232(c) that a reinsurance-eligible plan becomes eligible for reinsurance payments under a State's supplemental reinsurance parameters if its incurred claims costs for an individual enrollee's covered benefits during a benefit year exceed: (1)

The supplemental State attachment point; (2) the national reinsurance cap; or (3) the national attachment point, if the State has established a State supplemental coinsurance rate. This would allow reinsurance payments made under the State supplemental payment parameters to ''wrap around'' the uniform reinsurance payment parameters so that the State could apply any additional contributions it collects under proposed § 153.220(d) towards reinsurance payments beyond the uniform reinsurance payment parameters. We explained in the proposed rule that this approach permits HHS to distribute funds under the uniform payment formula to where they are needed most, while allowing States that elect to operate reinsurance the flexibility to supplement nationally calculated reinsurance payments. As set forth in § 153.240(b), States would be required to separate in their reporting to issuers the reinsurance payments paid under the uniform reinsurance payment parameters and State supplemental reinsurance payment parameters.

To ensure that reinsurance payments under State supplemental payment parameters do not overlap with the uniform reinsurance payment parameters, we proposed the method for calculating State supplemental reinsurance payments. Specifically, we proposed in § 153.232(d) that supplemental reinsurance payments with respect to a health insurance issuer's claims costs for an individual enrollee's covered benefits must be calculated by taking the sum of: (1) The product of such claims costs between the supplemental State attachment point and the national attachment point, multiplied by the national coinsurance rate (or applicable State supplemental coinsurance rate); (2) the product of such claims costs between the national reinsurance cap and the supplemental State reinsurance cap, multiplied by the national coinsurance rate (or applicable State supplemental coinsurance rate); and (3) the product of such claims costs between the national attachment point and the national reinsurance cap, multiplied by the difference between the State supplemental coinsurance rate and the national coinsurance rate.

Similar to payment calculations under the uniform reinsurance payment parameters, we proposed in § 153.232(e) that if all reinsurance payments requests under the State supplemental reinsurance parameters calculated in a State for a benefit year will exceed all the additional funds a State collects for reinsurance payments under § 153.220(d)(1)(ii) or State funds under § 153.220(d)(2) (proposed as (d)(3) in the proposed rule) as applicable, the State must determine a uniform pro rata adjustment to be applied to all such requests for reinsurance payments in the State. We proposed that each applicable reinsurance entity in the State must reduce all requests for reinsurance payments under the State supplemental reinsurance payment parameters for the applicable benefit year by that adjustment.

Finally, in § 153.232(f), we proposed that a State must ensure that reinsurance payments made to issuers under the State supplemental reinsurance payment parameters do not exceed the issuer's total paid amount for the reinsurance-eligible claims, and any remaining additional funds collected under § 153.220(d)(1)(ii) must be used for reinsurance payments under the State supplemental parameters in subsequent benefit years.

We are finalizing these provisions as proposed, with a technical correction changing ''non-grandfathered individual market plan'' to ''reinsurance-eligible plan'' and clarifying that the incurred claims costs for an individual enrollee's covered benefits are those incurred in the applicable benefit year in § 153.232(c). We are clarifying in § 153.232(d) that reinsurance payments will be calculated with respect to an issuer's incurred claims costs for an individual enrollee's covered benefits incurred in the applicable benefit year.

Comment: Several commenters urged HHS to allow additional State flexibility for the State supplemental reinsurance payment parameters under the reinsurance program. In addition, several commenters requested flexibility for a State to design a program that would cover any shortfall in payments under the reinsurance program's uniform parameters.

Response: One of HHS's goals is to provide the greatest amount of flexibility to States while ensuring consistency with the policy goals of the reinsurance program. Therefore, under these final rules, we have provided States with the flexibility to increase the coinsurance rate on reinsurance-eligible claims, which would have the effect of increasing payouts under the uniform parameters. Additionally, nothing in these final rules prevents a State from establishing a separate program that would operate alongside the reinsurance program established under section 1341 of the Affordable Care Act. A State establishing such a program is free to implement the collections methodology and payment formula of its own choosing.

9. Allocation and Distribution of Reinsurance Contributions

Section 153.220(d) of the Premium Stabilization Rule provided that HHS would distribute reinsurance contributions collected for reinsurance payments from a State to the applicable reinsurance entity for that State. In the proposed rule, we proposed to replace this section with § 153.235(a), which provided that HHS would allocate and distribute the reinsurance contributions collected under the national contribution rate based on the need for reinsurance payments, regardless of where the contributions are collected. HHS would disburse all contributions collected under the national contribution rate from all States for the applicable benefit year, based on all available contributions and the aggregate requests for reinsurance payments, net of the pro rata adjustment, if any. We believe that this method of disbursing reinsurance contributions will allow the reinsurance program to equitably stabilize premiums across the nation, and permit HHS to direct reinsurance funds based on the need for reinsurance payments. Consistent with this proposal, we proposed to amend § 153.220(a) to clarify that even if a State establishes the reinsurance program, HHS would directly collect the reinsurance contributions for enrollees who reside in that State from both health insurance issuers and self-insured group health plans.

We are finalizing the provisions as proposed in § 153.220(a). We are revising § 153.235(a) to provide that HHS will allocate and disburse to each State operating reinsurance (and will distribute directly to issuers if HHS is operating reinsurance on behalf of a State), reinsurance contributions collected from contributing entities under the national contribution rate for reinsurance payments. The disbursed funds would be based on the total requests for reinsurance payments made under the national reinsurance payment parameters in all States and submitted under § 153.410, net of any adjustment under § 153.230(d). We are amending § 153.410(a) to clarify that an issuer of a reinsurance-eligible plan may make requests for reinsurance payments when an issuer's claims costs for an enrollee of that reinsurance-eligible plan has met the criteria for reinsurance payments in 45 CFR subpart B and this final rule and where applicable the State notice of benefit and payment parameters.

Comment: Several commenters stated that the proposed allocation of reinsurance payments would penalize

States that effectively and efficiently manage health care costs and have fewer uninsured individuals. Commenters stated that individual markets are largely State-based and that reinsurance works in conjunction with risk adjustment, which is also a State-based program. Commenters also stated that disbursing reinsurance payments under uniform reinsurance payment parameters in all States is contrary to the intent of the statute for a State-based program. We also received comments stating that the implementation of the reinsurance program as proposed would increase the burden for States that wish to supplement the reinsurance program. One commenter suggested that reinsurance payment allocations in accordance with need could discourage issuers from maintaining grandfathered status in order to compete for funds, thereby making it difficult for enrollees to keep their current plan.

Response: To maximize the reinsurance program's impact on premium rates, an allocation of reinsurance payments under uniform payment parameters allows for HHS to disburse reinsurance contributions where they are most needed, to reimburse issuers with high cost claims in the individual market in 2014, 2015 and 2016. This policy is consistent with the statutory goals of the reinsurance program—to stabilize premiums in the initial years of Exchange implementation and market reform. Considering the comments received, we are finalizing these provisions as proposed.

Comment: Several commenters asked that HHS refund any unused contributions collected or use those funds to lower the contribution rate for subsequent benefit years.

Response: The purpose of the reinsurance program is to stabilize premiums in the individual market beginning in 2014. If any funds remain after all requests for reinsurance payments are made for any benefit year, as required by the statute, HHS plans to use those funds for reinsurance payments in subsequent benefit years, furthering the goal of section 1341 of the Affordable Care Act.

Comment: Several commenters supported HHS's proposed annual payments schedule coupled with quarterly reporting estimates. One commenter requested clarification on whether reinsurance payments would be issued on a rolling basis throughout the year, or once annually. Several commenters requested that HHS administer reinsurance payments throughout the year instead of annually to better accommodate issuers' cash flow.

Response: Because we are seeking to stabilize premiums nationally, an annual disbursement of payments preserves fairness in making reinsurance payments and allows for HHS to appropriately adjust payments, if needed. To better address administrative and operational issues, we proposed to make an annual reinsurance payment for each benefit year. If we were to collect and make reinsurance payments throughout the benefit year, we would likely be required to hold the disbursement of a large portion of the reinsurance payments until the end of the benefit year to ensure an equitable allocation of payments.

Comment: Several commenters sought clarification on the process by which HHS plans to ensure that reinsurance funds will be used to reduce and stabilize premiums in the individual market.

Response: We expect that an issuer that receives reinsurance payments will reduce premiums in the individual market accordingly. We note that a State, or HHS operating reinsurance on behalf of the State, will provide issuers the estimated amount of the reinsurance payments throughout a benefit year so that those issuers can account for reinsurance payments in developing their premiums for subsequent benefit years. We note that under the single risk pool requirement of the final Market Reform Rule (§ 156.80), issuers of non-grandfathered individual market plans must adjust their index rate based on the total expected market-wide payments and charges under the risk adjustment and reinsurance programs in the State, and based on Exchange user fees.

Comment: Several commenters asked HHS how excess reinsurance funds would be distributed after 2016.

Response: HHS will provide details regarding this issue in future rulemaking and guidance.

10. Reinsurance Data Collection Standards

a. Data Collection Standards for Reinsurance Payments

Section 153.240(a) of the Premium Stabilization Rule directs a State's applicable reinsurance entity to collect data needed to determine reinsurance payments as described in § 153.230. We proposed to amend § 153.240(a) by adding subparagraph (1) which would direct a State to ensure that its applicable reinsurance entity either collects or is provided access to the data necessary to determine reinsurance payments from an issuer of a reinsurance-eligible plan. When HHS operates reinsurance on behalf of a State, HHS would utilize the same distributed data collection approach proposed for risk adjustment. This proposed amendment was meant to clarify that an applicable reinsurance entity may either use a distributed data collection approach for its reinsurance program or directly collect privacy-protected data from issuers to determine an issuer's reinsurance payments. The distributed data collection approach would not involve the direct collection of data; instead, HHS or the State would access data on issuers' secure servers.

We also proposed to amend § 153.240(a) by adding subparagraph (3), directing States to provide a process through which an issuer of a reinsurance-eligible plan that does not generate individual enrollee claims in the normal course of business, such as a capitated plan, may request reinsurance payments or submit data to be considered for reinsurance payments based on estimated costs of encounters for the plan, in accordance with the requirements of § 153.410. We proposed to direct States to ensure that such requests (or a subset of such requests) are subject to, to the extent required by the State, a data validation program. A State would have the flexibility to design a data validation program that meets its adopted methodology and State-specific circumstances. This proposed amendment would enable certain reinsurance-eligible plans, such as staff-model health maintenance organizations, that do not generate claims with associated costs in the normal course of business to provide data to request and receive reinsurance payments.

When HHS operates reinsurance on behalf of a State, issuers of capitated plans would generate claims for encounters, and derive costs for those claims when submitting requests for reinsurance payments (or submitting data to be considered for reinsurance payments). It is our understanding that many capitated plans currently use some form of encounter data pricing methodology to derive claims, often by imputing an amount based upon the Medicare fee-for-service equivalent price or the usual, customary, and reasonable equivalent that would have been paid for the service in the applicable market. As set forth in § 153.710(c), a capitated plan would be required to use its principal internal methodology for pricing encounters for reinsurance purposes, such as the methodology in use for other State or

Federal programs (for example, a methodology used for the Medicare Advantage market). If a capitated plan has no such methodology, or has an incomplete methodology, it would be permitted to implement a methodology or supplement the methodology in a manner that yields derived claims that are reasonable in light of the specific market that the plan is serving. Capitated plans, like all plans that submit reinsurance payment requests (or data to be considered for reinsurance payments) in the HHS-operated reinsurance program, would be subject to validation and audit. Because capitated plans already use pricing methodologies, we believe this proposed policy would permit capitated plans to participate in the reinsurance program with a minimal increase in administrative burden. We have responded to the comments received regarding capitated plans in section III.G. of this final rule, where capitated plans are discussed in § 153.710(c). We are finalizing these provisions as proposed.

b. Notification of Reinsurance Payments

We proposed to add § 153.240(b)(1), which would direct a State, or HHS on behalf of the State, to notify issuers of the total amount of reinsurance payments that will be made no later than June 30 of the year following the applicable benefit year. This corresponds with the date on which a State or HHS must notify issuers of risk adjustment payments and charges. As such, by June 30 of the year following the applicable benefit year, issuers would be notified of reinsurance payments and risk adjustment payments and charges, allowing issuers to account for their total reinsurance payments and risk adjustment payments and charges when submitting data for the risk corridors and MLR programs. To provide issuers in the individual market with information to assist in development of premiums and rates in subsequent benefit years, we also proposed in § 153.240(b)(2) that a State provide quarterly notifications of estimates to each reinsurance-eligible plan of the expected requests for reinsurance payments. HHS intends to collaborate with issuers and States to develop these early notifications. We are finalizing these provisions as proposed.

Comment: Several commenters requested that HHS specify a date by which HHS will make reinsurance payments.

Response: Under § 153.240(b), HHS would notify issuers of reinsurance payments to be made under the uniform payment parameters by June 30 of the year following the applicable benefit year. We will make every effort to issue payments as quickly as possible. We anticipate issuing further guidance regarding reinsurance payments.

Comment: One commenter requested that, if a State is operates reinsurance in the 2014 benefit year, the deadline for issuers to file rates be moved to April 30 because State supplemental reinsurance payment parameters will affect premium rate setting. The commenter also requested that for the 2015 and 2016 benefit years, HHS require States to publish the State notice of benefit and payments parameters no later than January 31 of the prior year to provide issuers with ample time to calculate and submit rates for filing approval by March 28.

Response: We understand the challenges posed by various State and Federal deadlines, and anticipate that all stakeholders will work together with both States and HHS to meet those deadlines. However, State deadlines for submitting rates are within the authority of the State.

c. Privacy and Security Standards

We proposed in § 153.240(d)(1) that a State establishing the reinsurance program ensure that the applicable reinsurance entity's collection of personally identifiable information [22] is limited to information reasonably necessary for use in the calculation of reinsurance payments, and that use and disclosure of personally identifiable information is limited to those purposes for which the personally identifiable information was collected (including for purposes of data validation). In § 153.240(d)(2), we proposed to require that an applicable reinsurance entity implement specific privacy and security standards to ensure enrollee privacy and to protect sensitive information. Specifically, this provision would require an applicable reinsurance entity to provide administrative, physical, and technical safeguards for personally identifiable information that may be used to request reinsurance payments. This provision is meant to ensure that an applicable reinsurance entity complies with the same privacy and security standards that apply to issuers and providers, specifically, the security standards described at § 164.308, § 164.310, and § 164.312. We are finalizing these provisions as proposed.

Comment: We received comments supporting the privacy and security standards set forth in § 153.240(d) and suggesting audits and other safeguards to protect personal health information from inappropriate disclosure.

Response: HHS takes seriously its responsibility to monitor the implementation of these programs, including the protection of the privacy of consumers. We will provide more information on our approach to these and other oversight matters in future rulemaking.

d. Data Collection

We proposed in § 153.420(a) that an issuer of a reinsurance-eligible plan seeking reinsurance payments submit or make accessible data, in accordance with the reinsurance data collection approach established by the State, or HHS on behalf of the State. In § 153.420(b), we proposed that an issuer of a reinsurance-eligible plan submit data to be considered for reinsurance payments for the applicable benefit year by April 30 of the year following the end of the applicable benefit year. The April 30 deadline would apply to all issuers of reinsurance-eligible plans, regardless of whether HHS or the State is operating reinsurance. Further details surrounding the data collection process when HHS is operating reinsurance on behalf of a State is set forth in subpart H of part 153 and section III.G. of this final rule. We are finalizing these provisions as proposed.

Comment: Several commenters requested clarification on the claims run-out period.

Response: An issuer of a risk adjustment covered plan or reinsurance eligible plan in a State in which HHS is operating the risk adjustment or reinsurance program would submit data for a benefit year by April 30 of the year following the applicable benefit year. For example, claims incurred in the 2014 benefit year must be submitted to HHS by April 30, 2015. The submission deadline (the latest date by which data can be provided for the applicable benefit year) will allow issuers the time necessary to process claims and submit data to their distributed data systems for HHS evaluation. The submission deadline of April 30 of the year following the applicable benefit year also permits HHS an appropriate timeline for payment calculations. However, as described in section III.G. of this final rule, claims submitted for the reinsurance program and encounter data submitted for the risk adjustment program must be for claims and encounters with discharge dates within the applicable benefit year. Use of the discharge date best ensures that services provided across benefit years will be

[22] As discussed above, the term ''personally identifiable information'' is a broadly used term across Federal agencies, and has been defined in the Office of Management and Budget Memorandum M–07–16 (May 22, 2007). Available at:

considered in their entirety rather than being partially or fully excluded from consideration as a result of the data submission timing requirements.

D. Provisions for the Temporary Risk Corridors Program

1. Definitions

In the Premium Stabilization Rule, we stated in response to comments that we intended to propose that taxes and profits be accounted for in the risk corridors calculation, in a manner consistent with the MLR program. Therefore, in the proposed rule, we proposed to amend § 153.500 by defining ''taxes'' with respect to a QHP as Federal and State licensing and regulatory fees paid with respect to the QHP as described in § 158.161(a), and Federal and State taxes and assessments paid for the QHP as described in § 158.162(a)(1) and § 158.162(b)(1). This definition aligns with the regulatory fees and taxes and assessments deductible from premiums in the MLR calculation. We used this definition to define ''after-tax premiums earned,'' which we proposed to mean, with respect to a QHP, premiums earned minus ''taxes.'' We also proposed to revise the definition of ''administrative costs'' in § 153.500 to mean, with respect to a QHP, the total non-claims costs incurred by the QHP issuer for the QHP, including taxes. We noted that under this broader definition, administrative costs may also include regulatory fees and assessments other than those included in ''taxes,'' as defined above.

Using the definitions above, we proposed to amend § 153.500 by defining ''profits'' with respect to a QHP to mean the greater of: (1) 3 percent of after-tax premiums earned; and (2) premiums earned by the QHP minus the sum of allowable costs and administrative costs of the QHP. Thus, we proposed to define profits for a QHP through the use of the risk corridors equation; however, we provided for a 3 percent profit margin so that the risk corridors program would protect a reasonable profit margin (subject to the 20 percent cap on allowable administrative costs as described below).

Finally, using the definition of profits discussed above, we proposed to revise the definition of ''allowable administrative costs'' in § 153.500 to mean, with respect to a QHP, the sum of administrative costs other than taxes, and profits earned, which sum is limited to 20 percent of after-tax premiums earned (including any premium tax credit under any governmental program), plus taxes. This definition reflects the inclusion of profits and taxes discussed above, and clarifies that the 20 percent cap on allowable administrative costs applies to taxes, assessments and regulatory fees other than those taxes, assessments and regulatory fees defined as deductible from premium revenue under the MLR rules, a result that is consistent with the way they are accounted for by the MLR rules.

The preamble to our proposed rule contained an example that illustrated the proposed operation of the risk corridors calculation. We have included a minor correction to the calculation of profits in this example:

- *Premiums earned:* Assume a QHP with premiums earned of $200.
- *Allowable costs:* Assume allowable costs of $140, including expenses for health care quality and health information technology, and other applicable adjustments.
- *Non-claims costs:* Assume that the QHP has non-claims costs of $50, of which $15 are properly allocable to licensing and regulatory fees and taxes and assessments described in § 158.161(a), § 158.162(a)(1), and § 158.162(b)(1) (that is, ''taxes'').

The following calculations result:

- *''Taxes'':* Under the proposed definition of taxes, the QHP's ''taxes'' will be $15.
- *Administrative costs* are defined as non-claims costs. In this case, those costs would be $50. Administrative costs other than ''taxes'' would be $35.
- *After-tax premiums earned* are defined as premiums earned minus ''taxes,'' or in this case $200 − $15 = $185.
- *Profits* are proposed to be defined as the greater of: 3 percent of premiums earned, or 3 percent * $185 = $5.55; and premiums earned by the QHP minus the sum of allowable costs and administrative costs, or $200 − ($140 + $50) = $200 − $190 = $10. Therefore, profits for the QHP would be $10, which is greater than $5.55
- *Allowable administrative costs* are defined as the sum of administrative costs, other than ''taxes,'' plus profits earned by the QHP, which sum is limited to 20 percent of after-tax premiums earned by the QHP (including any premium tax credit under any governmental program), plus ''taxes.''

= ($35 + $10), limited to 20 percent of $185, plus $15
= $45, limited to $37, plus $15
= $37, plus $15
= $52.

- *The target amount* is defined as premiums earned reduced by allowable administrative costs, or $200 − $52 = $148.
- *The risk corridors ratio* is the ratio of allowable costs to target amount, or the ratio of $140 to $148, or approximately 94.6 percent (rounded to the nearest one-tenth of one percent), meaning that the QHP issuer would be required to remit to HHS 50 percent of approximately (97 percent − 94.6 percent) = 50 percent of 2.4 percent, or approximately 1.2 percent of the target amount, or approximately 0.012 * $148, or approximately $1.78.

We sought comments on the estimates, data sources, and appropriate profit margin to use in the risk corridors calculation in the proposed rule. We are finalizing these proposed provisions with the following modifications. As discussed below, in order to conform with changes finalized in this rule for the MLR program, and in response to comments, we are deleting § 153.530(b)(1)(ii) to eliminate the adjustment to allowable costs for reinsurance contributions made by an issuer, and are clarifying the treatment of community benefit expenditures within the risk corridors calculation. We are also modifying our proposed definition of ''taxes'' in § 153.500, by replacing the term ''taxes'' with ''taxes and regulatory fees.''

Comment: A few commenters noted that, while the proposed rule stated that the risk corridors profits calculation was based on after-tax premiums, the example in the preamble to the proposed rule calculated 3 percent of profits based on a pre-tax premium amount (that is, earned premiums).

Response: We are finalizing the definition of ''profits'' based on after-tax premiums, as proposed. We have corrected the profits calculation example in the preamble.

Comment: Two commenters stated that the risk corridors formula is potentially circular, and asked us to reexamine the treatment of profits and taxes in the risk corridors calculation. Because taxes are a parameter in the risk corridors calculation, if risk corridors payments are taken into account when estimating taxes, the commenters believed that it would result in an iterative effect that could affect the width of the risk corridors. They stated that a similar effect would occur with respect to profits.

Response: In response to these comments, we are clarifying that, similar to the manner in which the MLR is calculated, an issuer should not consider risk corridors payments and charges when estimating taxes under the risk corridors formula. As described in the preamble to the Premium Stabilization Rule, we seek alignment between the MLR and risk corridors

programs when practicable so that similar concepts in the two programs are handled in a similar manner, and similar policy goals are reflected. Consequently, our treatment of taxes for risk corridors purposes follows the approach of the MLR program, as outlined in section 3C of the model MLR regulation published by the National Association of Insurance Commissioners (NAIC).[23] We note that, because of the way profits is defined for the risk corridors calculation, no such circularity will occur with profits.

Comment: One commenter asked whether reinsurance contributions could be considered as ''taxes and regulatory fees'' when determining ''allowable administrative costs'' in the denominator of the risk corridors calculation.

Response: We note that other provisions of this final rule amend the MLR calculation so that reinsurance contributions are included in Federal and State licensing and regulatory fees paid with respect to the QHP as described in § 158.161(a), and are deducted from premiums for MLR purposes. Our proposed definition of ''taxes'' for purposes of the risk corridors program cross-referenced § 158.161(a) and similarly included reinsurance contributions. Thus, in response to these comments, and to maintain consistency with the MLR calculation and our proposed definition, which we are finalizing as proposed, we are making a conforming amendment to § 153.530(b)(1). In this final rule, we are deleting § 153.530(b)(1)(ii) and clarifying that reinsurance contributions are included in Federal and State licensing and regulatory fees paid with respect to the QHP as described in § 158.161(a), and thus are included in allowable administrative costs for risk corridors purposes. We are also making a conforming change to § 153.520(d) to remove the requirement that a QHP issuer must attribute reinsurance contributions to allowable costs for the benefit year. In addition, we are making a conforming modification to the proposed definition of ''taxes'' in § 153.500, by replacing the term ''taxes'' with ''taxes and regulatory fees.''

Comment: Nearly all those that commented on the risk corridors profit margin agreed with the 3 percent profit margin set in the proposed rule. One commenter suggested that a 2 percent profit margin would be more appropriate.

Response: Based on the comments received and the policy arguments outlined in our proposed rule, we are finalizing the definition of ''profits'' in § 153.500 as proposed.

Comment: One commenter expressed concern that an allowance for up to 3 percent profit could disrupt the budget neutrality of the risk corridors program, and asked for clarification on HHS's plans for funding risk corridors if payments exceed receipts.

Response: The risk corridors program is not statutorily required to be budget neutral. Regardless of the balance of payments and receipts, HHS will remit payments as required under section 1342 of the Affordable Care Act.

Comment: One commenter stated that the risk corridors calculation does not account for the credibility adjustment that is part of the MLR formula, and recommended setting maximum allowable administrative costs at 20 percent plus the allowed credibility adjustment for the carrier's block of business. The commenter believed that this change would be consistent with the MLR formula and make it more viable for carriers to maintain their smaller blocks of business, given the higher claims volatility that often characterizes these smaller blocks of business.

Response: Although we seek consistency with MLR where the risk corridors and MLR formulas contain similar parameters, we believe that the credibility adjustment is a unique parameter in the MLR formula. The MLR statute provides for a credibility adjustment through ''methodologies * * * designed to take into account the special circumstances of smaller plans, different types of plans, and newer plans'' at section 2718(c) of the Affordable Care Act. No similar reference appears in section 1342 of the Affordable Care Act.

Comment: One commenter requested clarification on whether community benefit expenses would be included in the taxes of non-profit entities for the purposes of calculating the risk corridors target amount.

Response: We believe that accounting for these expenses as taxes when calculating the target amount would appropriately align the risk corridors formula with the MLR calculation. Our proposed definition of ''taxes'' in § 153.500 includes Federal and State taxes defined in § 158.162(b), which describes payments made by a tax-exempt issuer for community benefit expenditures. Consequently, we are clarifying that non-profit entities may account for community benefit expenditures as ''taxes and regulatory fees'' in a manner consistent with the MLR reporting requirements set forth in § 158.162 for the purposes of calculating the risk corridors target amount.

2. Risk Corridors Establishment and Payment Methodology

We proposed to add paragraph (d) to § 153.510, which would specify the due date for QHP issuers to remit risk corridors charges to HHS. Under this provision, an issuer would be required to remit charges within 30 days after notification of the charges. By June 30 of the year following an applicable benefit year, under § 153.310(e), QHP issuers will have been notified of risk adjustment payments and charges for the applicable benefit year. By that same date, under § 153.240(b)(1), QHP issuers also will have been notified of all reinsurance payments to be made for the applicable benefit year. As such, we proposed in § 153.530(d) that the due date for QHP issuers to submit all information required under § 153.530 of the Premium Stabilization Rule is July 31 of the year following the applicable benefit year. We also proposed that the MLR reporting deadline be revised to align with this schedule. We are finalizing this provision as proposed.

Comment: We received several supportive comments on our proposal to require issuers to submit risk corridors information by July 31 of the year following the applicable benefit year.

Response: We are finalizing § 153.530(d) as proposed, so that the due date for QHP issuers to submit all risk corridors information is July 31 of the year following the applicable benefit year. In section III.I.1. of this final rule, we also finalize our proposal to align the MLR reporting deadline with this schedule.

Comment: One commenter asked how payments made under the State supplemental reinsurance payment parameters are taken into account in the risk corridors calculation. Another commenter requested that HHS clarify the treatment of State ''wrap-around'' reinsurance payments under the risk corridors calculation, and asked for information on the way in which HHS analyzed the impact of the administrative burden associated with removing these costs.

Response: Under section 1342(c)(1)(B) of the Affordable Care Act, allowable costs are to be reduced by any risk adjustment and reinsurance payments received under sections 1341 and 1343. Supplemental reinsurance payments

[23] Section 3C of the NAIC model regulation, available at *http://www.naic.org/documents/committees_ex_mlr_reg_asadopted.pdf* states, ''[a]ll terms defined in this Regulation, whether in this Section or elsewhere, shall be construed, and all calculations provided for by this Regulation shall be performed, as to exclude the financial impact of any of the rebates provided for in sections 8, 9, and 10 [rebate calculation sections].''

made under State supplemental reinsurance payment parameters are reinsurance payments received under sections 1341 of the Affordable Care Act; thus, allowable costs in the risk corridors formula are to be reduced by the reinsurance payments received both under the uniform payment parameters and any State supplemental reinsurance payment parameters.

We do not believe that adjusting the risk corridors formula to account for this parameter will result in any additional administrative burden on issuers, because issuers will be performing the calculations to account for these adjustments at the same time they adjust for reinsurance payments under the uniform payment parameters.

Comment: One commenter suggested that we align the risk corridors calculation with their suggestions on the MLR calculation, which would entail accounting for risk adjustment transfers and reinsurance contributions as adjustments to premiums, rather than claims. Another commenter similarly recommended that reinsurance payments be treated as an adjustment to premiums in the risk corridors calculation, noting that such an approach would reflect current market practices.

Response: We do not believe we have the statutory authority to accommodate this request, because section 1342(c)(1)(B) of the Affordable Care Act requires reducing allowable costs for reinsurance and risk adjustment payments received.

Comment: A number of commenters indicated that risk corridors should be calculated at the issuer level as opposed to the QHP level. One commenter indicated that the current policy of calculating risk corridors at the plan level is inconsistent with the single risk pool requirement in the proposed Market Reform Rule (77 FR 70584), and other issuers pointed out other policy concerns, such as non-alignment with MLR and lack of statistical credibility.

Response: We agree that a plan-level risk corridors calculation creates an incongruity with the single risk pool requirement set forth at § 156.80. Under the regulation as written, risk corridors would compare allowable costs (adjusted claims), which are currently plan-specific, and target amount (adjusted premiums), which under the single risk pool requirement must be based on market-wide expected claims. After considering comments received on the proposed rule, we are publishing an interim final rule elsewhere in this issue of the **Federal Register** to address alignment of the risk corridors calculations with the single risk pool requirement. Under the approach implemented in the interim final rule, an issuer could reasonably allocate, in accordance with § 153.520, allowable administrative costs across its business pro rata by premiums earned, leading to an issuer-level risk corridors calculation for its QHP business.

3. Risk Corridors Data Requirements

In § 153.530 of the Premium Stabilization Rule, we stated that to support the risk corridors program calculations, a QHP issuer must submit data related to actual premium amounts collected, including premium amounts paid by parties other than the enrollee in a QHP, specifically, advance premium tax credits. We further specified that risk adjustment and reinsurance payments be regarded as after-the-fact adjustments to allowable costs for purposes of determining risk corridors amounts, and that allowable costs be reduced by the amount of any cost-sharing reductions received from HHS. For example, if a QHP incurred $200 in allowable costs for a benefit year, but received a risk adjustment payment of $25, received reinsurance payments of $35, and received cost-sharing reduction payments of $15, the QHP issuer's allowable costs would be $125 ($200 allowable costs − $25 risk adjustment payments received − $35 reinsurance payments received − $15 cost-sharing reduction payments).

We additionally proposed an approach to reimbursement of cost-sharing reductions that would add an additional reimbursement requirement for cost-sharing reductions by providers with whom the issuer has a fee-for-service compensation arrangement. We proposed that issuers be reimbursed for, in the case of a benefit for which the issuer compensates the provider in whole or in part on a fee-for-service basis, the actual amount of cost-sharing reductions provided to the enrollee for the benefit and reimbursed to the provider by the issuer. However, we clarified that cost-sharing reductions on benefits rendered by providers for which the issuer provides compensation other than on a fee-for-service arrangement (such as a capitated system), would not be held to this standard.

We also proposed to amend § 153.530(b)(2)(iii) so that allowable costs are reduced by any cost-sharing reduction payments received by the issuer for the QHP to the extent not reimbursed to the provider furnishing the item or service. We received no responses to our request for comment on this proposal. Therefore, we are finalizing this provision as proposed.

4. Manner of Risk Corridor Data Collection

We also proposed to amend § 153.530(a), (b), and (c) to specify that we will address the manner of submitting required risk corridors data in future guidance rather than in this HHS notice of benefit and payment parameters. We received no responses to our request for comment on this proposal. Therefore, we are finalizing this provision as proposed.

E. Provisions for the Advance Payment of the Premium Tax Credit and Cost-Sharing Reduction Programs

1. Exchange Responsibilities With Respect to Advance Payments of the Premium Tax Credit and Cost-Sharing Reductions

a. Special Rule for Family Policies

We proposed to amend § 155.305(g)(3), currently entitled ''special rule for multiple tax households.'' Our proposed amendment renamed this paragraph ''special rule for family policies,'' added a category for qualified individuals who are not eligible for any cost-sharing reductions, and revised the introductory text to address situations in which Indians (as defined in § 155.300(a)) and non-Indians enroll in a family policy. The proposed amendment also extended the current policy with respect to tax households such that individuals on a family policy would be eligible to be assigned to the most generous plan variation for which all members of the family are eligible. We noted that nothing in this provision precludes qualified individuals with different levels of eligibility for cost-sharing reductions from purchasing separate policies to secure the highest cost-sharing reductions for which they are respectively eligible.

We discuss this policy further with regard to Indians eligible for cost-sharing reductions under section 1402(d) of the Affordable Care Act in section III.E.4.i. of this final rule. We are finalizing these provisions as proposed.

Comment: Several commenters supported the proposed policy, noting that it would be operationally infeasible for QHP issuers to have two family members with different cost-sharing levels enrolled in the same policy. Other commenters stated that families should not need to purchase multiple individual plans so that each family member can receive the full value of the cost-sharing reductions for which they are eligible. Commenters expressed concern that for large families, premiums for multiple individual plans could offset the value of the cost-sharing

reduction, as well as potentially subjecting family members to separate out-of-pocket maximums and separate deductibles. One commenter suggested the option of a family-based plan that offers a weighted actuarial value reflecting the cost-sharing reductions available to individual members. Another commenter was concerned about the ability of Exchanges to explain to consumers the advantages and disadvantages of buying multiple policies versus one family policy.

Response: As deductibles and out-of-pocket limits are calculated at the policy level, we believe it will be operationally difficult to establish separate cost-sharing requirements for different enrollees covered by the same policy at this time. HHS will encourage Exchanges to provide appropriate guidance to consumers on the relative costs and benefits of enrolling in one family policy versus multiple individual policies so that families can best take advantage of cost-sharing reductions.

b. Recalculation of Advance Payments of the Premium Tax Credit and Cost-Sharing Reductions

We proposed to add paragraph (g) to § 155.330 to clarify how an Exchange would redetermine the eligibility of an enrollee during a benefit year if an Exchange receives and verifies new information reported by an enrollee or identifies updated information through data matching that affects eligibility for advance payments of the premium tax credit and cost-sharing reductions. We proposed that when an Exchange recalculates the amount of advance payments of the premium tax credit available after considering such a change, an Exchange must account for any advance payments already made on behalf of the tax filer in that benefit year to minimize, to the extent possible, any projected discrepancies between the advance payments and the tax filer's projected premium tax credit for the benefit year. We specified that this recalculation will only include months for which the tax filer has been determined eligible for advance payments of the premium tax credit. We also proposed that, when redetermining eligibility for cost-sharing reductions during the benefit year, an Exchange must determine an individual to be eligible for the category of cost-sharing reductions that corresponds to the individual's expected annual household income for the benefit year. Further detail and examples of this policy were provided in the proposed rule.

We further noted in the preamble that we considered taking a different approach if an eligibility redetermination during the benefit year resulted in an increase in advance payments of the premium tax credit—we considered proposing that in such a situation, HHS would make retroactive payments to the QHP issuer for all prior months of the benefit year to reflect the increased advance payment amount, not to exceed the total premium for each month. We solicited comments regarding whether we should adopt this approach, and if so, how QHP issuers should be required to provide the retroactive payments to enrollees. Several commenters raised concerns regarding the operational and administrative challenges associated with such retroactive payments.

We are finalizing the policy substantially as proposed, with modifications to the language in paragraph (g) to increase clarity. We are not implementing the retroactive payment approach.

Comment: A number of commenters expressed their support for the proposed approach, though some sought further clarification regarding the impact of eligibility redeterminations on advance payments of the premium tax credit and cost-sharing reductions. Several commenters also requested that HHS modify the proposed approach, by placing a limit on the number of redeterminations per benefit year to reduce administrative burden, or by providing that when accounting for advance payments of the premium tax credit already received by an enrollee whose income has since increased, an Exchange should never reduce the enrollee's future payments by more than the limits on repayment following the benefit year as specified in 26 CFR 1.36B–4(a). Another commenter urged that HHS require QHP issuers to conduct extensive outreach to enrollees to effectively implement this provision.

Further, although several commenters expressed support for how the alternative proposal could assist enrollees with issues such as past due premium amounts, we also received several comments raising concerns and seeking additional specificity. Commenters mentioned the operational and administrative challenges that the alternative proposal would pose for both QHP issuers as well as HHS, and stated that the potential advantages for enrollees would be minimal.

Response: We provide additional detail on redeterminations during the benefit year and their implications for cost-sharing reductions in § 156.425. We note that redetermining eligibility when changes occur is important to the accuracy of eligibility determinations during the year. We also note that we expect that QHP issuers will provide guidance to enrollees regarding the importance of reporting changes, and the avenues through which changes can be reported. In finalizing the policy as proposed, we do not specify that the Exchange will consider the statutory limits on repayment, as these limits are separate from the premium tax credit calculation itself, and are intended to be applied at the time of tax filing.

After considering the comments regarding the operational and administrative challenges involved with the alternative proposal, we decided to maintain the approach proposed. We believe that the comments received that questioned the benefits associated with the alternative on which we requested comment, combined with the operational concerns regarding how HHS would provide such retroactive payments to QHP issuers and the process through which QHP issuers would reimburse enrollees, outweigh the potential benefit for enrollees.

c. Administration of Advance Payments of the Premium Tax Credit and Cost-Sharing Reductions

Under our authority to administer the payment of cost-sharing reductions and advance payments of the premium tax credits conferred in section 1412 and the rulemaking authority conferred in section 1321(a) of the Affordable Care Act, we proposed to add two paragraphs to § 155.340. First, we proposed to add paragraph (e) to § 155.340, which would provide that if one or more individuals in a tax household who are eligible for advance payments of the premium tax credit collectively enroll in more than one policy through the Exchange (whether by enrolling in more than one policy under a QHP, enrolling in more than one QHP, or enrolling in one or more QHPs and one or more stand-alone dental plans) for any month in a benefit year, the Exchange would allocate the advance payment of the premium tax credit(s) in accordance with the methodology proposed in § 155.340(e)(1) and (2). Under that methodology, the Exchange must first allocate the portion of the advance payment of the premium tax credit(s) that is less than or equal to the aggregate adjusted monthly premiums for the QHP policies, as defined under 26 CFR 1.36B–3(e), properly allocated to EHB, among the QHP policies in proportion to the respective portions of the premiums for the policies properly allocated to EHB. Any remaining advance payment of the premium tax credit(s) must be allocated among the stand-alone dental policies in proportion to the respective portions of

the adjusted monthly premiums for the stand-alone dental policies properly allocated to the pediatric dental EHB. We provided additional detail on the allocation methodology in the proposed rule and welcomed comments on this proposal.

As discussed in greater detail below, we received a number of comments on the allocation of advance payments of premium tax credits among QHPs and stand-alone dental plans. We also received one comment expressing concern that the proposed allocation methodology was too complicated and may prevent consumers from selecting a plan or the plans that are in the household's best interest. In particular, the proposed pro rata distribution by premium delays the calculation of the allocation of the advance payments until after QHPs have been selected. This delay would prevent an Exchange from displaying the amount of premium that a household would pay out-of-pocket for each plan until all plans have been selected.

We do not want to restrict the way that an Exchange develops the consumer shopping experience, and therefore, considering the comment received on this approach, we are modifying the proposed rule and finalizing a policy to allow Exchanges greater flexibility in allocating the advance payment of the premium tax credit if the individuals in the tax filers' tax household(s) are enrolled in more than one QHP or stand-alone dental plan. Specifically, as finalized in § 155.340(e), if one or more advance payments of the premium tax credit are to be made on behalf of a tax filer (or two tax filers covered by the same plan(s)), and individuals in the tax filers' tax households are enrolled in more than one QHP or stand-alone dental plan, then the advance payment must be allocated as follows: (1) that portion of the advance payment of the premium tax credit that is less than or equal to the aggregate adjusted monthly premiums, as defined in 26 CFR § 1.36B–3(e), for the QHP policies properly allocated to EHB must be allocated among the QHP policies in a reasonable and consistent manner specified by the Exchange; and (2) any remaining advance payment of the premium tax credit must be allocated among the stand-alone dental policies (if any) in a reasonable and consistent manner specified by the Exchange. We do not choose to set specific parameters for the allocation approach; however, the Exchange must apply the same approach to all advance payments of the premium tax credit provided during a benefit year. We are also making some clarifying modifications to the language of this provision.

For Federally-facilitated Exchanges, we establish a methodology at § 155.340(f) in which the advance payment of the premium tax credit is allocated based on the number of enrollees covered under the QHP or stand-alone dental policy, weighted by the age of the enrollees, using the default uniform age rating curve established by the Secretary of HHS under § 147.102(e) of the final Market Reform Rule.[24] If this methodology results in an advance payment of the premium tax credit allocation that exceeds a QHP's adjusted monthly premium properly allocated to EHB, the surplus advance payment of the premium tax credit will be allocated evenly to any of the other QHP policies, up to the applicable adjusted monthly premium properly allocated to EHB. And, in accordance with the general policy, any advance payment of the premium tax credit above the aggregate adjusted monthly premiums for the QHP policies properly allocated to EHB must be allocated among the stand-alone dental policies in a similar manner. We provide the following example:

- A family that is eligible for a premium tax credit and is made up of a child age 18 and two parents age 53 purchases two QHP policies and a stand-alone dental policy on an FFE. One parent and the child are enrolled in QHP A, with an adjusted monthly premium allocable to EHB of $470. The other parent is enrolled in QHP B, with an adjusted monthly premium allocable to EHB of $350. The child is enrolled in the stand-alone dental policy, with an adjusted monthly premium of $20, with all $20 allocable to EHB. The family receives a monthly advance payment of the premium tax credit equal to $830. On an FFE, $820 would be allocated between the two QHPs (that is, the portion of the advance payment of the premium tax credit that is less than or equal to the aggregate premiums for the QHP policies allocable to EHB), and the remainder ($10) would be allocated to the stand-alone dental plan. Assuming the default uniform age curve requires rates for an individual aged 53 to be adjusted by 2.04, and rates for an individual aged 18 to be adjusted by 0.635, $465 ((820/(2.04 + 2.04 + 0.635))* (2.04 + 0.635)) would be allocated to QHP A and $355 (820/(2.04 + 2.04 + 0.635))*2.04) would be allocated to QHP B. However, because $355 exceeds the portion of QHP A's premium allocable to EHB, the surplus allocation ($5) is shifted from QHP A to QHP B. Therefore, $350 will be applied to the premium for QHP A, $470 for QHP B, and $10 for the stand-alone dental plan.

This approach will allow an FFE to determine the allocation of the advance payment of the premium tax credit prior to plan selection so that we may display the amount of premium that a household would pay out-of-pocket for each plan during the shopping experience. At the same time, this approach approximates an allocation based on premiums (prioritizing the QHP policies over the stand-alone dental plan coverage as we proposed). State-based Exchanges may choose to adopt the Federal methodology or another reasonable methodology under § 155.340(e) of this final rule.

Comment: We received a comment stating that the methodology proposed in § 155.340(e)(1) and (2) will be too complicated for the average consumer to understand, particularly for complex households. The proposed methodology would prevent an Exchange from displaying the amount of premium that a household would pay out-of-pocket for each plan until all plans have been selected. If out-of-pocket costs cannot be shown at a plan level prior to selection, consumers could be dissuaded from purchasing coverage or might select a single plan for all household members, even if doing so is not in the household's best interest. The commenter proposed that Exchanges allocate the advance payment of the premium tax credit(s) equally to each household member to allow consumers to view the amounts of advance payment of the premium tax credit(s) allocated to each QHP or stand-alone dental plan during the shopping experience, and to permit consumers to compare more effectively different plan options and family member groupings.

Response: We recognize the importance of providing a transparent and consumer-friendly shopping experience, and are modifying our proposal to allow Exchanges the flexibility to choose a reasonable allocation methodology. This policy would allow an Exchange to allocate the portion of the advance payment of the premium tax credit that is less than or equal to the aggregated adjusted monthly premiums for the QHP policies properly allocated to EHB among the QHPs using a per member approach. However, the Exchange must still allocate the remainder to the stand-

[24] We note that to simplify operations, even if a State establishes a uniform age rating curve as allowed under § 147.102(e), we will continue to use the default uniform age rating curve with a 3:1 ratio established by the Secretary of HHS for purposes of allocating advance payments of the premium tax credit.

alone dental plan(s), though this portion may also be allocated using a per member approach.

The approach that will be used by FFEs to allocate the advance payment of the premium tax credit will allow the FFE to display the amount of premium that a household would pay out-of-pocket for each plan during the shopping experience. In addition, the FFE approach approximates an allocation based on premiums (prioritizing the QHP policies).

Comment: We received several comments regarding the methodology proposed in § 155.340(e)(2). Commenters noted that because we proposed that advance payments of the premium tax credit(s) be allocated first to QHP policies, and any remainder be allocated to stand-alone dental policies, it is unlikely that advance payments of the premium tax credit(s) will be available to offset the cost of the stand-alone dental policies. One commenter stated that advance payments of the premium tax credit(s) should be allocated pro rata among QHP policies and stand-alone dental policies according to premium to assist families with purchasing pediatric dental coverage, which is one of the essential health benefits. Another commenter suggested that advance payments of the premium tax credit(s) should be allocated first to any stand-alone dental policy, and the remainder allocated to the QHP(s). A third commenter stated that the cost to issuers of stand-alone dental policies to develop a process to accept advance payments of the premium tax credit(s) on behalf of enrollees outweighs the potential benefit, and consequently, advance payments of the premium tax credit(s) should only be allocated to QHP policies.

Response: We believe that advance payments of the premium tax credit(s) should first be allocated to QHP policies, and any remainder should be allocated to stand-alone dental policies. This approach will ensure that the majority of the tax credit is allocated to the most costly portion of an individual's coverage. While we understand the burden on stand-alone dental plans of implementing a process to accept the advance payments of the premium tax credit, we believe that consumers should not be required to wait until tax filing in order to receive the full amount of their premium tax credit benefit.

We are finalizing paragraph (e) with the changes from the proposed rule noted above. The second provision we proposed to add to § 155.340 was paragraph (f), now relabeled as paragraph (g) in this final rule. The standards proposed in this paragraph are discussed below in section III.E.4.g.

2. Exchange Functions: Certification of Qualified Health Plans

We proposed to add § 155.1030 to set forth standards for Exchanges to ensure that QHPs in the individual market on the Exchange meet the requirements related to advance payments of the premium tax credit and cost-sharing reductions, as proposed in § 156.215 and described below. We proposed these standards under section 1311(c) of the Affordable Care Act, which provides for the Secretary to establish criteria for the certification of health plans as QHPs, as well as section 1321(a)(1), which provides general rulemaking authority for title I of the Affordable Care Act, including the establishment of programs for the provision of advance payments of the premium tax credit and cost-sharing reductions.

In § 155.1030(a)(1), we proposed that the Exchange ensure that each issuer that offers or seeks to offer a QHP in the individual market on the Exchange submit the required plan variations, as proposed in § 156.420, for each of its health plans proposed to be offered in the individual market on the Exchange and certify that the submitted plan variations meet the requirements of § 156.420. We expect that an Exchange would collect prior to each benefit year the information necessary to validate that the issuer meets the requirements for silver plan variations, as detailed in § 156.420(a), and collect for certification the information necessary to validate that the issuer meets the requirements for zero and limited cost sharing plan variations, as detailed in § 156.420(b). We proposed in § 155.1030(a)(2) that the Exchange provide the actuarial values of the QHPs and silver plan variations to HHS. As described in proposed § 156.430, HHS would use this information to determine the advance payments to QHP issuers for the value of the cost-sharing reductions.

In § 155.1030(b)(1), we proposed the Exchange collect and review certain information that an issuer must submit under § 156.470 that would allow for the calculation of the advance payments of cost-sharing reductions and the premium tax credit; in addition, the proposal would direct an Exchange to ensure that the allocations provided by the issuer are consistent with the standards identified in § 156.470(c)–(d). Specifically, in § 156.470(a), we proposed that an issuer provide to the Exchange annually for approval, for each metal level health plan (that is, a health plan at any of the four levels of coverage, as defined in § 156.20) offered, or proposed to be offered, in the individual market on the Exchange, an allocation of the rate and the expected allowed claims costs for the plan, in each case, to: (1) EHB, other than services described in § 156.280(d)(1),[25] and (2) any other services or benefits offered by the health plan not described in clause (1). In the preamble to the proposed rule, we explained that the rate allocation information would allow the Exchange to calculate the percentage of the rate attributable to EHB; this percentage could then be multiplied by the adjusted monthly premium, as defined by 26 CFR 1.36B–3(e), and the monthly premium of the QHP in which the taxpayer enrolls, to calculate the premium assistance amount. The allocation of the expected allowed claims costs would be used to validate the rate allocation, and to calculate the advance payments for cost-sharing reductions as described in § 156.430.

In § 156.470(e), we further proposed that an issuer of a metal level health plan offered, or proposed to be offered, in the individual market on the Exchange also submit to the Exchange annually for approval, an actuarial memorandum with a detailed description of the methods and specific bases used to perform the allocations. The Exchange and HHS would use this memorandum to verify that the allocations meet the standards proposed in § 156.470(c). First, the issuer must ensure that the allocation is performed by a member of the American Academy of Actuaries in accordance with generally accepted actuarial principles and methodologies. Second, the rate allocation should reasonably reflect the allocation of the expected allowed claims costs attributable to EHB (excluding those services described in § 156.280(d)(1)). Third, the allocation should be consistent with the allocation of State-required benefits to be submitted by the issuer as proposed and finalized in § 155.170(c) of the final EHB/AV Rule, and the allocation requirements described in § 156.280(e)(4) for certain services. Fourth, the issuer should calculate the allocation as if it were a premium under the fair health insurance premium standards described at § 147.102, the single risk pool standards described at § 156.80, and the same premium rate standards described at § 156.255. We proposed this standard because we

[25] 45 CFR 156.280(e)(1)(i) provides that if a QHP provides coverage of services described in paragraph (d)(1) of that section, the QHP issuer must not use Federal funds, including advance payments of the premium tax credit or cost-sharing reductions, to pay for the services.

believe the allocation of rates should be performed consistent with the standards applicable to the setting of rates.

In § 156.470(b), we proposed somewhat similar standards for the allocation of premiums for stand-alone dental plans. Specifically, we proposed that an issuer provide to the Exchange annually for approval, for each stand-alone dental plan offered, or proposed to be offered, in the individual market on the Exchange, a dollar allocation of the expected premium for the plan, to: (1) the pediatric dental essential health benefit, and (2) any benefits offered by the stand-alone dental plan that are not the pediatric essential health benefit. As described in 26 CFR 1.36B–3(k), this allocation will be used to determine the premium tax credit, and thus the advance payment of the premium tax credit, available if an individual enrolls in both a QHP and a stand-alone dental plan. We noted that unlike issuers of metal level health plans, issuers of stand-alone dental plans would be required to submit a dollar allocation of the expected premium for the plan. We specified this because, unlike QHPs, issuers of stand-alone dental plans are not required to finalize premiums prior to the start of the benefit year. However, § 156.470(b) as proposed and finalized here directs stand-alone dental plan issuers to finalize the dollar amount of the premium allocable to the pediatric dental essential health benefit prior to the start of the benefit year to allow for the calculation of advance payments of the premium tax credit.

In § 156.470(e), we also proposed that issuers of stand-alone dental plans submit to the Exchange annually for approval an actuarial memorandum with a detailed description of the methods and specific bases used to perform the allocations, demonstrating that the allocations meet the standards proposed in § 156.470(d). These standards were similar to those proposed for issuers of metal level health plans offered or proposed to be offered as QHPs, with some adaptations specific to stand-alone dental plans. Specifically, in § 156.470(d)(1) and (2) we proposed that the allocation be performed by a member of the American Academy of Actuaries in accordance with generally accepted actuarial principles and methodologies, and be consistent with the allocation applicable to State-required benefits to be submitted by the issuer under § 155.170(c). In addition, in § 156.470(d)(3), we proposed that the allocation be calculated as if it were a premium subject to the fair health insurance premium standards at § 147.102 and the single risk pool standards at § 156.80, as well as the same premium standard described at § 156.255. However, in § 156.470(d)(4) we provided a specific standard for age-adjustments to account for the fact that the dental essential health benefit only applies to the pediatric population. We also noted that issuers of stand-alone dental plans are not required to submit an allocation of their expected allowed claims costs because these plans are not eligible for cost-sharing reductions, as described in § 156.440(b).

In § 155.1030(b)(1), we proposed that the Exchange collect and review annually the rate or premium allocation, the expected allowed claims cost allocation, and the actuarial memorandum that an issuer submits, to ensure that such allocations meet the standards set forth in § 156.470(c) and (d). To ensure that the allocations are completed appropriately, we explained in the preamble to the proposed rule that we expect that the Exchange will review the allocation information in conjunction with the rate and benefit information that the issuer submits under § 156.210 as finalized in the Exchange Establishment Rule. In addition, an Exchange that coordinates its review of QHP rates and benefits with the State's Effective Rate Review program would be able to also coordinate the allocation review because the revised reporting requirements for issuers seeking to increase rates set forth in the Market Reform Rule at § 154.215(d)(3)–(4), and detailed in the accompanying PRA package, include the rate allocation and expected allowed claims cost allocation information. These reporting requirements will reduce the need for duplicate submissions by issuers and reviews by Exchanges. However, we noted that it is ultimately the responsibility of the Exchange to ensure that the issuer performs the allocations appropriately for each health plan or stand-alone dental plan that the issuer offers, or seeks to offer, on the individual market in the Exchange, including those that are not seeking to increase rates. Therefore, the preamble identified our expectation that Exchanges will collect the allocation information through either securing access to the data submission by QHP issuers for rate increases under § 154.215, or the QHP certification and annual submission process under parts 155 and 156, as appropriate.

In § 155.1030(b)(2), we proposed that the Exchange submit to HHS the approved allocation(s) and actuarial memorandum for each QHP and stand-alone dental plan. In paragraph (b)(4), we proposed authority for the use of this data by HHS for the approval of the estimates that issuers submit for advance payments of cost-sharing reductions described in § 156.430, and for the oversight of the advance payments of cost-sharing reductions and premium tax credit programs.

In § 155.1030(b)(3), we proposed that the Exchange collect annually any estimates and supporting documentation that a QHP issuer submits to receive advance payments for the value of the cost-sharing reductions under § 156.430(a). The Exchange would then submit the estimates and supporting documentation to HHS for review. We clarified further that the Exchange would not review these estimates, and HHS's review would simply ensure that the estimates were developed in a manner consistent with the methodology established by HHS in the preamble to § 156.430(a) of this final rule, in keeping with HHS's obligation to safeguard Federal funds.

We are finalizing the provisions in § 155.1030 as proposed, with technical corrections to § 155.1030(a) and (b)(2). We replace the phrase, ''The Exchange'' in the beginning of proposed § 155.1030(a) with ''An Exchange,'' to align with other provisions in part 155. We also replace the phrase ''[an issuer] offers or seeks to offer'' from the proposed rule with the phrase ''[an issuer] offers, or intends to offer'' in the final rule, to align with the language in § 156.430(a) requiring issuers to submit information for the advance payment of cost-sharing reductions; the scope of these regulatory requirements is intended to be the same. Similarly, we are making technical corrections to § 156.470(a), (b) and (e) to standardize the phrase describing the issuers who must comply with the rule as those issuers with plans ''offered, or intended to be offered'' on an Exchange.

We are also adding paragraph (c) to § 155.1030 and paragraph (f) to § 156.470 to clarify the application of these provisions to multi-State plans. Section 1334 of the Affordable Care Act directs OPM to enter into contracts with issuers to offer multi-State plans. Accordingly, OPM is responsible for ensuring that multi-State plans and their issuers comply with various Exchange standards, including standards relating to cost-sharing reductions and advance payments of the premium tax credit.

We are also finalizing the provisions proposed in § 156.470(a), (b), (c), (d)(1), and (e). To allow greater flexibility for stand-alone dental plan issuers in developing the allocation of dental premiums to EHB, we are not finalizing the allocation standards described in paragraphs (d)(2), (3), and (4) of the

proposed rule. We believe the allocation standard previously described in subparagraph (d)(1), which requires that the allocation be performed by a member of the American Academy of Actuaries in accordance with generally accepted actuarial principles and methodologies, is a sufficient standard for ensuring that stand-alone dental plan issuers allocate the premium accordingly. We intend to provide further details on the reporting process for stand-alone dental plan premium allocations for the FFE.

Comment: We received one comment in support of the provisions at § 155.1030 that all QHP issuers provide the plan variations as part of the certification process. We also received a comment requesting that HHS provide to issuers a good-faith compliance safe harbor on the new cost-sharing reductions standards and suggesting that this safe harbor could be revisited prior to the 2016 plan year.

Response: We will take the comment into consideration in future rulemaking on oversight functions.

Comment: In regard to § 156.470, we received a comment asking for one set of guidance on all actuarial data submissions required for QHP certification, rate review, and market stabilization. The commenter suggested that HHS develop a standard template for the annual actuarial memorandum with specific instructions on what data should be included in the actuarial memorandum. In addition, we received a specific comment asking for guidance on how issuers should allocate the cost of prescription drug essential health benefits.

Response: As discussed in the preamble of the proposed rule, we have attempted to streamline actuarial reporting requirements. In the Market Reform Rule, at § 154.215(d)(3)–(4), and detailed in the accompanying PRA package, we revised the reporting requirements for issuers seeking to increase rates to include the rate allocation and expected allowed claims cost allocation information that issuers of metal level health plans would submit to an Exchange under § 156.470(a) finalized here. We created a unified data template for the submission, as well as detailed instructions for completing the actuarial memorandum. We suggest that Exchanges require issuers not seeking rate increases, and stand-alone dental plan issuers who are not subject to the rate review program, to use similar reporting processes in order to submit the rate and claims cost allocation information to the Exchange under § 156.470 as finalized in this final rule.

In response to the specific comment asking for guidance on allocating the cost of prescription drug essential health benefits, we refer readers to § 156.122 of the final EHB/AV Rule, which specifies that for a plan to meet the EHB requirements, it must cover at least the greater of: (1) One drug in every category and class within the United States Pharmacopeia's (USP) classification system; or (2) the same number of drugs in each category and class as the EHB-benchmark plan. We do not specify a maximum number of drugs that a plan may cover. Therefore, when determining the claims costs for EHB, QHP issuers should include all prescription drug claims costs within the USP classification system, except for claims costs associated with drugs for services described in § 156.280(d)(1).

Comment: We received several comments relating to the provisions at § 156.470(b) and (d) on the allocation of premiums for stand-alone dental plans for purposes of calculating advance payments of the premium tax credit. One commenter stated that because stand-alone dental plans are exempt from the rating standards set forth in the final Market Reform Rule, issuers of stand-alone dental plans should not be required to follow such standards when determining the premium allocation. Another commenter supported the proposed policy because it provides equal treatment for the pediatric dental essential health benefit with other essential health benefits. However, the same commenter asked for clarification that this policy permits an issuer of a stand-alone dental plan to offer adult and family dental benefits through an Exchange so long as they are offered and priced separately. The commenter also asked for clarification of the definition of pediatric coverage and the standard proposed at § 156.470(d)(4), given that the final EHB/AV Rule specified that states may set alternative age limits for pediatric coverage.

Response: We agree that stand-alone dental plans, as defined at § 155.1065, are ''excepted benefits'' under section 2791(c) of the PHS Act, and clarify that issuers of stand-alone dental plans are not required to follow the rating standards set forth in the final Market Reform Rule for purposes of pricing stand-alone dental coverage. In addition, to allow greater flexibility in the implementation of the provisions in § 156.470 related to stand-alone dental plans, we are not finalizing the allocation standards proposed in paragraphs (d)(2), (3), and (4) of § 156.470. We believe the allocation standard proposed at § 156.470(d)(1), which requires that the allocation be performed by a member of the American Academy of Actuaries in accordance with generally accepted actuarial principles and methodologies, is a sufficient standard for ensuring that issuers allocate the premium accordingly, so we are finalizing that provision in this final rule. We intend to provide further details on the reporting process for stand-alone dental plan premium allocations for the FFE.

3. QHP Minimum Certification Standards Relating to Advance Payments of the Premium Tax Credit and Cost-Sharing Reductions

Under HHS's rulemaking authority under sections 1311(c)(1), 1321(a)(1), 1402 and 1412 of the Affordable Care Act, we proposed to add § 156.215. This section would amend the QHP minimum certification standards and specify that an issuer seeking to offer a health plan on the individual market in the Exchange meet the requirements described in subpart E of part 156 related to the administration of advance payments of the premium tax credit and cost-sharing reductions. We proposed to add this section to clarify that compliance with part 156 subpart E, including the standards and submission requirements proposed at § 156.420 and § 156.470, is a requirement of QHP certification, and therefore, is included in the standard described at § 155.1000(b), under which an Exchange must offer only health plans that meet the minimum certification requirements. Under our proposal, continuing compliance with subpart E requirements by QHPs and QHP issuers is a condition of certification; failure to comply with the requirements could result in decertification of the QHP as well as other enforcement actions. This corresponds to the proposed addition of § 155.1030, which sets forth the Exchange responsibilities on certification with respect to advance payments of the premium tax credit and cost-sharing reductions (described previously). We received no comments on this provision. For the reasons described in the proposed rule, we are finalizing these provisions as proposed.

4. Health Insurance Issuer Responsibilities With Respect to Advance Payments of the Premium Tax Credit and Cost-Sharing Reductions

a. Definitions

Under § 156.400, we proposed definitions for terms that are used throughout subpart E of part 156. These terms apply only to subpart E. Some of these definitions cross-reference definitions elsewhere in parts 155 or

156, including some definitions set forth in the final EHB/AV Rule; the terms ''advance payments of the premium tax credit'' and ''Affordable Care Act'' were proposed as defined by reference to § 155.20, and the term ''maximum annual limitation on cost sharing'' was proposed as defined by reference to § 156.130 of the final EHB/AV Rule. The terms ''Federal poverty level or FPL'' and ''Indian'' were proposed to be defined by reference to § 155.300(a). The term ''de minimis variation'' was proposed to be defined by reference to § 156.140(c)(1) of the final EHB/AV Rule. We also proposed to define ''stand-alone dental plan'' as a plan offered through an Exchange under § 155.1065.

We proposed to rely on the definitions of ''cost sharing'' and ''cost-sharing reductions'' from § 156.20. Finally, we noted in the preamble to the proposed rule that cost-sharing reductions are subject to § 156.280(e)(1)(ii) and do not apply to benefits that are not EHB.

Other definitions were proposed to effectuate the regulations proposed in subpart E. These definitions were described in detail in the proposed rule and listed below for reference:

- We proposed to define ''standard plan'' as a QHP offered at one of the four levels of coverage, defined at § 156.140, with an annual limitation on cost sharing that conforms to the requirements of § 156.130(a). A standard plan at the bronze, silver, gold, or platinum level of coverage is referred to as a standard bronze plan, a standard silver plan, a standard gold plan, and a standard platinum plan, respectively.
- We proposed to define ''silver plan variation'' as, with respect to a standard silver plan, any of the variations of that standard silver plan described in § 156.420(a).
- We proposed to define ''zero cost sharing plan variation'' as, with respect to a QHP at any level of coverage, the variation of such QHP described in § 156.420(b)(1), which provides for the elimination of cost sharing for Indians based on household income level.
- We proposed to define ''limited cost sharing variation'' as, with respect to a QHP at any level of coverage, the variation of such QHP described in § 156.420(b)(2), which provides for the prohibition on cost sharing applicable to the receipt of benefits from IHS or certain other providers, irrespective of income level.
- We proposed to define ''plan variation'' as a zero cost sharing plan variation, limited cost sharing plan variation, or silver plan variation. We emphasized that the plan variations of a QHP are not separate plans, but variations in how the cost sharing required under the QHP is to be shared between the enrollee(s) and the Federal government.

We proposed these definitions to administer and implement the cost-sharing reductions established under section 1402 of the Affordable Care Act. Although an issuer will only offer one actual QHP (for example, a standard silver plan) with one standard cost-sharing structure, we proposed the concept of plan variations to describe how certain eligible individuals will pay only a portion of the total cost sharing required under that QHP, with the Federal government bearing the remaining cost-sharing obligations under section 1402 of the Affordable Care Act.

To reflect how the Affordable Care Act creates different eligibility categories with different associated cost-sharing reductions, we proposed that each plan variation would reflect the enrollee's portion of the cost sharing requirements for the QHP. We referred to ''assigning'' enrollees to the applicable plan variation to describe how the enrollees will receive the benefits described in section 1402 of the Affordable Care Act. We reiterated that these variations are not different QHPs and that a change in eligibility for cost-sharing reductions simply changes the enrollee's responsibility for part of the total cost sharing under the same QHP.

In addition, we also proposed to define ''de minimis variation for a silver plan variation'' as a single percentage point. That is, we proposed that a 1 percentage point variation in the AV of a silver plan variation would not result in a material difference in the true dollar value of the silver plan variation. We noted that this proposal differed from the 2 percentage point de minimis variation standard for health plans finalized in § 156.140(c) of the final EHB/AV Rule.

We proposed to define ''most generous'' or ''more generous'' as, between a QHP (including a standard silver plan) or plan variation and one or more other plan variations of the same QHP, the QHP or plan variation designed for the category of individuals last listed in § 155.305(g)(3).

We proposed to define the ''annual limitation on cost sharing'' as the annual dollar limit on cost sharing required to be paid by an enrollee that is established by a particular QHP. We noted that this definition refers to the plan-specific cost-sharing parameters, while the defined term ''maximum annual limitation on cost sharing'' was proposed to refer to the uniform maximum that would apply to all QHPs (other than QHPs with cost-sharing reductions) for a particular year under standards at § 156.130. Finally, we proposed to define the ''reduced maximum annual limitation on cost sharing'' as the dollar value of the maximum annual limitation on cost sharing for a silver plan variation that remains after applying the reduction in the maximum annual limitation on cost sharing required by section 1402 of the Affordable Care Act, as announced in the annual HHS notice of benefit and payment parameters. The reduced maximum annual limitation on cost sharing for each silver plan variation for 2014 was proposed in the preamble for § 156.420 of this Payment Notice. The reduced maximum annual limitation applies, as does the maximum annual limitation, only with respect to cost sharing on EHB, and does not apply to cost sharing on services provided by out-of-network providers. *See* § 156.20 (defining cost sharing) and § 156.130(c).

We are finalizing these provisions, with the following modification: we are amending the reference for the definition of the term ''de minimis variation'' to § 156.140(c) instead of § 156.140(c)(1), in alignment with the final EHB/AV rule. The reduced maximum limitation on cost sharing for each silver plan variation is finalized in section III.E.4.c. below.

Comment: Several commenters recommended that the de minimis variation for silver plan variations be increased to +/-2 percent as proposed in the AV/CSR Bulletin and proposed for standard plans under the final EHB/AV rule. Other commenters supported the +/-1 percent de minimis variation for silver plan variations.

Response: We believe that a narrower de minimis variation for plan variations prevents differences in cost sharing between plan variations and ensures that low- and moderate-income enrollees receive the cost-sharing reductions for which they are eligible. We believe that because cost-sharing reductions are reimbursed by the Federal government, the degree of flexibility afforded to issuers of silver plan variations in their cost-sharing design should be somewhat less. With this standard, we seek to balance the need to ensure that individuals receive the full value of the cost-sharing reductions for which they are eligible, and issuers' ability to set reasonable cost-sharing requirements.

Comment: One commenter suggested we define ''de minimis'' variation to mean the allowable variation in the AV of a health plan such that the proportion

of EHB paid by the health plan is within the range established in § 156.140(c).

Response: The definition of de minimis variation is incorporated by reference to § 156.140(c) of the final EHB/AV rule. We do not believe that a separate definition of the term ''de minimis'' itself for the purpose of plan variations is warranted.

Comment: We received a number of comments requesting that cost-sharing reductions be limited to in-network services. One commenter opposed excluding out-of-network services from counting towards the annual limitation on cost sharing.

Response: As provided in § 156.130(c) of the final EHB/AV rule, in the case of a plan using a network of providers, cost sharing for services provided out of network do not count toward the annual limitation on cost sharing. We reference this definition and we note that cost-sharing requirements for out-of-networks services will similarly not count towards a reduced annual limitation on cost sharing. We note, however, that section 1402(c)(2) of the Affordable Care Act does not specify how any additional reductions should be achieved for individuals eligible for cost-sharing reductions. We therefore clarify that in developing silver plan variations, issuers have the flexibility to reduce cost sharing only for in-network services as long as the required AV levels are achieved and the plan design does not violate the standards set forth in §§ 156.420(c)–(f).

b. Cost-Sharing Reductions for Enrollees

In § 156.410(a), we proposed that a QHP issuer must ensure that an individual eligible for cost-sharing reductions, as demonstrated by assignment to a particular plan variation, pay only the cost sharing required of an eligible individual for the applicable covered service under a plan variation. We also proposed in this paragraph that the enrollee receive this reduction in cost sharing when the cost sharing is collected, which might occur when the enrollee visits the emergency room for care. This proposal would apply to all forms of cost sharing, including copayments, coinsurance, and deductibles. Under our proposal, the QHP issuer would ensure that the enrollee is not charged any type of cost sharing after the applicable annual limitation on cost sharing has been met. Furthermore, we explained in the preamble that for services subject to cost sharing, an individual eligible for cost-sharing reductions would not be eligible for a reduced copayment or coinsurance rate until any applicable (potentially reduced) deductible has been paid. For the reasons described in the proposed rule and considering the comments received, we are finalizing these provisions as proposed.

Comment: Several commenters supported this policy. One commenter was concerned that the reduced deductible must be applied before an enrollee becomes eligible for the cost-sharing reductions. Another commenter was concerned there could be confusion among providers about the amount of cost sharing to collect and suggested that HHS require QHP issuers to issue membership cards to enrollees that clearly explain the enrollee's cost-sharing obligations.

Response: We believe it is appropriate for enrollees eligible for cost-sharing reductions to continue to be required to pay any applicable deductibles before taking advantage of other cost-sharing reductions. We recognize that QHP issuers will be required to supply providers with the necessary cost-sharing information to meet the obligation under § 156.410(a) of this final rule to ensure that the cost-sharing reductions are provided when the cost sharing is collected.

In § 156.410(b), we proposed that after a qualified individual makes a plan selection, a QHP issuer would assign the individual to the applicable plan variation based on the eligibility determination sent to the QHP issuer by the Exchange. We noted in preamble that the QHP issuer is entitled to rely upon the eligibility determination sent to the QHP issuer by the Exchange.

In § 156.410(b)(1), we proposed that a QHP issuer assign a qualified individual who chooses to enroll in a silver plan in the individual market in the Exchange to the silver plan variation for which the qualified individual is eligible. Comments on § 156.410(b)(2) and (3) are discussed below in the section of this final rule related to the special cost-sharing reduction rules for Indians. In § 156.410(b)(4), we proposed that a QHP issuer must assign an individual determined ineligible by the Exchange for cost-sharing reductions to the selected QHP with no cost-sharing reductions. We are finalizing these provisions without modification.

Comment: Commenters generally supported requiring QHP issuers to assign enrollees to the plan variation for which they are eligible. One commenter specifically suggested that Exchanges only display the plan variation of each QHP for which the consumer is eligible to avoid confusion.

Response: The standards set forth in § 156.420 ensure that consumers will be best served by being assigned to the most generous plan variation for which they are eligible. Therefore, we encourage Exchanges to only display the variation of each QHP plan for which the consumer is eligible. As noted in the proposed rule, if an individual does not wish to receive cost-sharing reductions, the individual may elect to decline to apply for cost-sharing reductions.

c. Plan Variations

In § 156.420, we proposed that issuers submit to the Exchange for certification and approval the variations of the health plans that they seek to offer or continue to offer in the individual market on the Exchange as QHPs that include required levels of cost-sharing reductions. We further clarified that under our proposal, multi-State plans, as defined in § 155.1000(a), and CO–OP QHPs, as defined in § 156.505, would be subject to the provisions of this subpart. OPM will certify the plan variations of the multi-State plans and determine the time and manner for submission.

Sections 1402(a) through (c) of the Affordable Care Act direct issuers to reduce cost sharing for EHB for eligible insureds enrolled in a silver health plan with household incomes between 100 and 400 percent of the FPL, such that the plan's share (before any reimbursement from HHS for cost-sharing reductions) of the total allowed costs of the benefits are a certain percentage (that is, the health plan meets a certain AV level). To achieve these AV levels, the law directs issuers to first reduce the maximum annual limitation on cost sharing. After the issuer reduces the annual limitation on cost sharing to comply with the applicable reduced maximum annual limitation, section 1402(c)(2) of the Affordable Care Act directs the Secretary to establish procedures under which an issuer is to further reduce cost sharing if necessary to achieve the specified AV levels.

For individuals with household incomes of 250 to 400 percent of the FPL, we noted that without any change in other forms of cost sharing, any reduction in the maximum annual limitation on cost sharing will cause an increase in AV. Therefore, we proposed not to reduce the maximum annual limitation on cost sharing for individuals with household incomes between 250 and 400 percent of the FPL. We are finalizing this policy as proposed, with the following modifications. We are adding a new paragraph (g) to clarify that OPM, rather than the Exchange, will determine the time and manner for multi-State plans to submit silver plan variations and zero and limited cost sharing plan variations for the purpose of certification.

Additionally, we note a technical correction with regard to the submission of plan variations under § 156.420(a); we replace the phrase ''[an issuer] seeks to offer or to continue to offer'' with the phrase ''[an issuer] offers, or intends to offer,'' to align with the language in § 156.430(a).

Comment: Two commenters recommended that HHS require plans to provide individuals with incomes between 250 percent and 400 percent of FPL the option of enrolling in a plan variation with a lower annual limitation on cost sharing and higher deductibles, copayments, and coinsurance in order to reach the statutorily required AV. Another commenter recommended that HHS rebate excess cost sharing for individuals between 250 percent and 400 percent of the FPL or work with IRS to issue a tax credit.

Response: As noted in the proposed rule, a reduction in the maximum annual limitation on cost sharing could require corresponding increases in other forms of cost sharing to maintain the statutorily required AV levels for individuals between 250–400 percent of FPL. Since we anticipate that most individuals would not be expected to reach the annual limitation on cost sharing, most individuals would be required to pay more up-front costs under such a cost-sharing structure. Furthermore, given the additional administrative burden required in designing and operating additional silver plan variations, we do not modify the proposed policy in this final rule. In addition, we do not believe we have the authority to provide individuals in this income range with an additional tax credit (beyond that provided for in sections 1401 and 1411 of the Affordable Care Act and section 36B of the Code).

For individuals with a household income of 100 to 250 percent of the FPL, we proposed an annual three-step process for the design of cost-sharing structures in the silver plan variations, as follows:

Step 1. In the first step, we identify in the annual HHS notice of benefit and payment parameters the maximum annual limitation on cost sharing applicable to all plans that will offer the EHB package.

Maximum Annual Limitation on Cost Sharing for Benefit Year 2014: As discussed in § 156.130(a) of the final EHB/AV Rule, the maximum annual limitation on cost sharing for 2014 is the dollar limit on cost sharing for high deductible health plans set by the IRS under section 223(c)(2)(A)(ii) of the Code for 2014. The IRS will publish this dollar limit in the spring of 2013. However, to allow time for HHS to analyze the impact of the reductions in the maximum annual limitation on cost sharing on health plan AV levels, and to allow issuers adequate time to develop the cost-sharing structures of their silver plan variations for submission during the QHP certification process, we proposed to estimate the dollar limit for 2014. Based on the proposed methodology, we estimated that the maximum annual limitation on cost sharing for self-only coverage for 2014 will be approximately $6,400 (the maximum annual limitation on cost sharing for other than self-only coverage for 2014 would be twice that amount, or $12,800).[26] This estimate was developed and proposed for purposes of setting the reduced maximum annual limitation on cost sharing for silver plan variations. Under section 1302(c)(1)(A) of the Affordable Care Act, cost sharing incurred under plans offering EHB packages, as defined in § 156.20, in 2014 cannot exceed the limit set by the IRS under section 223(c)(2)(A)(ii)(I) and (II) of the Code for the 2014 plan year. For a benefit year beginning after 2014, the maximum annual limitation on cost sharing will equal the dollar limit for 2014 benefit year adjusted by a premium adjustment percentage determined by HHS, under section 1302(c)(4) of the Affordable Care Act. We plan to propose the premium adjustment percentage applicable to the 2015 benefit year in the next HHS notice of benefit and payment parameters.

Step 2. In the second step, we analyze the effect on AV of the reductions in the maximum annual limitation on cost sharing described in section 1402(c)(1)(A) of the Affordable Care Act. Under section 1402(c)(1)(B)(ii), we may adjust the reduction in the maximum annual limitation on cost sharing, if necessary, to ensure that the actuarial values of the applicable silver plan variations do not exceed the actuarial values specified in section 1402(c)(1)(B)(i). We proposed to describe these analyses and the reduced annual limitations on cost sharing for the three income categories in the annual HHS notice of benefit and payment parameters.

Reduced Maximum Annual Limitation on Cost Sharing for Benefit Year 2014.

As described in the proposed rule, for the 2014 benefit year, we analyzed the impact on the actuarial values of three model silver level QHPs of the reductions described in the Affordable Care Act to the estimated maximum annual limitation on cost sharing for self-only coverage for 2014 ($6,400). These model plans were meant to represent the broad sets of plan designs that we expect issuers to offer at the silver level of coverage through an Exchange. All three model plans meet the actuarial value requirements for silver health plans, and start with an annual limitation on cost sharing equal to the estimated maximum annual limitation on cost sharing ($6,400). The plan design features of the model QHPs were entered into the AV calculator developed by HHS.

As described in the preamble to the proposed rule, we determined that a reduction in the maximum annual limitation on cost sharing specified in the Affordable Care Act for enrollees with household incomes between 100 and 150 percent of the FPL (⅔ reduction), and 150 and 200 percent of the FPL (⅔ reduction), would not cause the AVs of any of the model QHPs to exceed the statutorily specified AV levels (94 and 87, respectively). In contrast, the reduction in the maximum annual limitation on cost sharing specified in the Affordable Care Act for enrollees with household incomes between 200 and 250 percent of FPL (½ reduction), did cause the AVs of the model QHPs to exceed the specified AV level of 73 percent. As a result, we proposed that QHP issuers only be required to reduce their annual limitation on cost sharing for enrollees in the 2014 benefit year with household incomes between 200 and 250 percent of FPL by approximately ⅕, rather than ½. We further proposed to moderate the reductions in the maximum annual limitation on cost sharing for all three income categories, as shown in Table 21, to account for any potential inaccuracies in our estimate of the maximum annual limitation on cost sharing for 2014, and unique plan designs that may not be captured by our three model QHPs. Based on this analysis, in Table 21, we proposed the following reduced maximum annual limitations on cost sharing for benefit year 2014:

[26] The methodology is discussed in detail at 77 FR 73171–73172 of the proposed rule.

TABLE 21—REDUCTIONS IN MAXIMUM ANNUAL LIMITATION ON COST SHARING FOR 2014

Eligibility category	Reduced maximum annual limitation on cost sharing for self-only coverage for 2014	Reduced maximum annual limitation on cost sharing for other than self-only coverage for 2014
Individuals eligible for cost-sharing reductions under § 155.305(g)(2)(i) (that is, 100–150 percent of FPL)	$2,250	$4,500
Individuals eligible for cost-sharing reductions under § 155.305(g)(2)(ii) (that is, 150–200 percent of FPL)	2,250	4,500
Individuals eligible for cost-sharing reductions under § 155.305(g)(2)(iii) (that is, 200–250 percent of FPL)	5,200	10,400

We proposed that QHP issuers may rely on the reduced maximum annual limitations on cost sharing published in the final HHS notice of benefit and payment parameters to develop their silver plan variations for the 2014 benefit year.

Step 3. In the proposed third step of the process for structuring cost sharing in the silver plan variations, a QHP issuer offering coverage in the individual market on an Exchange would be required to develop three variations of its standard silver plan—one each for individuals with household incomes between 100 and 150 percent of the FPL, 150 and 200 percent of the FPL, and 200 and 250 percent of the FPL—with each variation having an annual limitation on cost sharing that does not exceed the applicable reduced maximum annual limitation on cost sharing published in the annual HHS notice of benefit and payment parameters. If the application of the reduced annual limitation on cost sharing results in an AV for a particular silver plan variation that differs from the required 73, 87, or 94 percent AV level by more than the permitted amount (that is, the 1 percent de minimis amount for silver plan variations, subject to § 156.420(f), as described below), the QHP issuer would adjust the cost-sharing structure in that silver plan variation to achieve the applicable AV level.

We proposed specifications in § 156.420(a)(1) through (3) for the three silver plan variations, and proposed that they may deviate from the required AV levels by the de minimis variation for silver plan variations that is, 1 percentage point. We further proposed that issuers submit these silver plan variations annually to the Exchange for certification, prior to the benefit year. Under our proposal, silver plan variations would be approved annually even if the standard silver plan does not change, since the reduced maximum annual limitation on cost sharing may change annually due to the premium adjustment percentage. For the reasons described in the proposed rule and considering the comments received and discussed below, we are finalizing these provisions, including the reductions in the maximum limitation on cost sharing for silver plan variations offered in the 2014, as proposed with certain clarifications.

Comment: One commenter noted that the IRS does not release the dollar limit on cost sharing until late spring and this would be too late for issuers to adjust their product designs to be compliant with the IRS limit and also meet State and Federal filing deadlines. The commenter suggested that HHS develop an estimate of the maximum annual limit on cost sharing that can be used as a safe harbor.

Response: We are finalizing the proposal to permit QHP issuers to rely on the reduced maximum annual limitations on cost sharing published in the final HHS notice of benefit and payment parameters to develop their silver plan variations for the 2014 benefit year. We plan to provide separate guidance on the maximum annual limitation on cost sharing for standard plans to QHP issuers seeking to participate in a Federally-facilitated Exchange consistent with the approach finalized in this Payment Notice.

Comment: One commenter recommended that the maximum annual limitation on cost sharing should be published no later than July 1 of the year prior to open enrollment, with a 45-day comment period.

Response: We understand the need for issuers and stakeholders to have adequate time to consider how the maximum annual limitation on cost-sharing should be applied in the development of plan variations. We note that in later benefit years, the maximum annual limitation on cost sharing will be established under a premium adjustment percentage established by HHS in the annual notice of benefit and payment parameters for the applicable plan year.

Comment: One commenter suggested that HHS should not adjust the reductions in the maximum annual limitation on cost sharing, as these adjustments could affect other cost-sharing requirements that a State-based Exchange might put in place under its authority to develop certification standards, as described at § 155.1000(c)(2).

Response: We believe it is important to make these adjustments to ensure that issuers have flexibility when developing their plan designs. Without these adjustments, it could be difficult for issuers to achieve the required actuarial value levels for certain plan variations, while complying with other applicable rules on cost-sharing structures, such as the provision at § 156.420(e). Additionally, we anticipate working with States and Exchanges individually to address the interaction between the standards in the Payment Notice and any additional Exchange-specific certification standards.

Comment: One commenter suggested that when silver plan variations cannot be accommodated by the AV calculator, HHS should require that the AV determinations be certified by a member of the American Academy of Actuaries.

Response: We clarify that the definition of and standards for determining actuarial value in § 156.20 and § 156.135 of the final EHB/AV Rule apply to both standard plans and plan variations. Accordingly, if a health plan's design for plan variation is not compatible with the AV calculator, the issuer would be required to follow the processes specified in § 156.135(b) of the final EHB/AV Rule.

Comment: One commenter requested that HHS clarify which ''desired metal tier'' should be inputted into the AV calculator to determine the AV for the silver plan variations.

Response: We have designed the AV Calculator such that users may select the option to determine whether the plan design satisfies the plan variations standards finalized here. To use the AV Calculator to verify the AV of a plan variation, users should select the indicator that the plan meets the cost-

sharing reduction standard, and select the desired metal tier. In the below table, we provide guidance on which metal tier should be chosen to align with the expected utilization for each plan variation. Additional information on the AV Calculator can be found at *http://cciio.cms.gov/resources/regulations/index.html#pm.*

TABLE 22—DESIRED METAL TIER FOR SILVER PLAN VARIATION AV

Household income	Silver plan variation AV	Desired metal tier
100–150 percent of FPL	Plan Variation 94 percent	Platinum.
150–200 percent of FPL	Plan Variation 87 percent	Gold.
200–250 percent of FPL	Plan Variation 73 percent	Silver.

Comment: One commenter asked HHS to clarify how silver plan variations could be designed to be compatible with HSAs.

Response: We are considering this issue and will provide future guidance.

Comment: One commenter asked if HHS could make public its modeling regarding the expected rate of change in cost-sharing reduction eligibility within a plan year.

Response: HHS does not have such an analysis to share at this time.

Comment: Another commenter was concerned about the ability of States to supplement cost-sharing reductions under the proposed policy, and requested HHS give States that wish to supplement cost sharing the flexibility to determine whether issuers must offer all plan variations.

Response: We intend to work with States to assess how the requirements regarding plan variations would interact with any supplemental cost-sharing reductions a State intends to provide.

Comment: Several commenters recommended that HHS establish parameters for deductibles in silver plan variations. One commenter suggested that cost-sharing reductions to reach the required AV levels identified in § 156.420(a) should first be used to lower the deductible and then reduce coinsurance or copayments, and that enrollees should receive negotiated pharmacy prices during the deductible phase. The same commenter suggested waiving or reducing the deductible for outpatient pharmacy for individuals eligible for cost-sharing reductions and making cost-sharing reductions in the forms of lower coinsurance and copayments available to enrollees assigned to plan variations immediately. One commenter asked for allowances to be made to permit issuers to develop innovative plan designs.

Response: We believe that the standards we are finalizing strike the appropriate balance between protecting consumers and preserving QHP issuer flexibility. The standard in § 156.420(e) that cost sharing for a silver plan variation not exceed the corresponding cost sharing for a standard silver plan or silver plan variation with a lower AV protects low-income populations who are assigned to plan variations. We also clarify that, for purposes of the plan variations, any cost sharing that an enrollee would have been required to pay under the standard plan, but was not required to pay under the plan variation, should not be applied to the annual limitation on cost sharing.

Comment: Several commenters sought clarification on whether issuers must submit a silver plan variation for every plan offered on the individual market.

Response: We clarify that for each silver health plan that an issuer offers, or intends to offer in the individual market on an Exchange, the issuer must submit the three silver plan variations. This policy will ensure that low-income individuals can receive cost-sharing reductions while enrolled in any silver level QHP offered through the Exchange, consistent with section 1402 of the Affordable Care Act.

Sections 156.420(b) and (d) are discussed below in section III.E.4.i. related to the special cost-sharing reduction rules for Indians.

In § 156.420(c) and (e), we proposed additional coverage standards for silver plan variations as part of implementing section 1402. In § 156.420(c), we proposed that silver plan variations cover the same benefits and include the same providers as the standard silver plan. We further proposed that silver plan variations must require the same out-of-pocket spending for benefits other than EHB. Lastly, we proposed that silver plan variations be subject to all requirements applicable to the standard silver plan (except for the requirement that the plan have an AV as set forth in § 156.140(b)(2) of the final EHB/AV Rule). This means, for example, that silver plan variations must meet standards relating to marketing and benefit design of QHPs, network adequacy standards, and essential community providers. Although these requirements are implicit because a plan variation is not a separate plan, we proposed these requirements explicitly as regulatory standards to ensure that QHP issuers develop appropriate plan variations.

In § 156.420(e), we proposed a standard to govern the design of cost-sharing structures for silver plan variations. Under this approach, the cost sharing for enrollees under any silver plan variation for an EHB from a provider may not exceed the corresponding cost sharing in the standard silver plan or any other silver plan variation of the standard silver plan with a lower AV. This proposed standard would apply to all types of cost-sharing reductions, including reductions to deductibles, coinsurance, and co-payments. An issuer would have the flexibility to vary cost sharing on particular benefits or providers so long as that cost sharing did not increase for a particular benefit or provider in higher AV silver plan variations. For the reasons described in the proposed rule and considering the comments received, we are finalizing these provisions in paragraphs (c) and (e) as proposed.

Comment: A number of commenters supported the requirement that silver plan variations cover the same benefits and include the same providers as the standard silver plan. Several commenters also generally supported the proposal that the cost sharing for enrollees under any silver plan variation for an EHB from a provider may not exceed the corresponding cost sharing in the standard silver plan or any other silver plan variation of the standard silver plan with a lower AV. One commenter supported allowing QHP issuers to have greater flexibility to vary cost-sharing structures across plan variations, and asked for clarification on whether QHP issuers can continue to use medical management policies for silver plan variations. Another commenter asked whether issuers may switch between copayments and coinsurance for silver plan variations as long as the cost sharing in aggregate does not exceed that of plans with lower actuarial values.

Response: We are finalizing the policy as proposed at § 156.420(e). We intend

to interpret and enforce this provision such that a QHP issuer may not switch between copayments and coinsurance for silver plan variations for the same benefit. We believe that allowing this type of substitution could result in an enrollee being subject to greater cost sharing under a plan variation with a higher AV, which § 156.420(e) is intended to prohibit. However, this provision does not limit an issuer's ability to appropriately use reasonable medical management techniques in managing costs consistently in its silver plan variations. We also direct the commenter's attention to § 156.125(c) of the final EHB/AV Rule, which codifies this protection in connection with anti-discrimination requirements, and section 1563(d) of the Affordable Care Act.

In § 156.420(f), we proposed that, notwithstanding the permitted de minimis variation in AV for a health plan or the permitted de minimis variation for a silver plan variation, the AV of the standard silver plan (which must be 70 percent plus or minus 2 percentage points) and the AV of the silver plan variation applicable to individuals with household incomes between 200 and 250 percent of the FPL (which must be 73 percent plus or minus 1 percentage point) must differ by at least 2 percentage points. We are finalizing the provision as proposed.

Comment: Several commenters supported this requirement. Another commenter was concerned about the ability of issuers to create a viable 73 percent plan variation given the number of plan design constraints.

Response: We believe that a 2 percentage point differential will ensure that a difference in cost-sharing reductions provided to each income category is maintained, while providing issuers the flexibility to adjust cost-sharing requirements within these standards.

d. Changes in Eligibility for Cost-Sharing Reductions

In § 156.425(a), we proposed that if the Exchange notifies a QHP issuer of a change in an enrollee's eligibility for cost-sharing reductions (including a change following which the enrollee will not be eligible for cost-sharing reductions), then the QHP issuer must change the individual's assignment so that the individual is assigned to the applicable standard plan or plan variation. We also proposed that the QHP issuer effectuate the change in eligibility in accordance with the effective date of eligibility provided by the Exchange. We explained in preamble that an Exchange would establish such dates under § 155.330(f). We noted that if an enrollee changes QHPs after the effective date of the eligibility change as the result of a special enrollment period, once the Exchange notifies the issuer of the new QHP of the enrollment, that QHP issuer must assign the enrollee to the applicable standard plan or plan variation of the QHP selected by the enrollee, consistent with § 156.410(b). We are finalizing these provisions as proposed.

Comment: Commenters generally supported the policy, but several stated that a change in an enrollee's eligibility for cost-sharing reductions should only be applied prospectively. One commenter requested that HHS clarify that cost-sharing reductions would not be available until the first day of the following month, to eliminate the need to re-adjudicate claims. Another commenter suggested that if retroactive changes in eligibility for cost-sharing reductions are permitted, only claims the issuer receives after the effective date of the new assignment should be processed under the new cost-sharing requirements.

Response: We are finalizing the policy as proposed. This policy aligns with the eligibility standards and effective dates proposed for the amendment at § 155.330(f) of the proposed Medicaid and Exchange Eligibility Appeals and Notices Rule, which aim to reduce the need for retroactive eligibility changes for cost-sharing reductions, except in certain limited scenarios, discussed in that rule.

Comment: One commenter recommended that HHS ensure that individuals who are not assigned to the applicable plan variation in a timely manner should be refunded any cost sharing they should not have been responsible for after the effective date of the eligibility change.

Response: We believe that it is important that eligible individuals receive the appropriate cost-sharing reductions as of the effective date required by the Exchange. As noted in the proposed rule, an individual would not be penalized based on changes in eligibility for cost-sharing reductions during the benefit year, although he or she would be ineligible for any refund on cost sharing to the extent the newly applicable deductible or annual limitation on cost sharing is exceeded by prior cost sharing.

Comment: We received a comment seeking clarification that the QHP issuer be held harmless for any cost-sharing reductions provided beyond the enrollee's actual eligibility level so long as the QHP issuer makes assignments and reassignments in accordance with Exchange instructions.

Response: We reiterate that our final rule requires a QHP issuer to follow the eligibility instructions from an Exchange in ensuring the provision of cost-sharing reductions and plan variation assignments under § 156.410(a) and § 156.425. Therefore, a QHP issuer may rely upon the eligibility determination sent by the Exchange. If a QHP issuer does not receive notification of an eligibility redetermination, the QHP issuer would not be permitted to re-assign the enrollee to a different plan variation or standard plan.

In § 156.425(b), we proposed that in the case of a change in assignment to a different plan variation (or standard plan without cost-sharing reductions) of the same QHP in the course of a benefit year (including in the case of a re-enrollment into the QHP following enrollment in a different plan), the QHP issuer must ensure that any cost sharing paid by the applicable individuals under the previous plan variations (or standard plan without cost-sharing reductions) is accounted for in the calculation of deductibles and annual limitations on cost sharing in the individual's newly assigned plan variation (or standard plan without cost sharing) for the remainder of the benefit year. As discussed above, we noted in the preamble that a change from or to an individual or family policy of a QHP due to the addition or removal of a family member does not constitute a change in plan for the family members originally on the individual or family policy. We are finalizing these provisions as proposed.

Comment: One commenter suggested that enrollees not be permitted to switch QHPs as a result of a mid-year change in eligibility for cost-sharing reductions, because an enrollee could mistakenly forfeit credit for previously paid cost sharing. Another commenter suggested that Exchanges be required to explain to consumers the policy relating to continuity of deductibles and annual limitations on cost sharing and the implications of switching QHPs mid-year.

Response: Prohibiting enrollees from switching QHPs would conflict with § 155.420(d)(6) of the Exchange Establishment Rule, which allows an individual who has a change in eligibility for cost-sharing reductions to enroll in or change from one QHP to another during a special enrollment period. We note that enrollees may choose a plan variation of the same QHP in order to ensure that any cost sharing previously paid by the individual is

taken into account. We encourage Exchanges to provide information to consumers on this topic.

Comment: One commenter asked HHS to consider instituting safe harbors if the enrollee already met the annual limit on cost sharing, but due to lags in data the QHP is not informed.

Response: We appreciate the difficulties caused by lags in data, and anticipate consulting with stakeholders to provide guidance on these sorts of operational issues.

Comment: One commenter requested an example to illustrate whether an individual will be required to satisfy the additional deductible amount when moving to a plan with a higher deductible. Another commenter recommended that deductible amounts carried forward to a policy with a lower deductible be counted towards the annual limitation on cost sharing.

Response: In accordance with the rule finalized here at § 156.425(b), as long as the change of assignment is to a different plan variation of the same QHP, any cost sharing paid by the applicable individual under the previous plan variation must be taken into account. This requirement would also apply to Indians who change plan variations within the same QHP as a result of a change in income, such as an Indian who moves from a limited cost sharing plan variation to a zero cost sharing plan variation, and then returns to the limited cost sharing plan variation of the same QHP.

Furthermore, as noted in the proposed rule, an individual eligible for cost-sharing reductions would not be eligible for a reduced copayment or coinsurance until the applicable deductible has been met. For example, if the individual satisfies a $500 deductible and pays $100 in co-payments in one plan variation, then moves to a different plan variation of the same QHP with a $750 deductible as a result of a change in eligibility, the plan would apply $600 towards the new deductible and the individual would need to satisfy the remaining $150 of the new deductible to be eligible for the reduced co-payment or coinsurance. Conversely, if an enrollee satisfies a $900 deductible in a standard plan and then moves to a plan variation of the same QHP with a $750 deductible as a result of a change in eligibility, the additional $150 the individual already paid must be applied towards the reduced annual limitation on cost sharing of the new plan variation. However, as we explained in connection with this proposal, the enrollee would not receive a rebate for the amount already paid above the deductible for the new plan variation.

Comment: One commenter sought clarification on how the requirements for continuity of deductibles and the annual limitation on cost sharing would apply if a QHP enrollee becomes eligible for Medicaid, and then later, re-enrolls in the QHP. The same commenter asked how the policy would apply if the individual switches to a different QHP.

Response: As noted in the proposed rule, the requirement regarding the continuity of deductibles and out-of-pocket maximums would apply as long as the change in assignment is to a different plan variation of the same QHP. We interpret this to include re-enrollment into the QHP following enrollment in a different QHP or another type of coverage such as Medicaid within the coverage year. As we also noted in the proposed rule, the QHP issuer is not prohibited from or required to extend the continuity of deductibles and annual limitations on cost sharing policy to situations in which the individual changes QHPs, but is *permitted* to extend this policy, provided that this extension of the policy is applied across all enrollees in a uniform manner.

Comment: One commenter sought clarification on how the proposed policy will affect the reconciliation of advance payments of cost-sharing reductions with actual payments.

Response: Under the reconciliation policy finalized in this rule, cost-sharing reductions properly provided in accordance with this rule will be reimbursed. Thus, if an enrollee changes plan variations mid-year and is properly credited with amounts previously accumulated towards a deductible, then cost-sharing reductions on copayments and coinsurance that are provided because the deductible under the new plan variation is reached more quickly are reimbursable as part of reconciliation.

e. Payment for Cost-Sharing Reductions

We proposed to implement a payment approach under which we would make monthly advance payments to issuers to cover projected cost-sharing reduction amounts, and then reconcile those advance payments at the end of the benefit year to the actual cost-sharing reduction amounts.[27] This approach fulfills the Secretary's obligation to make ''periodic and timely payments equal to the value of the reductions'' under section 1402(c)(3) of the Affordable Care Act. We expect that this approach would not require issuers to fund the value of any cost-sharing reductions prior to reimbursement. This approach is similar to the one employed for the low-income subsidy under Medicare Part D.

We are finalizing our payment approach as proposed with five specific modifications. The first two modifications relate to reimbursement for cost-sharing reductions for Indians, which are discussed in section III.E.4.i. of this final rule. The third modification is the addition of paragraph § 156.430(a)(4), clarifying that issuers of multi-State plans must provide the estimates described in paragraphs (1) and (2) of § 156.430(a) to OPM, rather than the Exchange, in the time and manner established by OPM. The fourth modification authorizes HHS to adjust the advance payments for cost-sharing reductions during the benefit year. As we acknowledged in the proposed rule, QHP issuers will have access to limited data on its expected enrollees prior to 2014, which could reduce the accuracy of the estimates used to develop the advance payment amounts. Because we wish to use the advance payment process to protect QHP issuers from being required to bear the entire financial burden of providing cost-sharing reductions over the benefit year, we are finalizing a change from the proposed rule to authorize HHS to adjust the advance payments if the QHP issuer provides evidence, certified by a member of the American Academy of Actuaries in accordance with generally accepted actuarial principles and methodologies, that the advance payments for a particular QHP are likely to be substantially different than the cost-sharing reduction amounts provided by the issuer that will be reimbursed by HHS after the end of the year during the reconciliation process. We discuss this policy further below in relation to § 156.430(b).

The fifth modification is to § 156.430(c). As discussed below, we are preserving the intent of the provisions proposed at § 156.430(c)(1) and (2) in finalized paragraphs (c)(1), (2) and (5). This restructuring allows for the addition of paragraphs (c)(3), and (4), which are established in an interim final rule with comment published elsewhere in this issue of the **Federal Register**. In that interim final rule with comment, we describe an approach that would permit a QHP issuer to calculate the value of the cost-sharing reductions provided under the methodology described in this final rule at § 156.430(c)(2), or to use an alternative, simplified methodology, under which the QHP issuer would calculate the

[27] We noted that these payments (both advance and reconciled), and the estimated or actual cost-sharing reductions underlying them, are subject to 45 CFR 156.280(e)(1)(ii).

value of the cost-sharing reductions provided using certain summary cost-sharing parameters. As discussed below and in that interim final rule with comment, we believe this flexibility to use an alternative methodology will reduce the administrative burden on QHP issuers.

Comment: We received several comments on our proposed payment approach. One commenter supported our proposal to provide advance payments and then reconcile those advance payments at the end of the benefit year to the actual cost-sharing reduction amounts. Another commenter suggested that the advance payment and reconciliation process would be too cumbersome and instead, HHS should simply reimburse issuers at the end of the year for the actual value of cost-sharing reductions provided. A third commenter agreed that an annual reconciliation process would be burdensome, and suggested that in the initial years the submission of data on the amount of cost-sharing reductions provided and the reconciliation of payments should be optional. These commenters urged that in future years, HHS should reimburse based on monthly estimates of the amount of cost-sharing reductions provided.

Response: We discuss below, in relation to § 156.430(c) and (d), our approach for addressing commenters' concerns regarding the submission of the amount of cost-sharing reductions provided and the reconciliation process.

To implement our proposed payment approach, in § 156.430(a)(1)(i) through (iv), we proposed that for each health plan that an issuer offers, or intends to offer, in the individual market on the Exchange as a QHP, the issuer must provide to the Exchange annually prior to the benefit year, for approval by HHS, an estimate of the dollar value of the cost-sharing reductions to be provided over the benefit year. If the QHP is a silver health plan, the submission must identify separately the per member per month dollar value of the cost-sharing reductions to be provided under each silver plan variation identified in § 156.420(a)(1), (2), and (3). And for each QHP, regardless of metal level, the submission must identify the per member per month dollar value of the cost-sharing reductions to be provided under the zero cost sharing plan variation. In addition, the estimate should be accompanied by supporting documentation validating the estimate. We expect that Exchanges will collect this information from issuers through the QHP certification process or an annual submission process, and then send the information to HHS for review as required by § 156.1030(b)(3) finalized under this rule. Sections 156.430(a)(1)(ii) and 156.430(a)(2) are further described in section III.E.4.i. of this final rule.

We further proposed that issuers develop the estimates using the methodology specified by HHS in the applicable annual HHS notice of benefit and payment parameters. In § 156.430(a)(3), we proposed that HHS approve estimates that follow this methodology. For the 2014 benefit year, we proposed that issuers use a methodology that utilizes the data that issuers submit under § 156.420 and § 156.470. As a result, issuers would not be required under this proposal to submit any additional data or supporting documentation to receive advance payments in benefit year 2014 for the value of the cost-sharing reductions that would be provided under silver plan variations.

Methodology for Developing Estimate of Value of Cost-Sharing Reductions for Silver Plan Variations for 2014 Benefit Year.

For the 2014 benefit year, we proposed that advance payments be estimated on a per enrollee per month basis using the following formula:

Per Enrollee Per Month Advance Payment = Monthly Expected Allowed Claims Costs for Silver Plan Variation × (Silver Plan Variation AV − Standard Plan AV)

In this formula, the monthly expected allowed claims cost for a silver plan variation would equal one-twelfth of the annual expected allowed claims costs allocated to EHB, other than services described in § 156.280(d)(1),[28] for the standard silver plan, multiplied by a factor to account for the increased utilization that may occur under the specific plan variation due to the reduced cost-sharing requirements. As proposed in § 156.470, the QHP issuer would submit the expected allowed claims cost information to the Exchange annually. The Exchange would then review this estimate, and submit the approved information to HHS, as described in § 155.1030(b)(2) above, for use in the advance payment calculation. HHS would then multiply the monthly expected allowed claims cost by one of the following induced utilization factors, to arrive at the monthly expected allowed claims cost for the particular plan variation. We proposed the following induced utilization factors based on our analysis of the expected difference in expenditures for enrollees in QHPs of different actuarial values. For this analysis, we used the Actuarial Value Calculator, developed by HHS using the Health Intelligence Company, LLC (HIC) database from calendar year 2010.[29]

TABLE 23—INDUCED UTILIZATION FACTORS FOR PURPOSES OF COST-SHARING REDUCTION ADVANCE PAYMENTS

Household income	Silver plan AV	Induced utilization factor
100–150 percent of FPL	Plan Variation 94 percent	1.12
150–200 percent of FPL	Plan Variation 87 percent	1.12
200–250 percent of FPL	Plan Variation 73 percent	1.00

In the second half of the formula, we proposed the multiplication of the monthly expected allowed claims cost for the particular plan variation by the difference in AV between the standard silver plan and the plan variation. We proposed to use the actuarial values of the QHPs and silver plan variations that the Exchange will submit to HHS under § 155.1030(a)(2).

We are finalizing the methodology for determining advance payments for the 2014 benefit year as proposed. As noted above, we are also adding paragraph (4) to § 156.430(a), clarifying that issuers of multi-State plans must provide the estimates described in paragraphs (1)

[28] Based on the definition of ''cost sharing'' in 45 CFR 156.20 and limits on cost-sharing reductions in section 1402(c)(4) of the Affordable Care Act, cost-sharing reductions are only provided on EHB. In addition, § 156.280(e)(1)(i) states that if a QHP provides coverage of services described in paragraph (d)(1) of that section, the QHP issuer must not use Federal funds, including cost-sharing reductions, to pay for the service.

[29] *http://cciio.cms.gov/resources/regulations/index.html#pm.*

and (2) of § 156.430(a) to OPM, in the time and manner established by OPM.

In § 156.430(b), we proposed making periodic advance payments to issuers based on the approved advance estimates provided under § 156.430(a) and the actual enrollment information. We proposed to use the methodology described above to determine the amount of these advance payments. We are finalizing the provisions at § 156.430(a) and (b) relating to the advance payments as proposed, with the following modification. In response to comments discussed below, we are adding subparagraph (b)(2) in the final rule to authorize HHS to adjust the advance payment amount for a particular QHP during the benefit year if the QHP issuer provides evidence, certified by a member of the American Academy of Actuaries in accordance with generally accepted actuarial principles and methodologies, that the advance payments for a particular QHP are likely to be substantially different than the cost-sharing reduction amounts that the QHP provides that will be reimbursed by HHS. Although QHP issuers will be made whole for the value of all cost-sharing reductions provided through the reconciliation process after the close of the benefit year, we recognize that in certain situations, QHP issuers may require adjustments to the advance payments during the benefit year. We do not include in this final rule a formal process for the submission of information for the adjustment of advance payments because we believe the need for an adjustment will be rare, and the circumstances necessitating the adjustment will likely be unique to each QHP issuer. HHS is also considering other mechanisms for mid-year adjustments to advance payments to ensure that QHP issuers are provided sufficient advance payments and to safeguard Federal funds. We anticipate providing further details on such mechanisms in future rulemaking. We also anticipate working closely with QHP issuers in order to monitor whether the advance payments are likely to be significantly greater than or less than the reconciled cost-sharing reduction amounts.

Comment: We received several comments on the methodology for developing estimates of the value of cost-sharing reductions for advance payments. One commenter stated that the formula appeared to be appropriate and will likely result in accurate estimates. However, the commenter was concerned that the formula could produce results that vary based on member rating factors.

Response: As discussed in the proposed Payment Notice in regard to the submission of the expected allowed claims costs under § 156.470(a) and (c), which is the basis of the proposed methodology for estimating the value of cost-sharing reductions, we expect issuers to calculate the expected allowed claims cost for a plan based on the cost of the EHB for all enrollees in all plans in the relevant risk pool under § 156.80 of the final Market Reform Rule, and not across a standardized population or a plan-specific population. This approach should average the effects of the allowable rating factors on plan liability. Therefore, we believe the results of the formula will be appropriately adjusted for the allowable rating factors.

Comment: Although commenters generally supported adjusting the expected allowed claims costs by an induced utilization factor, one commenter stated that the proposed factors do not adequately account for changes in utilization as enrollees in plan variations may also use more high-cost services.

Response: We recognize that additional adjustments are necessary to account for the expected increased utilization of enrollees in plan variations, and as a result created a cost-sharing reduction adjustment for the HHS risk adjustment model. As described in section III.B.3.b. of this final rule, this factor will help compensate QHP issuers with a high number of enrollees that qualify for cost-sharing reductions.

Comment: We received comments asking for additional detail on the process that HHS will use to approve the advance payment amounts. One commenter asked that issuers be permitted to make adjustments to the advance payment amounts to account for enrollment fluctuations or changing demographics of their enrolled population. Another commenter suggested that a process be developed to handle discrepancies in the advance payments on a prospective basis.

Response: Section 156.430(a)(3) as finalized here states that HHS's approval of the advance payment amounts will be based on whether the estimate is made consistent with the methodology specified in the HHS notice of benefit and payment parameters.

In addition, as discussed above, in response to the comments received, we are finalizing an additional provision to allow HHS to adjust the advance payment amount for a particular QHP during the benefit year if the QHP issuer provides evidence that meets certain standards. The addition of subparagraph (b)(2) aligns with our goal to reduce the financial burden resulting from cost-sharing reductions on QHP issuers during the benefit year, our proposal to perform periodic reconciliations, and the comments received.

In § 156.430(c), we proposed that a QHP issuer report to HHS the actual amount of cost-sharing reductions provided for use by HHS under § 156.430(d) in performing periodic reconciliations of the advance payments to the cost-sharing reductions actually provided. We noted that additional specifications regarding the submission of actual cost-sharing reduction amounts will be provided in future guidance; however, the preamble indicated our expectation that QHP issuers will submit the actual amount of cost-sharing reductions provided after the close of the benefit year. In § 156.430(c)(1) and (c)(2), we proposed specific standards for the reporting of cost-sharing reduction amounts. In § 156.430(c)(1), we proposed that in the case of a benefit for which the QHP issuer compensates the applicable provider in whole or in part on a fee-for-service basis, the QHP issuer submit the total allowed costs for essential health benefits charged for an enrollees' policy for the benefit year, broken down by what the issuer paid, what the enrollee paid, and the amount reimbursed to the provider for the amount that the enrollee would have paid under the standard QHP without cost-sharing reductions. In § 156.430(c)(2), we proposed that in the case of a benefit for which the QHP issuer compensates the applicable provider in any other manner (such as on a capitated basis), the QHP issuer submit the total allowed costs for essential health benefits charged for an enrollees' policy for the benefit year, broken down by what the issuer paid, what the enrollee paid, and the amount that the enrollee would have paid under the standard QHP without cost-sharing reductions. When we referred to compensation made on a capitated basis in this context, we meant a compensation model under which issuers make payments to providers based on a contracted rate for each enrollee, commonly referred to as a ''per-member-per-month'' rate, regardless of the number or type of services provided. We noted that a non-fee-for-service provider is not required to be reimbursed by the issuer. However, we indicated that we expected that issuers and providers in non-fee-for-service arrangements would make available to providers compensation for

cost-sharing reductions through their negotiated capitation payments. We sought comments on this assumption and other payment approaches for QHPs that use a capitated system to pay providers.

In § 156.430(d), we proposed to periodically reconcile advance payments to issuers against the actual cost-sharing reduction amounts reported under § 156.430(c). Thus, where a QHP issuer compensates a provider in whole or in part on a fee-for-service basis, we would reconcile the advance payments provided to the issuer against the actual amount of cost-sharing reductions reimbursed to providers and provided to enrollees. Where the QHP issuer compensates a provider under another arrangement, such as a capitated arrangement, we would reconcile the advance payments made to issuers against the actual cost-sharing reduction amounts provided to enrollees.

We are finalizing paragraph (d) as proposed. However, as noted before, we are modifying § 156.430(c). We are preserving the intent of the provisions proposed at § 156.430(c)(1) and (2), but restructuring the provisions into finalized paragraphs (c)(1), (2) and (5). This restructuring allows for the addition of paragraphs (c)(3) and (4), which are established in an interim final rule with comment published elsewhere in this issue of the **Federal Register**, and discussed below.

In this final rule, we simplify the language proposed at § 156.430(c)(1) so that it applies to all benefits, including those for which the QHP issuer compensates the applicable provider in a manner other than fee-for-service. Specifically, we establish that a QHP issuer, for each plan variation that it offers on the Exchange, submit to HHS, in the manner and timeframe established by HHS, for each policy, the total allowed costs for EHB charged for the policy for the benefit year, broken down by: (i) The amount the issuer paid; (ii) the amount the enrollee(s) paid; and (iii) the amount the enrollee(s) would have paid under the standard plan without cost-sharing reductions. In paragraph (c)(2), we codify in regulation text the methodology discussed in the preamble of the proposed rule for calculating the amount the enrollee(s) would have paid under the standard plan without cost-sharing reductions. We specify that QHP issuers must apply the actual cost-sharing requirements for the standard plan to the allowed costs for EHB under the enrollee's policy for the benefit year.

Lastly, we establish in paragraph (c)(5) that in the case of a benefit for which the QHP issuer compensates an applicable provider in whole or in part on a fee-for-service basis, allowed costs associated with the benefit may be included in the calculation of the amount that an enrollee(s) would have paid under the standard plan without cost-sharing reductions only to the extent the amount was either payable by the enrollee(s) as cost sharing under the plan variation or was reimbursed to the provider by the QHP issuer. This provision has the same effect as the language in § 156.430(c)(1) of the proposed rule. Although we do not specify a similar provision for issuers and providers in non-fee-for-service arrangements, we expect that those issuers will compensate providers for cost-sharing reductions through other payment processes.

Comment: We received a number of comments stating that the reporting requirements under § 156.430(c) are too burdensome. Commenters noted that although the reporting and reconciliation process is appropriate for the Medicare Part D Low-Income Subsidy Program, medical benefits are more complex than pharmaceutical benefits and often have a longer lag between submission and adjudication. Commenters stated that to meet the reporting requirements under § 156.430(c), QHP issuers would need to re-adjudicate each claim for enrollees receiving cost-sharing reductions in order to determine the difference in cost sharing between the applicable plan variation and the standard plan. This process could require the development of new information systems in a short period of time. One commenter stated that QHP issuers could provide HHS with access to member-level claims data for enrollees receiving cost-sharing reductions through a distributed data model, similar to the approach used for the risk adjustment program. The commenter stated that this would simplify administrative processes and provide issuers with more time to modify their IT systems. We also received several comments suggesting that HHS should allow QHP issuers to calculate an estimate of the value of cost-sharing reductions at the end of the year using a formula similar to that used for the advance payments, but based on the actual claims experience of the enrollees. These calculated amounts could be used for a reconciliation process, and would place less of a reporting burden on issuers. Commenters also offered another alternative approach under which issuers would file with the appropriate State department of insurance an adjusted net claims rate for each of their plan variations. HHS would then reimburse QHP issuers for cost-sharing reductions by multiplying the number of enrollees in each plan variation by the difference in net claims for the plan variation and the standard plan. Commenters also requested additional guidance on the reporting and reconciliation process.

Response: In the initial years of the Exchanges, before adequate data is available on the costs that will be associated with QHPs and their plan variations, we believe it is necessary to balance the need to safeguard Federal funds and the need to minimize burden on issuers. Therefore, as noted above, we are restructuring § 156.430(c) to allow for the addition of paragraphs (c)(3) and (4), which are established in an interim final rule with comment published elsewhere in this issue of the **Federal Register**. Paragraph (c)(3) permits QHP issuers to choose to calculate the amounts that would have been paid under the standard plan without cost-sharing reductions using a simplified methodology. Under this simplified methodology, as described in paragraph (c)(4), a QHP issuer may calculate the value of the cost-sharing reductions provided by using a formula based on certain summary cost-sharing parameters of the standard plan, applied to the total allowed costs for each policy. We believe this amendment will allow QHP issuers to choose the methodology that best aligns with their operational practices, which should reduce the administrative burden on issuers in the initial years of the Exchanges.

Comment: We received several comments stating that both the advance payments and the reconciliation process should account for the full cost of any induced utilization resulting from the cost-sharing reductions.

Response: Section 1402(c)(3) provides for the Secretary of HHS to make payments to QHP issuers equal to the value of the cost-sharing reductions. We interpret this provision to require the Secretary to reimburse QHP issuers for the reduction in cost sharing associated with any induced utilization; however, we do not believe this provision provides for the reimbursement of the remaining plan liability resulting from any induced utilization. Therefore, we finalize the payment methodology as proposed.

Comment: In response to the provisions proposed in § 156.430(c) under which QHP issuers would submit to HHS the portion of the total allowed costs for EHB paid by the enrollee, one commenter noted that issuers cannot report this amount with certainty since

the provider ultimately collects this amount from the enrollee.

Response: We clarify that QHP issuers should report the amount that a provider could charge to an enrollee, accounting for the cost-sharing reduction. We also clarify that the amount reported as paid by the enrollee should include any cost sharing paid by a third party, including a State, on behalf of the enrollee.

Comment: We received several comments that the reporting requirements under § 156.430(c) will be difficult for issuers to meet that do not use fee-for-service reimbursement methods. Commenters suggested that such issuers should receive capitated payments and be exempt from the reconciliation process.

Response: We support the use of such payment methods by issuers to pay providers; therefore, the restriction finalized at § 156.430(c)(5) does not apply to issuers that do not use fee-for-service reimbursement methods. However, we believe that these plans must still reconcile the advance cost-sharing reductions payments they receive from the Federal government.

Comment: Another commenter proposed that QHP issuers make available to providers the amounts reported under § 156.430(c). The commenter stated that this information would allow providers to verify that enrollees received the correct cost-sharing reductions and to identify any inappropriate payments from QHP issuers.

Response: At this time, we are not addressing this issue, but encourage QHP issuers and providers to develop processes to support the provision of cost-sharing reductions.

We proposed in § 156.430(e) that if the actual amounts of cost-sharing reductions exceed the advance payment amounts provided to the issuer, HHS would reimburse the issuer for the shortfall, assuming that the issuer has submitted its actual cost-sharing reduction amounts to HHS in accordance with § 156.430(c). If the actual amounts of cost-sharing reductions are less than the advance payment amounts provided to the issuer, we proposed that the QHP issuer must repay the difference to HHS.

In § 156.430(f), we proposed rules on advance payment and reimbursement of cost-sharing reductions during special transitional periods of coverage where eligibility and enrollment are uncertain, including requirements relating to cost-sharing reductions provided during grace periods following non-payment of premium. In § 156.430(f)(1), we proposed that a QHP issuer will be eligible for reimbursement of cost-sharing reductions provided prior to a termination of coverage effective date. Furthermore, any advance payments of cost-sharing reductions would be paid to a QHP issuer for coverage prior to a determination of termination, including during any grace period as described in § 155.430(b)(2)(ii)(A) and (B). The determination of termination occurs on the date that the Exchange sends termination information to the QHP issuer and HHS under § 155.430(c)(2). The QHP issuer would be required to repay any advance payments of cost-sharing reductions made with respect to any month after any termination of coverage effective date during a grace period. A QHP issuer generally would not be eligible for reimbursement of cost-sharing reductions provided after the termination of coverage effective date with respect to a grace period. This proposed policy aligns with the approach for advance payments of the premium tax credit described in § 156.270(e).

We proposed in § 156.430(f)(2) and (3) that in the case of any other retroactive termination, if the termination (or late determination thereof) is the fault of the QHP issuer, as reasonably determined by the Exchange, the QHP issuer would not be eligible for advance payments and reimbursement for cost-sharing reductions provided during the period following the termination of coverage effective date and prior to the determination of the termination; and if the termination (or the late determination thereof) is not the fault of the QHP issuer, as reasonably determined by the Exchange, the QHP issuer would be eligible for advance payments and reimbursement for cost-sharing reductions provided during such period.

In § 156.430(f)(4), we proposed that a QHP issuer would be eligible for advance payments and reimbursement of cost-sharing reductions provided during any period for resolution of inconsistencies in information required to determine eligibility for enrollment under § 155.315(f).

We are finalizing these provisions as proposed.

Comment: In general, commenters expressed their support for the policies set forth at § 156.430(f), but asked for clarification on the application of the grace period in relation to cost-sharing reductions. Commenters noted that in many states, issuers are not permitted to pend claims, and that pharmaceutical claims in particular are typically processed at the time and place of service. Other commenters stated that QHP issuers should not be permitted to pend claims because it shifts the collection burden to health care providers. Commenters also requested clarification on whether QHP issuers may pend cost-sharing reductions during the second and third months of a grace period.

Response: The Exchange Establishment Final Rule, at § 156.270(d), authorizes QHP issuers to pend or pay claims during the second and third month of a grace period in accordance with company policy and State laws. However, as provided in § 156.270(d)(3), QHP issuers must notify providers of the possibility for denied claims when an enrollee is in the second and third months of the grace period. We continue to believe this policy appropriately balances these financial risks, while protecting enrollees. We clarify that we expect QHP issuers to ensure throughout the grace period that cost-sharing reductions are applied at the point of collection for eligible enrollees, as required by § 156.410(a) as finalized here. If an enrollee's coverage is terminated, QHP issuers may deny any claims that were pending, including the reimbursement to the provider for the value of the cost-sharing reductions. Providers could then seek payment directly from the enrollee for any services provided after the termination of coverage, including a refund for the cost-sharing reduction. For a discussion of the standards finalized at § 156.430(b), (d) and (g) in relation to cost-sharing reductions for Indians, please refer to section III.E.4.i below.

f. Plans Eligible for Advance Payments of the Premium Tax Credit and Cost-Sharing Reductions

In § 156.440, we clarified the applicability of advance payments of the premium tax credit and cost-sharing reductions to certain QHPs. We proposed that the provisions of part 156 subpart E generally apply to qualified health plans offered in the individual market on the Exchange.

However, we proposed in § 156.440(a) that the provisions not apply to catastrophic plans because section 36B(c)(3)(A) of the Code defines a QHP to exclude catastrophic plans—a definition that also applies to section 1402 of the Affordable Care Act, by means of section 1402(f)(1) of the Affordable Care Act. Further, eligibility for cost-sharing reductions is tied to a ''coverage month with respect to which a premium tax credit is paid,'' which would exclude months during which the individual is enrolled in a catastrophic health plan. Therefore, we proposed that enrollment in a

catastrophic plan precludes eligibility for cost-sharing reductions.

We proposed in § 156.440(b) that the provisions of subpart E, to the extent related to cost-sharing reductions, not apply to stand-alone dental plans. Section 1311(d)(2)(B)(ii) of the Affordable Care Act provides that an Exchange must allow a stand-alone dental plan that provides pediatric dental benefits that are EHB to be offered separately from or in conjunction with a QHP. The Exchange Establishment Rule, at § 155.1065, implements these provisions. However, section 1402(c)(5) of the Affordable Care Act states if an individual enrolls in both a QHP and a stand-alone dental plan, the provisions on cost-sharing reductions under sections 1402(a) and (c) of the Affordable Care Act do not apply to that portion of the cost-sharing reductions properly allocable to pediatric dental EHB. Thus, if an individual enrolls in both a QHP and a stand-alone dental plan offered on an Exchange, cost-sharing reductions are not payable with respect to pediatric dental benefits offered by the stand-alone dental plan.

In § 156.440(b), we also proposed that the provisions of subpart E, to the extent relating to advance payments of the premium tax credit, apply to stand-alone dental plans because section 36B(b)(3)(E) of the Code provides for the portion of the premium for such plans that is allocable to EHB coverage be taken into account in calculating the premium tax credit.

We proposed to clarify in § 156.440(c) that the provisions of this subpart E apply to child-only plans. Section 1302(f) of the Affordable Care Act and § 156.200(c)(2) provide that an issuer that offers a QHP at any level of coverage in an Exchange also must offer the plan at the same level of coverage in the Exchange only to individuals that have not attained age 21. Under section 1302(f) of the Affordable Care Act, the child-only plan is to be treated as a QHP, and is therefore subject to the provisions of subpart E. We are finalizing these provisions as proposed with minor technical corrections in paragraphs (a) and (c) to clarify the cross-references.

Comment: One commenter was concerned with the exclusion of stand-alone dental plans from the cost-sharing reduction program. The commenter stated that, because pediatric dental coverage is a required essential health benefit and the statute guarantees cost-sharing reductions for eligible individuals for essential health benefits, cost-sharing reductions should apply to stand-alone dental plans.

Response: We read section 1402(c)(5) of the Affordable Care Act to provide that cost-sharing reductions are not payable with respect to pediatric dental benefits offered by a stand-alone dental plan. Additionally, requiring payment of cost-sharing reductions on pediatric dental benefits offered by a stand-alone dental plan would create significant operational complexities. However, cost-sharing reductions will be provided for pediatric dental benefits if they are offered by a QHP (that is not a stand-alone dental plan).

g. Reduction of Enrollee's Share of Premium To Account for Advance Payments of the Premium Tax Credit

In § 156.460(a), we proposed to codify QHP issuer requirements set forth in section 1412(c)(2)(B) (i)—(iii) of the Affordable Care Act. The law authorizes the payment of advance tax credits to QHP issuers on behalf of certain eligible enrollees. The advance payment must be used to reduce the portion of the premium charged to enrollees. In § 156.460(a)(1), we proposed to codify clause (i) of that subparagraph, which requires that a QHP issuer reduce the portion of the premium charged to the enrollee by the amount of the advance payment of the premium tax credit for the applicable month(s).

In § 156.460(a)(2), we proposed to codify section 1412(c)(2)(B)(ii) of the statute, which requires that the QHP issuer notify the Exchange of any reduction in the portion of the premium charged to the individual. This notification will be sent to the Exchange through the standard enrollment acknowledgment in accordance with § 156.265(g). That information would then be submitted to the Secretary via enrollment information sent from the Exchange to HHS under § 155.340(a)(1).

In § 156.460(a)(3), we proposed to codify section 1412(c)(2)(B)(iii), which requires that a QHP issuer display the amount of the advance payment of the premium tax credit for the applicable month(s) on an enrollee's billing statement. This requirement would ensure that the enrollee is aware of the total cost of the premium and would allow the enrollee to verify that the correct amount for the advance payment of the premium tax credit has been applied to his or her account.

Further, in § 156.460(b), we proposed to prohibit QHP issuers from terminating or refusing to commence coverage on account of any delay in payment of an advance premium tax credit on behalf of an enrollee if the issuer has been notified by the Exchange under § 155.340(a) that it will receive such advance payment. We stated that we expect that monthly advance payments of the premium tax credit will be paid in the middle of the month, and proposed to prohibit QHP issuers from declining or terminating coverage when the enrollee's payments have been timely but the advance payments of the premium tax credit are not made before the due date for the premium.

We also proposed to add paragraph (f) to § 155.340 (which we designated as § 155.340(g) in this final rule), which sets forth standards for an Exchange when it is facilitating the collection and payment of premiums to QHP issuers and stand-alone dental plans on behalf of enrollees, as permitted under § 155.240(c). Consistent with § 156.460(a), proposed § 155.340(f)(1) would direct the Exchange to reduce the portion of the premium for the policy collected from the enrollee by the amount of the advance payment of the premium tax credit for the applicable month(s). Proposed § 155.340(f)(2) directs an Exchange to display the amount of the advance payment of the premium tax credit for the applicable month(s) on an enrollee's billing statement. Collectively, proposed § 155.340(f) and § 156.460 as proposed ensure that an enrollee is aware of the total cost of the premium so that he or she may verify that the correct advance payment of the premium tax credit has been applied. The goals of these provisions are to promote transparency between Exchanges or QHP issuers and consumers, accurate application of advance payments of the premium tax credit, and continuity of coverage for individuals. For the reasons described in the proposed rule and considering the comments received, we are finalizing § 156.460 as proposed, and are finalizing proposed § 155.340(f) as § 155.340(g).

Comment: A number of commenters stated their support for these provisions directing QHP issuers and Exchanges facilitating the collection and payment of premiums to reduce premiums collected from enrollees by the amount of the advance payments of the premium tax credit. The commenters also supported having QHP issuers and Exchanges display the advance payment of the premium tax credit on enrollees' billing statements. One commenter urged HHS to test the format of the billing statement to ensure it is clear to consumers. Several commenters also supported the proposed prohibition on a QHP issuer terminating coverage following a delay in the issuer's receipt of advance payments of the premium tax credit if the issuer has been notified by the Exchange that it will receive the payment. One commenter stated that

HHS should implement a process to ensure that individuals prematurely terminated in violation of such a provision have coverage reinstated quickly.

Response: Although at this time we do not intend to propose additional requirements related to the format of billing statements, we encourage Exchanges and QHP issuers to test billing statement formats with consumers to ensure that the purpose of the document is clear. We appreciate the comment that we implement a process to quickly correct instances of premature termination. We will take this into consideration in future rulemaking.

h. Allocation of Rates and Claims Costs for Advance Payments of Cost-Sharing Reductions and the Premium Tax Credit

As described in section III.E.2. of this final rule, we proposed in § 156.470 to direct issuers to allocate the rate or expected premium for each metal level health plan and stand-alone dental plan offered, or proposed to be offered, in the individual market on the Exchange, and the expected allowed claims costs for the metal level health plans, among EHB and additional benefits. Under the proposal, issuers would submit these allocations annually to the Exchange, along with an actuarial memorandum with a detailed description of the methods and specific bases used to perform the allocations. The Exchange and HHS would use this memorandum to verify that these allocations meet the standards set forth in paragraphs (c) and (d) of § 156.470.

The comments on the provisions at § 156.470, and our response, are discussed in section III.E.2. of this final rule. We are finalizing the provisions proposed in § 156.470, with a modification to paragraph (d), and technical modifications to § 156.470(a),(b), and (e). We are also adding paragraph (f) to § 156.470 to clarify the application of these provisions to multi-State plans.

i. Special Cost-Sharing Reduction Rules for Indians

In this section, we address certain provisions throughout proposed subpart E governing cost-sharing reductions for Indians.

Interpretation of section 1402(d)(2) of the Affordable Care Act: In the proposed rule, we discussed in detail our interpretation of sections 1402(d)(1), 1402(d)(2), and 1402(f)(2) of the Affordable Care Act. The implication of these interpretations is that cost-sharing reductions under sections 1402(a) and 1402(d)(1) of the Affordable Care Act are only available to individuals who are eligible for premium tax credits. However, we stated that under our interpretation, cost-sharing reductions under section 1402(d)(2) of the Affordable Care Act would be available to Indians regardless of their eligibility for premium tax credits. This approach aligns with the typical practice today, under which cost sharing is not required with respect to services provided to an Indian by the IHS, an Indian Tribe, Tribal Organization, or Urban Indian Organization.

We also noted that section 1402(d) of the Affordable Care Act specifies that reductions in cost sharing must be provided to Indians who purchase coverage on the Exchange. Although section 1402(d)(1) of the Affordable Care Act applies only to the individual market, section 1402(d)(2) of the Affordable Care Act does not contain this explicit restriction. We proposed to interpret section 1402(d)(2) of the Affordable Care Act to apply only to the individual market because we believe section 1402(d)(2) flows from and builds upon the identification of ''any qualified health plans'' made in section 1402(d)(1) and because we believe that Congress did not intend for reductions in cost sharing to be available outside the individual market Exchanges. We are finalizing this interpretation of the statute, which underlies the provisions implementing cost-sharing reductions for Indians.

Comment: Several commenters recommended that HHS issue uniform operational guidance on the identification of Indians for use by Exchanges and by the IRS that is consistent with the existing HHS regulations under 42 CFR 447.50. Commenters expressed concern that the lack of uniform operational guidance will impede Exchange, Medicaid, and IRS staff in efficiently making accurate and consistent determinations of eligibility and will result in delayed or denied access for some Indians to specific benefits afforded them under the Affordable Care Act.

Response: The definition proposed for Indian in § 156.400 has the meaning given the term in § 155.330(a). We also note that § 155.350 of the Exchange Establishment Rule currently provides guidance on the verification of Indian status. Further guidance on this issue is outside the scope of this Payment Notice.

Proposed provisions of part 156 relating to Indians: Similar to cost-sharing reductions for non-Indians, we proposed to use the concept of plan variations to describe how Indians would pay only limited, or as appropriate, none of the total cost sharing required under that QHP, with the Federal government bearing the remaining cost-sharing obligation. Our proposed regulations cross-referenced the eligibility regulations at § 155.305(g), as finalized here, and § 155.350(b), finalized in the Exchange Establishment Rule. In § 156.410(b)(2), we proposed that a QHP issuer assign an Indian determined by the Exchange to have an expected household income that does not exceed 300 percent of the FPL to a zero cost sharing plan variation of the selected QHP (no matter the level of coverage) with no cost sharing, based on the enrollment and eligibility information submitted to the QHP issuer by the Exchange. In § 156.410(b)(3), we proposed that a QHP issuer assign an Indian determined eligible by the Exchange for cost-sharing reductions under section 1402(d)(2) of the Affordable Care Act to a limited cost sharing plan variation of the selected QHP (no matter the level of coverage) with no cost sharing required on benefits received from the IHS and certain other providers.

The assignments to the plan variations would be subject to § 155.305(g)(3), which governs plan variation placement decisions when a single policy covers two or more individuals who are eligible for different levels of cost-sharing reductions. In the preamble, we also discussed an alternative approach to the provision of cost-sharing reductions for Indians. Rather than requiring QHP issuers to assign Indians to zero and limited cost sharing plan variations, QHP issuers would simply assign Indians to the standard plan (or as appropriate, silver plan variation), and waive the cost-sharing requirements, as appropriate. We proposed the approach first described above, but sought comments on which approach HHS should adopt beginning January 1, 2016. For the reasons described in the proposed rule, and considering the comments we received, we are finalizing the policy as proposed, though we continue to welcome comments on what approach HHS should adopt for benefit year beginning on or after January 1, 2016.

Comment: Several commenters expressed their support for the proposed policy at § 155.305(g)(3), noting that the alternative approach would be difficult to administer and would require QHP issuers to make significant changes to their claims systems because issuers today are not able to administer member-based cost-sharing rules. One commenter was concerned that it would be difficult for issuers to waive cost sharing for Indians at or below 300

percent of FPL at the point of service under the alternate approach.

Other commenters, however, expressed concern that the proposed approach would require families with Indian members and non-Indian members to purchase multiple plans in order for each family member to receive the full value of the cost-sharing reductions to which they are entitled. Commenters stated that under this policy, the cost savings available to Indians could be negated by shifting the liability to other non-eligible family members.

A number of commenters recommended a different approach to address the potential increase in costs to be paid by Indian and non-Indian members who elect to enroll in different plans in order to take full advantage of the cost-sharing reductions available to them. These commenters recommended that if family members are enrolled in separate plan variations, the combination of the premiums be required to be no greater than the premium the family would pay if all members were enrolled in the same plan variation. They also recommended that the maximum out-of-pocket liability for the plan variation in which the non-Indians enrolled be set at a proportion of the maximum liability of a single family plan. These commenters also suggested that HHS should implement the alternative approach sooner than 2016.

Response: We will consider adopting the approach recommended by commenters for future benefit years; however, given the current timeframe and operational concerns, we believe that for the 2014 benefit year it is infeasible to require issuers to submit plan variations that take into account cost-sharing obligations for Indian and non-Indian family members covered under a single QHP policy. Therefore, in accordance with the policy in the proposed rule that we are finalizing here, the assignment of Indians to plan variations would be subject to § 155.305(g)(3). If we propose to change the policy for years beginning in 2016, we will provide issuers with sufficient notice and opportunity to comment to effectuate the required operational change.

In § 156.420(b), we proposed that QHP issuers submit to the Exchange the zero cost sharing plan variation and limited cost sharing plan variation for each of the QHPs (at any level of coverage) that it intends to offer on the Exchange. The zero cost sharing plan variation—addressing cost-sharing reductions under section 1402(d)(1) of the Affordable Care Act and available to Indians with expected household incomes that do not exceed 300 percent of the FPL, as determined under § 155.350(a)—must have all cost sharing eliminated. The limited cost sharing plan variation—addressing cost-sharing reductions under section 1402(d)(2) of the Affordable Care Act and available to all Indians as determined in § 155.350(b)—must have no cost sharing on any item or service furnished directly by the IHS, an Indian Tribe, Tribal Organization, Urban Indian Organization, or through referral under contract health services, as defined in 25 U.S.C. 1603. We noted that unlike silver plan variations, zero cost sharing plan variations and limited cost sharing plan variations must only be submitted for certification when the standard plan is submitted for QHP certification.

In § 156.420(d), we proposed language similar to that proposed in § 156.420(c) for silver plan variations—that the zero cost sharing plan variations and limited cost sharing plan variations cover the same benefits and include the same providers as the standard QHP, and require the same out-of-pocket spending for benefits other than EHB. We also proposed that a limited cost sharing plan variation, which would have no cost sharing on any item or service furnished directly by the IHS, Indian Tribe, Tribal Organization, or Urban Indian Organization, or through referral under contract health services, must have the same cost sharing on items or services not described in § 156.420(b)(2) as the QHP with no cost-sharing reductions.

Lastly, we proposed that zero cost sharing plan variations and limited cost sharing plan variations be subject to all standards applicable to the standard QHP (except for the requirement that the plan have an AV as set forth in § 156.140(b)). We are finalizing these provisions as proposed with two modifications. With regard to the submission of plan variations under § 156.420(b), we are revising the language to align with the language in § 156.420(a), and § 156.470(a) and (b) as finalized. We are also adding paragraph (g) to § 156.420 to clarify the applicability of these provisions to multi-State plans.

Comment: We received a comment stating that QHP issuers should not be required to count the cost sharing that an enrollee in a zero cost sharing plan variation would have paid towards the annual limitation on cost sharing, stating that this would require a manual process which would be resource-intensive and result in errors.

Response: We clarify that for purposes of administering the plan variations and providing cost-sharing reductions, QHP issuers are not required to apply any cost sharing that an enrollee would have been required to pay under the standard plan but was not required to pay under the plan variation to the annual limitation on cost sharing. However, any cost sharing that an enrollee is required to pay (for example, for those in the limited cost sharing plan variation, cost sharing for services provided by non-IHS or related providers), would count towards the annual limitation on cost sharing. This would also apply to silver health plans when there is no cost sharing for a benefit or service.

Comment: We received a comment in relation to the policy proposed at § 156.410(a), requiring QHP issuers to ensure than an individual eligible for cost-sharing reductions pay only the cost sharing required of an eligible individual when the cost sharing is collected. The commenter suggested that this language might be confusing since in many cases, individuals assigned to a zero cost sharing plan variation or a limited cost sharing plan variation will have no cost sharing. The commenter also suggested that QHP issuers should provide information electronically to providers concerning an individual's cost-sharing protections.

Response: We are finalizing the regulation as proposed without modification, though we clarify that a QHP issuer would be required to ensure that an individual assigned to a zero cost sharing plan variation must not be required to pay any cost sharing at the time when cost sharing would normally be collected. Similarly, a QHP issuer must ensure that an individual assigned to a limited cost sharing plan variation must not be required to pay any cost sharing at the time when cost sharing would normally be collected if the individual receives services or items from IHS or a related provider.

Comment: Several commenters stated that cost-sharing reductions for Indians should not be limited to EHB. Commenters stated that the cost-sharing exemptions for Indians in section 1402(d) of the Affordable Care Act were enacted as distinct, special provisions for Indians and are not subject to the general cost sharing limitation to EHB in section 1402(c)(4) of the Affordable Care Act.

Response: We interpreted and implemented section 1301(c) of the Affordable Care Act to limit the definition of cost sharing to EHB when finalizing § 155.20 of the Exchange Establishment Rule. The regulation defines ''cost sharing'' as any expenditure required by or on behalf of an enrollee with respect to EHB.

Further, section 1402(c)(4) of the Affordable Care Act provides that all cost-sharing reductions under that section are applicable only to cost-sharing for EHB and not for additional benefits.

Comment: Several commenters raised concerns that providers would be confused regarding the payment they can expect from QHP issuers when an Indian is referred through the contract health services program to an out-of-network provider, or when an Indian is not enrolled in a QHP. Some commenters requested further clarification on the definition of ''contract health services.''

Response: We are working to ensure that referrals through the contract health services program are processed in accordance with the standards in this final rule in a manner that is clear to providers and QHP issuers. In addition, we note that ''contract health services'' is defined under 25 U.S.C. section 1603, and we do not propose to codify this definition in the final rule.

In addition, we note that the proposed Medicaid and Exchange Eligibility Appeals and Notices Rule proposes to codify a prohibition in section 1916(j) of the Social Security Act on imposing premiums or cost sharing on an Indian who is eligible to receive or has received and item or service furnished directly by the Indian Health Service, an Indian Tribe, Tribal Organization, or Urban Indian Organization, or through referral under contract health services. We note the similarity in the statutory language, but note the different income levels and benefits provided under the respective statutes. We intend to continue to review this issue and anticipate issuing guidance to address the operational concerns raised by the commenters.

Comment: Several commenters suggested that issuers should be permitted to submit zero cost sharing plan variations at only one metal level, unless there are significant differences in plan design such as prescription drug formularies, provider networks or covered benefits between metal levels. These commenters noted that it is unlikely that an individual will choose a higher cost plan in that situation because the lower metal level plan will provide the same benefits and networks, at a lower premium and with no cost sharing. One commenter suggested that QHP issuers could administer cost-sharing reductions for Indians regardless of income on a case-by-case basis.

Response: We recognize that there is no practical need to ensure that eligible Indians have access to higher metal level plans if a lower metal level plan offers identical benefits and networks, at a lower premium and with no cost sharing. We also recognize the burden on QHP issuers of developing plan variations that provide no additional benefit to enrollees. Finally, we do not wish to unnecessarily task Exchanges with certifying such plan variations. Therefore, we clarify that HHS will deem an Exchange to be adequately enforcing the requirements of § 156.420(b)(1) if, within a set of standard plans offered by an issuer that differ only by the cost sharing or premium (that is, the benefits, networks, and all other aspects of the standard plans are exactly the same), the Exchange allows the issuer to submit one zero cost sharing plan variation for only the standard plan within the set with the lowest premium. If an issuer offers standard plans with different benefits or networks, each set of standard plans must have a zero cost sharing plan variation. We do not propose to extend this interpretation to the submission of limited cost sharing plan variations because these variations may still have cost sharing, which could vary among standard plans. We note that for 2014, for operational reasons, the FFE will still require QHP issuers to submit a zero cost sharing plan variation for any level of coverage that the QHP issuer seeks certification. While this operational limitation for 2014 does present additional data inputs, we do not expect it to require additional analysis by issuers because the content of the submissions would be identical except for cost sharing, which would be eliminated for the zero cost sharing plan variation. We will consider changing this approach in later benefit years through future rulemaking.

Section 1402(d)(3) of the Affordable Care Act directs the Secretary to pay a QHP issuer the amount necessary to reflect the increase in AV of a QHP required by reason of the changes in cost sharing for Indians under section 1402(d) of the Affordable Care Act. We proposed to use the same payment approach to reimburse cost-sharing reductions for Indians under section 1402(d) of the Affordable Care Act as we proposed to use for cost-sharing reductions provided to eligible individuals with household incomes between 100 and 250 percent of the FPL under section 1402(a) of the Affordable Care Act. That is, we proposed that QHP issuers submit estimates for the dollar value of the cost-sharing reductions to be provided under the zero cost sharing plan variation and limited cost sharing plan variations in order to receive advance payments, and then reconcile the advance payments to the actual cost-sharing reduction amounts. This unified approach satisfies both the requirement for ''periodic and timely payments equal to the value of the reductions'' under section 1402(c)(3) of the Affordable Care Act, and payment of ''the amount necessary to reflect the increase in AV of the plan'' under section 1402(d)(3) of the Affordable Care Act. We are finalizing the payment approach as proposed, with one amendment at § 156.430(g) relating to compensation for items and services provided directly by the Indian Health Service, an Indian Tribe, Tribal Organization, or Urban Indian Organization, or through referral under contract health services.

In § 156.430(a)(1)(ii), we proposed that for each metal level QHP that an issuer offers, or intends to offer in the individual market on the Exchange, the issuer must provide to the Exchange annually prior to the benefit year, for approval by HHS, estimates, and supporting documentation validating the estimates, of the per member per month dollar value of cost-sharing reductions to be provided under the zero cost sharing plan variation. These estimates must be developed using the methodology specified by HHS in the applicable annual HHS notice of benefit and payment parameters. We proposed that issuers use the same methodology described above for estimating advance payments for the cost-sharing reductions provided under silver plan variations for estimating advance payments for the cost-sharing reductions provided under the zero cost sharing plan variation. This methodology would utilize data that QHP issuers submit for other requirements, such as § 156.420 and § 156.470. As a result, QHP issuers would not be required under the proposal to submit separate estimates or supporting documentation to receive advance payments in benefit year 2014 for the value of the cost-sharing reductions that would be provided under the zero cost sharing plan variation.

As in the case of silver plan variations, the following formula would be used:

Per Enrollee Per Month Advance Payment
= Monthly Expected Allowed Claims Costs for Zero Cost Sharing Plan Variation
× (Zero Cost Sharing Plan Variation AV—Standard Plan AV)

In this formula, the monthly expected allowed claims cost for the zero cost sharing plan variation would equal one-twelfth of the expected allowed claims

costs allocated to EHB, other than services described in § 156.280(d)(1), for the standard plan, multiplied by a factor to account for the increased utilization that may occur under the zero cost sharing plan variation due to the elimination of the cost-sharing requirements. As proposed at § 156.470, the QHP issuer would submit the expected allowed claims cost information to the Exchange annually. The Exchange would then review this allocation, and submit the approved allocation to HHS, as described in § 155.1030(b)(2), for use in the advance payment calculation. HHS would then multiply the monthly expected allowed claims cost by the induced utilization factor, to arrive at the monthly expected allowed claims cost for the zero cost sharing plan variation. We proposed the following induced utilization factors for the zero cost sharing plan variation, based on our analysis of the HIC database from calendar year 2010.

TABLE 24—INDUCED UTILIZATION FACTORS FOR ADVANCE PAYMENTS OF COST-SHARING REDUCTIONS FOR INDIANS

Zero cost sharing plan variation	Induced utilization factor
Zero Cost Sharing Plan Variation of Bronze QHP	1.15
Zero Cost Sharing Plan Variation of Silver QHP	1.12
Zero Cost Sharing Plan Variation of Gold QHP	1.07
Zero Cost Sharing Plan Variation of Platinum QHP	1.00

In the second half of the formula, we proposed to multiply the monthly expected allowed claims cost for the zero cost sharing plan variation by the difference in AV between the standard plan and the plan variation. The AV of the zero cost sharing plan variation would be 100, because all cost sharing is eliminated for this plan variation. Lastly, the per enrollee per month estimate will be multiplied by the number of individuals assigned to the zero cost sharing plan variation (based on the most recent confirmed enrollment data) in a given month to arrive at the total advance payment that will be provided to the issuer for each QHP. We are finalizing these provisions as proposed.

Comment: One commenter requested clarification on the induced utilization factors for cost-sharing reductions for Indians, and whether these factors would ensure that QHP issuers are ''made whole'' for the value of the cost-sharing reductions.

Response: As in the case of the silver plan variations, we incorporated an induced utilization factor into the advance payment formula to ensure that QHP issuers are compensated for the elimination of cost sharing for any increase in utilization resulting from the modification of the cost-sharing requirements. In addition, we developed an induced utilization adjustment for the risk adjustment model, to further offset the higher costs that enrollees eligible for cost-sharing reductions might incur, as described in section III.B.3.b. of this final rule. We believe this approach ensures that issuers are appropriately compensated for the value of the cost-sharing reductions.

In § 156.430(a)(2), we proposed the process for estimating the value of cost-sharing reductions to be provided under the limited cost sharing plan variation open to Indians regardless of household income. We proposed that QHP issuers have the option to forgo submitting an estimate of the value of these cost-sharing reductions if they believe the operational cost of developing the estimate is not worth the value of the advance payment. If a QHP issuer chooses to not submit an estimate, the issuer would provide the cost-sharing reductions as required, and would be reimbursed by HHS after the close of the benefit year, as proposed in § 156.430(c). If a QHP issuer does seek advance payments for the these cost-sharing reductions, the issuer would provide to the Exchange annually prior to the benefit year, for approval by HHS, an estimate and supporting documentation validating the estimate, of the per member per month dollar value of the cost-sharing reductions to be provided under the limited cost sharing plan variation of the QHP. Under our proposal, the estimate would be developed using the methodology specified by HHS in the applicable annual HHS notice of benefit and payment parameters. For the 2014 benefit year, we simply proposed that issuers submit a reasonable estimate of the value of the reductions, developed by a member of the American Academy of Actuaries in accordance with generally accepted actuarial principles and methodologies, and that the estimate should be no higher than the corresponding estimate for the zero cost sharing plan variation. We did not propose a standardized methodology because, unlike other plan variations, these cost-sharing reductions are to be provided for only a specific subset of providers, and the Affordable Care Act does not prescribe an AV for these reductions. As noted above, because the actuarial value calculator is based on a standard population, it will not have the functionality to generate an accurate AV for these plan variations.

We are finalizing both our proposal for annual rulemaking in the notice of benefits and payment provisions to establish a methodology for advance payments for cost-sharing reductions under the limited cost sharing plan variation, and our proposal of a specific methodology for the 2014 benefit year. As in the case of the other plan variations, we plan to review the methodology for calculating the advance payments once more data is available, and future notices of benefits and payment parameters may include different methodologies. We welcome comments to consider as part of this process. We are also clarifying the language at § 156.430(a)(2) by replacing the phrase ''[an issuer] offers or seeks to offer'' from the proposed rule with the phrase ''[an issuer] offers, or intends to offer'' in the final rule, to align with the language in § 156.430(a)(1).

As described above, the Exchange will collect the estimate and supporting documentation, and submit the estimate and supporting documentation to HHS for review, as finalized under § 155.1030. If HHS finds the estimate to be reasonable, HHS will make advance payments to a QHP issuer following the same procedure as for the other plan variations, under § 156.430(b), as finalized in this rule.

In § 156.430(c) through (e), we proposed that QHP issuers submit to HHS the amount of cost-sharing reductions provided under each plan variation. These amounts would then be reconciled against any advance payments. As explained in more detail in section III.E.4.e, we are modifying the reporting provisions described in § 156.430(c), and finalizing as proposed the reconciliation process described in § 156.430(d) and (e). We are also publishing an interim final rule with comment elsewhere in this issue of the **Federal Register** providing an

alternative methodology for reporting the value of the cost-sharing reductions provided. We expect that QHP issuers would be able to use this alternative methodology, if they so choose, for reporting the value of cost-sharing reductions provided under the zero cost sharing plan variation and the limited cost sharing plan variation.

Comment: In general, commenters supported HHS's proposal to use the same payment approach to reimburse cost-sharing reductions for Indians under section 1402(d) as we proposed to use for cost-sharing reductions provided to eligible individuals with household incomes between 100 and 250 percent of the FPL under section 1402(a) of the Affordable Care Act. One commenter, however, stated that due to demographics, very few individuals will be assigned to the limited cost sharing plan variation, and as a result, QHP issuers should simply receive a capitated payment for the value of these cost-sharing reductions, and not be required to submit information for the reconciliation of payments.

Response: At this time, we believe it would be difficult for issuers and HHS to accurately estimate the ''increase in AV of the plan'' resulting from the cost-sharing reductions provided under section 1402(d)(2) of the Affordable Care Act. Relevant data on Indian populations' cost sharing is not easily available, and issuers would not be able to use the AV calculator to estimate Indian-only cost-sharing features of a plan because the calculator is based on a standard population. Therefore, we finalize the approach set forth in the proposed rule for QHP issuers to submit data on the dollar value of cost-sharing reductions provided to eligible Indians under zero cost sharing and limited cost sharing plan variations, which will be reconciled against any advance payments.

Comment: Another commenter was concerned about the prohibition on cost sharing under the limited cost sharing plan variation for services or items provided through referral under the contract health services program. The commenter suggested that until an accurate, online verification system for contract health services referrals can be established, QHP issuers should be able to rely on the information they receive from providers, and be held harmless for these cost-sharing reductions in the reconciliation process.

Response: We recognize issuers' concerns about this provision, and plan to issue guidance on this topic in the future.

In the proposed rule, we noted that section 1402(d)(2)(B) of the Affordable Care Act states that QHP issuers cannot reduce payments to the relevant facility or provider for an item or service by the amount of any cost sharing that would be due from an Indian but for the prohibition on cost sharing set forth in section 1402(d)(2) of the Affordable Care Act. We proposed not to codify this provision in regulation because we believed it is clear and self-enforcing, and because we believe that it would also be impermissible for an issuer to reduce payments to a provider for any cost-sharing reductions required under sections 1402(a) or 1402(d)(1) of the Affordable Care Act—particularly because these cost-sharing reductions are to be reimbursed by HHS. We also noted that nothing in this section exempts an issuer from section 206 of the Indian Health Care Improvement Act, which provides that the United States, an Indian Tribe, Tribal organization, or urban Indian organization has the right to recover from third party payers, including QHPs, up to the reasonable charges billed for providing health services, or, if higher, the highest amount an insurer would pay to other providers.

Comment: Commenters asserted that regulation text is needed to ensure there are no reductions in payments to the relevant facility or provider for an item or service by the amount of any cost sharing that would be due from an Indian but for the prohibition on cost sharing set forth in section 1402(d)(2) of the Affordable Care Act.

Response: We have codified this provision by adding § 156.430(g) to the final rule. Regardless of the contracting relationship between a QHP issuer and the Indian health provider, the issuer may not reduce payments to the provider by the amount of any cost sharing that would be due from the Indian under this final rule.

F. Provisions on User Fees for a Federally-Facilitated Exchange (FFE)

Section 1311(d)(5)(A) of the Affordable Care Act contemplates an Exchange charging assessments or user fees to participating health insurance issuers to generate funding to support its operations. If a State does not elect to operate an Exchange or does not have an approved Exchange, section 1321(c)(1) of the statute directs HHS to operate an Exchange within the State. In addition, 31 U.S.C. 9701 permits a Federal agency to establish a charge for a service provided by the agency. Circular No. A–25R establishes Federal policy regarding user fees, and specifies that a user charge will be assessed against each identifiable recipient of special benefits derived from Federal activities beyond those received by the general public. We proposed to revise § 156.50(b) and to add paragraph (c) to provide for a user fee from participating issuers (as defined in § 156.50(a)) to support the operation of FFEs under these authorities.

Circular No. A–25R states that user charges should generally be set at a level so that they are sufficient to recover the full cost to the Federal government of providing the service when the government is acting in its capacity as sovereign (as is the case when HHS operates a FFE). However, Circular No. A–25R also allows for exceptions to this policy, if approved by OMB. Because we wish to encourage issuers to offer plans on FFEs and to align with the administrative cost structure of State-based Exchanges, and because we believe that growing enrollment is likely to increase user fee receipts in future years, we are seeking an exception to the policy for 2014.

We proposed to revise § 156.50(b) so that it would apply only to user fees to support State-based Exchanges. In § 156.50(c), we proposed that a participating issuer offering a plan through a FFE remit a user fee to HHS each month, in the time and manner established by HHS, equal to the product of the billable members enrolled through the Exchange in the plan offered by the issuer, and the monthly user fee rate specified in the annual HHS notice of benefit and payment parameters for the applicable benefit year. For the 2014 benefit year, we proposed a monthly user fee rate equal to 3.5 percent of the monthly premium charged by the issuer for a particular policy under the plan. We note that this user fee would apply to plans offered through FF–SHOPs, as well as individual market FFEs. We noted that additional guidance on user fee collection processes would be provided in the future. We anticipate collecting user fees by deducting the user fee from Federally-administered Exchange-related program payments. If a QHP issuer does not receive any Exchange-related program payments, the issuer would be invoiced for the user fee on a monthly basis.

In addition, we welcomed comments on a policy that we were considering that would provide for the pooling of Exchange user fees, distribution costs, or all administrative costs across a particular market (in the case of the FFE, however, the user fee would be collected only from issuers participating in the FFE). We note that our proposed rule, ''Coverage of Certain Preventive Services under the Affordable Care Act'' (78 FR 8457), contemplates a proposal

to reduce the amount of the FFE user fee for QHP issuers that provide coverage for contraceptive services for participants of a self-insured plan that is established or maintained by an eligible organization (or have an affiliated issuer that does so).[30] Comments are separately welcome on that proposed regulation on or before April 8, 2013.

Based on the comments we received, we are finalizing the proposal and the regulation text with the following modification: we are clarifying the calculation of the user fee so that the user fee rate is applied directly to the premium set by the issuer for a policy and is charged on each policy with enrollment through the FFE.

Comment: A number commenters expressed concern that our proposed FFE user fee would increase coverage costs for consumers; however, other commenters expressed support for the proposed FFE user fee.

Response: We do not believe that the FFE user fee rate, set at 3.5 percent of premiums, would increase the cost of coverage or discourage consumers from purchasing health insurance through an FFE. We anticipate that the user fee will account for the cost of many of the Exchange-related administrative functions that issuers would otherwise have to perform, such as consumer assistance and enrollment support, and that the cost of the user fee will be outweighed by the many benefits that result from participation in an Exchange. The Exchanges are expected to enhance competition among issuers in the non-group market, which should lower premiums due to the elimination of medical underwriting and the associated issuer administrative costs. Exchanges will also create larger purchasing pools, which should create economies of scale, lowering administrative costs for QHP issuers, and further reducing premiums.

Comment: Several commenters requested that we provide more details regarding our user fee calculations and a breakdown of costs by jurisdiction. Several commenters suggested that we calculate the FFE user fee amount on a per capita basis rather than as a percent of premiums, and a few other commenters supported the percent of premium approach.

Response: We are finalizing our policy to calculate the FFE user fee as a percentage of premium; however, we are modifying the proposed rule to clarify that the FFE user fee amount is set as a percent of premium, without regard to the number of billable members on a policy. This clarification does not change the value of the user fee. We appreciate commenters' concerns that FFE operating costs be minimized and transparent, and will take those comments into consideration in our approach to FFE operating costs.

Comment: One commenter noted that basing the user fee amount on a percent of premium for a particular policy was confusing.

Response: We are clarifying that an issuer's monthly user fee amount is equal to the product of the monthly user fee rate specified in the annual HHS notice of benefit and payment parameters for the applicable benefit year—which for 2014 is 3.5 percent—and the monthly premium charged by the issuer for *each policy* offered through a Federally-facilitated Exchange.

Comment: One commenter expressed concern about HHS's proposal to align the FFE user fee rate with the user fee rate assessed by State-based Exchanges. Other commenters urged HHS to ensure that the overall amount of the FFE user fee reflected only HHS's actual costs related to FFE operations.

Response: We are clarifying that we are establishing the FFE user fee rate for 2014 only, with the intent of keeping the user fee as low as possible. Independent of final SBE user fee rates, we clarify that we are not considering raising the FFE user fee beyond our operating costs in the future.

Comment: We received several comments on our proposal to pool user fees across all plans in a market within a State. Some commenters suggested that this policy would unfairly increase costs for members that are not enrolled on an Exchange. However, other commenters supported the pooling Exchange user fees. A few commenters requested clarification on how issuers would be permitted to account for user fees on their members' bills, specifically whether issuers would be able to account for user fees in their premium amounts or whether user fees would be billed separately.

Response: We believe that including Exchange user fees in the single risk pool requirement will help prevent adverse selection against QHPs on Exchanges. In the final Market Reform Rule at § 156.80, we require issuers to pool all user fee costs across their applicable market in a State. We refer readers to the discussion associated with § 156.80 of the Market Reform Rule for additional details on this policy.

G. Distributed Data Collection for the HHS-operated Risk Adjustment and Reinsurance Programs

1. Background

In the proposed rule, we proposed to amend 45 CFR part 153 by adding subpart H, entitled ''Distributed Data Collection for HHS-Operated Programs,'' which set forth the data collection process that HHS would use when operating a risk adjustment or reinsurance program on behalf of a State. We proposed to use a distributed approach to data collection for the risk adjustment and reinsurance programs when HHS operates those programs on behalf of a State. In the proposed rule, we described a distributed approach as one in which each issuer formats its own data in a manner consistent with the applicable database, and then passes the relevant information to the entity responsible for making payments and charges for the program. We believe that this approach minimizes issuer burden while protecting enrollees' privacy. We received a number of comments supporting the proposed distributed data approach, and are finalizing the provisions as proposed.

2. Issuer Data Collection and Submission Requirements

Under the HHS-operated risk adjustment and reinsurance programs, we proposed to use a distributed data collection approach to run software on enrollee-level and claims-level data that reside on an issuer's dedicated data environment. This approach requires close technological coordination between issuers and HHS.

a. Distributed Data Environments

In § 153.700(a), we proposed that an issuer of a risk adjustment covered plan or a reinsurance-eligible plan in a State where HHS is operating the risk adjustment or reinsurance program on behalf of the State establish a dedicated data environment and provide data access to HHS, in a manner and timeframe specified by HHS, for risk adjustment and reinsurance operations. To accomplish the distributed data collection approach for both the reinsurance and risk adjustment programs, issuers would establish secure, dedicated, electronic server environments to house medical and pharmacy claims, encounter data, and enrollment information. Issuers would be directed to make this data accessible to HHS in HHS-specified electronic formats, and to provide HHS with access to the data environment to install, update, and operate common software and specific reference tables

[30] See 78 FR 8474.

for the purpose of executing risk adjustment and reinsurance program operations. Issuers would also be directed to correct submitted files to resolve problems detected by HHS during file processing. Except for purposes of data validation and audit, HHS will not store any personally identifiable enrollee information or individual claim-level information.

We note that HHS will store, in a private and secure HHS computing environment, aggregate plan summary data and reports based on activities performed on each issuer's dedicated server environment.

Comment: Several commenters expressed concern that the distributed approach would have limited use because it would not track the same enrollee across multiple years.

Response: The distributed data approach would not constrain the risk adjustment methodology when HHS operates risk adjustment because the concurrent model does not require tracking of enrollees over multiple years

Comment: We received a few comments requesting clarification as to what information from the distributed data environments would be shared with States. A few commenters asked for States to have access to data on the distributed data environments.

Response: We are considering ways to provide States with information about HHS-operated programs, and welcome feedback about the types of summary information would be most useful to States. In doing so, we must balance program transparency with protection of potentially sensitive information, including consumer health information. We will provide further information in subsequent guidance, as appropriate.

Comment: A number of commenters requested technical details about the distributed data environment. Several commenters requested the specific requirements for the necessary enrollment, claims and encounter data, applicable software and testing schedule for risk adjustment data submissions. One commenter asked that issuers be permitted to provide two separate data sets on the distributed data environment—one for risk adjustment in the individual and small group markets, and a second for the reinsurance that will only include data for the individual market. One commenter asked for further details on the types of accepted information and recommended that chart reviews be considered acceptable data.

Response: HHS has provided a list of required data for the HHS-operated distributed data approach in the PRA package approved under OMB Control Number 0938–1155. HHS will make available the data formats, definitions, and technical standards applicable to the HHS-operated distributed data approach in future guidance, including standards relating to data from chart reviews.

Comment: We received comments requesting further clarification about the uses of data collected through the distributed data approach.

Response: We intend to provide further guidance on this issue. We do note that data use will be consistent with HHS's commitment to protecting the privacy and security of enrollees. As a result, we would not store any personally identifiable enrollee information or individual claim-level information in connection with this data collection, except for the purposes of data validation and audit. We believe that this approach minimizes issuer burden while protecting enrollees' privacy.

Comment: One commenter requested that the recalibrations of the risk adjustment models not be based on data from the distributed data environment, but asked that HHS conduct a separate data collection designed specifically for the recalibration of the risk adjustment models.

Response: We are exploring using data from the distributed data environment for future recalibration of the HHS risk adjustment models. We will provide further details on model recalibration in future rulemaking and guidance.

b. Timeline

We proposed in § 153.700(b) that issuers must establish the dedicated data environment (and confirm proper establishment through successfully testing the environment to conform with HHS standards for such testing) three months prior to the first date of full operation.

Comment: A few commenters sought clarification on when HHS would conduct testing of the distributed data environment in order to develop the distributed data environment for full operation.

Response: To ensure accuracy in the application of the distributed data approach, HHS will work with issuers to establish robust systems. Issuers will have the opportunity to submit data files to a test environment. HHS will provide support for issuers who conduct such testing as well as provide ongoing support for the duration of the programs. As testing and implementation will be ongoing, we note that an issuer must establish the dedicated data environment (and confirm proper establishment through successfully testing the environment to conform with applicable HHS standards for such testing) three months prior to full operation, that is, three months prior to the first date the plan could accrue claims for risk adjustment and reinsurance purposes. Even after an issuer's dedicated data environment is fully operational, further testing and modifications may be necessary. Further details and specifications for such testing will be provided in future guidance.

c. Enrollment, Claims and Encounter Data

In § 153.710(a), we proposed that an issuer of a risk adjustment covered plan or reinsurance-eligible plan in a State in which HHS is operating the risk adjustment or reinsurance program, as applicable, provide to HHS, through the dedicated data environment, access to the enrollee-level plan enrollment data, enrollee claims data, and enrollee encounter data specified by HHS.

Comment: Several commenters sought clarification on whether claims will be dated by the date of admission or the date of discharge. One commentator requested clarification on how claims that straddle the benefit year would be handled. Several commenters requested that claims be dated by date of admission rather than date of discharge, to address the issue of claims that straddle multiple years. Another commenter recommended that risk adjustment scores be based on claims with dates of service from January 1 through December 31.

Response: The proposed rule stated that data should be submitted for the applicable benefit year by April 30 of the year following the end of the applicable benefit year. The discharge date would be used to date claims, because we believe that the discharge date best ensures that services provided across benefit years will be considered in their entirety rather than being partially or fully excluded from consideration as a result of the data submission timing requirements. For example, if an individual is admitted to a hospital in December 2014 and is discharged in January 2015, the incurred costs that occurred in both December 2014 and January 2015 would be considered in the 2015 benefit year for both reinsurance payments and calculation of enrollee risk scores for risk adjustment when HHS operates either of those programs.

Comment: We received several comments requesting clarification on HHS' data storage requirements.

Response: Under § 153.620(b), an issuer that offers risk adjustment covered plans would be required to retain any information requested to support risk adjustment data validation for a period of at least ten years after the date of the report. We will provide further guidance on the data storage requirements for reinsurance-eligible plans and risk adjustment covered plans in forthcoming rulemaking and guidance.

d. Data Requirements

In the proposed rule, we described the types of data that would be acceptable for the reinsurance and risk adjustment programs when HHS operates these programs on behalf of a State.

When HHS is operating reinsurance on behalf of a State, we proposed that medical and pharmacy claims with discharge dates or through dates of service (when no discharge date is applicable, as is often the case for professional services) that fall in the applicable benefit year would be eligible for reinsurance payments for that benefit year.

When HHS is operating risk adjustment on behalf of a State, we proposed that institutional and medical claims and encounter data with discharge dates or through dates of service that fall in the applicable benefit year would be eligible for risk adjustment payments and charges for that benefit year. The data to calculate enrollee risk scores for purposes of risk adjustment would include diagnoses reported on institutional and medical claims that result in final payment action or encounters that result in final accepted status. Only the diagnoses reported on certain hospital inpatient facility, hospital outpatient, and physician provider claims will be acceptable when HHS operates risk adjustment. The risk adjustment model discussed earlier in this preamble provides a description of HHS's criteria for identifying and excluding claims from providers.

Comment: We received a comment requesting clarification on the acceptable provider types.

Response: Diagnoses will only be acceptable for risk adjustment enrollee risk score calculations if they meet criteria that are acceptable for HHS risk adjustment data collection. Generally, for both inpatient and outpatient services, diagnoses are acceptable if from a qualified provider, but only if the procedure code was not for diagnostic laboratory or diagnostic radiology services. HHS will release the full list of acceptable provider types and criteria in forthcoming guidance.

Comment: One commenter recommended that unpaid claims be included in the calculation of enrollee risk scores.

Response: While there may be some advantages to inclusion of unpaid claims, we do not plan to accept claims where services were denied or not covered because HHS risk adjustment models were calibrated on paid claims. However, if services were approved and an issuer incurred no expenses because the claim was fully paid through cost sharing, then those claims would be acceptable for consideration (for example, if the allowable cost of a service provided was $15 and the enrollee's co-pay was $15).

e. Claims Data

We proposed in § 153.710(b) that all claims data submitted by an issuer of a risk adjustment covered plan or reinsurance-eligible plan in a State in which HHS is operating the risk adjustment or reinsurance program, as applicable, must have resulted in payment by the issuer (payment of cost sharing by the enrollee). The enrollee-level data must include information from claims and encounter data (including data related to cost-sharing reductions, to permit HHS to calculate enrollee paid claims net of cost-sharing reductions) as sourced from all medical and pharmacy providers, suppliers, physicians, or other practitioners who furnished items or services to the issuer's health plan members for all permitted paid medical and pharmacy services during the benefit period. All data must be provided at the level of aggregation specified by HHS.

Comment: Several commenters asked HHS to notify issuers when HHS identifies errors with data submitted to distributed data environments. One commenter requested that HHS flag claims with derived costs that have not been accepted for payment.

Response: We intend to provide each issuer with a periodic report on data functions performed in each issuer's distributed data environment, and to identify reinsurance-eligible claims. The reports would indicate whether HHS accepted or rejected submitted files and data, and would identify errors detected by HHS. Issuers would need to provide corrected files and data to address errors identified in HHS-provided reports for those files and data to be eligible for reinsurance processing. Timeframes for the processing and reporting of these reports, including for receipt of corrected files and discrepancy resolution, will be provided in future guidance.

Comment: Several commenters requested that HHS provide interim estimates for reinsurance payments and risk adjustment scores. These comments noted that interim estimates will assist issuers in completing financial statements and developing rates for the next calendar year.

Response: We recognize that both the risk adjustment and reinsurance programs are important programs in stabilizing premiums in the individual and small group markets. We will provide further detail on our approach to interim reporting in forthcoming guidance.

f. Claims Data From Capitated Plans

In § 153.710(c), we proposed that an issuer that does not generate claims in the normal course of business must derive costs on all applicable provider encounters using their principal internal methodology for pricing those encounters. If a plan has no such methodology, or has an incomplete methodology, we proposed that the plan be permitted to implement a methodology or supplement the methodology in a manner that yields derived claims that are reasonable in light of the specific market that the plan is serving.

Comment: Commenters generally supported HHS's inclusion of capitated plans' data in the reinsurance and risk adjustment programs. We received many comments asking HHS to provide additional guidance on deriving claims costs or methodological examples of how different types of capitation arrangements would derive their costs, including deriving costs for value-based strategies. Commenters also requested that the State and HHS approve fee schedules to ensure compliance with the reinsurance program.

Response: The proposed approach allows capitated plans the flexibility to use current pricing methodologies, if applicable. Many capitated plans have methods in place for deriving the costs of encounters for participation in other State and Federal programs. If a plan has no such methodology, or has an incomplete methodology, the plan would be permitted to implement a methodology or supplement the methodology in a manner that yields derived claims that are reasonable in light of the specific market that the plan is serving. We believe that permitting flexibility, rather than setting forth specific methodologies or fee schedules, better enables issuers to determine methodologies which are reasonable for the issuer's market.

Comment: One commenter stated that some health plans that sub-capitate

payments to providers may face difficulty in collecting comprehensive and accurate data on a timely basis.

Response: HHS initially considered a claims submission deadline of March 31 but extended the deadline to April 30 to allow issuers more time to submit the necessary enrollment and claim data. The claims submission deadline of April 30 of the year following the applicable benefit year is the latest possible date for HHS to meet our payment processing and reporting obligations codified in the Premium Stabilization Rule. Reinsurance and risk adjustment payment reporting obligations must be completed before the calculations for the risk corridors and MLR programs, and consequently require claims to be submitted by April 30.

Comment: Commenters requested that HHS set forth in regulatory text that capitated plans' derived cost claims will be subject to audit.

Response: Capitated plans, like all plans that submit reinsurance payment requests, or data to be considered for reinsurance payments or risk adjustment, would be subject to validation and audit. We have included data validation language in § 153.240(a)(3) for State-operated reinsurance programs, and in § 153.350 and § 153.630 for State- and HHS-operated risk adjustment programs, respectively. We will issue further rulemaking with regard to HHS-operated reinsurance program oversight for all claims, including those from capitated plans.

g. Establishment and Usage of Masked Enrollee Identification Numbers

We proposed in § 153.720(a) that an issuer of a risk adjustment covered plan or reinsurance-eligible plan in a State in which HHS operates risk adjustment or reinsurance, as applicable, must establish a unique masked enrollee identification number for each enrollee, in accordance with HHS-defined requirements as described in this section, and maintain the same masked enrollee identification number for an enrollee across enrollments or plans within the issuer, within the State, during a benefit year. In § 153.720(b), we proposed that an issuer of a risk adjustment covered plan or reinsurance-eligible plan in a State in which HHS is operating the risk adjustment or reinsurance program, as applicable, may not include an enrollee's personally identifiable information in the masked enrollee identification number or use the same masked enrollee identification number for different enrollees enrolled with the issuer. As discussed in OMB Memorandum M–07–16, the term ''personally identifiable information'' is a broadly used term across Federal agencies, and has been defined in the Office of Management and Budget Memorandum M–07–16 (May 22, 2007).[31]

Comment: We received several comments in support of using a masked enrollee number. However one commenter expressed concern that the provisions may not be sufficiently protective.

Response: HHS has taken several steps to ensure robust privacy and security standards. A distributed data approach protects consumer health data in a number of ways. First, a distributed data approach eliminates the need to transmit sensitive data. Data can be particularly vulnerable during transmission, so this approach eliminates this risk. HHS expects that information provided to HHS will be limited to information reasonably necessary for use in the risk adjustment and reinsurance programs. Also, with this approach, we are better able to limit the amount of data needed for program operations. We will be releasing, in forthcoming rulemaking, compliance standards for privacy and security standards, as applicable.

h. Deadline for Submission of Data

We proposed in § 153.730 that an issuer of a risk adjustment covered plan or reinsurance-eligible plan in a State in which HHS operates risk adjustment or reinsurance, as applicable, submit data to be considered for risk adjustment payments and charges and reinsurance payments for the applicable benefit year by April 30 of the year following the end of the applicable benefit year. In order for HHS to provide periodic reports on data functions performed in each issuer's distributed data environment, HHS recommends issuers submit data at least quarterly throughout the benefit year to support the calculation of reinsurance payments and risk adjustment payments and charges.

Comment: We received a comment requesting clarification on the penalty for non-compliant data submission.

Response: Compliance requirements will be forthcoming. We note, however, that one consequence of an issuer failing to timely submit claims and enrollment data would be that the information needed to calculate risk scores and reinsurance allowable amounts would not be available, potentially resulting in a loss of risk adjustment or reinsurance payments for the issuer.

Comment: Several commenters requested clarification on the claims run out period.

Response: An issuer of a risk adjustment covered plan or reinsurance eligible plan in a State in which HHS operates risk adjustment or reinsurance should submit data by April 30 of the year following the applicable benefit year. For example, claims incurred in the 2014 benefit year must be submitted to HHS by April 30, 2015. The submission deadline will allow issuers time to process claims and submit data to their distributed data systems for HHS evaluation, and will provide HHS adequate time to calculate payments and charges.

H. Small Business Health Options Program

1. Employee Choice in the Federally-Facilitated SHOP (FF–SHOP)

In our proposed rule, we proposed that qualified employers in FF–SHOPs will choose a level of coverage (bronze, silver, gold, or platinum) and a contribution, and employees can then choose any QHP at that level.

In stakeholder consultations following the publication of the Exchange Establishment Rule, some issuers expressed openness to allowing the employee to ''buy up'' to certain plans at the next higher level of coverage, thereby offering employees a broader range of health plans. We sought comments on whether FF–SHOPs should offer an additional employer option that would allow a qualified employer to make available to employees all QHPs at the level of coverage selected by the employer plus any QHPs at the next higher level of coverage that a QHP issuer agrees to make available under this option. QHP issuers could decide whether or not to make available QHPs at the next higher level of coverage above the level of coverage selected by the employer.

We also sought comments on a transitional policy in which a Federally-facilitated SHOP (FF–SHOP) would allow or direct employers to choose a single QHP from those offered through the FF–SHOP. We received the following comments regarding the proposed provisions of choice in the Federally-facilitated SHOP:

Comment: A few commenters opposed offering employers the single QHP option, suggesting that each SHOP should focus on providing employee choice. Most commenters on this issue supported offering a single QHP option for employers, either as an additional

[31] Available at: *http://www.whitehouse.gov/sites/default/files/omb/memoranda/fy2007/m07-16.pdf.*

option or as the only option in the initial years of each SHOP. The commenters who supported allowing a qualified employer only the option of offering a single QHP in the initial years of SHOP operation cited several concerns, including whether issuers could complete enrollment and accounting system changes required to interact with the SHOP enrollment and premium aggregation systems required by employee choice; and whether there would be adequate time to educate employers, employees, brokers about the employer and employee choices available in the SHOP. They further suggested that tying Exchange participation to SHOP participation could lead some issuers to participate in neither the Exchange nor the SHOP.

Response: Each SHOP has the option to allow employers to offer employees a single QHP. We have concluded for the reasons identified by the commenters that, as a transition to broader employer adoption of employee choice models, each FF–SHOP should exercise this option, providing employers the option of offering a single QHP to employees, as the small group market customarily does today. This employer option will allow employers who prefer to offer employees a single QHP to participate in an FF–SHOP and retain potential eligibility for the small business tax credit, which is only available through a SHOP Exchange beginning in 2014.

We have also concluded that effective implementation of employee choice in the federally-facilitated SHOP will not be possible in 2014 because of operational challenges noted by the commenters. Therefore, we are proposing in the Small Business Health Options Program proposed rule issued simultaneously with this final rule and published elsewhere in this issue of the **Federal Register** that: (1) The effective date of the employee choice requirements (§ 155.705(b)(2)) and the premium aggregation requirements (§ 155.705(b)(4)) will be January 1, 2015; (2) SHOP Exchanges may offer employee choice and perform premium aggregation for plan years beginning on or after January 1, 2014; and (3) an FF–SHOP will not offer employee choice and premium aggregation until plan years beginning on or after January 1, 2015.

Comment: A few commenters supported a single QHP option but only if linked to the required use of composite premiums.

Response: We believe the decision about the use of calculated composite premiums should remain an employer decision, unless State law requires that premiums be presented to employers as composite premiums, and have not adopted the linkage suggested by the commenters.

Comment: The employer option of broader, two-level plan choice was supported by a number of commenters, either as proposed or as two-level plan choice among all plans at those levels, without the QHP issuer's choice whether to offer as a buy-up. Several commenters characterized employee choice as a key distinguishing feature of the SHOP, and one suggested considering full employee choice. Many commenters, however, cited the adverse selection that may occur with choices across levels of coverage and recommended restricting employee choice to a single level of coverage chosen by the employer. One commenter noted the operational complexity of a buy-up option.

Response: We are not finalizing the rule with provisions for the FF–SHOPs to accommodate the two-level plan choice because of concerns about adverse selection in the first year of SHOP operation. We note that broader employee choice is a desirable feature of a FF–SHOP that will be explored in subsequent years. Further, the final rule at § 155.705(b)(3)(i) permits each SHOP the flexibility to offer qualified employers choices beyond making one metal level available to employees. Although we are not exercising this flexibility for the FF–SHOPs, we anticipate that some State-based SHOPs may do so.

Comment: One commenter asked that the final notice reflect that employer offerings may also be subject to collective bargaining agreements.

Response: We concur with that comment and note here that employer offers of benefits may be subject to the provisions of collective bargaining agreements.

We are finalizing the rule for the FF–SHOPs with some modifications from the proposal. Under § 155.705(b)(3) as finalized, each FF–SHOP will allow qualified employers the choice of offering employees either all QHPs at a single level of coverage selected by the employer or a single QHP selected by the employer. However, we are proposing elsewhere in this issue of the **Federal Register** that, as a matter of transition, each SHOP have the option to choose whether to implement employee choice and premium aggregation beginning January 1, 2014 or January 1, 2015, with each FF–SHOP exercising the January 1, 2015 implementation option.

2. Methods for Employer Contributions in an FF–SHOP

Employers may elect a variety of ways to contribute toward health coverage that are consistent with Federal law. Because employees in the SHOP may be choosing their own coverage and will need to know the net cost to them after the employer's contribution, each employer will need to choose a contribution method before its employees select their qualified health plans. To facilitate this, we proposed in § 155.705 (b)(11)(i) that each SHOP could define a standard method by which employers would contribute toward the employee coverage. We also proposed in § 155.705 (b)(11)(ii) a specific, standardized method for the FF–SHOPs—a method that reflects a meaningful employer choice and that conforms to existing Federal law.[32]

Comment: A broad range of commenters supported our proposal. One commenter expressed concern about the effect on older employees, but recognized the need to match the outside market options. Two commenters suggested requiring a calculated composite premium as the only allowable method.

Response: The choice of contribution method offered in each FF–SHOP reflects a meaningful choice available to employers in 2014, absent a provision in State law to the contrary. We note that the premium differential effect on older employees is limited by the maximum 3:1 ratio for adults. As noted in the proposal, we believe the decision about whether to use a calculated composite premium is best made by the employer so long as that choice is consistent with applicable State law.

Comment: One commenter suggested addressing the contribution method by allowing employers to offer only a single QHP as a transition, which would also give issuers time to adopt SHOP per member rating rules.

Response: Whether an employer offers a single QHP or all QHPs at a given level of coverage, an FF–SHOP will still need to adopt an approach to employer contributions. The approach proposed in the draft Notice and finalized in this rule will allow employers options regarding how they and their employees contribute toward coverage that applies to both single QHP and single level of coverage offers.

Comment: One commenter stated that an issuer should not be involved in employer decisions about allocation of premium between employer and employee.

[32] See 77 FR 73184–85.

Response: We do not believe that either the proposed rule or the final rule involves the QHP issuer in employer decisions about the employer contribution toward the premium. The FF–SHOP standard contribution method, as proposed and finalized, does establish a method by which the employer can contribute in a standardized, non-discriminatory way. The QHP issuer is not involved in the FF–SHOP policy nor is the issuer involved in employer decisions about the allocation of premium between employer and employee.

Comment: One commenter asked for clarification about how mid-year turnover would be handled with a calculated composite premium method.

Response: In future guidance, we will discuss mid-year changes in group composition and how a SHOP might address the resulting changes in the average premium for the group.

We proposed at § 155.705(b)(11)(ii)(D) to permit a qualified employer participating in an FF–SHOP to establish, to the extent allowed by Federal and State law, different contribution percentages for different employee categories. We have concluded that this provision is inconsistent with the uniformity provisions established in Internal Revenue Service Notice 2010–82, which require employers to contribute a uniform percentage to all employees in order to claim a small business tax credit for health insurance premiums paid. Although the provisions in Notice 2010–82 apply only to employers claiming the tax credit in tax years through December 31, 2013, the use of a uniform percentage for all employees helps assure that the employer contributions do not violate other anti-discrimination provisions. We therefore are not finalizing the proposal at § 155.705(b)(11)(ii)(D) and the final rule redesignates the proposed paragraphs (b)(11)(ii)(E) and (F) as paragraphs (b)(11)(ii)(D) and (E). We are otherwise finalizing the rule as proposed.

3. Linking Issuer Participation in an FFE to Participation in an FF–SHOP

We proposed standards that we believe will help ensure that qualified employers and qualified employees enrolling through an FF–SHOP are offered a robust set of QHP choices in a competitive small group marketplace. We believe that a competitive marketplace offering qualified individuals, qualified employers, and qualified employees a choice of issuers and QHPs is a central goal of the Affordable Care Act, and that the SHOP can provide an effective way for small employers to offer their employees a choice of issuers and QHPs. We proposed in § 156.200(g) to leverage issuers' participation in an FFE to ensure participation in the corresponding FF–SHOP, provided that no issuer would be required to begin offering small group market products as a result of this provision. We sought comments on this issue and whether or not the policy meets three intended goals: Enhancing employer and employee choice, assuring similar effects on single issuers and issuer groups, and not requiring any issuer to begin offering coverage in the small group market in order to meet this provision.

Comment: A substantial number of commenters supported the tying provision and the issuer group definition, concluding that the provision would enhance consumer choice in FF–SHOPs.

Many commenters opposed the tying provision, arguing that plans should have full choice about participation and that requiring participation may make it harder to meet the timeline for QHP submission in the individual market FFE. Several commenters specifically suggested that the tying provision might result in decreased issuer participation in the individual market FFE in some states. Several commenters noted the extensive efforts that would be required to offer plans in the SHOP, even if the issuer were already participating in the State's small group market.

Response: We have considered the concerns about the tying provision and conclude that adopting the provision will help assure that small group market QHPs are available to employers and employees. We have also considered comments that tying would lead to issuers declining participation in both the FFE and the FF–SHOP, and concluded that it is more likely to result in that outcome among issuers with relatively low market shares for whom the administrative costs to modify systems to enable SHOP participation may outweigh the value of increased enrollment. Finally, we considered how these issuer concerns about tying might relate to issuer concerns about the effects of employee choice, and whether those concerns might be reduced by our concurrent proposal to allow SHOPs to delay the implementation of employee choice by a year.

Adoption of a tying standard that applies only to issuers with more than a threshold market share will serve the goal of assuring that QHPs are available in each FF–SHOP in 2014 without unduly burdening issuers. We examined small group market share data based on earned premiums reported to HHS in conjunction with evaluations of issuer minimum loss ratios and have concluded that using a 20 percent market share to determine whether a small group market issuer is subject to the tying provision will result in sufficient competition and the ability to offer a robust set of QHPs in the FF–SHOPs, while minimizing the burden on small issuers. We are finalizing the rule accordingly.

Comment: One commenter objected because OPM does not require multi-State plans to offer SHOP products until 2017, and CO–OPs are not subject to a similar provision.

Response: In a final rule published elsewhere in this issue of the **Federal Register**, OPM establishes a similar tying provision for multi-State plans based on market share. CO–OPs operate under a different tying provision. We direct the commenter's attention to § 156.515(c)(2), which requires CO–OPs to comply with a strict tying provision with no market share exception. If a CO–OP participates in a State's small group market, it must offer silver and gold plans on the SHOP.

Comment: One commenter suggested implementing the tying provision but reevaluating the policy in two years. A second commenter suggested the possibility of delaying introduction of the tying provision.

Response: We will be evaluating on an ongoing basis the effectiveness of the tying provision in enhancing employer and employee choice in FF–SHOPs without adversely affecting participation in the FFEs.

We are finalizing these provisions as proposed, with a modification to limit the tying rule to at the applicant issuer itself or an issuer member of the same issuer group that has a 20 percent share of the small group market in the State, based on the most recent earned premium data reported under § 158.110 to fulfill minimum loss ratio reporting requirements.

4. Broker Compensation for Coverage Sold Through an FFE or FF–SHOP

In a new paragraph § 156.200(f), we proposed that QHP certification by an FFE and an FF–SHOP be conditioned on the QHP issuer paying similar broker compensation for QHPs offered through an FFE or FF–SHOP that it would pay for similar health plans offered outside an FFE and an FF–SHOP. We requested comments on whether ''similar health plans'' is a sufficient standard and if not, which factors should be considered in identifying ''similar health plans.'' We also requested comments on how this standard might apply when small

group market product commissions are calculated on a basis other than an amount per employee or covered life or a percentage of premium.

Comment: Multiple commenters representing both consumer groups and issuers supported the compensation proposal, with several recommending that ''similar'' be more clearly defined. One commenter proposed that ''similar'' be defined by the issuer. One commenter opposed the proposal, recommending that the issuer be allowed to set different compensation on and off the Exchange.

Response: For the reasons outlined in the preamble to the proposed rule, we are finalizing these provisions as proposed. We do not at this time propose a specific definition of ''similar.'' We expect to issue further guidance at a later date.

5. Minimum Participation Rate in FF–SHOPs

As discussed the preamble to the proposed rule, we aim to minimize the potential for risk selection in the small group market and in SHOPs. In the final Market Reform Rule, we discussed this issue in connection with section 2702 of the PHS Act, which requires issuers in the individual and group markets to accept every employer and individual that applies for such coverage but permits issuers to limit enrollment in coverage to only open and special enrollment periods. That final rule implements this provision by permitting an issuer offering health insurance coverage in the small group market to limit its offering of coverage to the limited open enrollment periods described in § 147.104(b)(1) in the case of an employer that fails to meet contribution or minimum participation requirements. In connection with the SHOP, the Exchange Establishment final rule permits a SHOP to authorize minimum participation requirements for qualified employers participating in the SHOP so long as the participation is measured at the SHOP level and not based on enrollment in a single QHP.

We proposed a minimum participation rate for an FF–SHOP of 70 percent, calculated at the level of the participation of the employees of the qualified employer in the FF–SHOP and not enrollment in a single QHP. We based the proposed rate on consultations with issuer organizations and regulators about customary minimum participation rates and proposed that it apply to all qualified employers in the FF–SHOP serving a given State. Because State law, regulation, and market practices vary from State to State, we also proposed an option for an FF–SHOP to adopt a different uniform minimum participation rate in a State with a FF–SHOP if there is evidence that:

(1) A State law sets the rate; or

(2) A higher or lower rate is customarily used by the majority of QHP issuers in that State for products in the State's small group market outside the SHOP. In addition, we proposed to exclude employees with certain types of alternative coverage from the calculation of the minimum participation rate:

(1) A group health plan offered by another employer; or

(2) A governmental program such as Medicare, Medicaid, or TRICARE. The preamble, and the proposed regulation text, also acknowledged that imposition of any minimum participation rate would have to be subject to the exception to the guaranteed issue requirements of section 2702 of the PHS Act and the then-pending proposed rule implementing guaranteed issue.

We sought comments on the default minimum participation rate and the exceptions that will help ensure alignment with current State practice and standards inside and outside the SHOP.

Comment: Many commenters were supportive of both setting a default and allowing flexibility to adapt to different states.

Response: We are retaining both the default and the flexibility, as proposed.

Comment: One commenter questioned the necessity of a minimum participation rate given market reforms and suggested using minimum contribution instead.

Response: While the degree of risk segmentation is substantially reduced by market reform, we conclude that a minimum participation rate should be applied, at least in the early years of an FF–SHOP. We have no authority under the Exchange Establishment Rule to set a minimum contribution rate for an FF–SHOP. We note, however, that a minimum participation rate encourages employers to set their contributions toward coverage high enough that the minimum participation rate is achieved.

We are finalizing the provisions as proposed, with minor revisions to the text consistent with the discussion in the preamble. The introductory text at § 155.705(b)(10), as well as the text at subparagraph (b)(10)(i), is amended to include the phrase ''Subject to § 147.104 of this title'' to clarify when and how a minimum participation rate may be imposed under applicable law. Under this final rule, when an FF–SHOP makes the employee choice model available to qualified employers, it will use a consistent minimum participation rate across issuers.

6. Determining Employer Size for Purposes of SHOP Participation

We proposed to amend the definitions of ''small employer'' and ''large employer'' in § 155.20 to specify the method for determining employer size for Exchange purposes and to add the definition of large employer to § 157.20. In determining whether an employer is a small employer for purposes related to the SHOP, we proposed that the full-time equivalent method used in section 4980H(c)(2)(e) of the Code, as added by section 1513 of the Affordable Care Act, be used. We sought comments on the proposed definition.

Comment: Some commenters suggested that each SHOP, including FF–SHOPs, should use State counting methods permanently. Other commenters supported an immediate move to a federal standard counting method that takes all employees into account. One commenter noted that the more comprehensive reference for the counting method used in the IRC would be Section 4980H(c)(2), which includes a provision to exclude certain seasonal employees when determining whether an employer is subject to the shared responsibility provisions.

Response: We believe that the Affordable Care Act requires the use of a counting method that takes part time employees into account, and that the full-time equivalent method used in section 4980H(c)(2)(e) of the IRC is a reasonable method to apply with regard to Exchanges. We have changed the IRC reference from section 4980H(c)(2)(e) to 4980H(c)(2) in response to the comment. We believe that the broader cross-reference is appropriate because it brings here the limit in § 49080H(c)(2)(B) on how certain seasonal employees are counted. We believe that excluding certain seasonal employees when determining whether an employer has more than 50 employees would be closer to counting provisions used in many states and that employers should be able to use the same method to determine SHOP eligibility that they will use to determine whether they will be subject to section 4980H. This method of determining SHOP eligibility will be reevaluated before 2016, when the small group market in all states will consist of employers with from 1 to 100 employees rather than 1 to 50 employees.

Comment: Several commenters recommended that any counting method used to define employer size and thus the corresponding group market should

apply for all ACA purposes, not just for purposes relating to Exchanges.

Response: Based on the scope of the proposed regulations, we are unable to adopt definitions in this Notice that apply beyond the Exchange regulations.

We are finalizing the provisions as proposed, changing the reference to section 4980H(c)(2) of the IRC.

7. Definition of a Full-Time Employee for Purposes of Exchanges and SHOPs

We proposed to add to § 155.20 a definition of full-time employee that cross-references section 4980H(c)(4) of the Code, which provides that a full-time employee with respect to any month is generally an employee who is employed an average at least 30 hours of service per week, subject to the transitional policies discussed in the next paragraph. Under our proposal, this definition would control for purposes of the section 1312(f)(2)(A) requirement that qualified employers offer coverage to all full-time employees.

Comment: Only one commenter addressed the definition of full time employee, suggested that full-time employee be defined as an employee working more than 1300 hours in the past year.

Response: We find no rationale for adopting that definition of a full time employee, and retain instead the definition based on 30 hours a week used elsewhere in the Affordable Care Act.

We are finalizing the definition as proposed.

8. Transitional Policies

With our proposed definitions of large and small employer and full-time employee, for purposes of Exchange and SHOP administration, we proposed policies to provide for a transition from different, existing State law. With respect to State-operated SHOPs for 2014 and 2015 only, we proposed that HHS will not take any enforcement actions against a State-operated SHOP for including a group in the small group market based on a State definition that does not include part-time employees when the group should have been classified as part of the large group market based on the Federal definition. Our proposal did not address application of State-specific definitions or counting rules that would exclude a small group health plan from protections provided under federal law. Similarly, during 2014 and 2015, an employer and a State-operated SHOP may adopt a reasonable basis for their determination of whether they have met the SHOP requirement to offer coverage to all full-time employees, such as the definition of full-time employee from the State's small group market definition or the Federal definition from section 4980H of Chapter 43 of the Code.

Under our proposal, however, each FF–SHOP would use a counting method that takes part-time employees into account. We proposed that these definitions will be effective October 1, 2013 for each FF–SHOP. We requested comments on the proposed definitions and on the proposed transition policies.

Comment: Most commenters supported using State methods, either long term or as a transitional method in 2014–2015. Two commenters supported an immediate move to a federal standard counting method that takes all employees into account.

Response: We conclude that, for purposes relating to the Exchange regulations, the definition of ''full-time employee'' and the definitions of ''small employer'' and ''large employer'' and their associated counting methods using a full-time equivalent (FTE) methodology should be effective for plan years beginning on or after January 1, 2016. During 2014 and 2015, when states have the discretion to choose whether the upper limit of small employer size is 50 or 100, we will exercise enforcement discretion, relying on State methods of determining group size and status as a full-time employee. However, in operating the FF–SHOPs, we do not have the same discretion; for plan years beginning on or after January 1, 2014 and in connection with open enrollment activities beginning October 1, 2013, we will use definitions of full-time employee, small employer, and large employer based on the FTE method of determining group size. Thus, prior to 2016, an FF–SHOP will use the State's choice of 50 or 100 employees, but will count those employees using the full-time equivalent method referenced in the definitions.

We are finalizing the effective dates of the definitions of ''full-time employee,'' ''small employer,'' and ''large employer'' as proposed, with a minor modification to clarify that the definitions will apply to plan years beginning on or after January 1, 2014 and in connection with open enrollment activities beginning October 1, 2013. As the SHOP, including FF–SHOPs, will not provide access to coverage until January 1, 2014, we believe the proposed text may have been subject to unintended ambiguity and are finalizing revised text to eliminate that concern.

9. Web Site Disclosures Relating to Agents and Brokers

We proposed modifications to the Web site disclosure standards relating to brokers in § 155.220(b). Specifically, we proposed a new paragraph (b)(1) that would allow an Exchange or SHOP to limit the display of agent and broker information to include only those licensed agents and brokers who are registered with the Exchange or SHOP and a new paragraph (b)(2) that would specifically adopt this provision for an FFE and an FF–SHOP. We believed that listing only brokers who have registered with the Exchange is in the best interest of the consumer, both because the registration and training helps assure that the agent or broker is familiar with the Exchange policies and application process and because the proposed listing will not contain large numbers of licensed brokers who are not active in the market. We welcomed comments on these proposals.

Comment: Several commenters expressed strong support for the authority to list only registered brokers. One suggested the broader authority to list only those actually selling exchange QHPs. None opposed the proposal.

Response: We are finalizing the regulation as proposed. At this time, we do not propose further limiting the listing based on actual sales.

10. QHP Issuer Standards Specific to SHOP

We proposed modifications to the QHP issuer standards specific to SHOP for enrollment in § 156.285. Specifically, we proposed a technical correction in paragraph (c)(7) such that QHP issuers participating in the SHOP must enroll qualified employees if they are eligible for coverage. This correction aligns SHOP enrollment standards to Exchange enrollment standards.

Comment: One commenter supported the proposed regulation. No other comments were received.

Response: We are finalizing the regulation as proposed.

I. Medical Loss Ratio Requirements Under the Patient Protection and Affordable Care Act

1. Treatment of Premium Stabilization Payments, and Timing of Annual MLR Reports and Distribution of Rebates

In the December 2012 HHS Notice of Benefit and Payment Parameters for 2014 proposed rule (77 FR 73187), we proposed to modify the definition of premium revenue in § 158.130, the formula in § 158.221(c) for calculating an issuer's MLR, and the formula in § 158.240(c) for calculating an issuer's

rebate if the MLR standard is not met, in the current MLR regulation to account for payments and receipts related to the premium stabilization programs. Specifically, we proposed to account for all premium stabilization amounts in a way that would not have a net impact on the adjusted earned premium used in calculating the MLR denominator and rebates. Additionally, we proposed to amend § 158.140(b) to include all premium stabilization amounts (positive or negative) as adjustments to incurred claims in calculating the MLR numerator as provided in § 158.221. We invited comment on this approach. We also indicated in the proposed rule that we considered adopting a methodology under which premium stabilization amounts would have a net impact on the MLR denominator, and invited public comment on that approach as well.

In addition, as discussed in the proposed rule, we proposed to amend § 158.110(b), § 158.240(d), and § 158.241(a)(2) to change the MLR reporting and rebate deadlines, beginning with the 2014 MLR reporting year, to coordinate them with the reporting cycles of the premium stabilization programs. Comments on the proposed timeline were welcomed.

Comment: Most commenters supported our proposal to include risk corridors amounts and reinsurance payments as adjustments to the MLR numerator, but many commenters suggested a change in our proposed approach with respect to reinsurance contributions and all risk adjustment amounts, which these commenters recommended be applied as adjustments to the MLR denominator. With respect to the reinsurance contributions, most commenters expressed the view that these are assessments on issuers that are more properly regarded as assessments or regulatory fees, and consequently should be deducted from premium in MLR and rebate calculations. With respect to risk adjustment, several commenters asserted that because State average premium is used to calculate risk adjustment amounts, MLR and rebate calculations should treat these transfer amounts as adjustments to premium. Two commenters expressed concern that including any premium stabilization amounts in the MLR numerator would reduce rebates. One commenter also suggested that we clarify the rebate calculation example in § 158.240(c)(2) to make it clear that the rebate calculations account for premium stabilization amounts at the aggregation level, rather than at an individual enrollee level.

Response: We recognize commenters' concerns regarding inclusion of risk adjustment amounts in the MLR numerator. However, as noted in the proposed rule, while PHS Act section 2718 provides that premium revenue should ''account for'' collections or receipts for the premium stabilization programs, section 1342(c) of the Affordable Care Act requires that risk corridors calculations treat reinsurance and risk adjustment payments as adjustments to allowable cost. Because the MLR and the risk corridors programs are closely related and rely on the same definitions, there should be consistency between these two programs. Proper functioning of the MLR and premium stabilization programs will be especially important in 2014–2016, the initial years the health insurance market will undergo significant changes. Thus, with respect to premium stabilization amounts other than reinsurance contributions (that is, risk adjustment amounts, risk corridors amounts, and reinsurance payments), we are adopting our proposed approach that these adjustments have a net impact on the MLR numerator. However, we agree with those commenters that stated that reinsurance contributions could reasonably be characterized as fees or assessments deductible from premium in MLR and rebate calculations, and this final rule amends § 158.161(a) accordingly. Additionally, we are making clarifying changes to the rebate calculation example in § 158.240(c)(2) in response to comments.

In sum, this final rule amends the formula for calculating the MLR as follows:

$$MLR = [(i + q - s + n - r)/\{(p + s - n + r) - t - f - (s - n + r)\}] + c$$

Where,

i = incurred claims
q = expenditures on quality improving activities
p = earned premiums
t = Federal and State taxes and assessments
f = licensing and regulatory fees, including transitional reinsurance contributions
s = issuer's transitional reinsurance receipts
n = issuer's risk corridors and risk adjustment related payments
r = issuer's risk corridors and risk adjustment related receipts
c = credibility adjustment, if any.

Issuers must provide rebates to enrollees if their MLRs fall short of the applicable MLR standard for the reporting year. Rebates for a company whose MLR falls below the minimum MLR standard in a given State market will be calculated using the following amended formula:

$$Rebates = (m - a) * [(p + s - n + r) - t - f - (s - n + r)]$$

Where,

m = the applicable minimum MLR standard for a particular State and market
a = issuer's MLR for a particular State and market.

The amendments made by this final rule will be effective for MLR reporting years beginning in 2014.

Comment: Three commenters recommended that HHS include the Federally-facilitated Exchange user fees and user fees assessed on issuers participating in the HHS-operated risk adjustment programs as regulatory fees deductible from premium in MLR and rebate calculations. Two commenters recommended that issuer costs associated with operating risk adjustment data validation systems also be deducted for MLR purposes, either as an addition or offset to the payments or receipts related to the premium stabilization programs, or as regulatory fees or assessments deducted from premium. Three commenters further suggested that fees and/or operational costs related to the premium stabilization programs and Exchanges, that are priced into premium for policy years spanning 2013–2014, and consequently will be partially reflected in 2013 premium, be either deducted or excluded from 2013 premium.

Response: We have previously addressed the deductibility of State and Federal Exchange user fees in sub-regulatory guidance issued on April 20, 2012.[33] We agree with the commenters' suggestion regarding the deductibility of the risk adjustment user fees, and we interpret § 158.161(a) as allowing these user fees to be deducted from premium in MLR and rebate calculations. However, we do not agree with commenters that issuer expenditures on risk adjustment data validation systems, or any other operational costs related to the premium stabilization programs, constitute a regulatory fee or assessment or a transfer under the premium stabilization programs. We do not think that these types of expenditures can be distinguished from issuers' other administrative costs involved in compliance with laws and regulations. We also do not agree with comments suggesting that it would be appropriate to reduce rebates to 2013 enrollees by applying estimated 2014 regulatory fees

[33] CCIIO Technical Guidance (CCIIO 2012–002): Questions and Answers Regarding the Medical Loss Ratio Regulation, Q&A #34 (Apr. 20, 2012), *available at http://cciio.cms.gov/resources/files/mlr-qna-04202012.pdf.*

priced into 2013 premium to 2013 MLR and rebate calculations. PHS Act section 2718 does not provide for estimated regulatory fees for future years to be deducted from premium used in MLR and rebate calculations for the reporting year.

Comment: We received several comments supporting our proposal to extend the MLR and rebate deadlines. Two commenters opposed extending the rebate deadline.

Response: We appreciate the comments regarding the proposed deadlines. As noted in the proposed rule, we recognize both consumers' and policyholders' interests in maintaining the dates for MLR reporting and rebates as close to the June 1 and August 1 dates as possible, as well as issuers' interests in having the necessary data to submit their annual MLR reports and having sufficient time to disburse any rebates. We believe that the proposed deadlines strike a balance between these competing interests. Therefore, this final rule extends the MLR and rebate deadlines in § 158.110(b), § 158.240(d), and § 158.241(a)(2) as proposed in the December 2012 HHS Notice of Benefit and Payment Parameters for 2014 proposed rule (77 FR 73187).

2. Deduction of Community Benefit Expenditures

In the December 2012 HHS Notice of Benefit and Payment Parameters for 2014 proposed rule (77 FR 73187), we proposed to amend § 158.162(b)(1)(vii) to allow an issuer exempt from Federal income tax to deduct both State premium taxes and community benefit expenditures from earned premium in MLR and rebate calculations. The proposal limited the community benefit expenditure deduction available to a tax exempt issuer to the higher of (1) the highest premium tax rate in the State; or (2) 3 percent of premium, ensuring a level playing field. The proposed amendment would not change the treatment of State premium taxes and community benefit expenditures for those issuers that are not exempt from paying Federal income tax.

Comment: Several commenters suggested that the proposed treatment is unnecessary and would give Federal income tax exempt entities a competitive advantage. These commenters suggested that tax-exempt entities have sufficient advantages stemming from their favored tax treatment. These commenters further asserted that the deduction of community benefit expenditures should not depend on an issuer's tax status because such funds are not available to be used on subscribers' claims. The commenters proposed either allowing any issuer to deduct all taxes and community benefit expenditures, or eliminating the community benefit expenditure deduction.

In contrast, most other commenters agreed that a Federal income tax exempt issuer is required to make community benefit expenditures to maintain its Federal income tax exempt status and supported the deduction of both State premium taxes and community benefit expenditures from earned premium for such issuers. These commenters agreed that the proposed treatment levels the MLR playing field and would allow a Federal income tax exempt issuer to deduct its community benefit expenditures in the same manner that a for-profit issuer is allowed to deduct its Federal income taxes.

Response: We agree that, because an issuer that is exempt from Federal income taxes must make community benefit expenditures, such an issuer should be allowed to deduct community benefit expenditures and State premium taxes. This final rule allows a Federal income tax exempt issuer to deduct its community benefit expenditures in the same manner that another issuer is allowed to deduct its Federal income taxes. This rule does not alter the community benefit expenditure deduction currently available to an issuer that is not exempt from Federal income taxes. Such issuers are allowed to deduct the higher of (1) their State premium taxes or (2) their community benefit expenditures limited to the highest premium tax rate charged to an issuer in the State. This final rule accordingly amends § 158.162(b)(1)(vii) as proposed in the December 2012 HHS Notice of Benefit and Payment Parameters for 2014 proposed rule (77 FR 73187). We note that the amount of community benefit expenditures deducted is not allowed to exceed the amount of actual community benefit expenditures in the reporting year.

Comment: One commenter suggested that the proposed community benefit expenditure deduction could lead to abuse, while another suggested that the deduction limit was speculative. However, most commenters agreed with the proposed community benefit expenditure limit.

Response: In its MLR model rule, the National Association of Insurance Commissioners (NAIC) adopted and limited the community benefit deduction to the State premium tax rate. We adopted the NAIC methodology in the December 1, 2010 interim final rule (75 FR 74864, as amended), and comments in response to it noted that some States do not subject every type of issuer to State premium taxes and the community benefit deduction might not be available to those tax exempt issuers. In balancing the availability of the deduction and the potential for abuse, this final rule implements the community benefit expenditure deduction cap of the highest of (1) 3 percent of premium, or (2) the highest premium tax rate charged in the State, as proposed in the December 2012 HHS Notice of Benefit and Payment Parameters for 2014 proposed rule (77 FR 73187).

3. Summary of Errors in the MLR Regulation

In the December 2012 HHS Notice of Benefit and Payment Parameters for 2014 proposed rule (77 FR 73187), we proposed to correct three errors in the December 1, 2010 interim final rule (75 FR 74864, as amended): the date by which issuers must define the formula they use for the blended rate adjustment, described in § 158.140(b)(5)(i); the date after which partially-credible issuers that consistently fail to meet the MLR standard will not be allowed to use a credibility adjustment, described in § 158.232(d); and the calculation of the per-person deductible described in § 158.232(c)(1)(i).

Comment: We received one comment regarding our proposed correction to § 158.232(d). The commenter recommended that an issuer that fails to meet the MLR standard for four or more consecutive years be penalized only once every three years. The commenter stated that after an issuer fails to meet the MLR standard for three consecutive years (the statistical probability of which is generally 50 percent x 50 percent x 50 percent, or 12.5 percent), the probability of it failing to meet the MLR standard for the fourth consecutive year is 50 percent.

Response: We disagree with the commenter's calculation. The commenter is correct that the statistical probability of an issuer failing to meet the MLR standard in any given year may be 50 percent. However, the probability of an issuer failing to meet the MLR standard for a number of consecutive years is 50 percent − n, where n is the number of years. Consequently, the probability of an issuer failing to meet the MLR standard for four consecutive years is 6.25 percent, and for five consecutive years it is 3.125 percent. With each additional year, the probability of an issuer failing to meet the MLR standard due to statistical fluctuations continues to shrink, increasingly indicating an intentional pricing below the MLR standard.

This final rule therefore implements the technical corrections to § 158.140(b)(5)(i), § 158.232(d), and § 158.232(c)(1)(i) as proposed in the December 2012 HHS Notice of Benefit and Payment Parameters for 2014 proposed rule (77 FR 73187).

Comment: We received several comments suggesting that HHS clarify the MLR treatment of State high-risk pool assessments, events occurring after MLR reporting deadlines, and cost-sharing reductions. We also received one comment suggesting a larger adjustment for fraud prevention activities, an extension of allowable ICD–10 costs to the 2013 reporting year, and inclusion of all-payer claims databases in quality improving activities.

Response: The matters discussed in these comments are not within the scope of this final rule. However, we will continue to consider the need to issue clarifying guidance regarding the various accounting and actuarial elements affecting MLR and rebate calculations.

IV. Provisions of the Final Regulations

For the most part, this final rule incorporates the provisions of the proposed rule. Those provisions of this final rule that differ from the proposed rule are as follows:

A. Provisions for the State Notice of Benefit and Payment Parameters

- We are not amending § 153.100(c) to provide that, if a State is required to publish an annual State notice of benefit and payment parameters for benefit year 2014, it must do so by the 30th day following the publication of the final HHS notice of benefit and payment parameters.

B. Provisions and Parameters for the Permanent Risk Adjustment Program

- We are modifying the requirement at § 153.360 to clarify that small group market plans will be risk adjusted in the State in which the employer's policy was filed and approved.
- We are adding § 153.610(f) to describe the risk adjustment user fees.

C. Provisions and Parameters for the Transitional Reinsurance Program

- We are amending the definition of ''contributing entity'' in § 153.20 to include clarifying language that a contributing entity is a health insurance issuer or a self-insured group health plan.
- We are amending § 153.100(a)(2) by replacing the cross-reference to § 153.220(d) with § 153.220(d)(1). We are making corresponding revisions in § 153.100(d)(2); and § 153.110(b); 153.400(a).
- We are deleting § 153.220(d)(2), which required a State to notify HHS within 30 days after publication of the draft annual HHS notice of benefit and payment parameters for the applicable benefit year of the additional contribution rate that it elects to collect.
- We are revising § 153.230(a) by replacing non-grandfathered individual market plan with reinsurance-eligible plan.
- We are revising § 153.230(c) to clarify that national reinsurance payments are calculated as the product of the national coinsurance rate multiplied by the health insurance issuer's claims costs for an individual enrollee's covered benefits that the health insurance issuer incurs in the applicable benefit year.
- We are revising § 153.232(c) by replacing non-grandfathered individual market plan with reinsurance-eligible plan and clarifying that the incurred claims costs for an individual enrollee's covered benefits are those incurred in the applicable benefit year.
- We are revising § 153.232(d) by clarifying that reinsurance payments will be calculated with respect to an issuer's incurred claims costs for an individual enrollee's covered benefits incurred in the applicable benefit year.
- We are revising § 153.235(a) to provide that HHS will allocate and disburse to each State operating reinsurance (and will distribute directly to issuers if HHS is operating reinsurance on behalf of a State), reinsurance contributions collected from contributing entities under the national contribution rate for reinsurance payments. The disbursed funds would be based on the total requests for reinsurance payments made under the national reinsurance payment parameters in all States and submitted under § 153.410, net of any adjustment under § 153.230(d).
- We are amending § 153.240(b)(2) to clarify that a State must provide to an issuer of a reinsurance-eligible plan the calculation of the total reinsurance payments requested, on a quarterly basis during the applicable benefit year in a timeframe and manner determined by HHS, made under the national reinsurance payment parameters and State supplemental reinsurance payment parameters.
- We are amending § 153.400 to clarify that each contributing entity must make reinsurance contributions annually at the national contribution rate for all reinsurance contribution enrollees, in a manner specified by HHS.
- We are amending § 153.400(a)(1)(iii) to exclude from reinsurance contributions expatriate health coverage, as defined by the Secretary.
- We are amending § 153.400(a)(1) by adding paragraph (iv) to exempt employer-provided health coverage, when such coverage applies to individuals with respect to which benefits under Title XVIII of the Social Security Act (Medicare) are primary under the Medicare Secondary Payor rules under section 1862(b) of the Social Security Act.
- We are amending § 153.400(a)(2) by adding paragraph (xiii) to exempt a self-insured group health plan or health insurance coverage that is limited to prescription drug benefits from reinsurance contributions.
- We are revising § 153.405(a)(1), § 153.405(b) and § 153.405(d) by deleting ''average'' to clarify that reinsurance contributions are calculated by multiplying the number of covered lives of reinsurance contribution enrollees during the applicable benefit year for all contributing entities by the national contribution rate, pursuant to § 153.405(a).
- We are amending § 153.405(c) to provide that HHS will notify contributing entities of the reinsurance contribution amount to be paid for the applicable benefit year within 30 days of submission of the annual enrollment count.
- We are amending § 153.405(f) to revise the procedures for counting covered lives for group health plans with a self-insured coverage option and an insured coverage option.
- We are amending § 153.405(g) to revise the aggregation of multiple group health plans maintained by the same plan sponsor.
- We are amending § 153.405(g)(3) to clarify that a plan sponsor is not required to include as part of a single group health plan any group health plan that consists solely of excepted benefits, that only provide prescription drugs benefits, or that is an HRA, HSA, or FSA.
- We are amending § 153.410(a) to clarify that an issuer of a reinsurance-eligible plan may make requests for reinsurance payments when an issuer's claims costs for an enrollee of that reinsurance-eligible plan has met the criteria for reinsurance payments in 45 CFR subpart B and this final rule and where applicable the State notice of benefit and payment parameters.

D. Provisions for the Temporary Risk Corridors Program

- We are modifying our proposed definition of ''taxes'' in § 153.500, by

replacing the term ''taxes'' with the term ''taxes and regulatory fees.'' We are clarifying that reinsurance contributions are included within the definition of ''taxes and regulatory fees'' in § 153.500.

• We are amending § 153.520 to remove references to reinsurance contributions in paragraph (d).

• We are also deleting § 153.530(b)(1)(ii) and amending § 153.530(b)(1) to eliminate the adjustment to allowable costs for reinsurance contributions made by an issuer, and are clarifying the treatment of community benefit expenditures within the risk corridors calculation.

E. Provisions for the Advance Payment of the Premium Tax Credit and Cost-Sharing Reduction Programs

• We are finalizing the provisions in § 155.330(g) substantially as proposed, with modifications to the language to increase clarity.

• We are adding additional language at § 155.340(e) to allow Exchanges greater flexibility in allocating the advance payment of the premium tax credit if one or more individuals in a tax household enroll in more than one policy through the Exchange. We also clarify our language in regard to tax filers covered by the same plan(s). In addition, we are adding paragraph (f) in which we specify the methodology that will be used for allocating advance payments of the premium tax credit provided through Federally-facilitated Exchanges.

• We are relabeling § 155.340(f) as § 155.340(g).

• We are making a minor technical correction at § 155.1030(a).

• We are making clarifying revisions to the provisions at § 155.1030(a) and (b)(2), § 156.420(a) and (b), § 156.430(a)(2), and 156.470(a), (b), and (e) to standardize language across the final rule.

• We are adding paragraph (c) to § 155.1030, paragraph (g) to § 156.420, paragraph (a)(4) to § 156.430, and paragraph (f) to § 156.470 to clarify the application of these provisions to issuers of multi-State plans.

• We are substituting § 156.140(c) for § 156.140(c)(1) as the cross-reference for the term ''de minimis variation'' in § 156.400.

• We are making a clarifying revision to the provision at § 156.410(a).

• We are modifying the provisions at § 156.430(b) to permit HHS to adjust the cost-sharing reduction advance payments if the QHP issuer demonstrates that the cost-sharing reductions provided are likely to differ significantly from the advance payment amounts.

• We are modifying paragraph (c)(1) and (2) of § 156.430, reserving paragraphs (c)(3) and (4), and adding paragraph (c)(5). The modified structure of § 156.430(c) will allow for the amendments established in the interim final rule with comment published elsewhere in this issue of the **Federal Register**.

• We are adding paragraph (g) to § 156.430 to provide that if an Indian is enrolled in a QHP in the individual market through an Exchange and is furnished an item or service directly by the Indian Health Service, an Indian Tribe, Tribal Organization, or Urban Indian Organization, or through referral under contract health services, the QHP issuer may not reduce the payment to any such entity for such item or service by the amount of any cost sharing that would be due from the Indian but for the prohibitions on cost sharing set forth in § 156.410(b)(2) and (3).

• We are making minor technical corrections to paragraphs (a) and (c) of § 156.440 to clarify the cross-references.

• We are deleting paragraphs (d)(2) through (4) of § 156.470, relating to certain allocation standards for stand-alone dental plans.

F. Provisions on User Fees for a Federally-Facilitated Exchange (FFE)

• We are removing the reference to billable enrollees, so that the user fee rate is applied directly to the premium set by the issuer.

G. Distributed Data Collection for the HHS-Operated Risk Adjustment and Reinsurance Programs

• We are finalizing the proposed provisions.

H. Small Business Health Options Program

• In § 155.20, the definitions of ''full-time employee,'' ''small employer,'' and ''large employer,'' we are clarifying the effective date for use of these definitions. In addition, in the definition of ''large employer,'' we are correcting the word ''larger'' to ''large.''

• In § 155.705(b)(3)(ii), we are adding a provision requiring each FF–SHOP to allow qualified employers the choice of offering employees either all QHPs at a single level of coverage selected by the employer or, as a transition policy, a single QHP selected by the employer.

• We are revising § 155.705(b)(10) to include language limiting authority to impose a minimum participation rate subject to 45 CFR 147.104.

• In § 155.705(b)(11)(ii), we are deleting a provision at subparagraph (D) requiring each FF–SHOP to allow employers to define different contribution percentages for different employee categories and relabeling the remaining subparagraphs accordingly.

• We are finalizing § 156.200(g) with modifications in new subparagraph (g)(3) so that the QHP certification standard relating to participation in the FFE and FF–SHOP does not apply if neither the issuer nor any other issuer in the issuer group has a market share of the State's small group market greater than 20 percent, as determined using information submitted pursuant to 45 CFR 158.110.

I. Medical Loss Ratio Requirements Under the Patient Protection and Affordable Care Act

• We are amending the MLR formula to subtract reinsurance contributions from earned premium as regulatory fees, instead of treating them as an addition to incurred claims.

V. Collection of Information Requirements

Under the Paperwork Reduction Act of 1995 (PRA), we are required to provide 30-day notice in the **Federal Register** and solicit public comment before a collection of information requirement is submitted to the Office of Management and Budget (OMB) for review and approval. To fairly evaluate whether an information collection should be approved by OMB, section 3506(c)(2)(A) of the Paperwork Reduction Act of 1995 requires that we solicit comment on the following issues:

• The need for the information collection and its usefulness in carrying out the proper functions of our agency.

• The accuracy of our estimate of the information collection burden.

• The quality, utility, and clarity of the information to be collected.

• Recommendations to minimize the information collection burden on the affected public, including automated collection techniques.

The following sections of this document contain estimates of paperwork burden; however, not all of these estimates are subject to the information collection requirements (ICRs) under the PRA for the reasons noted.

A. Collections Related to State Operation of Reinsurance & Risk Adjustment Programs (§ 153.210 Through § 153.240, § 153.310)

In sections § 153.210 through § 153.240 and § 153.310 of the proposed rule, we estimated the cost of collecting data for State-operated reinsurance and risk adjustment. Fewer than 10 States have told HHS that they will operate reinsurance or risk adjustment for the

2014 benefit year. Since collections from fewer than 10 persons are exempt from the PRA under 44 U.S.C. 3502(3)(A)(i), we are not seeking PRA approval for these information collection requirements. However, if more than nine States elect to operate risk adjustment in the future, we will seek PRA approval for these information collections.

Comment: One commenter stated that our administrative cost estimates for these provisions were too low to be credible. Another commenter stated that we underestimated the cost to States of administering supplemental reinsurance payment parameters and monitoring fund balances. In particular, the commenter stated that establishing a governing board, engaging with stakeholders, and hiring independent actuaries would be expensive. One commenter believed that the cost to submit a report should include the State's costs for executive-level review to determine whether to operate reinsurance, and that HHS was confusing regulatory cost with the PRA's information collection burden.

Response: We limited our estimates in the proposed rule to the incremental information collection associated with the requirements of these provisions. In the ''Supporting Statement for Paperwork Reduction Act submissions: Standards related to Reinsurance, Risk Corridors, and Risk Adjustment'' (Premium Stabilization Rule Supporting Statement), we estimated a baseline cost for the development of the State notice of benefit and payment. Therefore, we believe that there will only be a small incremental cost to States as a result of the reporting requirements at § 153.210 through § 153.240, § 153.310. However, for reasons described earlier in this Collection of Information section, we are not seeking PRA approval for these collections. We have moved our discussion of the administrative costs associated with these provisions to the Regulatory Impact Analysis section of this final rule.

B. ICRs Regarding Calculation of Reinsurance Contributions (§ 153.405)

In § 153.405, we finalize the rules related to an annual enrollment count of covered lives by contributing entities using counting methods derived from the PCORTF Rule. We are requiring contributing entities to provide annual counts of their enrollment and remit reinsurance contributions to HHS based on that enrollment count. The work associated with this requirement is the time and effort required by an issuer or self-insured group health plan to derive an annual enrollment count. Because issuers or self-insured group health plans will already be obligated to determine a count of covered lives using a PCORTF counting method, the cost associated with this requirement is conducting these counts using the slightly modified counting methods specified in this final rule. In this final rule, we are modifying our estimate of the number of contributing entities from the proposed rule. We estimate that 22,900 contributing entities will be subject to this requirement, based on the Department of Labor's estimated count of self-insured plans and the number of fully insured issuers that we estimate will make reinsurance contributions.[34] On average, we estimate it will take each issuer or self-insured group health plan 1 hour (at a wage rate of $55 for an operations analyst) to calculate and submit final enrollment counts to HHS. Therefore, we estimate an aggregate cost of $1,259,500 for 22,900 reinsurance contributing entities as a result of this requirement. We will revise the Premium Stabilization Rule Supporting Statement to include the required data elements that issuers or self-insured group health plans will need to submit their annual enrollment counts in accordance with the counting methodology established in this final rule.

C. Requests for Reinsurance Payment (§ 153.410)

As described in § 153.410, issuers of reinsurance-eligible plans seeking reinsurance payments must make requests in accordance with the requirements of this final rule or the State notice of benefit and payment parameters, as applicable. To be eligible for reinsurance payments, issuers of reinsurance-eligible plans must submit or make accessible to HHS or the State, as applicable, all necessary data to be considered for reinsurance payments for the applicable benefit year.

To minimize burden on issuers, HHS intends to collect data in an identical manner for HHS-operated reinsurance programs and HHS-operated risk adjustment. Although we clarified the data elements issuers would be required to submit as part of the reinsurance payment request process, the burden associated with this requirement is already accounted for under the Premium Stabilization Rule Supporting Statement with an October 31, 2015 expiration date, and we will update it to reflect these clarified data elements.

D. Upload of Risk Adjustment and Reinsurance Data (§ 153.420, § 153.700, § 153.710, § 153.720)

Under the HHS-operated risk adjustment and reinsurance programs, HHS will use a distributed data collection approach for enrollee-level enrollment, claims and encounter data that reside on an issuer's dedicated data environment. Under § 153.710(a), an issuer of a risk adjustment covered plan or a reinsurance-eligible plan in a State where HHS is operating the risk adjustment or reinsurance on behalf of the State, as applicable, must provide HHS, through the dedicated data environment, access to enrollee-level plan enrollment data, enrollee claims data, and enrollee encounter data, as specified by HHS. Under § 153.710(b), all claims data submitted by an issuer of a risk adjustment covered plan or a reinsurance-eligible plan in a State in which HHS is operating risk adjustment or reinsurance, as applicable, must have resulted in payment by the issuer. Under § 153.710(c), an issuer of a risk adjustment covered plan or a reinsurance-eligible plan in a State in which HHS is operating risk adjustment or reinsurance, as applicable, that does not generate individual enrollee claims in the normal course of business must derive costs on all applicable provider encounters using its principal internal methodology for pricing those encounters.

Issuers will be directed to make risk adjustment and reinsurance data accessible to HHS in a way that conforms to HHS-established guidelines and applicable standards for electronic data collection and submission, storage, privacy and security, and processing. In § 153.720(a), we require these issuers to establish a unique masked enrollee identification number for each enrollee, in accordance with HHS-defined requirements and maintain the same masked enrollee identification number for enrollees that enroll in different plans within the issuer, within the State, during a benefit year. Issuers must provide all data to HHS in the specified formats, and must correct submitted files to resolve problems detected by HHS during file processing. The cost associated with this requirement is the time and effort to ensure that information in the dedicated data environment complies with HHS requirements. We estimate this will affect 1,800 issuers and will cost each issuer approximately $178 per year, reflecting three hours of work by a

[34] We use an estimate of self-insured entities published by the Department of Labor in the April 2012 ''Report to Congress: Annual Report of Self-insured Group Health Plans,'' which reflects only those self-insured health plans (including 14,800 self-insured plans and 6,300 plans that mixed self-insurance and insurance) that are required to file a Form 5500 with the Department of Labor.

technical employee at $59.39 per hour. Therefore, we estimate an aggregate cost of $320,706 for all issuers as a result of these provisions.

In addition, we discussed in the proposed rule an updating amendment to the Premium Stabilization Rule Supporting Statement that was approved with an October 31, 2015 expiration date reflecting updated cost estimates for implementing the distributed data approach. We are making a slight modification to the labor estimate we assumed in our proposed rule by assuming Federal holidays and two weeks of vacation time for full time employees. In this final rule, we estimate that this data submission requirement will affect 1,800 issuers, and will cost each issuer approximately $342,086 in total labor costs. This cost reflects an estimate of three full-time equivalent employees (5,760 hours per year) at an average hourly rate of $59.39 per hour. We anticipate that approximately 400 data processing servers will be established across the market in 2014 (at an average cost of $15,000), and these servers will process approximately 9 billion claims and enrollment files. Therefore, we estimate an aggregate cost that includes labor and capital of $621,754,800 for all issuers as a result of these provisions. Although we had previously accounted for this estimate as a new administrative cost to issuers in the proposed rule, we are not doing so in this final rule because it is not an incremental cost that issuers will incur as a result of the provisions in this final rule. We had previously estimated the costs associated with these risk adjustment and reinsurance enrollment data submission requirements in the Premium Stabilization Rule Supporting Statement that was approved with an October 31, 2015 expiration date. We will revise that supporting statement to reflect our updated estimate. We are also amending the tables in the Collection of Information section and Regulatory Impact Analysis section of this final rule so that the tables reflect only those incremental costs that result from provisions of this final rule.

Comment: One commenter stated that there was no basis for the proposed estimate and that the values seemed low considering the importance and complexity of the tasks involved. The commenter also believed that the estimate did not account for costs associated with overhead, administrative tasks, and employee benefits.

Response: We believe that our proposed estimate is reasonable for first year operations. The estimate reflects average labor and capital costs associated with standing up a dedicated data environment, as well as average claims volume. Some issuers will have appropriate staff and infrastructure in place to support the data collection and other issuers will need to acquire resources. While we anticipate an initial concentrated effort for set-up of the dedicated data environment, we believe that three full-time equivalents would cover the number of hours needed (on average) for set-up and maintenance in the first year of operations. The average hourly rate of $59.39 is based on the Bureau of Labor Statistics, U.S. Department of Labor, *National Compensation Survey: Occupational Earnings in the United States, 2011.* We note that it approximates the lower range of hourly wages, $60, estimated by respondents to a recent industry survey,[35] and that industry respondents' cost estimates ranged widely to reflect different pricing and conditions. Our aggregate cost estimate also includes costs associated with capital purchases, overhead, and fringe benefits.

E. ICR Regarding User Fee When HHS Operates Risk Adjustment (§ 153.610)

Under § 153.610(f), we establish a user fee to support Federal operation of risk adjustment. This per capita monthly fee will be charged to issuers of risk adjustment covered plans based on enrollment estimates provided to HHS in the distributed data environment. HHS will calculate user fees owed, and issuers will remit the fee owed only once, in June of the year following the benefit year, in connection with processing of payments and charges for risk adjustment.

We estimate that 1,800 issuers will be required to pay risk adjustment user fees, and the additional cost associated with this requirement is the time and effort for an issuer to provide monthly enrollment data and remit fees. Because HHS will utilize existing data collection and payments and charges processing, we do not anticipate that this provision will alter the collection cost that is already approved in the Premium Stabilization Rule Supporting Statement under OMB control number 0938–1155 with an October 31, 2015 expiration date.

F. ICRs Regarding Data Validation Requirements When HHS Operates Risk Adjustment (§ 153.630)

Under § 153.630(b), an issuer that offers at least one risk adjustment covered plan in a State where HHS is operating risk adjustment on behalf of the State for the applicable benefit year must have an initial validation audit performed on its risk adjustment data. The cost associated with this requirement is the issuer's time and effort to provide HHS with source claims, records, and enrollment information to validate enrollee demographic information for initial and second validation audits and the issuer's cost to employ an independent auditor to perform the initial validation audit on a statistically valid sample of enrollees.

The statistically valid sample of enrollees provided to each issuer will consist of enrollees both with and without HCCs. We estimate that each issuer sample will consist of approximately 300 enrollees, with approximately two-thirds of the sample consisting of enrollees with HCCs. We anticipate that this audit will affect approximately 1,800 issuers.

Based on Truven Health Analytics 2010 MarketScan® data, we have determined that for enrollees with HCCs, the average number of HCCs to be reviewed by an auditor per enrollee is approximately two. Additionally, based on HHS audit experience, we estimate that it will cost approximately $180 ($90 per hour for two hours) for an auditor to review the medical record documentation for one enrollee with two HCCs. In the proposed rule, we did not estimate the cost of reviewing medical records for enrollees without HCCs. HHS intends to require the review of medical records for all sample enrollees in the initial validation audit. Therefore, we are revising our estimate to align with the policy finalized in this rule. We expect that it may cost approximately $60 per enrollee ($90 per hour for 40 minutes) to validate demographic information and review medical records for all enrollees in the audit sample, totaling approximately $210 per enrollee with HCCs ($90 per hour for two hours and 20 minutes) and $60 per enrollee with no HCCs. We assume that an initial validation audit will be performed on 180,000 enrollees without HCCs, and 360,000 enrollees with HCCs. Based on the information above, we estimate that the total cost per issuer to retain initial validation auditors to perform the initial validation would cost approximately $48,000. Therefore, for 1,800 issuers, the total cost of conducting initial validation audits will be $86.4 million. We will revise the information collection currently approved OMB Control Number 0938–1155 with an October 31,

[35] "Health Plans' Estimated Costs of Compliance with Expanded Federal Rate Review and with Data Collection for Risk Adjustment and Reinsurance," Center for Policy Research, America's Health Insurance Plans, December 2012.

2015 expiration date to account for this additional burden.

Under § 153.630(d), issuers will have the opportunity to appeal errors identified through the second validation audit process. Because we intend to provide further detail on this process in later guidance and rulemaking, we currently cannot estimate the number of issuers that will appeal HCC findings, or the cost per issuer for doing so. Therefore, we will seek OMB approval and solicit public comment on the information collection requirements established under § 153.630(d) at a future date.

G. ICRs Regarding QHP Certification Standards Related to Advance Payments of the Premium Tax Credit and Cost-Sharing Reductions (§ 155.1030)

In § 155.1030(a)(1) of this final rule, we establish that the Exchange must ensure that each issuer that offers or intends to offer a QHP in the individual market on the Exchange submit the required plan variations, as set forth in § 156.420, for each of its health plans proposed to be offered as a QHP in the individual market on the Exchange. Further, the Exchange must certify that the plan variations meet the requirements detailed in § 156.420. We expect that an Exchange will collect prior to each benefit year the information necessary to validate that the issuer meets the requirements for silver plan variations, as detailed in § 156.420(a), and collect as part of QHP certification the information necessary to validate that the issuer meets the requirements for zero and limited cost sharing plan variations, as detailed in § 156.420(b). We expect that this data collection would include the cost-sharing requirements for the plan variations, such as the annual limitation on cost sharing, and any reductions in deductibles, copayments or coinsurance. In addition, the Exchange will collect or calculate the actuarial values of each QHP and silver plan variation, calculated under § 156.135 of the final EHB/AV Rule. We proposed in § 155.1030(a)(2) that the Exchange provide the actuarial values of the QHPs and silver plan variations to HHS. As set forth in § 155.1030(b)(4), HHS may use this information in connection with approving estimates for advance payment of cost-sharing reductions submitted by issuers under § 156.430 finalized here. Because HHS will already have this information for Federally-facilitated Exchanges, the burden associated with this requirement is the time and effort for a State participating in each State Partnership and for a State-based Exchange to submit this information to HHS. We estimate that the submission from each of these entities will take approximately 3.5 hours to collect, validate, and submit to HHS (3 hours by a database administrator at $47.70 per hour, and 0.5 hours by a manager at $75.15 per hour). We estimate that this will cost each submitting entity approximately $181 per year. We plan to revise the supporting statement published under CMS form number 10433, which is pending OMB approval, to account for this additional burden.

In paragraph (b)(1) and (2), we established that the Exchange collect, review, and submit the rate or expected premium allocation, the expected allowed claims cost allocation, and the actuarial memorandum that a metal level health plan or stand-alone dental plan issuer submits under § 156.470. This collection will allow for the calculation of the advance payments of cost-sharing reductions and the premium tax credit. The Exchange must ensure that such allocations meet the standards set forth in § 156.470(c) and (d). This allocation information must be collected and approved before a health plan or stand-alone dental plan can be certified for participation in the Exchange. We expect that the Exchange will collect the allocation information in conjunction with the rate and benefit information that the issuer submits under § 156.210 or the rate information that the QHP issuers submits through the Effective Rate Review program. Therefore, we believe that the cost for Partnership Exchanges or State-based Exchanges to submit to HHS this information collected from QHPs is generally part of the cost that is accounted for in the PRA approved under OMB Control Number 0938–1141 or the cost that is accounted for in the supporting statement published under CMS form number 10433, which is pending OMB approval. We estimate that Partnership and State-based Exchanges will incur additional cost to submit allocation information to HHS for stand-alone dental plans. We estimate that it will take each Exchange 30 minutes to submit this information for each stand-alone dental plan, and assume that this submission will be performed at the hourly wage rate of $38.49 for an insurance analyst. Assuming 20 stand-alone dental plans across the market, we estimate an aggregate cost of approximately $385 for all Partnership or State-based Exchanges to submit this information to HHS. We plan to revise the supporting statement published under CMS form number 10433, which is pending OMB approval, to account for this additional burden.

In subparagraph (b)(3), we establish that the Exchange must collect any estimates and supporting documentation that a QHP issuer submits to receive advance payments of certain cost-sharing reductions, as described in § 156.430(a), and submit, in the manner and timeframe established by HHS, the estimates and supporting documentation to HHS for review. Because HHS will already have this information for Federally-facilitated Exchanges, the burden associated with this requirement is the time and effort for each Partnership or State-based Exchange to submit this information. We believe that this provision will impose minimal burden, and that it will take an insurance analyst five minutes (at an hourly wage rate of $38.49), to collect and submit this information to HHS for each Partnership or State-based Exchange. Therefore, we estimate a cost of $3.21 for each Partnership or State-based Exchange as a result of this requirement.

H. ICRs Regarding Plan Variations (§ 156.420)

In § 156.420, we set forth standards for issuers to submit to the Exchange for certification the variations of the health plans that they offer or propose to offer in the individual market on the Exchange that include the required levels of cost-sharing reductions. We provide an overview of the submission process associated with this requirement in this final rule. In paragraph (a), we establish that, for each silver health plan that an issuer offers or intends to offer in the individual market on the Exchange, the QHP issuer must submit to the Exchange for certification the standard silver plan and three variations of the standard silver plan. In paragraph (b), we further establish that a QHP issuer must, for each of its health plans at any metal level of coverage, submit a zero cost sharing plan variation and a limited cost sharing plan variation of each health plan offered or proposed to be offered in the individual market on the Exchange. However, in this final rule, we clarify that an Exchange is adequately enforcing this requirement if, within a set of standard plans offered by an issuer that differ only by the cost sharing or premium, it allows an issuer to submit one zero cost sharing plan variation for only the standard plan with the lowest premium within the set. Although this approach will likely reduce the burden on issuers and Exchanges, it is unclear how many Exchanges will adopt this approach, and

as a result, we have not adjusted our burden estimates below.

We estimate that 1,200 issuers will participate in an Exchange nationally, and that each issuer will offer one QHP per metal level with four zero cost sharing plan variations and four limited cost sharing plan variations (one per metal level QHP) and three plan variations for low-income populations, for a total of four standard plans and eleven plan variations. Our estimate assumes that each issuer will submit these plan variations as part of their electronic QHP application, which is described in further detail in the ''Supporting Statement for Initial Plan Data Collection to Support QHP Certification and other Financial Management and Exchange Operations,'' which was provided for public comment on November 21, 2012 (77 FR 69846). We estimate that it will take approximately 1.5 hours to submit the requisite information for a plan variation (0.75 hours by an actuary at a wage rate of $56.89, 0.5 hours by an insurance analyst at a wage rate of $38.49, and 0.25 hours by an insurance manager at a wage rate of $67.44). Based on the figures above, we estimate it will cost each issuer approximately $866 to submit 11 plan variations annually, for an aggregate cost of $1,039,698 for all issuers participating in the Exchanges. We plan to revise the supporting statement published under CMS form number 10433, which is pending final OMB approval, to account for this additional burden.

I. ICRs Regarding Payment of Cost-Sharing Reductions (§ 156.430)

In § 156.430(a)(1), we establish that for each silver plan variation and zero cost sharing plan variation that an issuer offers or proposes to offer in the individual market on the Exchange, the QHP issuer must provide to the Exchange, for approval by HHS, estimates, and supporting documentation validating the estimates, of the dollar value of cost-sharing reductions to be provided. However, as described in the preamble to this final rule, we are finalizing a simplified methodology for calculating the advance payments for the initial years of the cost-sharing reduction program. This methodology will utilize data that QHP issuers submit for other requirements, such as § 156.420 and § 156.470. As a result, there will be no additional burden associated with this requirement for QHP issuers.

In § 156.430(a)(2), we discuss the process for estimating the value of cost-sharing reductions to be provided under the limited cost sharing plan variation open to Indians with a household income above 300 percent of the FPL, described in § 156.420(b)(2). If a QHP issuer seeks advance payments for these cost-sharing reductions, the issuer must provide to the Exchange, for approval by HHS, an estimate, and supporting documentation validating the estimate, of the dollar value of the cost-sharing reductions to be provided under the limited cost sharing plan variation of the QHP. We estimate that 1,200 issuers will participate in Exchanges nationally, and that each issuer will offer one QHP per metal level, with one limited cost sharing plan variation for each metal level. For each plan variation, the issuer may submit an estimate and supporting documentation of the dollar value of the cost-sharing reductions. We expect estimates and supporting documentation will be submitted as part of the electronic QHP application, which is described in further detail in the ''Supporting Statement for Initial Plan Data Collection to Support QHP Certification and other Financial Management and Exchange Operations,'' which was provided for public comment on November 21, 2012 (77 FR 69846). We estimate that it will take approximately one hour to submit each response for a plan variation (0.5 hours by an actuary at a wage rate of $56.89 and 0.5 hours by an insurance analyst at a wage rate of $38.49.) We estimate that each response for a plan variation will cost an issuer $47.69, for an estimated total issuer cost to submit responses for four plan variations of $228,912 for the year. We plan to revise the supporting statement published under CMS form number 10433, which is pending final OMB approval, to account for this additional burden.

In § 156.430(c)(1), (c)(2), and (c)(5), we finalize a standard that directs a QHP issuer to submit to HHS, in the manner and timeframes established by HHS, the actual amount of cost-sharing reductions provided to each enrollee. This information is necessary so that HHS can reconcile advance payments made throughout the year to the actual cost-sharing reduction amounts. Based upon preliminary discussions with the issuer and vendor community regarding the costs associated with implementing the standard methodology, we assume that the information technology necessary to implement the standard methodology will be developed by three vendors at a cost of approximately $6 million per vendor, for total costs of approximately $18 million. We also expect that each issuer will need to spend approximately $100,000 to customize the vendor solution technology and/or modify their claims system. Therefore, we estimate total administrative costs of approximately $138 million. While these information collection requirements are subject to the Paperwork Reduction Act, the information collection process and instruments associated with this requirement are currently under development. We will seek OMB approval and solicit public comments upon their completion. We note that we have not included our initial cost estimate of this approach in Table 25 or Table 26.

As discussed in section III.E.4.e, we are issuing an interim final rule with comment elsewhere in this issue of the **Federal Register** to provide QHP issuers with the option to submit data about the actual amount of cost-sharing reductions using an alternate methodology for purposes of payment reconciliation. We address the burden associated with this alternate approach in the Collection of Information section of the interim final rule with comment.

J. ICRs Regarding Reduction of an Enrollee's Share of Premium To Account for Advance Payment of the Premium Tax Credit (§ 156.460)

Under § 156.460(a)(2), if a QHP issuer receives an advance payment of the premium tax credit on behalf of an individual, the QHP issuer must notify the Exchange of any reduction in premium through the standard enrollment acknowledgment in accordance with § 156.265(g). Because this notification will occur through the enrollment acknowledgment process that already exists under the final Exchange Establishment Rule (77 FR 18310), at § 156.265(g), we believe that this requirement will impose minimal burden on QHP issuers, and that it will take an insurance analyst five minutes (at an hourly wage of $38.49), to collect and submit this information to each Exchange. Therefore, we estimate a cost of approximately $3.21 for each QHP issuer, and an aggregate cost of approximately $3,849 for all 1,200 QHP issuers, as a result of this requirement.

K. ICRs Regarding Allocation of Rates and Claims Costs for Advance Payments of the Premium Tax Credit and Cost-Sharing Reductions (§ 156.470)

In § 156.470(a), we establish that an issuer provide to the Exchange annually for approval, for each metal level health plan offered or intended to be offered in the individual market on the Exchange, an allocation of the rate and the expected allowed claims costs for the plan, for EHB, other than services described in § 156.280(d)(1), and any

other services or benefits offered by a health plan that do not meet the definition of EHB. In § 156.470(b), we establish that an issuer of a stand-alone dental plan provide to the Exchange for approval a dollar allocation required by the expected premium for the plan to the pediatric dental essential health benefit. In § 156.470(c), we are finalizing standards for QHP issuers for calculating the allocation required by paragraph (a). As discussed above, we are modifying § 156.470(d) and finalizing one standard for issuers of stand-alone dental plans for calculating the allocation in paragraph (b). Lastly, in § 156.470(e), we are finalizing the requirement that an issuer of a metal level health plan or stand-alone dental plan offered, or intended to be offered, in the individual market on the Exchange, submit an actuarial memorandum with a detailed description of the methods and specific bases used to perform the allocations that would be required under paragraphs (a) and (b) of that section, demonstrating that the allocations meet the standards set forth in paragraphs (c) and (d).

QHP issuers will submit these allocations and justifications through the Effective Rate Review program (as finalized in the Market Reform Rule at § 154.215(d)(3)–(4), and detailed in the accompanying PRA package with OMB Control Number 0938–1141) or directly to the Exchange if the issuer is not required to submit rates to the Effective Rate Review program. The Rate Increase Disclosure and Review Rule establishes a process to ensure the public disclosure of all information and justifications relating to unreasonable rate increases. To that end, the regulation establishes various reporting requirements for health insurance issuers, including a Preliminary Justification for a proposed rate increase, a Final Justification for any rate increase determined by a State or HHS to be unreasonable, and a notification requirement for unreasonable rate increases that will not be implemented. The Preliminary Justification includes data supporting the potential rate increase as well as a written explanation of the rate increase. For those rates HHS will be reviewing, issuers' submissions also will include data and information that HHS will need to make a valid actuarial determination regarding whether a rate increase is unreasonable. Therefore, there will be no additional burden on QHP issuers that submit their rates through the Effective Rate Review program. The burden for the Effective Rate Review submission is already accounted for in OMB Control Number 0938–1141. We are also revising the supporting statement of the information collection approved under OMB Control Number 0938–1141 to clarify that we will be collecting this allocation information from metal plans to be offered on an Exchange, whether they are new or existing.

This requirement will result in additional burden for stand-alone dental plans. We estimate that it will take each stand-alone dental plan five hours to prepare and submit this information to the Exchange. We assumed that this requirement will require three hours of labor by an insurance analyst (at an hourly wage rate of $38.49) and two hours of labor by an actuary (at an hourly wage rate of $56.89). Assuming 20 stand-alone dental plans across the market, we estimate an aggregate cost of approximately $4,585 for all stand-alone dental plans to submit these allocations and justifications to the Exchange. We plan to revise the supporting statement published under HHS form number 10433, which is pending final OMB approval, to account for this additional burden.

L. ICRs Regarding QHP Participation Standards in SHOP (§ 156.200)

In § 156.200(g)(1), we establish a QHP certification standard for the FFE. If the issuer of a QHP in an FFE also participates in the State's small group market, the QHP certification standard would be met if the issuer offers at least one small group market QHP at the silver level of coverage and one QHP at the gold level of coverage in a FF–SHOP serving that State. We also propose that, if neither the issuer nor any issuer in the same issuer group has a share of the State's small group market greater than 20 percent, the standard would be met. Therefore, no issuer would be required to begin offering small group market plans to meet this requirement. The burden associated with this requirement is the time and effort for an issuer to prepare a QHP certification application for a SHOP for at least one silver level and one gold level plan design. This burden would be incurred by issuers who, absent this requirement, would otherwise not have participated in a SHOP. We describe the burden associated with this requirement in the 30-day **Federal Register** Notice for the Initial Plan Data Collection published on November 21, 2012 (77 FR 69846). The market share determination is based on earned premiums already submitted by all issuers in the State's small group market under § 158.110, and thus poses no additional reporting burden.

M. ICRs Regarding Medical Loss Ratio Reporting (§ 158.130, § 158.140, § 158.162, § 158.221, § 158.240)

This final rule directs issuers to include all payments and receipt amounts related to the reinsurance, risk corridors and risk adjustment programs in the annual MLR report.

The existing information collection requirement is approved under OMB Control Number 0938–1164. This includes the annual reporting form that is currently used by issuers to submit MLR information to HHS. Prior to the deadline for the submission of the annual MLR report for the 2014 MLR reporting year, and in accordance with the PRA, HHS plans to solicit public comment and seek OMB approval for an updated annual form that will include reporting of the premium stabilization payments and will reflect the changes in deduction for community benefit expenditures for Federal income tax exempt not-for-profit issuers.

TABLE 25—ESTIMATED FISCAL YEAR REPORTING RECORDKEEPING AND COST BURDENS

Regulation sections	OMB Control No./CMS Form No.	Respondents	Responses	Burden per response (hours)	Total annual burden (hours)	Hourly labor cost of reporting [36] ($)	Total labor cost ($)	Total capital/ maintenance costs ($)	Total cost ($)
§ 153.405	0938–1155	22,900	22,900	1.00	22,900	55.00	1,259,500	0	1,259,500
§ 153.630(b)	0938–1155	1,800	540,000	1.78	960,000	90.00	86,400,000	0	86,400,000
§ 153.720(a)	0938–1155	1,800	1,800	3.00	5,400	59.39	320,706	0	320,706
§ 155.1030(a)	0938–NEW/CMS–10433	51	51	3.50	179	51.62	9,240	0	9,240
§ 155.1030(b)(2)	0938–NEW/CMS–10433	20	20	0.50	10	38.49	385	0	385
§ 155.1030(b)(3)	0938–NEW/CMS–10433	51	51	0.08	4.25	38.49	164	0	164
§ 156.420	0938–NEW/CMS–10433	1,200	13,200	1.50	19,800	52.51	1,039,698	0	1,039,698
§ 156.430(a)(2)	0938–NEW/CMS–10433	1,200	4,800	1.00	4,800	47.69	228,912	0	228,912
§ 156.460(a)(2)	0938–NEW/CMS 10433	1,200	1,200	0.08	100	38.49	3,849	0	3,849
§ 156.470	0938–NEW/CMS–10433	20	20	5	100	45.85	4,585	0	4,585

TABLE 25—ESTIMATED FISCAL YEAR REPORTING RECORDKEEPING AND COST BURDENS—Continued

Regulation sections	OMB Control No./CMS Form No.	Respondents	Responses	Burden per response (hours)	Total annual burden (hours)	Hourly labor cost of reporting [36] ($)	Total labor cost ($)	Total capital/ mainte-nance costs ($)	Total cost ($)
Total		24,171					89,267,039	0	89,267,039

VI. Regulatory Impact Statement (or Analysis)

A. Statement of Need

This final rule implements standards related to premium stabilization programs (reinsurance, risk adjustment, and risk corridors), consistent with the Affordable Care Act. This final rule also includes provisions governing the cost-sharing reductions program, the advance payment of the premium tax credit program, the medical loss ratio program, the SHOP Exchange, and user fees for Federally-facilitated Exchanges. The purpose of the three premium stabilization programs is to prevent adverse selection and to protect consumers from increases in premiums due to issuer uncertainty. The Premium Stabilization Rule explained that further details on the implementation of these programs, including the specific parameters applicable to these programs, would be included in this rule.

B. Overall Impact

We have examined the impacts of this rule as required by Executive Order 12866 on Regulatory Planning and Review (September 30, 1993), Executive Order 13563 on Improving Regulation and Regulatory Review (January 18, 2011), the Regulatory Flexibility Act (RFA) (September 19, 1980, Pub. L. 96–354), section 202 of the Unfunded Mandates Reform Act of 1995 (March 22, 1995, Pub. L. 104–4), Executive Order 13132 on Federalism (August 4, 1999), and the Congressional Review Act (5 U.S.C. 804(2)).

Executive Orders 12866 and 13563 direct agencies to assess all costs and benefits of available regulatory alternatives and, if regulation is necessary, to select regulatory approaches that maximize net benefits (including potential economic, environmental, public health and safety effects, distributive impacts, and equity). Executive Order 13563 emphasizes the importance of quantifying both costs and benefits, of reducing costs, of harmonizing rules, and of promoting flexibility. A regulatory impact analysis (RIA) must be prepared for rules with economically significant effects ($100 million or more in any 1 year).

OMB has determined that this Payment Notice is ''economically significant'' within the meaning of section 3(f)(1) of Executive Order 12866, because it is likely to have an annual effect of $100 million in at least one year. Accordingly, we have prepared a regulatory impact analysis that presents the costs and benefits of this final rule.

The overarching goal of the premium stabilization and Exchange-related provisions and policies in the Affordable Care Act is to make affordable health insurance available to individuals who do not have access to affordable employer-sponsored coverage. The provisions within this final rule are integral to the goal of expanding coverage. For example, the premium stabilization programs (risk adjustment, reinsurance, and risk corridors) decrease the risk of financial loss that health insurance issuers might otherwise expect in 2014. The cost-sharing reductions program and advance payments of the premium tax credit assist low- and moderate-income consumers in purchasing health insurance. The combined impacts of these provisions affect the private sector, issuers, and consumers, through increased access to health care services including preventive services, decreased uncompensated care, lower premiums, and increased plan (and thereby cost) transparency. Through the reduction of financial uncertainty for issuers and increased affordability for consumers, the provisions are expected to increase access to health coverage.

Recent research [37] analyzed the effects of increased insurance coverage. The analysis studied the health effects of expanded Medicaid eligibility in three States (New York, Maine, and Arizona) with comparable States that did not expand Medicaid over a multiyear time period. The study found that increased coverage resulted in:

- Significant reduction in mortality (19.6 deaths per 100,000) during the period of study;
- Increased rate of self-reported health status (by three percent); and
- Reduction in cost-related delays in care (by 21 percent).

While these results may not be entirely generalizable given the population and coverage type, they do replicate other research findings [38] of the importance of health coverage in improving health and delaying mortality.

There are administrative costs to States to administer these programs, although Federal grants are available through 2014 for States seeking to establish State-based Exchanges, and to support certain State activities related to the establishment of FFEs or State Partnership Exchanges.

Issuers making reinsurance contributions but not receiving reinsurance payments may receive indirect benefits in the form of lower uncompensated care costs. There are also reporting costs for issuers to submit data and financial information. This regulatory impact analysis discusses the benefits and costs of the provisions in this final rule.

In this analysis, we discuss programs and standards newly implemented by the final rule, such as certain provisions related to the cost-sharing reductions program, the advance payment of the premium tax credit program, the medical loss ratio program, the SHOP Exchange, and user fees for a Federally-facilitated Exchange, as well as new regulatory provisions for the three premium stabilization programs (reinsurance, risk adjustment, and risk corridors) which were introduced in the Premium Stabilization Rule (77 FR 17220). In addition to building on the regulatory impact analysis for that earlier rule, we are able, for the analysis of much of the final rule, to use the Congressional Budget Office's estimates of the Affordable Care Act's impact on Federal spending, revenue collection, and insurance enrollment.

[36] Bureau of Labor Statistics, U.S. Department of Labor, *National Compensation Survey: Occupational Earnings in the United States, 2011.* United States Government Printing Office. May 2011. Retrieved from *http://www.bls.gov/ncs/ncswage2010.htm.*

[37] Sommers, Ben et al ''Mortality and Access to Care among Adults after State Medicaid Expansions'' New England Journal of Medicine No: 367 20121025–1034.

[38] Finkelstein, A et al. ''The Oregon Health Insurance Experiment: Evidence from the First Year.'' NBER Working Paper No. 17190, July 2011.

Comment: Two commenters urged further analysis of the costs and benefits of the rule. Specifically, one commenter asked HHS to provide analysis showing how this rule would affect consumer premiums, employer costs, and taxpayer subsidies. The commenter asked HHS to project how increased use of health care would impact employers and wages for lower-income workers.

Response: While we cannot precisely predict the price of insurance, the premium stabilization programs are designed to mitigate premium increases for all consumers. In the individual and small group markets, the advance payment of the premium tax credit and cost-sharing reduction programs are intended to make health insurance affordable for low-income individuals. CBO's estimates remain the most comprehensive accounting of all the interacting provisions pertaining to the Affordable Care Act, and contain Federal budget impact estimates of some provisions that have not been independently estimated by CMS. Table 26 shows accounting projections on the costs and transfers of this rule. We are unable to project either the potential economic and social benefit from a more productive workforce that could result from access to health care or the potential economic and social cost when more people use health care. HHS relied on the Bureau of Labor Statistics, U.S. Department of Labor, *National Compensation Survey Occupational Earnings in the United States, 2011,* for estimates of most job descriptions and wages. We believe that our analysis reflects our best estimate of the costs associated with the proposed rule. Therefore, we are not modifying the proposed estimates of regulatory impact in this final rule.

C. Impact Estimates of the Payment Notice Provisions and Accounting Table

In accordance with OMB Circular A–4, Table 26 below depicts an accounting statement summarizing HHS's assessment of the benefits, costs, and transfers associated with this rule.

This final rule implements standards for programs that will have numerous effects, including providing consumers with affordable health insurance coverage, reducing the impact of adverse selection, and stabilizing premiums in the individual and small group health insurance markets and in an Exchange. We are unable to quantify the benefits of the final rule, such as improved health, longevity, and national productivity due to increased insurance enrollment, and some of its costs, such as the cost of providing additional medical services to newly-enrolled individuals. Direct costs in the Table 26 below reflect administrative costs to States (including those costs associated with operating risk adjustment and reinsurance), health insurance issuers, and Exchanges, but do not include administrative costs incurred by the Federal government. As discussed earlier, we estimate costs associated with establishing a dedicated data environment in the Premium Stabilization Rule Supporting Statement, and do not include those costs in Table 26. The effects in Table 26 reflect estimated cost-sharing reduction payments, which are transfers from the General Fund of the U.S. Treasury to consumers who qualify for cost-sharing reductions. These transfer estimates are based on the Congressional Budget Office's March 2012 baseline estimates, and have been annualized over the five-year period from fiscal years (FYs) 2013 through 2017. Estimated transfers do not reflect any user fees paid by insurance issuers for the Federally-facilitated Exchange. Estimated transfers from health insurance issuers resulting from risk adjustment user fees are included in the table below.

TABLE 26—ACCOUNTING TABLE

Category	Estimates	Units		
		Year dollar	Discount rate (percent)	Period covered
Benefits				
Annualized Monetized ($millions/year)	Not Estimated Not Estimated			
Costs				
Annualized Monetized ($millions/year)	$68.95 $70.37	2013 2013	7 3	2013–2017 2013–2017
Transfers				
Federal Annualized Monetized ($millions/year)	$6,529.29 $6,803.02	2013 2013	7 3	2013–2017 2013–2017

This impact analysis for the premium stabilization programs references estimates from CBO and CMS. CBO's estimates remain the most comprehensive accounting of all the interacting provisions pertaining to the Affordable Care Act, and contain Federal budget impact estimates of some provisions that have not been independently estimated by CMS. Based on our review, we expect that the provisions of this final rule will not significantly alter CBO's estimates of the budget impact of the reinsurance, risk corridors, and risk adjustment programs. The requirements of these programs are well within the parameters used by CBO in the modeling of the Affordable Care Act. Our review and analysis of the requirements indicate that the impacts are likely within the model's margin of error.

For this regulatory impact analysis, we are shifting the estimates for the reinsurance and risk adjustment programs to reflect the four-year period from FYs 2014 through 2017. Table 27 includes the CBO estimates for outlays and receipts for the reinsurance and risk adjustment programs from FYs 2014 through 2017. These estimates for reinsurance and risk adjustment reflect CBO's scoring of these provisions. CBO assumed risk adjustment payments and charges would begin to be made in 2014, when in fact these payments and

charges will begin in 2015, as discussed in section III.B. of this final rule; therefore, the estimates are assigned one year later in Table 27 than they were in the original CBO report.

CBO did not separately estimate the program costs of risk corridors, but assumed aggregate collections from some issuers would offset payments made to other issuers. Table 27 summarizes the effects of the risk adjustment and reinsurance programs on the Federal budget, with the additional, societal effects of this rule discussed in this regulatory impact analysis. We note that transfers associated with risk adjustment and reinsurance were previously estimated in the Premium Stabilization Rule; therefore, to avoid double-counting, we do not include them in the accounting statement for this rule (Table 26).

TABLE 27—ESTIMATED FEDERAL GOVERNMENT OUTLAYS AND RECEIPTS FOR THE REINSURANCE AND RISK ADJUSTMENT PROGRAMS FROM FYS 2014–2017

[In billions of dollars]

Year	2014	2015	2016	2017	2014–2017
Reinsurance and Risk Adjustment Program Payments*	.....	11	18	18	47
Reinsurance and Risk Adjustment Program Receipts*	.....	12	16	18	46

* Risk adjustment program payments and receipts lag by one quarter. Receipt will fully offset payments over time. The CBO estimates do not reflect the $5 billion in reinsurance contributions that are submitted to the U.S. Treasury.

Source: Congressional Budget Office. 2011. *Letter to Hon. Nancy Pelosi.* March 20, 2010.

Risk Adjustment

Risk adjustment is a permanent program that may be administrated by States that operate an HHS-approved Exchange. States have the option of proposing alternative methodologies. Risk adjustment is generally applied to non-grandfathered health plans offered in the individual and small group markets, both inside and outside of the Exchange. The Exchange may operate risk adjustment, although a State may also elect to have an entity other than the Exchange perform the risk adjustment functions, provided that the State is approved by HHS to operate risk adjustment. Similar to the approach for reinsurance, multiple States may contract with a single entity to administer risk adjustment, provided that transfers do not occur between States and that each State is approved to operate their risk adjustment program. Having a single entity administer risk adjustment in multiple States may provide administrative efficiencies. In this final rule, we establish a risk adjustment State approval process. We estimate it will take each State approximately 180 hours to complete the initial risk adjustment entity approval process. We estimate it will take an operations analyst 72 hours (at $55 an hour), a contract administrator 72 hours (at $40 per hour), a senior manager 24 hours (at $77 an hour), and an attorney 12 hours (at $77 an hour) to meet the initial approval requirements. Therefore, we estimate administrative costs of approximately $9,612 for each entity, as a result of these approval requirements.[39]

The details of the HHS-developed risk adjustment methodology are specified in this final rule. The HHS-developed risk adjustment methodology is based on a model that is concurrent and uses demographic and diagnosis information in a benefit year to predict total plan liability in the benefit year. The national payment transfer methodology is based on the State average premium to ensure that payments and charges net to zero.

States may use this methodology or develop and propose alternate risk adjustment methodologies that meet Federal standards. Once HHS approves an alternate risk adjustment methodology, it will be considered a Federally certified risk adjustment methodology that any State may elect to use. In this final rule, we lay out the criteria that HHS will use to evaluate alternate risk adjustment methodologies. Approved Federally certified risk adjustment methodologies will be published annually in the HHS notice of benefit and payment parameters.

States that elect to develop their own risk adjustment methodologies are likely to have increased administrative costs. Developing a risk adjustment methodology requires complex data analysis, including population simulation, predictive modeling, and model calibration. States that elect to use the HHS-developed methodology would likely reduce administrative costs. We describe these administrative costs in the Collection of Information Requirements section of this final rule.

In the Premium Stabilization Rule, we defined a risk adjustment covered plan as any health insurance coverage offered in the individual or small group market with the exception of grandfathered health plans, group health insurance coverage described in § 146.145(c) of this subchapter, individual health insurance coverage described in § 148.220 of this subchapter, and any other plan determined not to be a risk adjustment covered plan in the annual HHS notice of benefit and payment parameters. In this final rule, we clarify that plans not subject to certain market reforms and student health plans will not be subject to the issuer requirements in subparts G and H of 45 CFR part 153. Under Section 1312(c)(3) of the Affordable Care Act, States have the flexibility to merge the individual and small group markets into a single risk pool, or keep them separate. In this final rule, we clarify that HHS will merge markets when operating risk adjustment on behalf of a State if the State elects to do the same for single risk pool purposes.

Developing the technology infrastructure required for data submission will likely require an administrative investment. The risk adjustment process will require significant amounts of demographic and diagnostic data to run through a risk assessment model to determine individual risk scores that form the basis for plan and State averages. The Premium Stabilization Rule requires States to collect or calculate individual risk scores at a minimum. States may vary the amount and type of data collected, provided that States meet specified data collection standards.

Administrative costs will vary across States and health insurance issuers depending on the type of data collection approach used in the State. In States opting to operate risk adjustment using a distributed model of data collection, the costs associated with mapping and storing the required data and, in some cases, the costs associated with running

[39] For purposes of Table 26, we assume that one State will operate risk adjustment.

the risk adjustment software will likely be borne by the issuer.

States and issuers that already have systems in place for data collection and reporting will have reduced administrative costs. For example, issuers that already report data for Medicare Advantage (MA) or Medicaid Managed Care may see minimal additional administrative cost for risk adjustment. Additionally, some States risk-adjust their Medicaid Managed Care programs. States with all-payer or multi-payer claims databases may need to modify their systems to meet the requirements of risk adjustment. However, these costs of modification will be less than the costs of establishing these systems. States and issuers that do not have existing technical capabilities will have larger administrative costs related to developing necessary infrastructure.

Issuer characteristics, such as size and payment methodology, will also affect administrative costs. In general, national issuers will likely be better prepared for the requirements of risk adjustment than small issuers.

In this final rule, we provide more details on the data collection approach when we operate risk adjustment on behalf of a State. The Premium Stabilization Rule established that when HHS operates risk adjustment on behalf of a State, it will use a distributed approach. We believe that this approach minimizes issuer burden while protecting enrollee privacy. Under a distributed approach, issuers will need to format risk adjustment data, and maintain that data in compliance with HHS-established guidelines and applicable standards. We describe these administrative costs in the Collection of Information Requirements section of this final rule.

The Premium Stabilization Rule directs States to audit a sample of data from each issuer and to ensure proper implementation of risk adjustment software by all issuers that participate in risk adjustment. States may extrapolate results from the sample to adjust the average actuarial risk for the plan. This approach is consistent with the approach now used in Medicare Advantage, where audit sample error rates will be extrapolated to contract-level payments to recoup overpayment amounts.

In this final rule, we establish data validation standards for when HHS operates risk adjustment on behalf of a State. HHS will conduct a data validation program consisting of six stages: (1) Sample selection; (2) initial validation audit; (3) second validation audit; (4) error estimation; (5) appeals; and (6) payment adjustments. Issuers will engage independent initial auditors to conduct an initial audit of an HHS-selected sample of risk adjustment data. HHS will retain a second validation auditor to verify the findings of the initial validation audit and provide error estimates. However, in this final rule we note that there will be no adjustments to payments and charges based on the error estimates for benefit years 2014 and 2015. We describe these administrative costs in the Collection of Information Requirements section of this final rule. We also describe a process to appeal data validation findings. Issuers will have an opportunity to appeal findings from both the initial validation audit and second validation audit. In addition, HHS will collect approximately $20 million in user fees to support the Federally operated risk adjustment program.

Risk adjustment transfers dollars from health plans with lower-risk enrollees to health plans with higher-risk enrollees. We are updating the cost estimates for this RIA to include 2017, using CBO estimates.[40] From 2014 through 2017, we estimated that there will be $45 billion transferred among issuers.

Risk adjustment protects against adverse selection by allowing insurers to set premiums according to the average actuarial risk in the individual and small group market without respect to the type of risk selection the insurer would otherwise expect to experience with a specific product offering in the market. This should lower the risk premium and allow issuers to price their products closer to the average actuarial risk in the market. In addition, it mitigates the incentive for health plans to avoid unhealthy members.

The risk adjustment program also serves to level the playing field inside and outside of the Exchange, as payments and charges are applied to non-grandfathered individual and small group plans inside and outside of the Exchange. This mitigates the potential for excessive premium growth within the Exchange due to anticipated adverse selection.

Comment: One commenter disagreed with the $600 million in aggregate administrative costs estimated in the Collection of Information section of the proposed rule, and reflected in this regulatory impact analysis. The commenter stated that the cost associated with this rule would be much higher than the $600 million estimated in the proposed rule.

Response: The cost to States of developing their own risk adjustment and reinsurance programs was addressed in the Premium Stabilization Rule, Standards Related to Reinsurance, Risk Corridors, and Risk Adjustment, published March 23, 2012. We recognize States may require significant analysis to assess whether to operate risk adjustment or reinsurance programs. Many states received grants available under the Affordable Care Act to underwrite such analyses (although we note that these grants would affect who bears the cost of the rule, not the amount incurred by society as a whole). States choosing in the future to operate risk adjustment may benefit from methodologies developed by other States and approved by HHS. The cost of reporting data to HHS should decline once systems are in place.

We have limited our estimate to the incremental information collection associated with the requirements of the proposed rule. HHS relied on the Bureau of Labor Statistics, U.S. Department of Labor, *National Compensation Survey Occupational Earnings in the United States, 2011,* for estimates of most job descriptions and wages. We believe that our analysis reflects our best estimate of the costs associated with the proposed rule. We also note we have modified some estimates from our proposed rule to better reflect the most current agency estimates.

Reinsurance

The Affordable Care Act creates a transitional reinsurance program for benefit years 2014, 2015, and 2016. Each State is eligible to operate reinsurance. If a State operates reinsurance, the State must enter into a contract with an applicable reinsurance entity to carry out the program. If a State does not elect to operate reinsurance, HHS will carry out reinsurance for that State.

The Affordable Care Act requires a reinsurance pool of $10 billion in 2014, $6 billion in 2015, and $4 billion in 2016. It also requires annual contributions payable to the U.S. Treasury of $2 billion, $2 billion, and $1 billion for those years, respectively. These contributions are funded by health insurance issuers and self-insured group health plans. Section 1341(b)(3) of the Affordable Care Act directs the Secretary of HHS to establish the method for determining contribution levels for the program. In this final rule, HHS establishes a national per capita contribution rate designed to collect the $12.02 billion in 2014 to cover the

[40] Congressional Budget Office. 2011. *Letter to Hon. Nancy Pelosi.* March 20, 2010. We note that these estimates include only risk adjustment transfers whereas Table 27 shows transfer estimates for risk adjustment and reinsurance.

required $10 billion in reinsurance payments, the $2 billion contribution to the U.S. Treasury, and the additional $20.3 million to cover the Federal administrative expenses of operating reinsurance in 2014. We estimate that we will collect these authorized amounts from 2014 through 2016.

HHS will collect the required contributions under the national contribution rate from health insurance issuers and self-insured group health plans.[41] States operating reinsurance may collect additional contributions for administrative costs, reinsurance payments, or both. Section 1341(a)(3)(B) of the Affordable Care Act requires that the reinsurance contribution amount for each issuer reflect each issuer's fully insured commercial book of business for all major medical products. In this final rule, we clarify which types of health insurance coverage and self-insured group health plans are to make reinsurance contributions, and which are not. This clarification does not affect the amounts authorized to be collected for reinsurance.

A State that establishes the reinsurance program may elect to collect additional contributions to provide funding for administrative expenses or supplemental reinsurance payments. Additional contributions for administrative expenses may be collected by the State's applicable reinsurance entity, at the State's election. Any additional contributions for reinsurance payments must be collected by the State's applicable reinsurance entity. In this final rule, we establish that HHS will collect administrative expenses for HHS-operated reinsurance programs. A State that operates the reinsurance program bears the administrative costs of the applicable reinsurance entity, and must ensure that the applicable reinsurance entity complies with program requirements. HHS will share some of its collections for administrative costs with States that run the program. If a State operates reinsurance, HHS would retain $0.055 per capita per year to offset the costs of contributions collection, and would allocate $0.055 per capita per year towards administrative expenses for reinsurance payments. The total amounts allocated towards administrative expenses for reinsurance payments would be distributed to States operating reinsurance (or retained by HHS where HHS is operating the reinsurance program) in proportion to the State-by-State total requests for reinsurance payments made under the uniform payment parameters. A State may have more than one applicable reinsurance entity, and two or more States may jointly enter into an agreement with the same applicable reinsurance entity to carry out reinsurance functions in their State. Administrative costs will likely increase if multiple applicable reinsurance entities are established within a State, whereas administrative efficiencies may be found if multiple States contract with one applicable reinsurance entity.

We also finalize an annual collections and payment cycle in this final rule. We considered a quarterly collections and payment cycle, as envisioned by the Premium Stabilization Rule. However, a quarterly cycle would impose significant costs on contributing entities. Additionally, because HHS and States operating reinsurance would likely need to hold back a significant portion of reinsurance funds until the end of the year to ensure equitable payment of requests for reinsurance payments, issuers would receive only limited benefits from a quarterly payment cycle.

Under § 153.100(a), a State operating reinsurance must issue an annual notice of benefit and payment parameters specific to that State if it elects to: (i) Modify the data requirements from the HHS-operated reinsurance program; (ii) collect additional reinsurance contributions, under § 153.220(d); or (iii) use more than one applicable reinsurance entity.

States that establish the reinsurance program will also maintain any records associated with the reinsurance program, as set forth in § 153.240(c) of the Premium Stabilization Rule. The Premium Stabilization Rule established that reinsurance contributions will be based on a per capita amount. The per capita approach will be less complex to administer in comparison to the percent of premium approach that HHS considered but ultimately decided not to pursue. Further, the per capita approach will better enable HHS to maintain the goals of the reinsurance program by providing issuers with a more straightforward approach to reinsurance contributions. States will be permitted to collect additional contributions towards supplemental reinsurance payments. We estimate that it will take an operations analyst 8 hours (at $55 an hour) and a senior manager 2 hours (at $77 an hour) to ensure that reinsurance contributions collected and funds used are reasonably calculated to cover additional reinsurance payments that are projected to be made only under the supplemental reinsurance payment parameters. We believe that it will cost each State choosing to collect additional contributions approximately $594 to comply with this requirement. Additionally, under § 153.232(e), if all requested reinsurance payments under the State supplemental reinsurance parameters exceed all reinsurance contributions collected under the additional State contribution rate for the benefit year, the State must determine a uniform pro rata adjustment to be applied to all requests for supplemental reinsurance payments. The State or the applicable reinsurance entity must reduce all such requests for supplemental reinsurance payments for the applicable benefit year by that adjustment. We estimate it will take an operations analyst 40 hours (at $55 an hour) and a senior manager 12 hours (at $77 an hour) to determine appropriate payment calculations and, if necessary, a pro rata adjustment. Therefore, we estimate that it will cost each State choosing to collect additional contributions approximately $3,124 to comply with this requirement.[42]

In this final rule, we establish the methodology to be used for counting covered lives for purposes of calculating reinsurance contributions. This methodology offers contributing entities a choice similar to counting methods permitted under the PCORTF Rule. We believe that relying on a previously established process set forth in the PCORTF Rule for counting enrollees will minimize issuer burden for conducting these counts. In the Collection of Information Requirements section of this final rule, we describe the administrative costs for issuers associated with the data requirements in § 153.400(b) for all contributing entities both inside and outside the Exchange. The contributing entities will provide enrollment data to HHS to substantiate contribution amounts.

Reinsurance payments will be made to issuers of individual market insurance coverage for high claims costs for enrollees. In this final rule, we establish a national attachment point, national reinsurance cap, and national coinsurance rate. In the Premium Stabilization Rule, we established that payments will be made on a portion of claims costs for enrollees in reinsurance

[41] The Department of Labor has reviewed this rule and advised that paying required reinsurance contributions would constitute a permissible expense of the plan for purposes of Title I of the Employee Retirement Income Security Act (ERISA) because the payment is required by the plan under the Affordable Care Act as interpreted in this rule. (See generally, Advisory Opinion 2001–01A to Mr. Carl Stoney, Jr., available at *www.dol.gov/ebsa* discussing settlor versus plan expenses.)

[42] For purposes of Table 26, we assume that two States will operate reinsurance.

eligible plans incurred above an attachment point, subject to a reinsurance cap.

Use of a reinsurance cap, as well as the requirement for health insurance issuer cost sharing above the attachment point and below the cap, is designed to incentivize health insurance issuers to control costs. This approach based on claims costs is simpler to implement and more familiar to health insurance issuers, and therefore will likely result in savings in administrative costs as compared to a condition-based reinsurance approach.

A State operating reinsurance may supplement the reinsurance payment parameters proposed by HHS only if the State elects to collect additional contributions for supplemental reinsurance payments or use additional State funds for supplemental reinsurance payments, and must specify these supplemental payment parameters in its State notice of benefit and payment parameters. We estimate that it will take an operations analyst 2 hours (at $55 an hour) to gather the relevant information, for a total burden of $110 per State electing to run reinsurance. Note that a State may develop a separate reinsurance program using entirely its own design.

In this final rule, we require States to provide a process through which a reinsurance-eligible plan that does not generate individual enrollee claims in its normal course of business may derive costs to request reinsurance payments. In addition, we clarify that when HHS operates the reinsurance program on behalf of a State that these plans may price encounters in accordance with their existing principal, internal encounter pricing methodology. Additionally, in § 153.240(b) of this final rule, States operating the reinsurance program must notify issuers annually of reinsurance payments to be made, as well as provide reinsurance-eligible plans quarterly estimates of requests for reinsurance payments. Moreover, we establish that for both State- and HHS-operated reinsurance programs, only plans subject to the 2014 market reform rules are eligible for reinsurance payment.

We estimate it will take an operations analyst 40 hours (at $55 an hour), 10 hours per quarter, and a senior manager 12 hours (at $77 an hour), 3 hours per quarter, to determine appropriate quarterly estimates of expected reinsurance payments and to notify plans. Additionally, we expect it will take an operations analyst 40 hours (at $55 an hour) and a senior manager 12 hours (at $77 an hour) to determine the total amount of reinsurance payments for each reinsurance-eligible plan. Therefore, we estimate that it will cost each State choosing to run reinsurance approximately $6,248 to comply with this requirement.

We also believe that these provisions will result in a small administrative cost to States associated with determining a format for submission of reinsurance payment data and notifying capitated plans of the acceptable method and format of data collection. We anticipate that a State will only need to establish this process once. On average, we estimate that it will take each State approximately 50 hours to comply with this requirement. We estimate it will take an operations analyst 40 hours (at $55 an hour) and a senior manager 10 hours (at $77 an hour) to determine an appropriate format for submission of reinsurance payment data for capitated plans and to notify plans of the acceptable method and format for data collection. Therefore, we estimate that it will cost each State choosing to run reinsurance approximately $2,970 to comply with these requirements.

In this final rule, we also provide more details on the data collection approach for HHS-operated reinsurance programs. HHS plans to use the same distributed data collection approach used for risk adjustment; however, only data elements necessary for reinsurance claim selection will be considered for the purpose of determining reinsurance payments. In the Collection of Information Requirements section, we describe the administrative costs required in § 153.410 for issuers of reinsurance-eligible plans in States where HHS is operating reinsurance to receive reinsurance payments. We believe details on the reinsurance data collection approach finalized in this rule are reflected in these cost estimates.

A wide range of health insurance issuers and self-insured group health plans contribute to the reinsurance pool because successful implementation of this rule, in combination with the range of Affordable Care Act reforms starting in 2014, benefit all of their enrollees; for example, those reforms should lead to fewer unreimbursed health costs, lowering the costs for issuers and group health plans. Providing reinsurance payments to health insurance issuers with plans in the individual market serves to stabilize premiums in the individual market. Reinsurance will put downward pressure on individual market rates as new enrollees with unknown risk join the market. It will also help prevent insurers from building in risk premiums to their rates given the unknown health of their new enrollees. It is expected that the cost of reinsurance contributions will be roughly equal to 1 percent of premiums in the total market in 2014, less in 2015 and 2016, and will end in 2017. In contrast, it is anticipated that reinsurance payments will result in premium decreases in the individual market of between 10 and 15 percent.

Evidence from the Healthy New York (Healthy NY) program [43] supports the magnitude of these estimates. In 2001, the State of New York began operating Healthy NY and required all HMOs in the State to offer policies for which small businesses and low-income individuals would be eligible. The program contained a ''stop-loss'' reinsurance provision designed to lower premiums for enrollees. Under the program, if any enrollee incurred $30,000 in annual claims, his or her insurer was reimbursed for 90 percent of the next $70,000 in claims. Premiums for Healthy NY policies were about 15 percent to 30 percent less than those for comparable HMO policies in the small group market.

Comment: One commenter asked how HHS derived the estimate that reinsurance contributions would increase total market premiums paid by 1 percent, and that reinsurance payments to issuers would reduce premiums in the individual market by between 10 percent and 15 percent.

Response: This is an HHS estimate for the effects of reinsurance in 2014 that relied in part on a 2009 analysis of health insurance premiums by the Congressional Budget Office.

Risk Corridors

The Affordable Care Act creates a temporary risk corridors program for the years 2014, 2015, and 2016 that applies to QHPs. The risk corridors program creates a mechanism for sharing risk for allowable costs between the Federal government and QHP issuers. The Affordable Care Act establishes the risk corridors program as a Federal program; consequently, HHS will operate the risk corridors program under Federal rules with no State variation. The risk corridors program will help protect against inaccurate rate setting in the early years of the Exchanges by limiting the extent of issuer losses and gains.

QHP issuers must submit to HHS data on premiums earned, allowable claims and quality costs, and allowable administrative costs, reflecting data categories required under the Medical Loss Ratio Interim Final Rule (75 FR

[43] Swartz, K. ''Health New York: Making Insurance More Affordable for Low-Income Workers.'' *The Commonwealth Fund.* November 2001.

74918). In designing the program, HHS has sought to leverage existing data reporting for Medical Loss Ratio purposes as much as possible.

As noted above, the risk corridors program is intended to protect QHP issuers in the individual and small group markets against inaccurate rate setting. Due to uncertainty about the population during the first years of Exchange operation, issuers may not be able to predict their risk accurately, and their premiums may reflect costs that are ultimately lower or higher than predicted. To determine whether an issuer pays into, or receives payments from, the risk corridors program, HHS will compare allowable costs (essentially, claims costs subject to adjustments for health care quality, health IT, risk adjustment payments and charges and reinsurance payments) and the target amount—the difference between a plan's earned premiums and allowable administrative costs. In this final rule, we have provided for adjustments to the risk corridors calculation to account for taxes and profits within its allowable administrative costs. The threshold for risk corridor payments and charges is reached when a QHP issuer's allowable costs exceed, or fall short of, the target amount by at least three percent. A QHP with allowable costs that are at least three percent less than its target amount will pay into the risk corridors program. Conversely, a QHP with allowable costs that exceed its target amount by at least 3 percent will receive payments. Risk corridor payments and charges are a percentage of the difference between allowable costs and target amount and therefore are not on a ''first dollar'' basis.

In this final rule, HHS also specifies the annual schedule for the risk corridors program, including dates for claims run-out, data submission, and notification of risk corridors payments and charges.

We believe the proposals on the risk corridors program in this final rule have a negligible effect on the impact of the program established by and described in the Premium Stabilization Rule.

Advance Payments of the Premium Tax Credit and Cost-Sharing Reductions

The impact analysis for Payment Notice provisions relating to advance payments of the premium tax credit and cost-sharing reductions references estimates from the CBO's March 2012 baseline projections. Based on our review, we expect that those provisions will not alter CBO's March 2012 baseline estimates of the budget impact of those two programs. The requirements are well within the parameters used in the modeling of the Affordable Care Act. Our review and analysis of the requirements indicate that the impacts are likely within the model's margin of error. The Affordable Care Act provides for premium tax credits and the reduction or elimination of cost sharing for certain individuals enrolled in QHPs offered through the Exchanges. This assistance will help many low- and moderate-income individuals and families obtain health insurance—for many people, cost sharing is a barrier to obtaining needed health care.[44]

Section 1402(a)–(c) of the Affordable Care Act directs issuers to reduce cost sharing for essential health benefits for individuals with household incomes between 100 and 400 percent of the FPL who are enrolled in a QHP offered at the silver level of coverage in the individual market on the Exchange and are eligible for a premium tax credit or advance payment of premium tax credits. The Affordable Care Act, at section 1402(d), also directs issuers to eliminate cost sharing for Indians (as defined in § 155.300) with a household income at or below 300 percent of the FPL who are enrolled in a QHP of any metal level in the individual market on the Exchange, and prohibits issuers from requiring cost sharing for Indians, regardless of household income, for items or services furnished directly by the IHS, an Indian Tribe, a Tribal Organization, or an Urban Indian Organization or through referral under contracted health services. Finally, the Affordable Care Act, at section 1412, provides for the advance payments of the premium tax credit and cost-sharing reductions.

A subset of the persons who enroll in QHPs in the individual market through the Exchanges beginning in 2014 will be affected by the provisions relating to advance payments of premium tax credit and cost-sharing reductions (those with household incomes below 400 percent of the FPL and Indians enrolled in QHPs). In March 2012, CBO estimated that there will be approximately 20 million enrollees in Exchange coverage by 2016, including approximately 16 million Exchange enrollees who will be receiving subsidies.[45] Participation rates are expected to be lower in the first few years of Exchange availability as employers and individuals adjust to the features of the Exchanges.[46]

In this final rule, we provide additional details for Exchanges and QHP issuers on the administration of advance payments of premium tax credit and cost-sharing reductions for individuals and families. We clarify the approach to providing for cost-sharing reductions to eligible individuals who purchase a family policy. We also establish standards applicable to Exchanges when collecting premiums from enrollees and administering advance payments of cost-sharing reductions and the premium tax credit. We describe these administrative costs in the Collection of Information Requirements section of this final rule.

Finally, we direct QHP issuers to enroll individuals in the plan variation with the correct cost-sharing structure, and to provide those individuals with the cost-sharing reductions for which they are eligible. QHP issuers are responsible for submitting plan variations containing the cost-sharing structures proposed by HHS as required by the Affordable Care Act. We also clarify which plans are eligible for cost-sharing reductions, and we set forth standards relating to advance payments of cost-sharing reductions and reconciliation of those advance payments against actual cost-sharing reduction provided. In addition, we establish standards for QHP issuers to reduce an enrollee's share of premium to account for advance payments of the premium tax credit, and submit allocations of rates and claims costs to allow for the calculation of advance payments of cost-sharing reductions and the premium tax credit. We describe these administrative costs in the Collection of Information Requirements section of this final rule.

The cost-sharing reductions and advance payments of the premium tax credit policies will apply to all issuers that choose to seek certification to offer QHPs through the Exchanges for the individual market. QHP issuers will experience costs related to preparing and submitting to HHS data to support the administration of cost-sharing reductions and advance payments of the premium tax credit. We anticipate that the provisions for advance payments of the premium tax credit and cost-sharing reductions will result in transfers from the General Fund of the Treasury to those individuals who qualify for those programs.

User Fees

To support certain Federal operations of Federally-facilitated Exchanges, we

[44] Brook, *et al.*

[45] ''Updated Estimates for the Insurance Coverage Provisions of the Affordable Care Act,'' Congressional Budget Office, March 2012.

[46] Congressional Budget Office, ''Letter to the Honorable Evan Bayh: An Analysis of Health Insurance Premiums under the Patient Protection and Affordable Care Act,'' Washington, DC, 2009.

establish in this final rule, under section 1311(d)(5)(A) of the Affordable Care and 31 U.S.C. 9701, that a participating issuer offering a plan through a Federally-facilitated Exchange must remit a user fee to HHS each month equal to the product of the monthly user fee rate specified in the annual HHS notice of benefit and payment parameters for the applicable benefit year and the monthly premium charged by the issuer for each policy under the plan offered through a Federally-facilitated Exchange. For the 2014 benefit year, we establish a monthly user fee rate equal to 3.5 percent.

SHOP

The SHOP facilitates the enrollment of small businesses into small group health insurance plans. A qualitative analysis of the costs and benefits of establishing a SHOP was included in the regulatory impact analysis published in conjunction with the Exchange Establishment Rule.[47] This impact analysis addresses the additional costs and benefits of the proposed modifications in this rule to the SHOP sections of the Exchange Establishment Rule.

In this final rule, we implement policies for FF–SHOPs designed to prevent significant adverse selection while promoting QHP choice for employees. These policies include methods a qualified employer may use to make QHPs available to its employees, rules to ensure parity with a market's group participation requirements, rules to permit the display of agent and broker information on FF–SHOP Web sites, alignment of market definitions with other applicable rules, and incentives for issuers to participate in FF–SHOPs. Many of these proposed policies are expected to create no significant new costs.

Section 1312 of the Affordable Care Act permits a qualified employer participating in a SHOP to select a metal level of coverage and make all plans in that level of coverage available to its employees. Permitting employers to choose a single level of coverage reduces potential adverse selection within the group and therefore any additional cost due to expanded choice. In the Exchanges Establishment final rule, we provided each SHOP the flexibility to choose additional means by which a qualified employer could make QHPs available to qualified employees. In this final rule, we add an FF–SHOP option to allow qualified employers to offer qualified employees only a single QHP. This employer option is designed to further reduce adverse selection, although it may reduce the benefit to the employee resulting from broader choice. In the Exchange Establishment Rule, we did not quantify either the small risk premium or the modest additional consumer benefit resulting from employee choice at a single level of coverage, and we do not quantify the reduction in risk premium or consumer benefit resulting from this change.

The Exchange Final Rule permits a SHOP to set a minimum participation rate; such authority is limited to the extent a minimum participation rate is permissible under the PHS Act and applicable State law. Minimum participation rates require participation in the health plan by a substantial portion of the employer's group, thereby assuring a more representative risk pool and reducing adverse selection. Setting a minimum participation rate that is too low would make it ineffective, while setting it too high would reduce the number of employers offering coverage. This final rule establishes, subject to permissibility under the PHS Act, that FF–SHOPs use a default participation rate of 70 percent that may be modified if there is evidence that a higher or lower rate is either customary in the State or required by State statute. Because this policy results in no change in market dynamics, it places no additional costs on employers or issuers.

This final rule establishes that health insurance issuers with shares of a State's small group market greater than 20 percent will participate in the FF–SHOP if they also seek to participate in the FFE in the State. This policy promotes robust issuer participation in the FF–SHOP which will help qualified employers offer their employees a broad choice of health plan. The benefits of broad plan choice are quite significant. One study suggests expanding plan choice while holding premiums constant for employees results in a median increase in value to consumers (''consumer surplus'') of 20 percent of the premium cost of coverage.[48] Some of this benefit is due to expanded choice in plan type and health insurance issuer. There are two additional impacts associated with this policy. The first is the cost for the QHP issuer of submitting plans for certification in the FF–SHOP, which is described in the 30-day **Federal Register** Notice for the Initial Plan Data Collection published on November 21, 2012 (77 FR 69846). The second is the transfer associated with user fees for additional enrollees in QHPs in the FF–SHOP.

Medical Loss Ratio

This final rule amends the MLR and rebate calculation methodologies to include payments and receipts related to the premium stabilization programs. The definition of premium revenue is modified to account for these payments and receipts. When the MLR annual reporting form is updated for the reporting year 2014 and later, premium stabilization payment and receipt amounts will be considered a part of gross earned premium reported to the Secretary, similar to other elements involved in the derivation of earned premium. Gross earned premium will not be reduced by the amount of contributions under the transitional reinsurance program. The MLR annual reporting form will then account for premium stabilization payment and receipt amounts other than the reinsurance contributions by removing them from adjusted earned premium, so that these amounts do not have a net impact on the adjusted earned premium used in calculating the MLR denominator and rebates. Contributions under the transitional reinsurance program will be included with the Federal assessments that are deducted from earned premium in MLR and rebate calculations. Additionally, this final rule amends the MLR calculation methodology to add or subtract premium stabilization payment and receipt amounts, other than reinsurance contributions, in the MLR numerator, consistent with the way the statute prescribes the calculation methodology for risk corridors. These adjustments will reduce or increase issuers' MLRs, and may increase or reduce issuers' rebates, respectively. The amended methodology will result in a more accurate calculation of MLR and rebate amounts, since it will reflect issuers' actual claims-related expenditures. This approach will also support the effectiveness of both the MLR and the premium stabilization programs by correctly offsetting the premium stabilization payment and receipt amounts against rebates, consistently with the risk corridors calculation methodology adopted in § 153.530.

Based on HHS's experience with the 2011 MLR reporting year, there are 466 health insurance issuers[49] offering

[47] Available at: *http://cciio.cms.gov/resources/files/Files2/03162012/hie3r-ria-032012.pdf.*

[48] Dafny, L., Ho, K., & Varela, M. (2010). *Let them have choice: Gains from shifting away from employer-sponsored health insurance and toward an individual exchange* (No. w15687). National Bureau of Economic Research.

[49] Issuers represent companies (for example, NAIC company code). These estimates do not

Continued

coverage in the individual and group markets to almost 80 million enrollees that will be affected by the proposed amendment to account for premium stabilization payments in MLR and rebate calculations. In 2012, an estimated 54 issuers paid $396 million in rebates for the 2011 MLR reporting year to approximately 4 million enrollees in the individual markets, while 59 issuers in the small group market provided approximately $289 million in rebates to policyholders and subscribers on behalf of over 3 million enrollees, and 47 issuers in the large group market provided approximately $403 million in rebates to policyholders and subscribers on behalf of almost 6 million enrollees. Lack of data makes it difficult to predict how high-risk enrollees will be distributed among issuers and, therefore, how MLRs and total rebates would be affected. Issuers with relatively low-risk enrollees are likely to have positive net premium stabilization payments (that is, payments would be greater than receipts) and, if so, their MLRs will increase as a result of the amended MLR calculation methodology. If any of these issuers fail to meet the MLR standard, taking the premium stabilization payments and receipts into account in the MLR calculations will result in lower rebate payments. Issuers with relatively high-risk enrollees are likely to have positive net receipts (that is, receipts would be greater than payments) and, if so, their MLRs would decrease as a result. If any such issuer fails to meet the MLR standard, its rebate amount will increase. Since such issuers are likely to have high claims expenditures and therefore, high MLRs, they would be less likely to owe rebates. So we do not anticipate that rebates will go up for such issuers.

This final rule also changes the deadlines for MLR report submission and rebate payments so that the deadlines occur after all the premium stabilization payment and receipt amounts are determined. The change in the deadlines will allow issuers to calculate the MLR and rebate amounts based on actual calculated payments and receipts rather than estimated amounts and will improve the accuracy of the rebate payments and reports. This will also reinforce the effectiveness of the premium stabilization programs, since issuers are less likely to pay higher or lower rebates based on inaccurate payment and receipt estimations. Accordingly, this final rule changes the date of MLR reporting to the Secretary from June 1 to July 31, and the rebate due date from August 1 to September 30.

Issuers will also have to report their payments and receipts related to the premium stabilization programs in the annual MLR report beginning in the 2014 MLR reporting year. Once issuers calculate these amounts, which they will be required to do regardless of the MLR reporting requirements, the administrative cost of including these amounts in the report will be minimal.

The previous MLR calculation methodology allowed an issuer to deduct from premiums in the calculation of an issuer's MLR and rebates either the amount it paid in State premium taxes, or the amount of its community benefit expenditures up to a maximum of the highest premium tax rate in the State, whichever is greater, as provided in the final rule with comment period (76 FR 76574) published on December 7, 2011. This final rule amends the MLR methodology to allow a Federal income tax exempt not-for-profit issuer to deduct from premium both community benefit expenditures and State premium taxes, limited to the higher of the State's highest premium tax rate or 3 percent of premium. Other issuers will continue to use the previous methodology. This will create a level playing field for Federal income tax exempt not-for-profit issuers, who are required to make community benefit expenditures to maintain their Federal income tax exempt status and will not discourage community benefit expenditures. This is likely to increase the MLRs for tax exempt not-for-profit issuers. If any of these issuers fail to meet the MLR standard, then this will result in lower rebate payments.

Based on MLR annual reports submitted by issuers for the 2011 MLR reporting year, we estimate that there are 132 not-for-profit issuers that will be affected by this amendment. In the absence of data on tax exempt not-for-profit issuers, we use the estimates for not-for-profit issuers in our analysis. Therefore, the actual impact is likely to be lower. For the 20 not-for-profit issuers that submitted data on community benefit expenditures, such expenditures as a percentage of earned premiums ranged from 0.04 percent to 4.11 percent with an average of 1.57 percent, which is likely to be less than the current limit for most of the issuers and is less than the proposed limit as well. We assume that in 2012 issuers will maintain the level of community benefit expenditures as reported in their MLR annual reports for the 2011 MLR reporting year. Therefore, we estimate that under the current policy, in the 2012 MLR reporting year, 17 not-for-profit issuers will owe approximately $182 million in rebates to approximately 1.5 million enrollees, which is the same as the experience in the 2011 MLR reporting year. The adopted change in treatment of community benefit expenditures for such issuers will have minimal effect on their MLRs and rebates under this assumption, since their current expenditures are below the current deduction limits.

Issuers with lower rebate payments as a result of these adjustments will need to send fewer rebate notices, and therefore, will have lower administrative costs related to rebates and rebate notices.

D. Alternatives Considered

Risk Adjustment

We considered State flexibility for risk adjustment. This option would have allowed States to develop State-specific characteristics but it would have resulted in few Federal standards by which to compensate for risk. This final rule describes a HHS risk adjustment methodology but allows States to seek HHS approval for alternate methodologies based on criteria established in this final rule. This compromise gives States some flexibility but also reduces the burden on multi-State issuers and the Federal government.

Reinsurance

We proposed State flexibility to establish the reinsurance program in the Premium Stabilization Rule. This option would have allowed for State innovation, but it would have greatly increased the administrative burden on self-insured group health plans, multi-State issuers and the Federal government. A national approach is more efficient and less expensive. Moreover, we believe that uniform reinsurance payment parameters deliver payments where they are most needed—to issuers with high cost claims in the individual market. Centralized collection of contributions, an annual contribution and payment schedule, as well as a national contribution rate provide a more effective approach to stabilize premiums, while decreasing administrative burden.

Risk Corridors

Elsewhere in this issue of the **Federal Register**, we are implementing an alternative to our current policy, under which the risk corridor calculation

include issuers of plans with total annual limits of $250,000 or less (sometimes referred to as ''mini-med'' plans) or expatriate plans.

methodology compares plan-specific allowable costs (adjusted claims) to a target amount (adjusted premiums). In order to align the risk corridor calculation methodology with the single risk pool requirements finalized at § 156.80, we are modifying the definition of ''allowable costs'' for the risk corridors calculation at § 153.500 such that ''allowable costs'' are calculated in a manner consistent with the single risk pool requirement for premiums. We believe that this approach will better align risk sharing under the program with how issuers will be required to set rates. We address the burden associated with this approach in the Collection of Information Section of the interim final rule with comment ''Amendments to the HHS Notice of Benefit and Payment Parameters for 2014'', published elsewhere in this issue of the **Federal Register**.

Advance Payments of the Premium Tax Credit and Cost-Sharing Reductions

As discussed in section III.E.4.i, we considered requiring QHP issuers to provide cost-sharing reductions to Indians by waiving the cost sharing as appropriate, rather than assigning the eligible Indian to a particular plan variation. However, we believe this alternative approach would be too burdensome for issuers to implement in the short term. As discussed in section III.E.4.e, we are issuing an interim final rule with comment to provide QHP issuers with the option to submit data about the actual amount of cost-sharing reductions using an alternate methodology for purposes of payment reconciliation. This alternative will provide greater flexibility to issuers and may reduce the reporting burden for some issuers. We describe the burden associated with this alternative in the Collection of Information Section of the interim final rule with comment ''Amendments to the HHS Notice of Benefit and Payment Parameters for 2014'', published elsewhere in this issue of the **Federal Register**.

User Fees

We considered calculating user fees on a per capita basis, but that approach fails to adjust for premium variation and geographic wage differences, and commenters suggest that most issuers and stakeholders prefer that such costs be calculated as a percentage of premium.

SHOP

We considered making no change to the employer options in the FF–SHOP, but concluded that allowing employers the option of offering a single QHP to employees would simplify the transition from current market practices to the SHOP. We will be proposing further rulemaking to ease the transition from the current market to the SHOP.

We considered a range of threshold values for determining which issuers would be subject to the QHP certification requirement linking FFE and FF–SHOP participation and chose a threshold (20 percent market share) that minimized the number of issuers affected by the certification requirement while still ensuring that at least one large issuer in each State would offer QHPs in the FF–SHOP.

E. Regulatory Flexibility Act

The Regulatory Flexibility Act (5 U.S.C. 601 *et seq.*) (RFA) requires agencies to prepare a final regulatory flexibility analysis to describe the impact of the final rule on small entities, unless the head of the agency can certify that the rule will not have a significant economic impact on a substantial number of small entities. The RFA generally defines a ''small entity'' as (1) A proprietary firm meeting the size standards of the Small Business Administration (SBA), (2) a not-for-profit organization that is not dominant in its field, or (3) a small government jurisdiction with a population of less than 50,000. States and individuals are not included in the definition of ''small entity.'' HHS uses a change in revenues of more than three to five percent as its measure of significant economic impact on a substantial number of small entities.

This final rule contains rules for premium stabilization programs required of health plan issuers and self-insured group health plans. These programs include the risk adjustment program, the transitional reinsurance program and the temporary risk corridors programs. Because we believe that few insurance firms offering comprehensive health insurance policies fall below the size thresholds for ''small entities'' established by the SBA, we do not believe that a final regulatory flexibility analysis is required with respect to such firms.

For purposes of the RFA, we expect the following types of entities to be affected by this final rule: (1) Health insurance issuers; (2) health insurance plan sponsors; (3) applicable reinsurance entities; (4) risk adjustment entities; (5) self-insured group health plans and (6) third-party administrators. We believe that health insurance issuers and plan sponsors would be classified under the North American Industry Classification System (NAICS) code 524114 (Direct Health and Medical Insurance Carriers); applicable reinsurance entities, risk adjustment entities and third party administrators would be classified under NAICS codes 524130 (Reinsurance Carriers), 524298 (Actuarial Services) and 524292 (Third Party Administration of Insurance). According to SBA size standards, entities with average annual receipts of $7 million or less would be considered small entities for these NAICS codes. Issuers could possibly be classified in 621491 (HMO Medical Centers) and, if this is the case, the SBA size standard would be $10 million or less.

Based on data from Medical Loss Ratio annual report submissions for the 2011 MLR reporting year, there are 22 small entities (companies), each with less than $7 million in earned premiums, that offer individual or group health insurance coverage and would therefore be subject to the provisions related to MLR. Thirty six percent of these small issuers belong to holding groups, and many if not all of these small issuers are likely to have other lines of business that would result in their revenues exceeding $7 million.

We believe that a number of sponsors of self-insured group health plans could qualify as ''small entities.'' This final rule specifies that third-party administrators may incur the operational costs associated with submitting reinsurance contributions to HHS. We do not believe that the reinsurance contribution amount or the operational cost associated with submitting the contribution are likely to result in a change in revenues of more than 3 to 5 percent for a substantial number of self-insured group health plans or third-party administrators that meet the definition of a small entity. We requested comment on whether the small entities affected by the proposed rule have been fully identified. We also requested comment and information on potential costs for these entities and on any alternatives that we should consider.

Comment: We received no comments on whether the small entities described in this rule have been fully identified or on potential costs to them. However, one State expressed concern that the number of small self-insured entities is expected to grow and could cause an uneven playing field if not included in reinsurance contribution assessments. The State said maintaining a level playing field is desirable so as not to provide additional incentive to self-insure and thereby deny employees the consumer protection applicable to insured products on the Exchange.

Response: We are aware that a growing number of small entities may consider self-insuring since self-insured groups are exempt from community ratings and minimum health care benefits. HHS will collect reinsurance contributions on a per enrollee basis from all self-insured group health plans regardless of their size. This will help ensure that entities are not incentivized to self-insure in order to avoid making reinsurance contributions. Because these contributions will be calculated on a per capita basis, we believe that is it unlikely that the amount of these contributions (or the operational costs associated with making these contributions) will result in a significant change in revenue for a substantial number of small entities.

In this final rule, we establish requirements on employers that choose to participate in a SHOP Exchange. As discussed above, the SHOP is limited by statute to employers with at least one but not more than 100 employees. For this reason, we expect that many employers would meet the SBA standard for small entities. We do not believe that the regulation imposes requirements on employers offering health insurance through SHOP that are more restrictive than the current requirements on small employers offering employer-sponsored coverage. For example, the FF–SHOP will generally match existing minimum participation rates in the outside market. Additionally, as discussed in the regulatory impact analysis, we believe the employee choice option will ultimately provide greater choice for the employee among QHPs and issuers, benefitting both employer and employee and simplifying the process for the employer of administering multiple health benefit plans while allowing a SHOP to let an employer choose one plan eases the transition from the current marketplace. We believe the processes that we have established constitute the minimum amount of requirements necessary to implement statutory mandates and accomplish our policy goals, and that no appropriate regulatory alternatives could be developed to further lessen the compliance burden.

F. Unfunded Mandates

Section 202 of the Unfunded Mandates Reform Act of 1995 (UMRA) requires that agencies assess anticipated costs and benefits and take certain other actions before issuing a final rule that includes any Federal mandate that may result in expenditures in any one year by a State, local, or Tribal governments, in the aggregate, or by the private sector, of $100 million in 1995 dollars, updated annually for inflation. In 2013, that threshold is approximately $141 million. Although we have not been able to quantify the user fees that will be associated with this rule, the combined administrative cost and user fee impact on State, local, or Tribal governments and the private sector may be above the threshold. Earlier portions of this RIA constitute our UMRA analysis.

G. Federalism

Executive Order 13132 establishes certain requirements that an agency must meet when it promulgates a final rule that imposes substantial direct costs on State and local governments, pre-empts State law, or otherwise has Federalism implications. Because States have flexibility in designing their risk adjustment, reinsurance, and Exchange-related programs, State decisions will ultimately influence both administrative expenses and overall premiums. States are not required to establish a risk adjustment or reinsurance program, or an Exchange.

In HHS's view, while this final rule does not impose substantial direct requirement costs on State and local governments, this regulation has Federalism implications due to direct effects on the distribution of power and responsibilities among the State and Federal governments relating to determining standards relating to health insurance that is offered in the individual and small group markets. Each State electing to establish a risk adjustment or reinsurance program or an Exchange must adopt the Federal standards contained in the Affordable Care Act and in this final rule, or have in effect a State law or regulation that implements these Federal standards. However, HHS anticipates that the Federalism implications (if any) are substantially mitigated because under the statute, States have choices regarding the structure and governance of these programs. Additionally, the Affordable Care Act does not require States to establish these programs; if a State elects not to establish these programs (or the State's risk adjustment program or Exchange is not approved), HHS must establish and operate these programs in that State.

In compliance with the requirement of Executive Order 13132 that agencies examine closely any policies that may have Federalism implications or limit the policy making discretion of the States, HHS has engaged in efforts to consult with and work cooperatively with affected States, including participating in conference calls with and attending conferences of the National Association of Insurance Commissioners, and consulting with State insurance officials on an individual basis.

Throughout the process of developing this final rule, HHS has attempted to balance the States' interests in regulating health insurance issuers, and Congress' intent to provide access to Affordable Insurance Exchanges for consumers in every State. By doing so, it is HHS's view that we have complied with the requirements of Executive Order 13132.

List of Subjects

45 CFR Part 153

Administrative practice and procedure, Adverse selection, Health care, Health insurance, Health records, Organization and functions (Government agencies), Premium stabilization, Reporting and recordkeeping requirements, Reinsurance, Risk adjustment, Risk corridors, Risk mitigation, State and local governments.

45 CFR Part 155

Administrative practice and procedure, Health care access, Health insurance, Reporting and recordkeeping requirements, State and local governments, Cost-sharing reductions, Advance payments of premium tax credit, Administration and calculation of advance payments of the premium tax credit, Plan variations, Actuarial value.

45 CFR Part 156

Administrative practice and procedure, Advertising, Advisory Committees, Brokers, Conflict of interest, Consumer protection, Grant programs-health, Grants administration, Health care, Health insurance, Health maintenance organization (HMO), Health records, Hospitals, American Indian/Alaska Natives, Individuals with disabilities, Loan programs-health, Organization and functions (Government agencies), Medicaid, Public assistance programs, Reporting and recordkeeping requirements, State and local governments, Sunshine Act, Technical assistance, Women, and Youth.

45 CFR Part 157

Employee benefit plans, Health insurance, Health maintenance organization (HMO), Health records, Hospitals, Indians, Individuals with disabilities, Organization and functions (Government agencies), Medicaid, Public assistance programs, Reporting and recordkeeping requirements, Safety,

State and local governments, Sunshine Act, Technical Assistance, Women, and Youth.

45 CFR Part 158

Administrative practice and procedure, Claims, Health care, Health insurance, Health plans, penalties, Reporting and recordkeeping requirements, Premium revenues, Medical loss ratio, Rebating.

For the reasons set forth in the preamble, the Department of Health and Human Services amends 45 CFR parts 153, 155, 156, 157 and 158 as set forth below:

PART 153—STANDARDS RELATED TO REINSURANCE, RISK CORRIDORS, AND RISK ADJUSTMENT UNDER THE AFFORDABLE CARE ACT

■ 1. The authority citation for part 153 continues to read as follows:

Authority: Secs. 1311, 1321, 1341–1343, Pub. L. 111–148, 24 Stat. 119.

■ 2. Section 153.20 is amended by revising the definitions of ''Contributing entity'', ''Risk adjustment covered plan'' and ''Risk adjustment data collection approach'' to read as follows:

§ 153.20 Definitions.

* * * * *

Contributing entity means a health insurance issuer or self-insured group health plan. A self-insured group health plan is responsible for the reinsurance contributions, though it may elect to use a third party administrator or administrative services only contractor for transfer of the reinsurance contributions.

* * * * *

Risk adjustment covered plan means, for the purpose of the risk adjustment program, any health insurance coverage offered in the individual or small group market with the exception of grandfathered health plans, group health insurance coverage described in § 146.145(c) of this subchapter, individual health insurance coverage described in § 148.220 of this subchapter, and any plan determined not to be a risk adjustment covered plan in the applicable Federally certified risk adjustment methodology.

* * * * *

Risk adjustment data collection approach means the specific procedures by which risk adjustment data is to be stored, collected, accessed, transmitted, and validated and the applicable timeframes, data formats, and privacy and security standards.

* * * * *

■ 3. Section 153.100 is amended by—

■ A. Revising paragraph (a)(1).

■ B. Removing paragraph (a)(2).

■ C. Redesignating paragraphs (a)(3) and (4) as paragraphs (a)(2) and (3).

■ D. Revising newly designated paragraph (a)(2).

■ E. Removing paragraph (a)(5).

■ F. Revising paragraph (d)(1).

■ G. Removing paragraph (d)(2).

■ H. Redesignating paragraphs (d)(3) and (4) as paragraphs (d)(2) and (3).

■ I. Revising newly designated paragraph (d)(2).

■ J. Removing paragraph (d)(5).

■ K. Redesignating paragraph (d)(6) as paragraph (d)(4).

■ The revisions read as follows:

§ 153.100 State notice of benefit and payment parameters.

(a) * * *

(1) Modify the data requirements for health insurance issuers to receive reinsurance payments from those specified in the annual HHS notice of benefit and payment parameters for the applicable benefit year;

(2) Collect additional reinsurance contributions under § 153.220(d)(1) or use additional funds for reinsurance payments under § 153.220(d)(2); or

* * * * *

(d) * * *

(1) Adhere to the data requirements for health insurance issuers to receive reinsurance payments that are specified in the annual HHS notice of benefit and payment parameters for the applicable benefit year;

(2) Forgo the collection of additional reinsurance contributions under § 153.220(d)(1) and the use of additional funds for reinsurance payments under § 153.220(d)(2);

* * * * *

■ 4. Section 153.110 is amended by:

■ A. Revising paragraph (a).

■ B. Removing paragraph (b).

■ C. Redesignating paragraph (c) as paragraph (b) and revising newly designated paragraph (b).

■ D. Redesignating paragraph (d) as paragraph (c).

■ E. Removing newly designated paragraph (c)(2).

■ F. Redesignating paragraph (c)(3) as paragraph (c)(2).

■ G. Removing newly designated paragraph (c)(4).

■ H. Removing newly designated paragraph (c)(5).

■ I. Redesignating paragraph (c)(6) as paragraph (c)(3).

■ J. Removing paragraph (e).

■ K. Redesignating paragraph (f) as paragraph (d).

The revisions read as follows:

§ 153.110 Standards for the State notice of benefit and payment parameters.

(a) *Data requirements.* If a State that establishes a reinsurance program elects to modify the data requirements for health insurance issuers to receive reinsurance payments from those specified in the annual HHS notice of benefit and payment parameters for the applicable benefit year, the State notice of benefit and payment parameters must specify those modifications.

(b) *Additional collections.* If a State that establishes a reinsurance program elects to collect additional funds under § 153.220(d)(1) or use additional funds for reinsurance payments under § 153.220(d)(2), the State must publish in the State notice of benefit and payment parameters the following:

(1) A description of the purpose of the additional collection, including whether it will be used to cover reinsurance payments made under § 153.232, administrative costs, or both;

(2) The additional contribution rate at which the funds will be collected; and

(3) If the purpose of the additional collection includes reinsurance payments (or if the State is using additional funds for reinsurance payments under § 153.220(d)(2)), the State supplemental reinsurance payment parameters required under § 153.232.

* * * * *

■ 5. Section 153.210 is amended by revising paragraph (a)(2) and adding paragraph (e) to read as follows:

§ 153.210 State establishment of a reinsurance program.

(a) * * *

(2) If a State contracts with or establishes more than one applicable reinsurance entity, the State must ensure that each applicable reinsurance entity operates in a distinct geographic area with no overlap of jurisdiction with any other applicable reinsurance entity.

* * * * *

(e) *Reporting to HHS.* Each State that establishes a reinsurance program must ensure that each applicable reinsurance entity provides information regarding requests for reinsurance payments under the national contribution rate made under § 153.410 for all reinsurance-eligible plans for each quarter during the applicable benefit year in a manner and timeframe established by HHS.

■ 6. Section 153.220 is amended by—

■ A. Revising paragraph (a).

■ B. Removing paragraph (b).

■ C. Redesignating paragraph (c) as paragraph (b).

■ D. Removing paragraph (d).

■ E. Redesignating paragraph (e) as paragraph (c).
■ F. Revising newly designated paragraph (c)(2).
■ G. Removing paragraph (f).
■ H. Redesignating paragraph (g) as paragraph (d).
■ I. Revising newly designated paragraph (d).
■ J. Removing paragraph (h).

The revisions read as follows:

§ 153.220 Collection of reinsurance contribution funds.

(a) *Collections.* If a State establishes a reinsurance program, HHS will collect all reinsurance contributions from all contributing entities for that State under the national contribution rate.

* * * * *

(c) * * *

(2) Payments to the U.S. Treasury as described in paragraph (b)(2) if this section; and

* * * * *

(d) *Additional State collections.* If a State establishes a reinsurance program:

(1) The State may elect to collect more than the amounts that would be collected based on the national contribution rate set forth in the annual HHS notice of benefit and payment parameters for the applicable benefit year to provide:

(i) Funding for administrative expenses of the applicable reinsurance entity; or

(ii) Additional funds for reinsurance payments.

(2) A State may use additional funds which were not collected as additional reinsurance contributions under this part for reinsurance payments under the State supplemental payment parameters under § 153.232.

* * * * *

■ 7. Section 153.230 is revised to read as follows:

§ 153.230 Calculation of reinsurance payments made under the national contribution rate.

(a) *Eligibility for reinsurance payments under the national reinsurance parameters.* A health insurance issuer of a reinsurance-eligible plan becomes eligible for reinsurance payments from contributions under the national contribution rate when its claims costs for an individual enrollee's covered benefits in a benefit year exceed the national attachment point.

(b) *National reinsurance payment parameters.* The national reinsurance payment parameters for each benefit year commencing in 2014 and ending in 2016 set forth in the annual HHS notice of benefit and payment parameters for each applicable benefit year will apply with respect to reinsurance payments made from contributions received under the national contribution rate.

(c) *National reinsurance payments.* Each reinsurance payment made from contributions received under the national contribution rate will be calculated as the product of the national coinsurance rate multiplied by the health insurance issuer's claims costs for an individual enrollee's covered benefits that the health insurance issuer incurs in the applicable benefit year between the national attachment point and the national reinsurance cap.

(d) *Uniform adjustment to national reinsurance payments.* If HHS determines that all reinsurance payments requested under the national payment parameters from all reinsurance-eligible plans in all States for a benefit year will exceed all reinsurance contributions collected under the national contribution rate in all States for an applicable benefit year, HHS will determine a uniform pro rata adjustment to be applied to all such requests for reinsurance payments for all States. Each applicable reinsurance entity, or HHS on behalf of a State, must reduce all requests for reinsurance payments for the applicable benefit year by any adjustment required under this paragraph (d).

■ 8. Section 153.232 is added to read as follows:

§ 153.232 Calculation of reinsurance payments made under a State additional contribution rate.

(a) *State supplemental reinsurance payment parameters.* (1) If a State establishes a reinsurance program and elects to collect additional contributions under § 153.220(d)(1)(ii) or use additional funds for reinsurance payments under § 153.220(d)(2), the State must set supplemental reinsurance payment parameters using one or more of the following methods:

(i) Decreasing the national attachment point;

(ii) Increasing the national reinsurance cap; or

(iii) Increasing the national coinsurance rate.

(2) The State must ensure that additional reinsurance contributions and funds projected to be received under § 153.220(d)(1)(ii) and § 153.220(d)(2), as applicable, for any applicable benefit year are reasonably calculated to cover additional reinsurance payments that are projected to be made only under the State supplemental reinsurance payment parameters (that will not be paid under the national payment parameters) for the given benefit year.

(3) All applicable reinsurance entities in a State collecting additional reinsurance contributions must apply the State supplemental reinsurance payment parameters established under paragraph (a)(1) of this section when calculating reinsurance payments.

(b) *General requirement for payments under State supplemental reinsurance parameters.* Contributions collected under § 153.220(d)(1)(ii) or funds under § 153.220(d)(2), as applicable, must be applied towards requests for reinsurance payments made under the State supplemental reinsurance payments parameters for each benefit year commencing in 2014 and ending in 2016.

(c) *Eligibility for reinsurance payments under State supplemental reinsurance parameters.* If a State establishes State supplemental reinsurance payment parameters under § 153.232(a)(1), a reinsurance-eligible plan becomes eligible for reinsurance payments from contributions under § 153.220(d)(1)(ii) or funds under § 153.220(d)(2), as applicable, if its incurred claims costs for an individual enrollee's covered benefits in the applicable benefit year:

(1) Exceed the State supplemental attachment point set forth in the State notice of benefit and payment parameters for the applicable benefit year if a State has established such a supplemental attachment point under § 153.232(a)(1)(i);

(2) Exceed the national reinsurance cap set forth in the annual HHS notice of benefit and payment parameters for the applicable benefit year if a State has established a State supplemental reinsurance cap under § 153.232(a)(1)(ii); or

(3) Exceed the national attachment point set forth in the annual HHS notice of benefit and payment parameters for the applicable benefit year if a State has established a supplemental coinsurance rate under § 153.232(a)(1)(iii).

(d) *Payments under State supplemental reinsurance parameters.* Each reinsurance payment made from contributions received under § 153.220(d)(1)(ii) or funds under § 153.220(d)(2), as applicable, will be calculated with respect to an issuer's incurred claims costs for an individual enrollee's covered benefits in the applicable benefit year as the sum of the following:

(1) If the State has established a State supplemental attachment point, to the extent the issuer's incurred claims costs for such benefits in the applicable benefit year exceed the State

supplemental attachment point but do not exceed the national attachment point, the product of such claims costs between the State supplemental attachment point and the national attachment point multiplied by the national coinsurance rate (or, if the State has established a State supplemental coinsurance rate, the State supplemental coinsurance rate);

(2) If the State has established a State supplemental reinsurance cap, to the extent the issuer's incurred claims costs for such benefits in the applicable benefit year exceed the national reinsurance cap but do not exceed the State supplemental reinsurance cap, the product of such claims costs between the national reinsurance cap and the State supplemental reinsurance cap multiplied by the national coinsurance rate (or, if the State has established a State supplemental coinsurance rate, the State supplemental coinsurance rate); and

(3) If the State has established a State supplemental coinsurance rate, the product of the issuer's incurred claims costs for such benefits in the applicable benefit year between the national attachment point and the national reinsurance cap multiplied by the difference between the State supplemental coinsurance rate and the national coinsurance rate.

(e) *Uniform adjustment to payments under State supplemental reinsurance payment parameters.* If all requested reinsurance payments under the State supplemental reinsurance parameters calculated in accordance with paragraph (a)(1) of this section from all reinsurance-eligible plans in a State for a benefit year will exceed all reinsurance contributions collected under § 153.220(d)(1)(ii) or funds under § 153.220(d)(2) for the applicable benefit year, the State must determine a uniform pro rata adjustment to be applied to all such requests for reinsurance payments. Each applicable reinsurance entity in the State must reduce all such requests for reinsurance payments for the applicable benefit year by that adjustment.

(f) *Limitations on payments under State supplemental reinsurance parameters.* A State must ensure that:

(1) The payments made to issuers must not exceed the issuer's total paid amount for the reinsurance-eligible claim(s); and

(2) Any remaining additional funds for reinsurance payments collected under § 153.220(d)(1)(ii) must be used for reinsurance payments under the State supplemental reinsurance payment parameters in subsequent benefit years.

■ 9. Section 153.234 is added to read as follows:

§ 153.234 Eligibility under health insurance market rules.

A reinsurance-eligible plan's covered claims costs for an enrollee incurred prior to the application of the following provisions do not count towards either the national reinsurance payment parameters or the State supplemental reinsurance payment parameters: 45 CFR 147.102, 147.104 (subject to 147.145), 147.106 (subject to 147.145), 156.80, and subpart B of part 156.

■ 10. Section 153.235 is added to read as follows:

§ 153.235 Allocation and distribution of reinsurance contributions

(a) *Allocation of reinsurance contributions.* HHS will allocate and disburse to each State operating reinsurance (and will distribute directly to issuers if HHS is operating reinsurance on behalf of a State), reinsurance contributions collected from contributing entities under the national contribution rate for reinsurance payments. The disbursed funds would be based on the total requests for reinsurance payments made under the national reinsurance payment parameters in all States and submitted under § 153.410, net of any adjustment under § 153.230(d).

(b) *Excess reinsurance contributions.* Any reinsurance contributions collected from contributing entities under the national contribution rate for reinsurance payments for any benefit year but unused for the applicable benefit year will be used for reinsurance payments under the national reinsurance payment parameters for subsequent benefit years.

■ 11. Section 153.240 is amended by revising paragraphs (a) and (b) and by adding a new paragraph (d) to read as follows:

§ 153.240 Disbursement of reinsurance payments.

(a) *Data collection.* If a State establishes a reinsurance program, the State must ensure that the applicable reinsurance entity:

(1) Collects data required to determine reinsurance payments as described in § 153.230 and § 153.232, as applicable, from an issuer of reinsurance-eligible plans or is provided access to such data, according to the data requirements specified by the State in the State notice of benefit and payment parameters described in subpart B of this part.

(2) Makes reinsurance payments to the issuer of a reinsurance-eligible plan after receiving a valid claim for payment from that health insurance issuer in accordance with the requirements of § 153.410.

(3) Provides a process through which an issuer of a reinsurance-eligible plan that does not generate individual enrollee claims in the normal course of business may use estimated claims costs to make a request for payment (or to submit data to be considered for reinsurance payments) in accordance with the requirements of § 153.410. The State must ensure that such requests for reinsurance payment (or a subset of such requests) are subject to validation.

(b) *Notification of reinsurance payments.* For each applicable benefit year,

(1) A State, or HHS on behalf of the State, must notify issuers annually of:

(i) Reinsurance payments under the national payment parameters, and

(ii) Reinsurance payments under the State supplemental payment parameters if applicable, to be made for the applicable benefit year no later than June 30 of the year following the applicable benefit year.

(2) A State must provide to each issuer of a reinsurance-eligible plan the calculation of total reinsurance payment requests, on a quarterly basis during the applicable benefit year in a timeframe and manner specified by HHS, made under:

(i) The national reinsurance payment parameters, and

(ii) State supplemental reinsurance payments parameters if applicable.

* * * * *

(d) *Privacy and security.* (1) If a State establishes a reinsurance program, the State must ensure that the applicable reinsurance entity's collection of personally identifiable information is limited to information reasonably necessary for use in the calculation of reinsurance payments, and that use and disclosure of personally identifiable information is limited to those purposes for which the personally identifiable information was collected (including for purposes of data validation).

(2) If a State establishes a reinsurance program, the State must ensure that the applicable reinsurance entity implements security standards that provide administrative, physical, and technical safeguards for the personally identifiable information consistent with the security standards described at 45 CFR 164.308, 164.310, and 164.312.

■ 12. Section 153.310 is amended by:

■ A. Redesignating paragraphs (c) and (d) as paragraphs (e) and (f), respectively.

■ B. Adding new paragraphs (a)(4), (c) and (d).

The additions read as follows:

§ 153.310 Risk adjustment administration.

(a) * * *

(4) Beginning in 2015, any State that is approved to operate an Exchange and elects to operate risk adjustment but has not been approved by HHS to operate risk adjustment prior to publication of its State notice of benefit and payment parameters for the applicable benefit year, will forgo implementation of all State functions in this subpart, and HHS will carry out all of the provisions of this subpart on behalf of the State.

* * * * *

(c) *State responsibility for risk adjustment.* (1) A State operating a risk adjustment program for a benefit year must administer the applicable Federally certified risk adjustment methodology through an entity that—

(i) Is operationally ready to implement the applicable Federally certified risk adjustment methodology and process the resulting payments and charges; and

(ii) Has experience relevant to operating the risk adjustment program.

(2) The State must ensure that the risk adjustment entity complies with all applicable provisions of subpart D of this part in the administration of the applicable Federally certified risk adjustment methodology.

(3) The State must conduct oversight and monitoring of its risk adjustment program.

(d) *Certification for a State to operate risk adjustment.* (1) To be approved by HHS to operate risk adjustment under a particular Federally certified risk adjustment methodology for a benefit year, a State must establish that it and its risk adjustment entity meet the standards set forth in paragraph (c) of this section.

(2) To obtain such approval, the State must submit to HHS, in a form and manner specified by HHS, evidence that its risk adjustment entity meets these standards.

* * * * *

■ 13. Section 153.320 is amended by revising paragraphs (a)(1) and (a)(2) to read as follows:

§ 153.320 Federally certified risk adjustment methodology.

(a) * * *

(1) The risk adjustment methodology is developed by HHS and published in the applicable annual HHS notice of benefit and payment parameters; or

(2) An alternate risk adjustment methodology is submitted by a State in accordance with § 153.330, reviewed and certified by HHS, and published in the applicable annual HHS notice of benefit and payment parameters.

* * * * *

■ 14. Section 153.330 is amended by—

■ A. Redesignating paragraph (b) as paragraph (c).

■ B. Adding new paragraph (b).

The additions read as follows:

§ 153.330 State alternate risk adjustment methodology.

* * * * *

(b) *Evaluation criteria for alternate risk adjustment methodology.* An alternate risk adjustment methodology will be certified by HHS as a Federally certified risk adjustment methodology based on the following criteria:

(1) The criteria listed in paragraph (a)(2) of this section;

(2) Whether the methodology complies with the requirements of this subpart D;

(3) Whether the methodology accounts for risk selection across metal levels; and

(4) Whether each of the elements of the methodology are aligned.

* * * * *

■ 15. Section 153.340 is amended by revising paragraph (b)(3) to read as follows:

§ 153.340 Data collection under risk adjustment.

* * * * *

(b) * * *

(3) If a State is operating a risk adjustment program, the State must ensure that any collection of personally identifiable information is limited to information reasonably necessary for use in the applicable risk adjustment model, calculation of plan average actuarial risk, or calculation of payments and charges. Except for purposes of data validation, the State may not collect or store any personally identifiable information for use as a unique identifier for an enrollee's data, unless such information is masked or encrypted by the issuer, with the key to that masking or encryption withheld from the State. Use and disclosure of personally identifiable information is limited to those purposes for which the personally identifiable information was collected (including for purposes of data validation).

* * * * *

■ 16. Section 153.360 is added to subpart D to read as follows:

§ 153.360 Application of risk adjustment to the small group market.

Enrollees in a risk adjustment covered plan must be assigned to the applicable risk pool in the State in which the employer's policy was filed and approved.

■ 17. Section 153.400 is revised to read as follows:

§ 153.400 Reinsurance contribution funds.

(a) *General requirement.* Each contributing entity must make reinsurance contributions annually: at the national contribution rate for all reinsurance contribution enrollees, in a manner specified by HHS; and at the additional State supplemental contribution rate if the State has elected to collect additional contributions under § 153.220(d)(1), in a manner specified by the State.

(1) A contributing entity must make reinsurance contributions for its self-insured group health plans and health insurance coverage except to the extent that:

(i) Such plan or coverage is not major medical coverage;

(ii) In the case of health insurance coverage, such coverage is not considered to be part of an issuer's commercial book of business;

(iii) Such plan or coverage is expatriate health coverage, as defined by the Secretary; or

(iv) In the case of employer-provided health coverage, such coverage applies to individuals with respect to which benefits under Title XVIII of the Act (Medicare) are primary under the Medicare Secondary Payor rules under section 1862(b) of the Act and the regulations issued thereunder.

(2) Accordingly, as specified in paragraph (a)(1) of this section, a contributing entity is not required to make contributions on behalf of the following:

(i) A self-insured group health plan or health insurance coverage that consists solely of excepted benefits as defined by section 2791(c) of the PHS Act;

(ii) Coverage offered by an issuer under contract to provide benefits under any of the following titles of the Act:

(A) Title XVIII (Medicare);

(B) Title XIX (Medicaid); or

(C) Title XXI (Children's Health Insurance Program);

(iii) A Federal or State high-risk pool, including the Pre-Existing Condition Insurance Plan Program;

(iv) Basic health plan coverage offered by issuers under contract with a State as described in section 1331 of the Affordable Care Act;

(v) A health reimbursement arrangement within the meaning of IRS Notice 2002–45 (2002–2 CB 93) or any subsequent applicable guidance, that is integrated with a self-insured group health plan or health insurance coverage;

(vi) A health savings account within the meaning of section 223(d) of the Code;

(vii) A health flexible spending arrangement within the meaning of section 125 of the Code;

(viii) An employee assistance plan, disease management program, or wellness program that does not provide major medical coverage;

(ix) A stop-loss policy or an indemnity reinsurance policy;

(x) TRICARE and other military health benefits for active and retired uniformed services personnel and their dependents;

(xi) A plan or coverage provided by an Indian Tribe to Tribal members and their spouses and dependents (and other persons of Indian descent closely affiliated with the Tribe), in the capacity of the Tribal members as Tribal members (and not in their capacity as current or former employees of the Tribe or their dependents);

(xii) Health programs operated under the authority of the Indian Health Service; or

(xiii) A self-insured group health plan or health insurance coverage that consists solely of benefits for prescription drugs.

(b) *Data requirements.* Each contributing entity must submit to HHS data required to substantiate the contribution amounts for the contributing entity, in the manner and timeframe specified by HHS.

■ 18. Section 153.405 is added to read as follows:

§ 153.405 Calculation of reinsurance contributions.

(a) *In general.* The reinsurance contribution required from a contributing entity for its reinsurance contribution enrollees during a benefit year is calculated by multiplying:

(1) The number of covered lives of reinsurance contribution enrollees during the applicable benefit year for all plans and coverage described in § 153.400(a)(1) of the contributing entity; by

(2) The contribution rate for the applicable benefit year.

(b) *Annual enrollment count.* No later than November 15 of benefit year 2014, 2015, or 2016, as applicable, a contributing entity must submit an annual enrollment count of the number of covered lives of reinsurance contribution enrollees for the applicable benefit year to HHS. The count must be determined as specified in paragraphs (d) or (e) of this section, as applicable.

(c) *Notification and payment.* (1) Within 30 days of the submission of the annual enrollment count described in paragraph (b) of this section or by December 15 of the applicable benefit year, whichever is later, HHS will notify the contributing entity of the reinsurance contribution amount to be paid for the applicable benefit year.

(2) A contributing entity must remit reinsurance contributions to HHS within 30 days after the date of the notification.

(d) *Procedures for counting covered lives for health insurance issuers.* To determine the number of covered lives of reinsurance contribution enrollees under a health insurance plan for a benefit year, a health insurance issuer must use one of the following methods:

(1) Adding the total number of lives covered for each day of the first nine months of the benefit year and dividing that total by the number of days in the first nine months;

(2) Adding the total number of lives covered on any date (or more dates, if an equal number of dates are used for each quarter) during the same corresponding month in each of the first three quarters of the benefit year, and dividing that total by the number of dates on which a count was made. For this purpose, the same months must be used for each quarter (for example January, April and July) and the date used for the second and third quarter must fall within the same week of the quarter as the corresponding date used for the first quarter; or

(3) Multiplying the average number of policies in effect for the first nine months of the benefit year by the ratio of covered lives per policy in effect, calculated using the prior National Association of Insurance Commissioners (NAIC) Supplemental Health Care Exhibit (or a form filed with the issuer's State of domicile for the most recent time period).

(e) *Procedures for counting covered lives for self-insured group health plans.* To determine the number of covered lives of reinsurance contribution enrollees under a self-insured group health plan for a benefit year, a plan must use one of the following methods:

(1) One of the methods specified in either paragraph (d)(1) or paragraph (d)(2) of this section;

(2) Adding the total number of lives covered on any date (or more dates, if an equal number of dates are used for each quarter) during the same corresponding month in each of the first three quarters of the benefit year (provided that the date used for the second and third quarters must fall within the same week of the quarter as the corresponding date used for the first quarter), and dividing that total by the number of dates on which a count was made, except that the number of lives covered on a date is calculated by adding the number of participants with self-only coverage on the date to the product of the number of participants with coverage other than self-only coverage on the date and a factor of 2.35. For this purpose, the same months must be used for each quarter (for example, January, April, and July); or

(3) Using the number of lives covered for the benefit year calculated based upon the ''Annual Return/Report of Employee Benefit Plan'' filed with the Department of Labor (Form 5500) for the last applicable time period. For purposes of this paragraph (e)(3), the number of lives covered for the benefit year for a plan offering only self-only coverage equals the sum of the total participants covered at the beginning and end of the benefit year, as reported on the Form 5500, divided by 2, and the number of lives covered for the benefit year for a plan offering self-only coverage and coverage other than self-only coverage equals the sum of the total participants covered at the beginning and the end of the benefit year, as reported on the Form 5500.

(f) *Procedures for counting covered lives for group health plans with a self-insured coverage option and an insured coverage option.*

(1) To determine the number of covered lives of reinsurance contribution enrollees under a group health plan with a self-insured coverage option and an insured coverage option for a benefit year, a plan must use one of the methods specified in either paragraph (d)(1) or paragraph (d)(2) of this section.

(2) Notwithstanding paragraph (f)(1), a plan with multiple coverage options may use any of the counting methods specified for self-insured coverage or insured coverage, as applicable to each option, if it determines the number of covered lives under each option separately as if each coverage option provided major medical coverage (not including any coverage option that consists solely of excepted benefits as defined by section 2791(c) of the PHS Act, that only provides benefits related to prescription drugs, or that is a health reimbursement arrangement, health savings account, or health flexible spending arrangement).

(g) *Multiple group health plans maintained by the same plan sponsor.*

(1) *General rule.* If a plan sponsor maintains two or more group health plans (including one or more group health plans that provide health insurance coverage) that collectively provide major medical coverage for the same covered lives simultaneously, then

those multiple plans must be treated as a single group health plan for purposes of calculating any reinsurance contribution amount due under this section. However, a plan sponsor may treat the multiple plans as separate group health plans for purposes of calculating any reinsurance contribution due under this section if it determines the number of covered lives under each separate group health plan as if the separate group health plan provided major medical coverage.

(2) *Plan sponsor.* For purposes of this paragraph (g), the term ''plan sponsor'' means:

(i) The employer, in the case of a plan established or maintained by a single employer;

(ii) The employee organization, in the case of a plan established or maintained by an employee organization;

(iii) The joint board of trustees, in the case of a multiemployer plan (as defined in section 414(f) of the Code);

(iv) The committee, in the case of a multiple employer welfare arrangement;

(v) The cooperative or association that establishes or maintains a plan established or maintained by a rural electric cooperative or rural cooperative association (as such terms are defined in section 3(40)(B) of ERISA);

(vi) The trustee, in the case of a plan established or maintained by a voluntary employees' beneficiary association (meaning that the association is not merely serving as a funding vehicle for a plan that is established or maintained by an employer or other person);

(vii) In the case of a plan, the sponsor of which is not described in paragraph (g)(2)(i) through (g)(2)(vi) of this section, the person identified by the terms of the document under which the plan is operated as the plan sponsor, or the person designated by the terms of the document under which the plan is operated as the plan sponsor, provided that designation is made, and that person has consented to the designation, by no later than the date by which the count of covered lives for that benefit year is required to be provided, after which date that designation for that benefit year may not be changed or revoked, and provided further that a person may be designated as the plan sponsor only if the person is one of the persons maintaining the plan (for example, one of the employers that is maintaining the plan with one or more other employers or employee organizations); or

(viii) In the case of a plan, the sponsor of which is not described in paragraph (g)(2)(i) through (g)(2)(vi) of this section, and for which no identification or designation of a plan sponsor has been made under paragraph (g)(2)(i)(vii) of this section, each employer that maintains the plan (with respect to employees of that employer), each employee organization that maintains the plan (with respect to members of that employee organization), and each board of trustees, cooperative or association that maintains the plan.

(3) *Exception.* A plan sponsor is not required to include as part of a single group health plan as determined under paragraph (g)(1) of this section any group health plan that consists solely of excepted benefits as defined by section 2791(c) of the PHS Act, that only provides benefits related to prescription drugs, or that is a health reimbursement arrangement, health savings account, or health flexible spending arrangement.

(4) *Procedures for counting covered lives for multiple group health plans treated as a single group health plan.* The rules in this paragraph (g)(4) govern the determination of the average number of covered lives in a benefit year for any set of multiple self-insured group health plans or health insurance plans (or a combination of one or more self-insured group health plans and one or more health insurance plans) that are treated as a single group health plan under paragraph (g)(1) of this section.

(i) *Multiple group health plans including an insured plan.* If at least one of the multiple plans is an insured plan, the average number of covered lives of reinsurance contribution enrollees must be calculated using one of the methods specified in either paragraph (d)(1) or paragraph (d)(2) of this section, applied across the multiple plans as a whole. The following information must be determined by the plan sponsor and reported to HHS, in a manner and timeframe specified by HHS:

(A) The average number of covered lives calculated;

(B) The counting method used; and

(C) The names of the multiple plans being treated as a single group health plan as determined by the plan sponsor and reported to HHS.

(ii) *Multiple group health plans not including an insured plan.* If each of the multiple plans is a self-insured group health plan, the average number of covered lives of reinsurance contribution enrollees must be calculated using one of the methods specified either in paragraph (e)(1) or paragraph (e)(2) of this section, applied across the multiple plans as a whole. The following information must be determined by the plan sponsor and reported to HHS, in a manner and timeframe specified by HHS:

(A) The average number of covered lives calculated;

(B) The counting method used; and

(C) The names of the multiple plans being treated as a single group health plan as determined by the plan sponsor.

■ 19. Section 153.410 is amended by revising paragraph (a) as follows:

§ 153.410 Requests for reinsurance payments.

(a) *General requirement.* An issuer of a reinsurance-eligible plan may make a request for payment when that issuer's claims costs for an enrollee of that reinsurance-eligible plan has met the criteria for reinsurance payment set forth in subpart B of this part and the HHS notice of benefit and payment parameters and State notice of benefit and payment parameters for the applicable benefit year, if applicable.

* * * * *

■ 20. Section 153.420 is added to subpart E to read as follows:

§ 153.420 Data collection.

(a) *Data requirement.* To be eligible for reinsurance payments, an issuer of a reinsurance-eligible plan must submit or make accessible all required reinsurance data in accordance with the reinsurance data collection approach established by the State, or by HHS on behalf of the State.

(b) *Deadline for submission of data.* An issuer of a reinsurance-eligible plan must submit or make accessible data to be considered for reinsurance payments for the applicable benefit year by April 30 of the year following the end of the applicable benefit year.

■ 21. Section 153.500 is amended by—

■ A. Revising the definitions of ''Administrative costs'' and ''Allowable administrative costs.''

■ B. Adding the definitions of ''After-tax premiums earned,'' ''Profits,'' and ''Taxes and regulatory fees'' in alphabetical order.

The revisions and additions read as follows:

§ 153.500 Definitions.

* * * * *

Administrative costs mean, with respect to a QHP, total non-claims costs incurred by the QHP issuer for the QHP, including taxes and regulatory fees.

After-tax premiums earned mean, with respect to a QHP, premiums earned with respect to the QHP minus taxes and regulatory fees.

Allowable administrative costs mean, with respect to a QHP, the sum of administrative costs of the QHP, other than taxes and regulatory fees, plus profits earned by the QHP, which sum is limited to 20 percent of after-tax

premiums earned with respect to the QHP (including any premium tax credit under any governmental program), plus taxes and regulatory fees.

* * * * *

Profits mean, with respect to a QHP, the greater of:

(1) Three percent of after-tax premiums earned, and

(2) Premiums earned of the QHP minus the sum of allowable costs and administrative costs of the QHP.

* * * * *

Taxes and regulatory fees mean, with respect to a QHP, Federal and State licensing and regulatory fees paid with respect to the QHP as described in § 158.161(a) of this subchapter, and Federal and State taxes and assessments paid with respect to the QHP as described in § 158.162(a)(1) and (b)(1) of this subchapter.

* * * * *

■ 22. Section 153.510 is amended by adding new paragraph (d) to read as follows:

§ 153.510 Risk corridors establishment and payment methodology.

* * * * *

(d) *Charge submission deadline.* A QHP issuer must remit charges to HHS within 30 days after notification of such charges.

■ 23. Section 153.520 is amended by revising paragraph (d) to read as follows:

§ 153.520 Attribution and allocation of revenue and expense items.

* * * * *

(d) *Attribution of reinsurance and risk adjustment to benefit year.* A QHP issuer must attribute reinsurance payments and risk adjustment payments and charges to allowable costs for the benefit year with respect to which the reinsurance payments or risk adjustment calculations apply.

* * * * *

■ 24. Section 153.530 is amended by—

■ A. Revising paragraphs (a), (b) introductory text, (b)(1), (b)(2)(iii), and (c).

■ B. Adding new paragraph (d).

The revisions and additions read as follows:

§ 153.530 Risk corridors data requirements.

(a) *Premium data.* A QHP issuer must submit to HHS data on the premiums earned with respect to each QHP that the issuer offers in a manner specified by HHS.

(b) *Allowable costs.* A QHP issuer must submit to HHS data on the allowable costs incurred with respect to each QHP that the QHP issuer offers in a manner specified by HHS. For purposes of this subpart, allowable costs must be—

(1) Increased by any risk adjustment charges paid by the issuer for the QHP under the risk adjustment program established under subpart D of this part.

(2) * * *

(iii) Any cost-sharing reduction payments received by the issuer for the QHP to the extent not reimbursed to the provider furnishing the item or service.

(c) *Allowable administrative costs.* A QHP issuer must submit to HHS data on the allowable administrative costs incurred with respect to each QHP that the QHP issuer offers in a manner specified by HHS.

(d) *Timeframes.* For each benefit year, a QHP issuer must submit all information required under this section by July 31 of the year following the benefit year.

■ 25. Section 153.610 is amended by adding paragraph (f) to read as follows:

§ 153.610 Risk adjustment issuer requirements.

* * * * *

(f) *Assessment and collection of user fees for HHS risk adjustment operations.* Where HHS is operating risk adjustment on behalf of a State, an issuer of a risk adjustment covered plan (other than a student health plan or a plan not subject to 45 CFR 147.102, 147.104, 147.106, 156.80, and subpart B of part 156) must, for each benefit year—

(1) Submit or make accessible to HHS its monthly enrollment for the risk adjustment covered plan for the benefit year through the risk adjustment data collection approach established at § 153.610(a), in a manner and timeframe specified by HHS; and

(2) Remit to HHS an amount equal to the product of its monthly enrollment in the risk adjustment covered plan multiplied by the per-enrollee-per-month risk adjustment user fee specified in the annual HHS notice of benefit and payment parameters for the applicable benefit year.

■ 26. Section 153.630 is added to subpart G to read as follows:

§ 153.630 Data validation requirements when HHS operates risk adjustment.

(a) *General requirement.* An issuer of a risk adjustment covered plan in a State where HHS is operating risk adjustment on behalf of the State for the applicable benefit year must have an initial and second validation audit performed on its risk adjustment data as described in this section.

(b) *Initial validation audit.* (1) An issuer of a risk adjustment covered plan must engage one or more independent auditors to perform an initial validation audit of a sample of its risk adjustment data selected by HHS.

(2) The issuer must ensure that the initial validation auditors are reasonably capable of performing an initial data validation audit according to the standards established by HHS for such audit, and must ensure that the audit is so performed.

(3) The issuer must ensure that each initial validation auditor is reasonably free of conflicts of interest, such that it is able to conduct the initial validation audit in an impartial manner and its impartiality is not reasonably open to question.

(4) The issuer must ensure validation of the accuracy of risk adjustment data for a sample of enrollees selected by HHS. The issuer must ensure that the initial validation audit findings are submitted to HHS in a manner and timeframe specified by HHS.

(c) *Second validation audit.* HHS will select a subsample of the risk adjustment data validated by the initial validation audit for a second validation audit. The issuer must comply with, and must ensure the initial validation auditor complies with, standards for such audit established by HHS, and must cooperate with, and must ensure that the initial validation auditor cooperates with, HHS and the second validation auditor in connection with such audit.

(d) *Data validation appeals.* An issuer may appeal the findings of a second validation audit or the application of a risk score error rate to its risk adjustment payments and charges.

(e) *Adjustment of payments and charges.* HHS may adjust payments and charges for issuers that do not comply with audit requirements and standards, as specified in paragraphs (b) and (c) of this section.

(f) *Data security and transmission.* (1) An issuer must submit the risk adjustment data and source documentation for the initial and second validation audits specified by HHS to HHS or its designee in the manner and timeframe specified by HHS.

(2) An issuer must ensure that it and its initial validation auditor comply with the security standards described at 45 CFR 164.308, 164.310, and 164.312 in connection with the initial validation audit, the second validation audit, and any appeal.

■ 27. Subpart H is added to read as follows:

Subpart H—Distributed Data Collection for HHS-Operated Programs

Sec.
153.700 Distributed data environment.
153.710 Data requirements.
153.720 Establishment and usage of masked enrollee identification numbers.
153.730 Deadline for submission of data.

Subpart H—Distributed Data Collection for HHS-Operated Programs

§ 153.700 Distributed data environment.

(a) *Dedicated distributed data environments.* For each benefit year in which HHS operates the risk adjustment or reinsurance program on behalf of a State, an issuer of a risk adjustment covered plan or a reinsurance-eligible plan in the State, as applicable, must establish a dedicated data environment and provide data access to HHS, in a manner and timeframe specified by HHS, for any HHS-operated risk adjustment and reinsurance program.

(b) *Timeline.* An issuer must establish the dedicated data environment (and confirm proper establishment through successfully testing the environment to conform with applicable HHS standards for such testing) three months prior to the first date of full operation.

§ 153.710 Data requirements.

(a) *Enrollment, claims, and encounter data.* An issuer of a risk adjustment covered plan or a reinsurance-eligible plan in a State in which HHS is operating the risk adjustment or reinsurance program, as applicable, must provide to HHS, through the dedicated data environment, access to enrollee-level plan enrollment data, enrollee claims data, and enrollee encounter data as specified by HHS.

(b) *Claims data.* All claims data submitted by an issuer of a risk adjustment covered plan or a reinsurance-eligible plan in a State in which HHS is operating the risk adjustment or reinsurance program, as applicable, must have resulted in payment by the issuer (or payment of cost sharing by the enrollee).

(c) *Claims data from capitated plans.* An issuer of a risk adjustment covered plan or a reinsurance-eligible plan in a State in which HHS is operating the risk adjustment or reinsurance program, as applicable, that does not generate individual enrollee claims in the normal course of business must derive the costs of all applicable provider encounters using its principal internal methodology for pricing those encounters. If the issuer does not have such a methodology, or has an incomplete methodology, it must supplement the methodology in a manner that yields derived claims that are reasonable in light of the specific service and insurance market that the plan is serving.

§ 153.720 Establishment and usage of masked enrollee identification numbers.

(a) *Enrollee identification numbers.* An issuer of a risk adjustment covered plan or a reinsurance-eligible plan in a State in which HHS is operating the risk adjustment or reinsurance program, as applicable, must—

(1) Establish a unique masked enrollee identification number for each enrollee; and

(2) Maintain the same masked enrollee identification number for an enrollee across enrollments or plans within the issuer, within the State, during a benefit year.

(b) *Prohibition on personally identifiable information.* An issuer of a risk adjustment covered plan or a reinsurance-eligible plan in a State in which HHS is operating the risk adjustment or reinsurance program on behalf of the State, as applicable, may not—

(1) Include enrollee's personally identifiable information in the masked enrollee identification number; or

(2) Use the same masked enrollee identification number for different enrollees enrolled with the issuer.

§ 153.730 Deadline for submission of data.

A risk adjustment covered plan or a reinsurance-eligible plan in a State in which HHS is operating the risk adjustment or reinsurance program, as applicable, must submit data to be considered for risk adjustment payments and charges and reinsurance payments for the applicable benefit year by April 30 of the year following the applicable benefit year.

PART 155—EXCHANGE ESTABLISHMENT STANDARDS AND OTHER RELATED STANDARDS UNDER THE AFFORDABLE CARE ACT

■ 28. The authority citation for part 155 continues to read as follows:

Authority: Secs. 1301, 1302, 1303, 1304, 1311, 1312, 1313, 1321, 1322, 1331, 1334, 1401, 1402, 1411, 1412, 1413.

■ 29. Section 155.20 is amended by—

■ A. Revising the definitions of ''Large employer'' and ''Small employer.''

■ B. Adding definitions of ''Federally-facilitated Exchange,'' ''Federally-facilitated SHOP,'' and ''Full-time employee'' in alphabetical order.

The revisions and additions read as follows:

§ 155.20 Definitions.

* * * * *

Federally-facilitated Exchange means an Exchange established and operated within a State by the Secretary under section 1321(c)(1) of the Affordable Care Act.

Federally-facilitated SHOP means a Small Business Health Options Program established and operated within a State by the Secretary under section 1321(c)(1) of the Affordable Care Act.

Full-time employee has the meaning given in section 4980H (c)(4) of the Code effective for plan years beginning on or after January 1, 2016, except for operations of a Federally-facilitated SHOP for which it is effective for plan years beginning on or after January 1, 2014 and in connection with open enrollment activities beginning October 1, 2013.

* * * * *

Large employer means, in connection with a group health plan with respect to a calendar year and a plan year, an employer who employed an average of at least 101 employees on business days during the preceding calendar year and who employs at least 1 employee on the first day of the plan year. In the case of plan years beginning before January 1, 2016, a State may elect to define large employer by substituting ''51 employees'' for ''101 employees.'' The number of employees shall be determined using the method set forth in section 4980H(c)(2) of the Code, effective for plan years beginning on or after January 1, 2016, except for operations of a Federally-facilitated SHOP for which the method shall be used for plan years beginning on or after January 1, 2014 and in connection with open enrollment activities beginning October 1, 2013.

* * * * *

Small employer means, in connection with a group health plan with respect to a calendar year and a plan year, an employer who employed an average of at least 1 but not more than 100 employees on business days during the preceding calendar year and who employs at least 1 employee on the first day of the plan year. In the case of plan years beginning before January 1, 2016, a State may elect to define small employer by substituting ''50 employees'' for ''100 employees.'' The number of employees shall be determined using the method set forth in section 4980H(c)(2) of the Code, effective for plan years beginning on or after January 1, 2016, except for operations of a Federally-facilitated SHOP for which the method shall be used for plan years beginning on or after January 1, 2014 and in connection with

open enrollment activities beginning October 1, 2013.

* * * * *

■ 30. Section 155.220 is amended by revising paragraph (b) to read as follows—

§ 155.220 Ability to States to permit agents and brokers to assist qualified individuals, qualified employers, or qualified employees enrolling in QHPs.

* * * * *

(b)(1) *Web site disclosure.* The Exchange or SHOP may elect to provide information regarding licensed agents and brokers on its Web site for the convenience of consumers seeking insurance through that Exchange and may elect to limit the information to information regarding licensed agents and brokers who have completed any required Exchange or SHOP registration and training process.

(2) A Federally-facilitated Exchange or SHOP will limit the information provided on its Web site regarding licensed agents and brokers to information regarding licensed agents and brokers who have completed registration and training.

* * * * *

■ 31. Section 155.305 is amended by revising paragraph (g)(3) to read as follows:

§ 155.305 Eligibility standards.

* * * * *

(g) * * *

(3) *Special rule for family policies.* To the extent that an enrollment in a QHP in the individual market offered through an Exchange under a single policy covers two or more individuals who, if they were to enroll in separate individual policies would be eligible for different cost sharing, the Exchange must deem the individuals under such policy to be collectively eligible only for the category of eligibility last listed below for which all the individuals covered by the policy would be eligible:

(i) Individuals not eligible for changes to cost sharing;

(ii) Individuals described in § 155.350(b) (the special cost-sharing rule for Indians regardless of income);

(iii) Individuals described in paragraph (g)(2)(iii) of this section;

(iv) Individuals described in paragraph (g)(2)(ii) of this section;

(v) Individuals described in paragraph (g)(2)(i) of this section; and

(vi) Individuals described in § 155.350(a) (the cost-sharing rule for Indians with household incomes under 300 percent of the FPL).

* * * * *

■ 32. Section 155.330 is amended by adding paragraph (g) to read as follows:

§ 155.330 Eligibility redetermination during a benefit year.

* * * * *

(g) *Recalculation of advance payments of the premium tax credit and cost-sharing reductions.* (1) When an eligibility redetermination in accordance with this section results in a change in the amount of advance payments of the premium tax credit for the benefit year, the Exchange must recalculate the amount of advance payments of the premium tax credit in such a manner as to—

(i) Account for any advance payments already made on behalf of the tax filer for the benefit year for which information is available to the Exchange, such that the recalculated advance payment amount is projected to result in total advance payments for the benefit year that correspond to the tax filer's total projected premium tax credit for the benefit year, calculated in accordance with 26 CFR 1.36B–3; and

(ii) Ensure that the advance payment provided on the tax filer's behalf is greater than or equal to zero and is calculated in accordance with 26 CFR 1.36B–3(d).

(2) When an eligibility redetermination in accordance with this section results in a change in cost-sharing reductions, the Exchange must determine an individual eligible for the category of cost-sharing reductions that corresponds to his or her expected annual household income for the benefit year (subject to the special rule for family policies set forth in § 155.305(g)(3)).

■ 33. Section 155.340 is amended by adding paragraphs (e), (f), and (g) to read as follows:

§ 155.340 Administration of advance payments of the premium tax credit and cost-sharing reductions.

* * * * *

(e) *Allocation of advance payments of the premium tax credit among policies.* If one or more advance payments of the premium tax credit are to be made on behalf of a tax filer (or two tax filers covered by the same plan(s)), and individuals in the tax filers' tax households are enrolled in more than one QHP or stand-alone dental plan, then the advance payment must be allocated as follows:

(1) That portion of the advance payment of the premium tax credit that is less than or equal to the aggregate adjusted monthly premiums, as defined in 26 CFR 1.36B–3(e), for the QHP policies properly allocated to EHB must be allocated among the QHP policies in a reasonable and consistent manner specified by the Exchange; and

(2) Any remaining advance payment of the premium tax credit must be allocated among the stand-alone dental policies in a reasonable and consistent manner specified by the Exchange.

(f) *Allocation of advance payments of the premium tax credit among policies offered through a Federally-facilitated Exchange.* If one or more advance payments of the premium tax credit are to be made on behalf of a tax filer (or two tax filers covered by the same plan(s)), and individuals in the tax filers' tax households are enrolled in more than one QHP or stand-alone dental plan offered through a Federally-facilitated Exchange, then that portion of the advance payment of the premium tax credit that is less than or equal to the aggregate adjusted monthly premiums, as defined in 26 CFR 1.36B–3(e), properly allocated to EHB for the QHP policies, will be allocated among the QHP policies, as described in § 155.340(f)(1); and any remaining advance payment of the premium tax credit will be allocated among the stand-alone dental policies based on the methodology described in § 155.340(f)(2).

(1) That portion of the advance payment(s) of the premium tax credit to be allocated among QHP policies will be allocated based on the number of enrollees covered under the QHP, weighted by the age of the enrollees, using the default uniform age rating curve established by the Secretary of HHS under 45 CFR 147.102(e), with the portion allocated to any single QHP policy not to exceed the portion of the QHP's adjusted monthly premium properly allocated to EHB. If the portion of the advance payment(s) of the premium tax credit allocated to a QHP under this subparagraph exceeds the portion of the same QHP's adjusted monthly premium properly allocated to EHB, the remainder will be allocated evenly among all other QHPs in which individuals in the tax filers' tax households are enrolled.

(2) That portion of the advance payment(s) of the premium tax credit to be allocated among stand-alone dental policies will be allocated based on the number of enrollees covered under the stand-alone dental policy, weighted by the age of the enrollees, using the default uniform age rating curve established by the Secretary of HHS under 45 CFR 147.102(e), with the portion allocated to any single stand-alone dental policy not to exceed the portion of the stand-alone dental policy premium properly allocated to EHB. If the portion of the advance payment(s) of the premium tax credit allocated to a stand-alone dental policy under this

subparagraph exceeds the portion of the same policy's premium properly allocated to EHB, the remainder will be allocated evenly among all other stand-alone dental policies in which individuals in the tax filers' tax households are enrolled.

(g) *Reduction of enrollee's portion of premium to account for advance payments of the premium tax credit.* If an Exchange is facilitating the collection and payment of premiums to QHP issuers and stand-alone dental plans on behalf of enrollees under § 155.240, and if a QHP issuer or stand-alone dental plan has been notified that it will receive an advance payment of the premium tax credit on behalf of an enrollee for whom the Exchange is facilitating such functions, the Exchange must—

(1) Reduce the portion of the premium for the policy collected from the individual for the applicable month(s) by the amount of the advance payment of the premium tax credit; and

(2) Include with each billing statement, as applicable, to or for the individual the amount of the advance payment of the premium tax credit for the applicable month(s) and the remaining premium owed for the policy.

■ 34. Section 155.705 is amended by revising paragraph (b)(3), (b)(10), and (b)(11) to read as follows:

§ 155.705 Functions of a SHOP.

* * * * *

(b) * * *

(3)(i) *SHOP options with respect to employer choice requirements.* With regard to QHPs offered through the SHOP, the SHOP may allow a qualified employer to make one or more QHPs available to qualified employees by a method other than the method described in paragraph (b)(2) of this section.

(ii) A Federally-facilitated SHOP will only permit a qualified employer to make available to qualified employees either:

(A) All QHPs at the level of coverage selected by the employer as described in paragraph (b)(2) of this section, or

(B) A single QHP.

* * * * *

(10) *Participation rules.* Subject to § 147.104 of this subchapter, the SHOP may authorize uniform group participation rules for the offering of health insurance coverage in the SHOP. If the SHOP authorizes a minimum participation rate, such rate must be based on the rate of employee participation in the SHOP, not on the rate of employee participation in any particular QHP or QHPs of any particular issuer.

(i) Subject to § 147.104 of this subchapter, a Federally-facilitated SHOP must use a minimum participation rate of 70 percent, calculated as the number of qualified employees accepting coverage under the employer's group health plan, divided by the number of qualified employees offered coverage, excluding from the calculation any employee who, at the time the employer submits the SHOP application, is enrolled in coverage through another employer's group health plan or through a governmental plan such as Medicare, Medicaid, or TRICARE.

(ii) Notwithstanding paragraph (b)(10)(i) of this section, a Federally-facilitated SHOP may utilize a different minimum participation rate in a State if there is evidence that a State law sets a minimum participation rate or that a higher or lower minimum participation rate is customarily used by the majority of QHP issuers in that State for products in the State's small group market outside the SHOP.

(11) *Premium calculator.* In the SHOP, the premium calculator described in § 155.205(b)(6) must facilitate the comparison of available QHPs after the application of any applicable employer contribution in lieu of any advance payment of the premium tax credit and any cost sharing reductions.

(i) To determine the employer and employee contributions, a SHOP may establish one or more standard methods that employers may use to define their contributions toward employee and dependent coverage.

(ii) A Federally-facilitated SHOP must use the following method for employer contributions:

(A) The employer will select a level of coverage as described in paragraph (b)(2) and (b)(3) of this section.

(B) The employer will select a QHP within that level of coverage to serve as a reference plan on which contributions will be based.

(C) The employer will define a percentage contribution toward premiums for employee-only coverage under the reference plan and, if dependent coverage is offered, a percentage contribution toward premiums for dependent coverage under the reference plan.

(D) Either State law or the employer may require that a Federally-facilitated SHOP base contributions on a calculated composite premium for the reference plan for employees, for adult dependents, and for dependents below age 21.

(E) The resulting contribution amounts for each employee's coverage may then be applied toward the QHP selected by the employee.

■ 35. Section 155.1030 is added to read as follows:

§ 155.1030 QHP certification standards related to advance payments of the premium tax credit and cost-sharing reductions.

(a) *Review of plan variations for cost-sharing reductions.* (1) An Exchange must ensure that each issuer that offers, or intends to offer a health plan at any level of coverage in the individual market on the Exchange submits the required plan variations for the health plan as described in § 156.420 of this subchapter. The Exchange must certify that the plan variations meet the requirements of § 156.420.

(2) The Exchange must provide to HHS the actuarial values of each QHP and silver plan variation, calculated under § 156.135 of this subchapter, in the manner and timeframe established by HHS.

(b) *Information for administering advance payments of the premium tax credit and advance payments of cost-sharing reductions.* (1) The Exchange must collect and review annually the rate allocation, the expected allowed claims cost allocation, and the actuarial memorandum that an issuer submits to the Exchange under § 156.470 of this subchapter, to ensure that such allocations meet the standards set forth in § 156.470(c) and (d).

(2) The Exchange must submit, in the manner and timeframe established by HHS, to HHS the approved allocations and actuarial memorandum underlying the approved allocations for each health plan at any level of coverage or stand-alone dental plan offered, or intended to be offered in the individual market on the Exchange.

(3) The Exchange must collect annually any estimates and supporting documentation that a QHP issuer submits to receive advance payments of certain cost-sharing reductions, under § 156.430(a) of this subchapter, and submit, in the manner and timeframe established by HHS, the estimates and supporting documentation to HHS for review.

(4) HHS may use the information provided to HHS by the Exchange under this section for the approval of the estimates that an issuer submits for advance payments of cost-sharing reductions, as described in § 156.430 of this subchapter, and the oversight of the advance payments of cost-sharing reductions and premium tax credits programs.

(c) *Multi-State plans.* The U.S. Office of Personnel Management will ensure

compliance with the standards referenced in this section for multi-State plans, as defined in § 155.1000(a).

PART 156—HEALTH INSURANCE ISSUER STANDARDS UNDER THE AFFORDABLE CARE ACT, INCLUDING STANDARDS RELATED TO EXCHANGES

■ 36. The authority citation for part 156 is revised to read as follows:

Authority: Title I of the Affordable Care Act, sections 1301–1304, 1311–1312, 1321–1322, 1324, 1334, 1342–1343, 1401–1402, and 1412, Pub. L. 111–148, 124 Stat. 119 (42 U.S.C. 18021–18024, 18031–18032, 18041–18042, 18044, 18054, 18061, 18063, 18071, 18082, 26 U.S.C. 36B, and 31 U.S.C. 9701).

■ 37. Section 156.20 is amended by adding definitions for ''Federally-facilitated SHOP'' and ''Issuer group'' in alphabetical order to read as follows:

§ 156.20 Definitions.

* * * * *

Federally-facilitated SHOP has the meaning given to the term in § 155.20 of this subchapter.

* * * * *

Issuer group means all entities treated under subsection (a) or (b) of section 52 of the Internal Revenue Code of 1986 as a member of the same controlled group of corporations as (or under common control with) a health insurance issuer, or issuers affiliated by the common use of a nationally licensed service mark.

* * * * *

■ 38. Section 156.50 is amended by revising paragraph (b) and by adding paragraph (c) to read as follows:

§ 156.50 Financial support.

* * * * *

(b) *Requirement for State-based Exchange user fees.* A participating issuer must remit user fee payments, or any other payments, charges, or fees, if assessed by a State-based Exchange under § 155.160 of this subchapter.

(c) *Requirement for Federally-facilitated Exchange user fee.* To support the functions of Federally-facilitated Exchanges, a participating issuer offering a plan through a Federally-facilitated Exchange must remit a user fee to HHS each month, in the timeframe and manner established by HHS, equal to the product of the monthly user fee rate specified in the annual HHS notice of benefit and payment parameters for the applicable benefit year and the monthly premium charged by the issuer for each policy under the plan where enrollment is through a Federally-facilitated Exchange.

■ 39. Section 156.200 is amended by adding paragraphs (f) and (g) to read as follows:

§ 156.200 QHP issuer participation standards.

* * * * *

(f) *Broker compensation in a Federally-facilitated Exchange.* A QHP issuer must pay the same broker compensation for QHPs offered through a Federally-facilitated Exchange that the QHP issuer pays for similar health plans offered in the State outside a Federally-facilitated Exchange.

(g) *Certification standard specific to a Federally-facilitated Exchange.* A Federally-facilitated Exchange may certify a QHP in the individual market of a Federally-facilitated Exchange only if the QHP issuer meets one of the conditions below:

(1) The QHP issuer also offers through a Federally-facilitated SHOP serving that State at least one small group market QHP at the silver level of coverage and one at the gold level of coverage as described in section 1302(d) of the Affordable Care Act;

(2) The QHP issuer does not offer small group market products in that State, but another issuer in the same issuer group offers through a Federally-facilitated SHOP serving that State at least one small group market QHP at the silver level of coverage and one at the gold level of coverage; or

(3) Neither the issuer nor any other issuer in the same issuer group has a share of the small group market, as determined by HHS, greater than 20 percent, based on the earned premiums submitted by all issuers in the State's small group market, under § 158.110 of this subchapter, on the reporting date immediately preceding the due date of the application for QHP certification.

■ 40. Section 156.215 is added to read as follows:

§ 156.215 Advance payments of the premium tax credit and cost-sharing reduction standards.

(a) *Standards relative to advance payments of the premium tax credit and cost-sharing reductions.* In order for a health plan to be certified as a QHP initially and to maintain certification to be offered in the individual market on the Exchange, the issuer must meet the requirements related to the administration of cost-sharing reductions and advance payments of the premium tax credit set forth in subpart E of this part.

(b) [Reserved]

■ 41. Section 156.285 is amended by adding paragraph (c)(7) to read as follows:

§ 156.285 Additional standards specific to SHOP.

* * * * *

(c) * * *

(7) A QHP issuer must enroll a qualified employee only if the SHOP —

(i) Notifies the QHP issuer that the employee is a qualified employee; and

(ii) Transmits information to the QHP issuer as provided in § 155.400(a) of this subchapter.

* * * * *

■ 42. Subpart E is added to read as follows:

Subpart E—Health Insurance Issuer Responsibilities With Respect to Advance Payments of the Premium Tax Credit and Cost-Sharing Reductions

Sec.
156.400 Definitions.
156.410 Cost-sharing reductions for enrollees.
156.420 Plan variations.
156.425 Changes in eligibility for cost-sharing reductions.
156.430 Payment for cost-sharing reductions.
156.440 Plans eligible for advance payments of the premium tax credit and cost-sharing reductions.
156.460 Reduction of enrollee's share of premium to account for advance payments of the premium tax credit.
156.470 Allocation of rates and claims costs for advance payments of cost-sharing reductions and the premium tax credit.

Subpart E—Health Insurance Issuer Responsibilities With Respect to Advance Payments of the Premium Tax Credit and Cost-Sharing Reductions

§ 156.400 Definitions.

The following definitions apply to this subpart:

Advance payments of the premium tax credit has the meaning given to the term in § 155.20 of this subchapter.

Affordable Care Act has the meaning given to the term in § 155.20 of this subchapter.

Annual limitation on cost sharing means the annual dollar limit on cost sharing required to be paid by an enrollee that is established by a particular qualified health plan.

De minimis variation means the allowable variation in the AV of a health plan that does not result in a material difference in the true dollar value of the health plan as established in § 156.140(c).

De minimis variation for a silver plan variation means a single percentage point.

Federal poverty level or *FPL* has the meaning given to the term in § 155.300(a) of this subchapter.

Indian has the meaning given to the term in § 155.300(a) of this subchapter.

Limited cost sharing plan variation means, with respect to a QHP at any level of coverage, the variation of such QHP described in § 156.420(b)(2).

Maximum annual limitation on cost sharing means the highest annual dollar amount that qualified health plans (other than QHPs with cost-sharing reductions) may require in cost sharing for a particular year, as established for that year under § 156.130.

Most generous or *more generous* means, between a QHP (including a standard silver plan) or plan variation, and one or more other plan variations of the same QHP, the QHP or plan variation designed for the category of individuals last listed in § 155.305(g)(3) of this subchapter.

Plan variation means a zero cost sharing plan variation, a limited cost sharing plan variation, or a silver plan variation.

Reduced maximum annual limitation on cost sharing means the dollar value of the maximum annual limitation on cost sharing for a silver plan variation that remains after applying the reduction, if any, in the maximum annual limitation on cost sharing required by section 1402 of the Affordable Care Act as announced in the annual HHS notice of benefit and payment parameters.

Silver plan variation means, with respect to a standard silver plan, any of the variations of that standard silver plan described in § 156.420(a).

Stand-alone dental plan means a plan offered through an Exchange under § 155.1065 of this subchapter.

Standard plan means a QHP offered at one of the four levels of coverage, defined at § 156.140, with an annual limitation on cost sharing that conforms to the requirements of § 156.130(a). A standard plan at the bronze, silver, gold, or platinum level of coverage is referred to as a standard bronze plan, a standard silver plan, a standard gold plan, and a standard platinum plan, respectively.

Zero cost sharing plan variation means, with respect to a QHP at any level of coverage, the variation of such QHP described in § 156.420(b)(1).

§ 156.410 Cost-sharing reductions for enrollees.

(a) *General requirement.* A QHP issuer must ensure that an individual eligible for cost-sharing reductions, as demonstrated by assignment to a particular plan variation, pays only the cost sharing required of an eligible individual for the applicable covered service under the plan variation. The cost-sharing reduction for which an individual is eligible must be applied when the cost sharing is collected.

(b) *Assignment to applicable plan variation.* If an individual is determined to be eligible to enroll in a QHP in the individual market offered through an Exchange and elects to do so, the QHP issuer must assign the individual under enrollment and eligibility information submitted by the Exchange as follows—

(1) If the individual is determined eligible by the Exchange for cost-sharing reductions under § 155.305(g)(2)(i), (ii), or (iii) of this subchapter (subject to the special rule for family policies set forth in § 155.305(g)(3) of this subchapter) and chooses to enroll in a silver health plan, the QHP issuer must assign the individual to the silver plan variation of the selected silver health plan described in § 156.420(a)(1), (2), or (3), respectively.

(2) If the individual is determined eligible by the Exchange for cost-sharing reductions for Indians with lower household income under § 155.350(a) of this subchapter (subject to the special rule for family policies set forth in § 155.305(g)(3) of this subchapter), and chooses to enroll in a QHP, the QHP issuer must assign the individual to the zero cost sharing plan variation of the selected QHP with all cost sharing eliminated described in § 156.420(b)(1).

(3) If the individual is determined by the Exchange to be eligible for cost-sharing reductions for Indians regardless of household income under § 155.350(b) of this subchapter (subject to the special rule for family policies set forth in § 155.305(g)(3) of this subchapter), and chooses to enroll in a QHP, the QHP issuer must assign the individual to the limited cost sharing plan variation of the selected QHP with the prohibition on cost sharing for benefits received from the Indian Health Service and certain other providers described in § 156.420(b)(2).

(4) If the individual is determined by the Exchange not to be eligible for cost-sharing reductions (including eligibility under the special rule for family policies set forth in § 155.305(g)(3) of this subchapter), and chooses to enroll in a QHP, the QHP issuer must assign the individual to the selected QHP with no cost-sharing reductions.

§ 156.420 Plan variations.

(a) *Submission of silver plan variations.* For each of its silver health plans that an issuer offers, or intends to offer in the individual market on an Exchange, the issuer must submit annually to the Exchange for certification prior to each benefit year the standard silver plan and three variations of the standard silver plan, as follows—

(1) For individuals eligible for cost-sharing reductions under § 155.305(g)(2)(i) of this subchapter, a variation of the standard silver plan with:

(i) An annual limitation on cost sharing no greater than the reduced maximum annual limitation on cost sharing specified in the annual HHS notice of benefit and payment parameters for such individuals, and

(ii) Other cost-sharing reductions such that the AV of the silver plan variation is 94 percent plus or minus the de minimis variation for a silver plan variation;

(2) For individuals eligible for cost-sharing reductions under § 155.305(g)(2)(ii) of this subchapter, a variation of the standard silver plan with:

(i) An annual limitation on cost sharing no greater than the reduced maximum annual limitation on cost sharing specified in the annual HHS notice of benefit and payment parameters for such individuals, and

(ii) Other cost-sharing reductions such that the AV of the silver plan variation is 87 percent plus or minus the de minimis variation for a silver plan variation; and

(3) For individuals eligible for cost-sharing reductions under § 155.305(g)(2)(iii) of this subchapter, a variation of the standard silver plan with:

(i) An annual limitation on cost sharing no greater than the reduced maximum annual limitation on cost sharing specified in the annual HHS notice of benefit and payment parameters for such individuals, and

(ii) Other cost-sharing reductions such that the AV of the silver plan variation is 73 percent plus or minus the de minimis variation for a silver plan variation (subject to § 156.420(h)).

(b) *Submission of zero and limited cost sharing plan variations.* For each of its health plans at any level of coverage that an issuer offers, or intends to offer in the individual market on an Exchange, the issuer must submit to the Exchange for certification the health plan and two variations of the health plan, as follows—

(1) For individuals eligible for cost-sharing reductions under § 155.350(a) of this subchapter, a variation of the health plan with all cost sharing eliminated; and

(2) For individuals eligible for cost-sharing reductions under § 155.350(b) of this subchapter, a variation of the health plan with no cost sharing on any item or service that is an EHB furnished directly by the Indian Health Service, an Indian Tribe, Tribal Organization, or

Urban Indian Organization (each as defined in 25 U.S.C. 1603), or through referral under contract health services.

(c) *Benefit and network equivalence in silver plan variations.* A standard silver plan and each silver plan variation thereof must cover the same benefits and providers, and require the same out-of-pocket spending for benefits other than essential health benefits. Each silver plan variation is subject to all requirements applicable to the standard silver plan (except for the requirement that the plan have an AV as set forth in § 156.140(b)(2)).

(d) *Benefit and network equivalence in zero and limited cost sharing plan variations.* A QHP and each zero cost sharing plan variation or limited cost sharing plan variation thereof must cover the same benefits and providers, and require the same out-of-pocket spending for benefits other than essential health benefits. A limited cost sharing plan variation must have the same cost sharing on items or services not described in paragraph (b)(2) of this section as the QHP with no cost-sharing reductions. Each zero cost sharing plan variation or limited cost sharing plan variation is subject to all requirements applicable to the QHP (except for the requirement that the plan have an AV as set forth in § 156.140(b)).

(e) *Decreasing cost sharing in higher AV silver plan variations.* The cost sharing required of enrollees under any silver plan variation of a standard silver plan for an essential health benefit from a provider (including a provider outside the plan's network) may not exceed the corresponding cost sharing required in the standard silver plan or any other silver plan variation thereof with a lower AV.

(f) *Minimum AV differential between 70 percent and 73 percent silver plan variations.* Notwithstanding any permitted de minimis variation in AV for a health plan or permitted de minimis variation for a silver plan variation, the AVs of a standard silver plan and the silver plan variation thereof described in paragraph (a)(3) of this section must differ by at least 2 percentage points.

(g) *Multi-state plans.* The U.S. Office of Personnel Management will determine the time and manner for multi-State plans, as defined in § 155.1000(a) of this subchapter, to submit silver plan variations, zero cost sharing plan variations, and limited cost sharing plan variations.

§ 156.425 Changes in eligibility for cost-sharing reductions.

(a) *Effective date of change in assignment.* If the Exchange notifies a QHP issuer of a change in an enrollee's eligibility for cost-sharing reductions (including a change in the individual's eligibility under the special rule for family policies set forth in § 155.305(g)(3) of this subchapter due to a change in eligibility of another individual on the same policy), then the QHP issuer must change the individual's assignment such that the individual is assigned to the applicable standard plan or plan variation of the QHP as required under § 156.410(b) as of the effective date of eligibility required by the Exchange.

(b) *Continuity of deductible and out-of-pocket amounts.* In the case of a change in assignment to a different plan variation (or standard plan without cost-sharing reductions) of the same QHP in the course of a benefit year under this section, the QHP issuer must ensure that any cost sharing paid by the applicable individual under previous plan variations (or standard plan without cost-sharing reductions) for that benefit year is taken into account in the new plan variation (or standard plan without cost-sharing reductions) for purposes of calculating cost sharing based on aggregate spending by the individual, such as for deductibles or for the annual limitations on cost sharing.

§ 156.430 Payment for cost-sharing reductions.

(a) *Estimates of value of cost-sharing reductions for purposes of advance payments.* (1) For each health plan that an issuer offers, or intends to offer, in the individual market on an Exchange as a QHP, the issuer must provide to the Exchange annually prior to the benefit year, for approval by HHS, an estimate of the dollar value of the cost-sharing reductions to be provided over the benefit year. The estimate must:

(i) If the QHP is a silver health plan, identify separately the per member per month dollar value of the cost-sharing reductions to be provided under each silver plan variation identified in § 156.420(a)(1), (2), and (3);

(ii) Regardless of the level of coverage of the QHP, identify the per member per month dollar value of the cost-sharing reductions to be provided under the zero cost sharing plan variation;

(iii) Be accompanied by supporting documentation validating the estimate; and

(iv) Be developed using the methodology specified by HHS in the applicable annual HHS notice of benefit and payment parameters.

(2) If an issuer seeks advance payments for the cost-sharing reductions to be provided under the limited cost sharing plan variation of a health plan it offers, or intends to offer, in the individual market on the Exchange as a QHP at any level of coverage, the issuer must provide to the Exchange annually prior to the benefit year, for approval by HHS, an estimate of the per member per month dollar value of the cost-sharing reductions to be provided over the benefit year under such limited cost sharing plan variation. The estimate must:

(i) Be accompanied by supporting documentation validating the estimate; and

(ii) Be developed using the methodology specified by HHS in the annual HHS notice of benefit and payment parameters.

(3) HHS's approval of the estimate will be based on whether the estimate is made consistent with the methodology specified by HHS in the annual HHS notice of benefit and payment parameters.

(4) Issuers of multi-State plans, as defined in § 155.1000(a) of this subchapter, must provide the estimates described in paragraphs (a)(1) and (2) of this section to the U.S. Office of Personnel Management, in the time and manner established by the U.S. Office of Personnel Management.

(b) *Advance payments for cost-sharing reductions.* (1) A QHP issuer will receive periodic advance payments based on the approved advance estimates provided under paragraph (a) of this section and the actual enrollment in the applicable plan variation.

(2) HHS may adjust the advance payment amount for a particular QHP during the benefit year if the QHP issuer provides evidence, certified by a member of the American Academy of Actuaries in accordance with generally accepted actuarial principles and methodologies, that the advance payments for a particular QHP are likely to be substantially different than the cost-sharing reduction amounts that the QHP provides that will be reimbursed by HHS.

(c) *Submission of actual amounts.* (1) *General.* For each plan variation that a QHP issuer offers on the Exchange, it must submit to HHS, in the manner and timeframe established by HHS, for each policy, the total allowed costs for essential health benefits charged for the policy for the benefit year, broken down by all of the following:

(i) The amount the issuer paid.

(ii) The amount the enrollee(s) paid.

(iii) The amount the enrollee(s) would have paid under the standard plan without cost-sharing reductions.

(2) *Standard methodology.* A QHP issuer must calculate the value of the amount the enrollee(s) would have paid

under the standard plan without cost-sharing reductions by applying the actual cost-sharing requirements for the standard plan to the allowed costs for essential health benefits under the enrollee's policy for the benefit year.

(3) [Reserved]

(4) [Reserved]

(5) *Reimbursement of providers.* In the case of a benefit for which the QHP issuer compensates an applicable provider in whole or in part on a fee-for-service basis, allowed costs associated with the benefit may be included in the calculation of the amount that an enrollee(s) would have paid under the standard plan without cost-sharing reductions only to the extent the amount was either payable by the enrollee(s) as cost sharing under the plan variation or was reimbursed to the provider by the QHP issuer.

(d) *Reconciliation of amounts.* HHS will perform periodic reconciliations of any advance payments of cost-sharing reductions provided to a QHP issuer under paragraph (b) of this section against—

(1) The actual amount of cost-sharing reductions provided to enrollees and reimbursed to providers by the QHP issuer for benefits for which the QHP issuer compensates the applicable providers in whole or in part on a fee-for-service basis; and

(2) The actual amount of cost-sharing reductions provided to enrollees for benefits for which the QHP issuer compensates the applicable providers in any other manner.

(e) *Payment of discrepancies.* If the actual amounts of cost-sharing reductions described in paragraphs (d)(1) and (2) of this section are—

(1) More than the amount of advance payments provided and the QHP issuer has timely provided the actual amounts of cost-sharing reductions as required under paragraph (c) of this section, HHS will reimburse the QHP issuer for the difference; and

(2) Less than the amount of advance payments provided, the QHP issuer must repay the difference to HHS in the manner and timeframe specified by HHS.

(f) *Cost-sharing reductions during special periods.* (1) Notwithstanding the cost-sharing reduction reconciliation process described in paragraphs (c) through (e) of this section, a QHP issuer will not be eligible for reimbursement of any cost-sharing reductions provided following a termination of coverage effective date with respect to a grace period as described in § 155.430(b)(2)(ii)(A) or (B) of this subchapter. However, the QHP issuer will be eligible for reimbursement of cost-sharing reductions provided prior to the termination of coverage effective date. Advance payments of cost-sharing reductions will be paid to a QHP issuer prior to a determination of termination (including during any grace period, but the QHP issuer will be required to repay any advance payments made with respect to any month after any termination of coverage effective date during a grace period).

(2) Notwithstanding the cost-sharing reduction reconciliation process described in paragraphs (c) through (e) of this section, if the termination of coverage effective date is prior to the determination of termination other than in the circumstances described in paragraph (f)(1) of this section, and if the termination (or the late determination thereof) is the fault of the QHP issuer, as reasonably determined by the Exchange, the QHP issuer will not be eligible for advance payments and reimbursement for cost-sharing reductions provided during the period following the termination of coverage effective date and prior to the determination of the termination.

(3) Subject to the requirements of the cost-sharing reduction reconciliation process described in paragraphs (c) through (e) of this section, if the termination of coverage effective date is prior to the determination of termination other than in the circumstances described in paragraph (f)(1) of this section, and if the reason for the termination (or late determination thereof) is not the fault of the QHP issuer, as reasonably determined by the Exchange, the QHP issuer will be eligible for advance payments and reimbursement for cost-sharing reductions provided during such period.

(4) Subject to the requirements of the cost-sharing reduction reconciliation process described in paragraphs (c) through (e) of this section, a QHP issuer will be eligible for advance payments and reimbursement for cost-sharing reductions provided during any period of coverage pending resolution of inconsistencies in information required to determine eligibility for enrollment under § 155.315(f) of this subchapter.

(g) *Prohibition on reduction in payments to Indian health providers.* If an Indian is enrolled in a QHP in the individual market through an Exchange and is furnished an item or service directly by the Indian Health Service, an Indian Tribe, Tribal Organization, or Urban Indian Organization, or through referral under contract health services, the QHP issuer may not reduce the payment to any such entity for such item or service by the amount of any cost sharing that would be due from the Indian but for the prohibitions on cost sharing set forth in § 156.410(b)(2) and (3).

§ 156.440 Plans eligible for advance payments of the premium tax credit and cost-sharing reductions.

Except as noted in paragraph (a) through (c) of this section, the provisions of this subpart apply to qualified health plans offered in the individual market on the Exchange.

(a) *Catastrophic plans.* The provisions of this subpart do not apply to catastrophic plans described in § 156.155.

(b) *Stand-alone dental plans.* The provisions of this subpart, to the extent relating to cost-sharing reductions, do not apply to stand-alone dental plans. The provisions of this subpart, to the extent relating to advance payments of the premium tax credit, apply to stand-alone dental plans.

(c) *Child-only plans.* The provisions of this subpart apply to child-only QHPs, described in § 156.200(c)(2).

§ 156.460 Reduction of enrollee's share of premium to account for advance payments of the premium tax credit.

(a) *Reduction of enrollee's share of premium to account for advance payments of the premium tax credit.* A QHP issuer that receives notice from the Exchange that an individual enrolled in the issuer's QHP is eligible for an advance payment of the premium tax credit must—

(1) Reduce the portion of the premium charged to or for the individual for the applicable month(s) by the amount of the advance payment of the premium tax credit;

(2) Notify the Exchange of the reduction in the portion of the premium charged to the individual in accordance with § 156.265(g); and

(3) Include with each billing statement, as applicable, to or for the individual the amount of the advance payment of the premium tax credit for the applicable month(s), and the remaining premium owed.

(b) *Delays in payment.* A QHP issuer may not refuse to commence coverage under a policy or terminate coverage on account of any delay in payment of an advance payment of the premium tax credit on behalf of an enrollee if the QHP issuer has been notified by the Exchange under § 155.340(a) of this subchapter that the QHP issuer will receive such advance payment.

§ 156.470 Allocation of rates and claims costs for advance payments of cost-sharing reductions and the premium tax credit.

(a) *Allocation to additional health benefits for QHPs.* An issuer must provide to the Exchange annually for approval, in the manner and timeframe established by HHS, for each health plan at any level of coverage offered, or intended to be offered, in the individual market on an Exchange, an allocation of the rate and the expected allowed claims costs for the plan, in each case, to:

(1) EHB, other than services described in § 156.280(d)(1), and

(2) Any other services or benefits offered by the health plan not described paragraph (a)(1) of this section.

(b) *Allocation to additional health benefits for stand-alone dental plans.* An issuer must provide to the Exchange annually for approval, in the manner and timeframe established by HHS, for each stand-alone dental plan offered, or intended to be offered, in the individual market on the Exchange, a dollar allocation of the expected premium for the plan, to:

(1) The pediatric dental essential health benefit, and

(2) Any benefits offered by the stand-alone dental plan that are not the pediatric dental essential health benefit.

(c) *Allocation standards for QHPs.* The issuer must ensure that the allocation described in paragraph (a) of this section—

(1) Is performed by a member of the American Academy of Actuaries in accordance with generally accepted actuarial principles and methodologies;

(2) Reasonably reflects the allocation of the expected allowed claims costs attributable to EHB (excluding those services described in § 156.280(d)(1));

(3) Is consistent with the allocation applicable to State-required benefits to be submitted by the issuer under § 155.170(c) of this subchapter, and the allocation requirements described in § 156.280(e)(4) for certain services; and

(4) Is calculated under the fair health insurance premium standards described at 45 CFR 147.102, the single risk pool standards described at 45 CFR 156.80, and the same premium rate standards described at 45 CFR 156.255.

(d) *Allocation standards for stand-alone dental plans.* The issuer must ensure that the dollar allocation described in paragraph (b) of this section is performed by a member of the American Academy of Actuaries in accordance with generally accepted actuarial principles and methodologies.

(e) *Disclosure of attribution and allocation methods.* An issuer of a health plan at any level of coverage or a stand-alone dental plan offered, or intended to be offered, in the individual market on the Exchange must submit to the Exchange annually for approval, an actuarial memorandum, in the manner and timeframe specified by HHS, with a detailed description of the methods and specific bases used to perform the allocations set forth in paragraphs (a) and (b), and demonstrating that the allocations meet the standards set forth in paragraphs (c) and (d) of this section, respectively.

(f) *Multi-State plans.* Issuers of multi-State plans, as defined in § 155.1000(a) of this subchapter, must submit the allocations and actuarial memorandum described in this section to the U.S. Office of Personnel Management, in the time and manner established by the U.S. Office of Personnel Management.

PART 157—EMPLOYER INTERACTIONS WITH EXCHANGES AND SHOP PARTICIPATION

■ 43. The authority citation for part 157 continues to read as follows:

Authority: Title I of the Affordable Care Act, sections 1311, 1312, 1321, 1411, 1412, Pub. L. 111–148, 124 Stat. 199.

■ 44. Section 157.20 is amended by adding the definitions for ''Federally-facilitated SHOP,'' ''Full-time employee,'' and ''Large employer'' in alphabetical order to read as follows:

§ 157.20 Definitions.

* * * * *

Federally-facilitated SHOP has the meaning given to the term in § 155.20 of this subchapter.

Full-time employee has the meaning given to the term in § 155.20 of this subchapter.

Large employer has the meaning given to the term in § 155.20 of this subchapter.

* * * * *

PART 158—ISSUER USE OF PREMIUM REVENUE: REPORTING AND REBATE REQUIREMENTS

■ 45. The authority citation for part 158 continues to read as follows:

Authority: Section 2718 of the Public Health Service Act (*42 U.S.C. 300gg–18*), as amended.

■ 46. Section 158.110 is amended by revising paragraph (b) to read as follows:

§ 158.110 Reporting requirements related to premiums and expenditures.

* * * * *

(b) *Timing and form of report.* The report for each of the 2011, 2012, and 2013 MLR reporting years must be submitted to the Secretary by June 1 of the year following the end of an MLR reporting year, on a form and in the manner prescribed by the Secretary. Beginning with the 2014 MLR reporting year, the report for each MLR reporting year must be submitted to the Secretary by July 31 of the year following the end of an MLR reporting year, on a form and in the manner prescribed by the Secretary.

* * * * *

■ 47. Section 158.130 is amended by adding paragraph (b)(5) to read as follows:

§ 158.130 Premium revenue.

* * * * *

(b) * * *

(5) Account for the net payments or receipts related to risk adjustment, risk corridors, and reinsurance programs under sections 1341, 1342, and 1343 of the Patient Protection and Affordable Care Act, 42 U.S.C. 18061, 18062, 18063.

■ 48. Section 158.140 is amended by adding paragraph (b)(4)(ii) and revising paragraph (b)(5)(i) to read as follows:

§ 158.140 Requirements for clinical services provided to enrollees.

* * * * *

(b) * * *

(4) * * *

(ii) Receipts related to the transitional reinsurance program and net payments or receipts related to risk adjustment and risk corridors programs under sections 1341, 1342, and 1343 of the Patient Protection and Affordable Care Act, 42 U.S.C. 18061, 18062, 18063.

(5) * * *

(i) Affiliated issuers that offer group coverage at a blended rate may choose whether to make an adjustment to each affiliate's incurred claims and activities to improve health care quality, to reflect the experience of the issuer with respect to the employer as a whole, according to an objective formula that must be defined by the issuer prior to January 1 of the MLR reporting year, so as to result in each affiliate having the same ratio of incurred claims to earned premium for that employer group for the MLR reporting year as the ratio of incurred claims to earned premium calculated for the employer group in the aggregate.

* * * * *

■ 49. Section 158.161 is amended by revising paragraph (a) to read as follows:

§ 158.161 Reporting of Federal and State licensing and regulatory fees.

(a) *Licensing and regulatory fees included.* The report required in § 158.110 must include statutory

assessments to defray operating expenses of any State or Federal department, transitional reinsurance contributions assessed under section 1341 of the Patient Protection and Affordable Care Act, 42 U.S.C. 18061, and examination fees in lieu of premium taxes as specified by State law.

* * * * *

■ 50. Section 158.162 is amended by revising paragraph (b)(1)(vii) and adding paragraph (b)(1)(viii) to read as follows:

§ 158.162 Reporting of Federal and State taxes.

* * * * *

(b) * * *

(1) * * *

(vii) Payments made by a Federal income tax exempt issuer for community benefit expenditures as defined in paragraph (c) of this section, limited to the highest of either:

(A) Three percent of earned premium; or

(B) The highest premium tax rate in the State for which the report is being submitted, multiplied by the issuer's earned premium in the applicable State market.

(viii) In lieu of reporting amounts described in paragraph (b)(1)(vi) of this section, an issuer that is not exempt from Federal income tax may choose to report payment for community benefit expenditures as described in paragraph (c) of this section, limited to the highest premium tax rate in the State for which the report is being submitted multiplied by the issuer's earned premium in the applicable State market.

* * * * *

■ 51. Section 158.221 is amended by revising paragraph (c) to read as follows:

§ 158.221 Formula for calculating an issuer's medical loss ratio.

* * * * *

(c) *Denominator.* The denominator of an issuer's MLR must equal the issuer's premium revenue, as defined in § 158.130, excluding the issuer's Federal and State taxes and licensing and regulatory fees, described in §§ 158.161(a) and 158.162(a)(1) and (b)(1), and after accounting for payments or receipts related to risk adjustment, risk corridors, and reinsurance, described in § 158.130(b)(5).

■ 52. Section 158.232 is amended by revising paragraph (c)(1)(i) and paragraph (d) introductory text to read as follows:

§ 158.232 Calculating the credibility adjustment.

* * * * *

(c) * * *

(1) * * *

(i) The per person deductible for a policy that covers a subscriber and the subscriber's dependents shall be the lesser of: the deductible applicable to each of the individual family members; or the overall family deductible for the subscriber and subscriber's family divided by two (regardless of the total number of individuals covered through the subscriber).

* * * * *

(d) *No credibility adjustment.* Beginning with the 2013 MLR reporting year, the credibility adjustment for and MLR based on partially credible experience is zero if both of the following conditions are met:

* * * * *

■ 53. Section 158.240 is amended by revising paragraphs (c) and (d) to read as follows:

§ 158.240 Rebating premium if the applicable medical loss ratio standard is not met.

* * * * *

(c) *Amount of rebate to each enrollee.* (1) For each MLR reporting year, an issuer must rebate to the enrollee the total amount of premium revenue, as defined in § 158.130, received by the issuer from the enrollee, after subtracting Federal and State taxes and licensing and regulatory fees as provided in §§ 158.161(a) and 158.162(a)(1) and (b)(1), and after accounting for payments or receipts for risk adjustment, risk corridors, and reinsurance as provided in § 158.130(b)(5), multiplied by the difference between the MLR required by § 158.210 or § 158.211, and the issuer's MLR as calculated under § 158.221.

(2) For example, an issuer must rebate a pro rata portion of premium revenue if it does not meet an 80 percent MLR for the individual market in a State that has not set a higher MLR. If an issuer has a 75 percent MLR for the coverage it offers in the individual market in a State that has not set a higher MLR, the issuer must rebate 5 percent of the premium paid by or on behalf of the enrollee for the MLR reporting year after subtracting a pro rata portion of taxes and fees and accounting for payments or receipts related to reinsurance, risk adjustment and risk corridors. If the issuer's total earned premium for the MLR reporting year in the individual market in the State is $200,000, the issuer received transitional reinsurance payments of $2,500, and made net payments related to risk adjustment and risk corridors of $20,000, the issuer's gross earned premium in the individual market in the State would be $200,000 plus $2,500 minus $20,000, for a total of $182,500. If the issuer's Federal and State taxes and licensing and regulatory fees, including reinsurance contributions, that may be excluded from premium revenue as described in §§ 158.161(a), 158.162(a)(1) and 158.162(b)(1), allocated to the individual market in the State are $15,000, and the net payments related to risk adjustment and risk corridors, reduced by reinsurance receipts, that must be accounted for in premium revenue as described in §§ 158.130(b)(5), 158.221 and 158.240, are $17,500 ($20,000 reduced by $2,500), then the issuer would subtract $15,000 and add $17,500 to gross premium revenue of $182,500, for a base of $185,000 in premium. The issuer would owe rebates of 5 percent of $185,000, or $9,250 in the individual market in the State. In this example, if an enrollee of the issuer in the individual market in the State paid $2,000 in premiums for the MLR reporting year, or 1/100 of the issuer's total premium in that State market, then the enrollee would be entitled to 1/100 of the total rebates owed by the issuer, or $92.50.

(d) *Timing of rebate.* For each of the 2011, 2012, and 2013 MLR reporting years, an issuer must provide any rebate owing to an enrollee no later than August 1 following the end of the MLR reporting year. Beginning with the 2014 MLR reporting year, an issuer must provide any rebate owing to an enrollee no later than September 30 following the end of the MLR reporting year.

* * * * *

■ 54. Section 158.241 is amended by revising paragraph (a)(2) to read as follows:

§ 158.241 Form of rebate.

(a) * * *

(2) For each of the 2011, 2012, and 2013 MLR reporting years, any rebate provided in the form of a premium credit must be provided by applying the full amount due to the first month's premium that is due on or after August 1 following the MLR reporting year. If the amount of the rebate exceeds the premium due for August, then any overage shall be applied to succeeding premium payments until the full amount of the rebate has been credited. Beginning with the 2014 MLR reporting year, any rebate provided in the form of a premium credit must be provided by applying the full amount due to the first month's premium that is due on or after September 30 following the MLR reporting year. If the amount of the rebate exceeds the premium due for October, then any overage shall be

applied to succeeding premium payments until the full amount of the rebate has been credited.

* * * * *

Dated: February 25, 2013.

Marilyn Tavenner,

Acting Administrator, Centers for Medicare & Medicaid Services.

Approved: February 27, 2013.

Kathleen Sebelius,

Secretary, Department of Health and Human Services.

[FR Doc. 2013–04902 Filed 3–1–13; 11:15 am]

BILLING CODE 4120–01–P

DEPARTMENT OF HEALTH AND HUMAN SERVICES

45 CFR Parts 153 and 156

[CMS–9964–IFC]

RIN 0938–AR74

Patient Protection and Affordable Care Act; Amendments to the HHS Notice of Benefit and Payment Parameters for 2014

AGENCY: Centers for Medicare & Medicaid Services (CMS), Department of Health and Human Services (HHS).

ACTION: Interim final rule with comment.

SUMMARY: This interim final rule with comment builds upon standards set forth in the HHS Notice of Benefit and Payment Parameters for 2014, published elsewhere in this issue of the **Federal Register**. This document will adjust risk corridors calculations that would align the calculations with the single risk pool provision, and set standards permitting issuers of qualified health plans the option of using an alternate methodology for calculating the value of cost-sharing reductions provided for the purpose of reconciliation of advance payments of cost-sharing reductions.

DATES: *Effective date:* These regulations are effective on April 30, 2013.

Comment date: To be assured consideration, comments must be received at one of the addresses provided below, no later than 5 p.m. on April 30, 2013.

ADDRESSES: In commenting, please refer to file code CMS–9964–IFC. Because of staff and resource limitations, we cannot accept comments by facsimile (FAX) transmission.

You may submit comments in one of four ways (please choose only one of the ways listed)

1. *Electronically.* You may submit electronic comments on this regulation to *http://www.regulations.gov.* Follow the ''Submit a comment'' instructions.

2. *By regular mail.* You may mail written comments to the following address only: Centers for Medicare & Medicaid Services, Department of Health and Human Services, Attention: CMS–9964–IFC, P.O. Box 8016, Baltimore, MD 21244–8016.

Please allow sufficient time for mailed comments to be received before the close of the comment period.

3. *By express or overnight mail.* You may send written comments to the following address only: Centers for Medicare & Medicaid Services, Department of Health and Human Services, Attention: CMS–9964–IFC, Mail Stop C4–26–05, 7500 Security Boulevard, Baltimore, MD 21244–1850.

4. *By hand or courier.* Alternatively, you may deliver (by hand or courier) your written comments only to the following addresses prior to the close of the comment period:

a. For delivery in Washington, DC—

Centers for Medicare & Medicaid Services, Department of Health and Human Services, Room 445–G, Hubert H. Humphrey Building, 200 Independence Avenue SW., Washington, DC 20201.

(Because access to the interior of the Hubert H. Humphrey Building is not readily available to persons without Federal government identification, commenters are encouraged to leave their comments in the CMS drop slots located in the main lobby of the building. A stamp-in clock is available for persons wishing to retain a proof of filing by stamping in and retaining an extra copy of the comments being filed.)

b. For delivery in Baltimore, MD—

Centers for Medicare & Medicaid Services, Department of Health and Human Services, 7500 Security Boulevard, Baltimore, MD 21244–1850.

If you intend to deliver your comments to the Baltimore address, call telephone number (410) 786–7195 in advance to schedule your arrival with one of our staff members.

Comments erroneously mailed to the addresses indicated as appropriate for hand or courier delivery may be delayed and received after the comment period.

For information on viewing public comments, see the beginning of the **SUPPLEMENTARY INFORMATION** section.

FOR FURTHER INFORMATION CONTACT: Sharon Arnold, (301) 492–4286; Laurie McWright, (301) 492–4311; or Jeff Wu, (301) 492–4305, for general information. Jaya Ghildiyal, (301) 492–5149 for matters relating to risk corridors. Johanna Lauer, (301) 492–4397 for matters relating to cost-sharing reductions.

SUPPLEMENTARY INFORMATION: *Inspection of Public Comments:* All comments received before the close of the comment period are available for viewing by the public, including any personally identifiable or confidential business information that is included in a comment. We post all comments received before the close of the comment period on the following Web site as soon as possible after they have been received: *http://www.regulations.gov.* Follow the search instructions on that Web site to view public comments.

Comments received timely will be also available for public inspection as they are received, generally beginning approximately 3 weeks after publication of a document, at the headquarters of the Centers for Medicare & Medicaid Services, 7500 Security Boulevard, Baltimore, Maryland 21244, Monday through Friday of each week from 8:30 a.m. to 4 p.m. To schedule an appointment to view public comments, phone 1–800–743–3951.

Table of Contents

I. Executive Summary
  A. Purpose
  B. Summary of Provisions
  C. Costs and Benefits
II. Background
III. Provisions of the Interim Final Rule
  A. Calculation of Allowable Costs for the Risk Corridors Program
  B. Submission of Actual Amounts of Cost-Sharing Reductions
IV. Waiver of Proposed Rulemaking
V. Collection of Information Requirements
VI. Response to Comments
VII. Regulatory Impact Analysis

I. Executive Summary

A. Purpose

Beginning in 2014, individuals and small businesses will be able to purchase private health insurance—qualified health plans—through competitive marketplaces, called Affordable Insurance Exchanges, ''Exchanges,'' or ''Marketplaces.'' Section 1342 of the Affordable Care Act provides for a temporary risk corridors program. The program, which is Federally administered and in effect from 2014 through 2016, is intended to protect against uncertainty in rate setting for qualified health plans (QHPs) by limiting the extent of issuer losses and gains. In the rule entitled ''Standards Related to Reinsurance, Risk Adjustment and Risk Corridors'' (77 FR 17220) (Premium Stabilization Rule), we set forth a regulatory framework for this program. In the HHS Notice of Benefit and Payment Parameters for 2014 (2014 Payment Notice) published elsewhere in this issue of the **Federal Register**, we expanded upon these standards, and stated that we are publishing this

interim final rule with comment. In this interim final rule with comment, we will amend the requirements governing the risk corridors program to better align it with the single risk pool requirement we established in the rule entitled ''Health Insurance Market Reforms; Rate Review,'' which was made available for public inspection at the Office of the Federal Register on February 22, 2013. The Market Reform Rule sets forth standards at § 156.80 to implement section 1312(c) of the Affordable Care Act, which directs an issuer to use a single risk pool for a market (the individual market, small group market, or merged individual and small group market) when developing rates and premiums for coverage effective beginning in 2014. Under the single risk pool provision, an issuer will develop a market-wide index rate (average rate) based on the total combined essential health benefits (EHB) claims experience of all enrollees in all non-grandfathered plans in the market. After setting the index rate, the issuer will make a market-wide adjustment based on the expected aggregated payments and charges under the risk adjustment and reinsurance programs in a State. The premium rate for any given plan may not vary from the resulting adjusted market-wide index rate, except for plan specific adjustments specified under § 156.80. To address a potential incongruity between the current risk corridors calculation methodology and the single risk pool requirement in section 1312(c) of the Affordable Care Act, we are modifying our interpretation of the definition of ''allowable costs'' found in section 1342(c)(1)(A) of the Affordable Care Act and are changing the corresponding regulatory definition accordingly. We are also making certain conforming changes to the risk corridors attribution and allocation rules in § 153.520.

This interim final rule with comment establishes alternate standards for the administration and payment to issuers of the value of cost-sharing reductions provided to eligible individuals. Section 1402 of the Affordable Care Act provides for reductions in cost sharing for certain individuals enrolled in QHPs purchased on the Exchanges, and section 1412(c) of the Affordable Care Act provides for the advance payment of these reductions to issuers. This assistance will help eligible low- and moderate-income qualified individuals and families afford the out-of-pocket spending associated with health care services provided through Exchange-based QHP coverage. The Affordable Care Act directs issuers to reduce cost sharing for EHB for low- and moderate-income individuals who are enrolled in a silver level QHP through an individual market Exchange and are eligible for advance payments of the premium tax credit under Section 36B of the Internal Revenue Code. The statute also directs issuers to eliminate cost sharing for Indians (as defined in Section 4(d) of the Indian Self-Determination and Education Assistance Act) with a household income at or below 300 percent of the Federal poverty level (FPL) who are enrolled in a QHP of any ''metal'' level (that is, bronze, silver, gold, or platinum) through the individual market in the Exchange, and does not allow issuers of QHPs to require cost sharing for Indians, regardless of household income, for items or services furnished directly by the Indian Health Service, an Indian Tribe, a Tribal Organization, or an Urban Indian Organization, or through referral under contract health services.

To implement these cost-sharing reductions, we published a rule entitled ''Establishment of Exchanges and Qualified Health Plans; Exchange Standards for Employers'' (77 FR 18310) (Exchange Establishment Rule), which established eligibility standards for these cost-sharing reductions. We published a bulletin outlining an intended regulatory approach to calculating actuarial value and implementing cost-sharing reductions on February 24, 2012 (the AV/CSR Bulletin).[1] The AV/CSR Bulletin specifically outlined an intended regulatory approach for de minimis variation standards, silver plan variations for individuals eligible for cost-sharing reductions, and advance payments of cost-sharing reductions to issuers, among other topics. The HHS Notice of Benefit and Payment Parameters for 2014 (the 2014 Payment Notice), published concurrently with this interim final rule with comment, establishes standards governing the administration of cost-sharing reductions and provided specific payment parameters for the program. In this interim final rule with comment, we establish an alternate, optional methodology for calculating the value of cost-sharing reductions provided for the purpose of reconciliation of advance payments of cost-sharing reductions.

B. Summary of Provisions

This interim final rule with comment amends the standards established by the Premium Stabilization Rule and the 2014 Payment Notice for the risk corridors and cost-sharing reductions programs.

Risk Corridors: The temporary risk corridors program provides for the Federal government to share a QHP's profits or losses resulting from inaccurate rate setting from 2014 to 2016. In this interim final rule with comment, we are modifying our interpretation of the definition of ''allowable costs'' in section 1342(c)(1)(A) of the Affordable Care Act, as reflected in § 153.500, so that a QHP's allowable costs are determined on the basis of its pro-rata share of a pooled claims cost amount. This approach is consistent with the single risk pool provision established in § 156.80, which directs each issuer to develop its premiums based on its pooled claim experience for all of its non-grandfathered health plans in a market within a State.

Cost-Sharing Reductions: Section 1402(c)(3) of the Affordable Care Act directs a QHP issuer to notify the Secretary of HHS of cost-sharing reductions made under the statute for qualified individuals, and directs the Secretary to make periodic and timely payments to the QHP issuer equal to the value of those reductions. Section 1402(c)(3)(B) of the Affordable Care Act also permits the Secretary to establish a capitated payment system to carry out these payments. Similarly, section 1402(d)(3) of the Affordable Care Act requires the Secretary to pay the QHP issuer an amount necessary to reflect the increase in actuarial value of the plan due to the reduction in cost sharing provided to Indians. Further, section 1412(c)(3) of the Affordable Care Act permits advance payments of cost-sharing reduction amounts to QHP issuers based upon amounts specified by the Secretary.

Under these authorities, the 2014 Payment Notice finalizes a payment approach under which we will make monthly advance payments to QHP issuers to cover projected cost-sharing reduction amounts, and then reconcile those advance payments to the actual cost-sharing reduction amounts provided during the benefit year. In the 2014 Payment Notice, we explained that the reconciliation will happen after the close of the 2014 benefit year. As part of the notice and comment process for the 2014 Payment Notice, we received comments suggesting alternatives for the reconciliation and identifying drawbacks to the use of actual cost-sharing reduction amounts. Those comments led us to finalize here additional subparagraphs in § 156.430(c) to include an alternate methodology for calculating the amounts of cost-sharing

[1] Available at: *http://cciio.cms.gov/resources/files/Files2/02242012/Av-csr-bulletin.pdf.*

reductions provided, against which the advanced payments to QHP issuers will be reconciled. We believe that this alternate methodology will provide QHP issuers with additional flexibility, and reduce the administrative burden for some issuers of participating in the cost-sharing reductions program. Under this regulation, issuers of QHPs will be permitted to choose one of two methodologies for calculating the amount of cost-sharing reductions provided. The first methodology (referred to as the ''standard methodology'') was finalized in the 2014 Payment Notice. Under the standard methodology, QHP issuers calculate the cost sharing that an enrollee would have paid under the standard plan without cost-sharing reductions by applying the cost-sharing requirements for the standard plan to the allowed costs for each policy; in effect, each claim would be processed twice: Using the cost-sharing structure that would have been in place if the individual were not eligible for cost-sharing reductions, and using the reduced cost-sharing structure in the applicable plan variation for which the individual is eligible. Under the second methodology established here (referred to as the ''simplified methodology''), QHP issuers calculate the value of the cost-sharing reductions provided by using a formula based on certain summary cost-sharing parameters of the standard plan, applied to the total allowed costs for each policy.

C. Costs and Benefits

The provisions of this interim final rule with comment, combined with other provisions in the Affordable Care Act and related rules, will make health insurance more affordable and accessible to millions of Americans who currently do not have affordable options available to them. The shortcomings of the individual market today have been widely documented.[2]

We believe that this interim final rule with comment, combined with other provisions of the Affordable Care Act, will improve the functioning of both the individual and the small group markets while stabilizing premiums. The risk corridors program is intended to protect QHP issuers in the individual and small group markets against inaccurate rate setting, and to permit issuers to offer lower rates by not adding a risk premium to account for perceived uncertainties in the 2014 through 2016 markets.

Provisions addressing cost-sharing reductions will help provide for the reduction or elimination of cost sharing for certain individuals enrolled in individual market QHPs offered through the Exchanges. This assistance is expected to help many low- and moderate-income individuals and families, as well as Indians, obtain health care. For many people, cost sharing is a barrier to obtaining needed health care.[3]

II. Background

The Patient Protection and Affordable Care Act (Pub. L. 111–148) was enacted on March 23, 2010. The Health Care and Education Reconciliation Act (Pub. L. 111–152) was enacted on March 30, 2010. We refer to the two statutes collectively as the Affordable Care Act in this interim final rule with comment.

Premium Stabilization: The Premium Stabilization Rule, (77 FR 17220), which implemented the health insurance premium stabilization programs (that is, risk adjustment, reinsurance, and risk corridors), was published in the **Federal Register** on March 23, 2012.

Cost-Sharing Reductions and Actuarial Value: The AV/CSR Bulletin, published on February 24, 2012, outlined an intended regulatory approach for the design of plan variations for individuals eligible for cost-sharing reductions and advance payments and reimbursement of cost-sharing reductions to issuers, among other issues. A notice of proposed rulemaking relating to EHB and actuarial value was published in a November 26, 2012 **Federal Register** proposed rule entitled ''Standards Related to Essential Health Benefits, Actuarial Value, and Accreditation'' (77 FR 70644). The final version of that rule was published by the Office of the Federal Register on February 25, 2013 (78 FR 12834). A notice of proposed rulemaking relating to parameters and provisions governing the risk adjustment, reinsurance, and risk corridors programs; cost-sharing reductions; user fees for Federally-facilitated Exchanges; advance payments of the premium tax credit; and the medical loss ratio program was published in a December 7, 2012 **Federal Register** proposed rule entitled ''HHS Notice of Benefit and Payment Parameters for 2014'' (77 FR 73118). The final version of that rule is published elsewhere in this issue of the **Federal Register**.

Market Reform Rules: A notice of proposed rulemaking relating to market reforms and effective rate review was published in a November 26, 2012 **Federal Register** proposed rule entitled ''Health Insurance Market Reforms; Rate Review'' (78 FR 70584). The final version of that rule was made available for public inspection at the Office of the Federal Register on February 22, 2013.

Tribal Consultations: This interim final rule with comment may be of interest to, and affect, American Indians/Alaska natives. Therefore, we plan to consult with Tribes during the comment period and prior to adopting the final rule.

III. Provisions of the Interim Final Rule

A. Calculation of Allowable Costs for the Risk Corridors Program

The Affordable Care Act established the temporary risk corridors program to help stabilize premiums in the early years of the Exchanges and the market reform rules. The risk corridors program compares a plan's allowable costs (claims costs with certain adjustments) against a plan's target amount (total premiums reduced by administrative costs), and is designed to share the risk of inaccurate rate-setting between QHP issuers and the Federal government. Issuers must establish their premiums based on the single risk pool requirement set forth at § 156.80, which directs each issuer to develop its premiums based on its pooled claim experience for all of its non-grandfathered health plans in a market (that is, the individual market, the small group market, or the merged market) within a State, as adjusted for the pooled amount of net risk adjustment transfers and reinsurance payments it expects. Therefore, under the current risk corridors and single risk pool regulations, risk corridors would compare plan-specific allowable costs based on plan-specific claims costs against a target amount that reflects the issuer's market-wide premiums.

We received a number of comments to our draft 2014 Payment Notice noting the discrepancy. One commenter indicated that the current policy of calculating risk corridors at the plan level was inconsistent with the single

[2] Michelle M. Doty et al., Failure to Protect: Why the Individual Insurance Market Is Not a Viable Option for Most U.S. Families: Findings from the Commonwealth Fund Biennial Health Insurance Survey, 2007, The Commonwealth Fund, July 2009; Sara R. Collins, Invited Testimony: Premium Tax Credits Under The Affordable Care Act: How They Will Help Millions Of Uninsured And Underinsured Americans Gain Affordable, Comprehensive Health Insurance, The Commonwealth Fund, October 27, 2011.

[3] Brook, Robert H., John E. Ware, William H. Rogers, Emmett B. Keeler, Allyson Ross Davies, Cathy D. Sherbourne, George A. Goldberg, Kathleen N. Lohr, Patricia Camp and Joseph P. Newhouse. *The Effect of Coinsurance on the Health of Adults: Results from the RAND Health Insurance Experiment.* Santa Monica, CA: RAND Corporation, 1984. Available at: *http://www.rand.org/pubs/reports/R3055.*

risk pool requirement because, as noted above, it would require a comparison of plan-specific claims costs to market-wide premiums. We agree that a risk corridors calculation based on unpooled claims costs may create an incongruity with the single risk pool requirement that could lessen the premium stabilizing effect of the risk corridors program. We recognize that in the Premium Stabilization Rule (77 FR 17220), in response to a comment similarly recommending that risk corridors be calculated at the issuer level, we stated that the statute did not afford the necessary flexibility. However, in light of the comments we have received on this issue, we have concluded that section 1342 of the Affordable Care Act provides the flexibility to calculate risk corridors payments and charges based on pooled claims and premiums.

We believe the approach to the risk corridors calculation that we describe here is consistent with section 1342(a) of the Affordable Care Act, which requires QHPs to ''participate in a payment adjustment system based on the ratio of the allowable costs of the plan to the plan's aggregate premiums.'' We further believe that we can interpret the statutory definition of ''allowable costs,'' which refers to total costs other than administrative costs ''of the plan'' in providing benefits ''under the plan,'' to mean the plan's proportional share of total claims costs.

As a result of our proposed modification of our interpretation of the statute, we are amending the regulatory definition of allowable costs so that allowable costs for a QHP are equal to the pro rata portion of the QHP issuer's incurred claims (subject to adjustments for any direct or indirect remuneration as described in § 158.40, costs related to improving health care quality set forth in § 158.150, health information technology expenditures set forth in § 158.151, and other applicable adjustments consistent with § 153.530(b)) for all of its non-grandfathered health plans in a market within a State, allocated to the QHP based on premiums earned by the issuer in the applicable market. We are retaining the adjustments and costs described in § 158.40, § 158.150, § 158.151, and § 153.530(b) within the regulatory definition of allowable costs in order to maintain consistency with the MLR formula.

Below, we describe an example of the manner in which we will allocate allowable costs to and among an issuer's QHPs in proportion to the amount of the QHP's premiums. Assume that Issuer I has three plans in the individual market within the State, QHP A and QHP B which are QHPs, and Plan X which is a non-grandfathered health plan. QHP A earns 50 percent of the issuer's premiums in the market, QHP B earns 20 percent, and Plan X earns 30 percent. Assume total allowable costs across all three of I's plans of $10 million. On these facts, $5 million of allowable costs would be allocated to QHP A, $2 million to QHP B, and $3 million to Plan X. The risk corridors calculation would compare those allowable costs to the QHPs' target amounts.

Finally, we are modifying the rule related to attribution and allocation of revenue and expense items in § 153.520 to conform to the changes above for the risk corridors calculation. We are clarifying that these rules, which require that each item of revenue and expense in the risk corridors calculation be reasonably attributable to the operation of the QHP based on a generally accepted accounting method, will apply to the target amount (and therefore allowable administrative expenses), but not to allowable costs. This modification aligns with the approach described above, which requires a QHP issuer to pool allowable costs across all its plans and allocate these costs to each QHP based on the QHP's premiums earned as a share of the premiums earned of all non-grandfathered plans in the relevant market. A number of commenters to the proposed 2014 Payment Notice requested that risk corridors be conducted at the issuer level. We note that under the approach implemented in this interim final rule with comments an issuer may reasonably allocate, in accordance with § 153.520, allowable administrative costs across its business pro rata by premiums earned, leading to an issuer-level risk corridors calculation for its QHP business.

As noted above, we believe the approach to the risk corridors calculation that we describe here is consistent with section 1342(a) of the Affordable Care Act and implements the statutory intent of the risk corridors program. In addition, we believe it is comprehensible to stakeholders, and is administratively straightforward to implement. We seek comments on this approach.

B. Submission of Actual Amounts of Cost-Sharing Reductions

As described in the 2014 Payment Notice, HHS will make monthly advance payments to QHP issuers to cover projected cost-sharing reduction amounts, and then reconcile those advance payments after the end of the benefit year to the cost-sharing reductions provided. This approach is similar to the one employed for the low-income subsidy under Medicare Part D. To implement this payment approach, § 156.430(c) directs QHP issuers to report to HHS the amount of cost-sharing reductions provided during the benefit year. This submission must be made on the timeframe and in the manner identified by HHS. We anticipate collecting this information after the end of the benefit year.

In response to the proposed 2014 Payment Notice, we received a number of comments suggesting that the reporting requirements for QHP issuers under the proposed § 156.430(c) would be operationally challenging, in large part due to the short timeframe for implementation and other information technology challenges facing issuers in 2013 and 2014. Commenters noted that although the reporting and reconciliation process is appropriate for the Medicare Part D Low-Income Subsidy Program, medical benefits are more complex than pharmaceutical benefits and often have a longer time lag between submission and adjudication. Commenters stated that to meet the reporting requirements under proposed § 156.430(c), QHP issuers could need to re-adjudicate each claim for enrollees receiving cost-sharing reductions in order to determine the difference in cost sharing between the applicable plan variation and standard plan. This process could require the development of new information systems in a short period of time.

As an alternative, several commenters suggested that HHS should allow QHP issuers to estimate the value of the cost-sharing reductions provided using a formula similar to that used for the advance payments, but based on the actual claims experience of the enrollees. These calculated amounts could be used as part of cost-sharing reduction reconciliation, lessening the administrative burden on issuers.

Considering those comments, we modified § 156.430(c) in the 2014 Payment Notice, and establish additional standards in this interim final rule with comment to allow QHP issuers greater flexibility in the manner in which cost-sharing reduction amounts are calculated. With this policy, we seek to balance the need to safeguard Federal funds with the goal of lessening the administrative burden on QHP issuers.

Under § 156.430(c)(1) and (2), finalized in the 2014 Payment Notice, a QHP issuer must submit to HHS, for each policy of each plan variation offered on an Exchange, the total allowed costs for EHB charged for the

policy for the benefit year, broken down by: (i) The amount the issuer paid; (ii) the amount the enrollee(s) paid; and (iii) the amount the enrollee(s) would have paid under the standard plan without cost-sharing reductions, which must be calculated using the standard methodology, by applying the actual cost-sharing requirements for the standard plan to the allowed costs for essential health benefits under the enrollee's policy for the benefit year. HHS will use this information to calculate the difference between the amount the enrollee(s) paid and the amount that the enrollee(s) would have paid under the standard plan without cost-sharing reductions, and reconcile this amount against the advance payments provided to the QHP issuer pursuant to § 156.430(a) and (b). We noted in the 2014 Payment Notice, that we anticipate that QHP issuers will submit this information several months after the close of the benefit year. We also clarified that the amount the enrollee paid should include any cost sharing paid by a third party, including a State, on behalf of the enrollee.

In this interim final rule with comment, we build on the standards finalized in the 2014 Payment Notice and add paragraphs (c)(3) and (4). In § 156.430(c)(3), we establish new standards to permit QHP issuers greater flexibility in the manner in which cost-sharing reduction amounts are calculated. We specify that QHP issuers may choose to calculate the amounts that would have been paid under the standard plan without cost-sharing reductions using a simplified methodology, as an alternative to the standard methodology. We anticipate that after an appropriate transition period, all QHP issuers will be required to use the standard methodology. We seek comment on the appropriate length of a transition period permitting the use of the simplified methodology for consideration when we finalize this rule.

In paragraph (3)(i), we provide that the QHP issuer must notify HHS prior to the start of each benefit year whether or not it selects the simplified methodology for the benefit year. We will provide guidance in the future on the manner and timeframe for this submission. In paragraph (3)(ii), we specify that if the QHP issuer selects the simplified methodology, it must apply the simplified methodology to all plan variations it offers on the Exchange for a benefit year. Since the simplified methodology is intended to be used by issuers whose systems are not yet capable of implementing the standard methodology, in paragraph (3)(iii) we specify that the QHP issuer may not select the simplified methodology if it did not select the simplified methodology for the prior benefit year. We also set forth standards for selecting a methodology if a QHP issuer merges with or acquires another issuer of QHPs on the Exchange, or acquires a QHP offered on the Exchange from another issuer. In paragraph (c)(3)(iv), we provide that if each of the affected parties had selected a different methodology for the benefit year, then notwithstanding paragraphs (3)(ii) and (3)(iii), for the benefit year in which the merger or acquisition took place, the QHP issuer must continue to use the methodology selected prior to the start of the benefit year for each plan variation (whether or not the selection was made by that issuer), and for the next benefit year, the QHP issuer may select either methodology subject to the requirement in paragraph (3)(ii) that a QHP issuer select the same methodology for all plan variations it offers on the Exchange for the benefit year. We seek comment on these provisions, and in particular, the administrative implications for QHP issuers.

We believe that the approach described above will allow QHP issuers to choose the methodology that best aligns with their operational practices, which should reduce the administrative burden on issuers in the initial years of the Exchanges and provide additional time for systems implementation. In later years, we will consider alternative approaches for reimbursing QHP issuers. For example, once more data is available, we could change to a capitated payment system as permitted in section 1402(c)(3)(B) of the Affordable Care Act. However, such a change would require access to data on the utilization and cost-sharing patterns of individuals eligible for cost-sharing reductions. We believe that providing a transition period on an interim basis now addresses issuers' operational needs and will permit us to explore a capitated payment approach for future implementation. We will provide QHP issuers with sufficient notice and seek comment prior to proposing any such changes.

In § 156.430(c)(4), we set forth a methodology for calculating the value of the amount that the enrollee(s) would have paid under the standard plan without cost-sharing reductions. We believe this methodology will reduce the administrative burden for certain QHP issuers, yet continue to provide a relatively accurate accounting of the cost-sharing reductions provided. Specifically, § 156.430(c)(4) provides, subject to § 156.430(c)(4)(iv) as described below, that a QHP issuer selecting the simplified methodology will calculates the amount that the enrollee(s) would have paid under the standard plan by applying certain summary, or ''effective,'' cost-sharing parameters for the standard plan—the effective deductible, the effective pre-deductible coinsurance rate, the effective post-deductible coinsurance rate, and the effective claims ceiling—to the total allowed costs paid for EHB under the policy (that is, the policy with cost-sharing reductions) for the benefit year. In § 156.430(c)(4)(i), we detail the process for calculating the amount that the enrollee(s) would have paid under the standard plan under the simplified methodology, depending on the utilization pattern under the policy. We describe these calculations here using Formulas A, B, and C, which build upon each other and use common terms. In § 156.430(c)(4)(ii) we define the effective cost-sharing parameters for the standard plan, which must be calculated separately for both self-only coverage and other than self-only coverage. Below we provide instructions for determining these effective parameters.

Under the simplified methodology, QHP issuers will calculate the amount that the enrollee(s) would have paid under the standard plan for policies with total allowed costs for EHB for the benefit year that are less than or equal to the effective deductible in accordance with paragraph (c)(4)(i)(A), and illustrated below with Formula A. The definitions for all of the terms used in the formula are defined below.

Formula A: $C = TAC_i * PreD$

Where,

C = the amount that the enrollee(s) in a particular policy would have paid under the standard plan without cost-sharing reductions;

TAC_i = the total allowed costs for EHB under the policy with cost-sharing reductions for the benefit year; and

PreD = the effective pre-deductible coinsurance rate.

Secondly, QHP issuers must calculate the amount that the enrollee(s) would have paid under the standard plan for policies with cost-sharing reductions with total allowed costs for EHB for the benefit year that are greater than the effective deductible but less than the effective claims ceiling (that is, the estimated amount of total allowed claims for a policy that results in enrollee cost sharing that meets the annual limitation on cost sharing) in accordance with paragraph (c)(4)(i)(B), and illustrated below with Formula B. The method for calculating the effective claims ceiling is described below.

Formula B: $C = D + ((TAC_i - D) * PostD)$

Where,

D = the effective deductible; and

PostD = the effective post-deductible coinsurance rate.

Lastly, QHP issuers must calculate the amount that the enrollee(s) would have paid under the standard plan for policies with cost-sharing reductions with total allowed costs for EHB for the benefit year that are greater than the effective claims ceiling in accordance with paragraph (c)(4)(i)(C), and illustrated below with Formula C.

Formula C: $C = D + ((EC - D) * PostD)$

Where,

EC = the effective claims ceiling.

We request comment on these formulas for calculating the amount that the enrollee(s) would have paid under the standard plan, and whether this methodology appropriately divides policies based on utilization patterns. We welcome suggestions for alternative methodologies, which may provide a more accurate approach to estimating the amount that the enrollee(s) would have paid under the standard plan, while balancing the administrative burden on QHP issuers.

In § 156.430(c)(4)(ii), we set forth instructions for determining the effective cost-sharing parameters for the standard plan. These parameters are similar to the actual cost-sharing requirements for the standard plan, but are simplified and adjusted based on the utilization of the enrollees in the standard plan. This adjustment allows QHP issuers to calculate enrollee liability under the standard plan in a simple, standardized format. We also specify that QHP issuers must develop separate effective cost-sharing parameters for self-only coverage and other than self-only coverage, though we group together coverage for different size families under the category ''other than self-only coverage.'' However, we seek comment on whether utilization patterns differ for self-only coverage and other than self-only coverage such that separate effective cost-sharing parameters would yield more accurate calculations, and whether different family sizes should also be analyzed separately. We also note that if a QHP issuer has entirely separate cost-sharing parameters for pharmaceutical and medical services, the QHP issuer may elect to develop separate sets of effective cost-sharing parameters for pharmaceutical and medical services.

Effective Deductible: In § 156.430(c)(4)(ii)(A), we provide instructions for determining the effective deductible for the standard plan. If the standard plan has no deductible (and only copays or coinsurance), the effective deductible is zero. If the standard plan has only one deductible, the effective deductible is that deductible. If the standard plan has more than one deductible (for example, one deductible for certain or all in-network services, and another deductible for certain or all out-of-network services), the effective deductible is the weighted average deductible, weighted by allowed claims for EHB for either self-only or other than self-only coverage, as appropriate, under the plan for the benefit year that fall within each deductible category. For example, if a standard plan has a $500 deductible for certain in-network services and a $1,000 deductible for certain out-of-network services, and 65 percent of allowed costs under the standard plan were for the certain in-network services subject to the in-network deductible and 30 percent were for the certain out-of-network services subject to the out-of-network deductible, the weighted average deductible would be equal to approximately $658 (that is, (0.65*500+0.3*1000)/0.95).

We note that services that are not subject to any deductible (including services subject to copays or coinsurance but not subject to the deductible) should not be incorporated into the weighted average calculation of the effective deductible. The estimated cost sharing liability for such services is captured in the effective pre-deductible coinsurance rate, discussed below. Similarly, services that are subject to the deductible only to a limited extent, for example a service for which the first three instances are subject to a copay instead of the deductible, but for which the fourth and each instance thereafter are subject to the deductible, should be incorporated into the weighted average calculation of the effective deductible to the extent the service is subject to the deductible (that is, the fourth and each later instance should be so incorporated), and should be incorporated into the calculation of the pre-deductible coinsurance rate (as calculated as described below) to the extent the service is not (that is, the first three instances should be so incorporated).

Effective Pre-Deductible Coinsurance Rate: In § 156.430(c)(4)(ii)(B), we provide instructions for determining the effective pre-deductible coinsurance rate for the standard plan. We specify that the effective pre-deductible coinsurance rate must be calculated using the cost data from those standard plan policies that have total allowed costs for EHB for the benefit year that are less than or equal to the effective deductible. The effective pre-deductible coinsurance rate would be calculated as the proportion of the total allowed costs for EHB under the standard plan for the benefit year incurred for those standard plan enrollees and payable as cost sharing (including as copays or coinsurance on services with such cost sharing but not subject to the deductible, as discussed above). The effective pre-deductible coinsurance rate for the standard plan without cost-sharing reductions must be calculated separately for both self-only coverage and other than self-only coverage. We note that although the pre-deductible coinsurance rate may be high, it will likely not be 100 percent as certain services, including those preventative services described in § 147.130, will have no cost-sharing requirements. The higher the utilization is for these services, the lower the effective pre-deductible coinsurance rate.

Effective Post-Deductible Coinsurance Rate: In § 156.430(c)(4)(ii)(C), we provide instructions for determining the effective post-deductible coinsurance rate for the standard plan. We specify that the effective post-deductible coinsurance rate must be calculated using the cost data from those standard plan policies that have total allowed costs for EHB for the benefit year that are above the effective deductible, but for which associated cost sharing is less than the annual limitation on cost sharing. The effective post-deductible coinsurance rate for the standard plan without cost-sharing reductions must be calculated separately for both self-only coverage and other than self-only coverage. The effective post-deductible coinsurance rate will then be calculated using the following formula:

$PostD = (CS_p)/(TAC_p - D)$

Where,

PostD = the effective post-deductible coinsurance rate;

CS_p = the average allowed costs for EHB for the benefit year incurred for those enrollee(s) on the policies and payable as cost sharing other than through a deductible (for example, coinsurance and copayments on services not subject to a deductible or for services after the applicable deductible has been met);

D = the effective deductible; and

TAC_p = the average total allowed costs for EHB for the policies of the standard plan for the benefit year (we distinguish TAC_p from the TAC_i; TAC_p refers to the average of total allowed costs for EHB for all the policies in the population that is part of the calculation—which in this case, are the standard plan policies with total allowed costs for EHB for the benefit year that are above the effective deductible, but for which associated cost

sharing is less than the annual limitation on cost sharing—while TAC_i refers to the total allowed costs for EHB for a particular policy).

For example, a standard plan has one deductible of $1,000, and therefore, an effective deductible of $1,000. The average total allowed costs for EHB for the policies included in this calculation (that is, standard plan policies, for either self-only or other than self-only coverage, as appropriate, with total allowed costs for EHB for the benefit year that are above the effective deductible but for which associated cost sharing is less than the annual limitation on cost sharing) is $2,000, and the average total allowed cost payable by the enrollees as cost sharing other than through a deductible is $290. Therefore, the effective post-deductible coinsurance rate is equal to approximately 29 percent (that is, (290)/(2,000 − 1,000)).

Effective Claims Ceiling: In § 156.430(c)(4)(ii)(D), we provide instructions for determining the effective claims ceiling for the standard plan (that is, the estimated amount of total allowed claims for a policy that results in enrollee cost sharing that meets the annual limitation on cost sharing). We specify that the effective claims ceiling is to be calculated using the following formula:

$$EC = D + ((AL - D)/PostD)$$

Where,

EC = the effective claims ceiling;
AL = the standard plan's annual limitation on cost sharing;
PostD = the effective post-deductible coinsurance rate; and
D = the effective deductible.

Therefore, continuing the example from above, where a standard plan has an effective deductible of $1,000 and an effective post-deductible coinsurance rate of 29 percent, assume the standard plan also has an annual limitation on cost sharing of $6,000. The effective claims ceiling would be $18,241 (that is, 1,000 + ((6,000 − 1,000)/0.29)).

We request comment on these instructions for determining the effective cost-sharing parameters of a standard plan, including their ability to accurately characterize the experience of an enrollee in the standard plan, and the potential administrative burden associated with the calculations. We also welcome comment on alternative methods for estimating the cost sharing required under the standard plan. For example, we also considered whether simply using the proportion of total allowed costs that were payable as cost sharing under the standard plan would be an appropriate estimate of the amount the enrollee(s) would have paid under the standard plan. We seek comment on this alternative approach, as well as other alternatives.

In § 156.430(c)(4)(iii), we establish additional standards for QHP issuers that elect to use the simplified methodology. These provisions will allow HHS to ensure that QHP issuers are appropriately developing the effective cost-sharing parameters based on the actual experience of the enrollees in the standard plan. Specifically, we specify that QHP issuers submit to HHS, in the manner and timeframe established by HHS, the following information for each standard plan, for both self-only coverage and other than self-only coverage offered by the QHP issuer in the individual market through the Exchange: the effective deductible; the effective pre-deductible coinsurance rate; the effective post-deductible coinsurance rate; the effective claims ceiling; and a memorandum developed by a member of the American Academy of Actuaries in accordance with generally accepted actuarial principles and methodologies that describes how the QHP issuer calculated the effective cost-sharing parameters for the standard plan. We seek comment on whether HHS should require any other data submissions or establish any additional standards to oversee these provisions.

We recognize that because the effective pre- and post-deductible coinsurance rates are calculated based on the average experience of the enrollees in the standard plan, low enrollment in the standard plan could lead to inaccurate effective coinsurance rates. Therefore, we provide additional standards related to the simplified methodology in § 156.430(c)(4)(iv) to address credibility concerns that may result from low enrollment in the standard plan. We establish that if a standard plan has an enrollment during the benefit year of fewer than 12,000 member months (that is, the sum of the months that each enrollee is covered by the plan) in any of the four subgroups delineated below, and the QHP issuer has selected the simplified methodology, then the QHP issuer must calculate the amount that the enrollee(s) would have paid under the standard plan for enrollees in all subgroups by applying the standard plan's actuarial value, as calculated under § 156.135, to the allowed costs for EHB for the enrollee(s) for the benefit year. We establish four subgroups to align with the policy implemented in § 156.430(c)(4)(iii), which requires that the effective cost-sharing parameters be calculated separately for self-only and other than self-only coverage. The subgroups are enrollees in the standard plan with: (1) Self-only coverage with total allowed costs for EHB for the benefit year that are less than or equal to the effective deductible; (2) other than self-only coverage with total allowed costs for EHB for the benefit year that are less than or equal to the effective deductible; (3) self-only coverage with total allowed costs for EHB for the benefit year that are greater than the effective deductible, but below the effective claims ceiling; and (4) other than self-only coverage with total allowed costs for EHB for the benefit year that are greater than the effective deductible, but below the effective claims ceiling. A subgroup is not necessary for the enrollees with total allowed costs for EHB for the benefit year that are greater than the effective claims ceiling because the experience of this population is not used to calculate the effective cost-sharing parameters.

The credibility standard of 12,000 member months aligns with a similar standard used by the Medicare Part D program; however, we seek comment on the appropriate amount of member months to achieve credible use of the simplified methodology. We believe that a population with member months below this standard would not provide adequate data on which to base the effective cost-sharing parameters. If a QHP issuer does not have adequate enrollment in any of the four subgroups, we believe the standard plan's actuarial value will provide an adequate substitute for the effective cost-sharing parameters if applied to all policies in all four subgroups. We seek comment on the credibility standard of 12,000 member months, and whether the standard plan's actuarial value applied to the allowed costs for EHB for the enrollee(s) for the benefit year will provide an appropriate estimate of the amount of cost sharing that the enrollee(s) would have paid under the standard plan without cost-sharing reductions. We seek comment on alternative approaches for QHP issuers with low enrollment for estimating the amount of cost sharing that the enrollee(s) would have paid under the standard plan. We also seek comment on the composition of these subgroups and whether they appropriately divide enrollees based on their utilization patterns, or whether any subgroups are required at all. We seek comment on whether low enrollment in one subgroup should prompt the QHP issuer to use the actuarial value for enrollees in all subgroups or just the subgroup with low enrollment.

We appreciate the possibility that, for a very small number of plans with

unique cost-sharing structures, the amounts that enrollees would have been paid under the plan cannot fairly be estimated using the simplified methodology described in paragraph (c). We are considering a process in which a QHP issuer of such a plan may notify HHS if it believes that such is the case for one or more of its plans. We are considering requiring such a notification within ninety days of the beginning of the applicable benefit year, and we are considering requiring the QHP issuer to provide information on the unique plan design supporting the QHP issuer's assessment.

Under this approach, if HHS were to agree with the assessment, we are considering requiring that the QHP issuer calculate the amount that the enrollee(s) would have paid under the standard plan without cost-sharing reductions by applying the standard plan's actuarial value, as calculated pursuant to § 156.135, to the allowed costs for essential health benefits for the enrollee(s) for the benefit year. If HHS were to disagree with the issuer's assessment, the QHP issuer would calculate such amounts using the effective cost-sharing parameters under the approach described in paragraphs (4)(i) through (4)(iii) or (4)(iv), if applicable, of § 156.430.

We seek comment on whether we should adopt such an approach, and on the specifics outlined above. In particular, we seek comment on the types of plans, if any, for which it will be difficult to fairly calculate the amount that the enrollee(s) would have paid under the standard plan without cost-sharing reductions using the simplified methodology, and their prevalence. We seek comment on the standard that should apply for determining whether the plan will be exempted from using the simplified methodology, and how HHS should make that determination. Finally, we seek comment on what estimation methodology should be used if the plan is determined to be exempt, and if it is not. Section 156.430(c)(5), finalized in the 2014 Payment Notice, provides that in the case of a benefit for which the QHP issuer compensates an applicable provider in whole or in part on a fee-for-service basis, allowed costs associated with the benefit may be included in the calculation of the amount that an enrollee(s) would have paid under the standard plan without cost-sharing reductions only to the extent the amount was either payable by the enrollee(s) as cost sharing under the plan variation or was reimbursed to the provider by the QHP issuer. We note that this provision applies to calculations using either the standard methodology or the simplified methodology.

IV. Waiver of Proposed Rulemaking

We ordinarily publish a notice of proposed rulemaking in the **Federal Register** and invite public comment on the proposed rule. The notice of proposed rulemaking includes a reference to the legal authority under which the rule is proposed, and the terms and substances of the proposed rule or a description of the subjects and issues involved. However, under section 553(b) of the Administrative Procedure Act (APA) (5 U.S.C. 551 *et seq.*), a general notice of proposed rulemaking is not required when an agency, for good cause, finds that notice and public comment thereon are impracticable, unnecessary, or contrary to the public interest, and incorporates a statement of the finding and its reasons in the rule issued. The Secretary has determined that it would be impracticable to delay finalizing the provisions of this regulation until a public notice and comment process is complete.

Section 1321(b) of the Affordable Care Act directs that Exchanges be operational by January 1, 2014, and section 1311(b)(6) of the Affordable Care Act directs that the Exchanges permit individuals to apply for coverage during annual open enrollment periods. Accordingly, § 155.410(b) establishes that Exchanges must be available to enroll individuals in QHPs beginning October 1, 2013. In order to meet this enrollment deadline and offer QHPs on the Exchange, QHP issuers must develop premium rates and plan offerings for QHPs to be offered on the Exchanges. Issuers must then seek and obtain approval of their rates and plan offerings from the applicable State Departments of Insurance, and submit their rates and plan offerings to the Exchange beginning April 1, 2013. In order to meet these statutorily driven deadlines, final rulemaking relating to the risk corridors program and the cost-sharing reduction program must be in effect so that QHP issuers can take these programs appropriately into account when developing their rates. The temporary risk corridors program will protect against uncertainty in rates for QHPs by limiting the extent of issuer losses and gains and will permit issuers to offer lower rates by not adding a risk premium to account for perceived uncertainties in the 2014 through 2016 markets. If the provisions of this regulation were proposed under a standard 60-day notice and comment process, QHP issuers would not have the information needed to develop rates and products for the Exchanges and meet the October 1, 2013 deadline for open enrollment.

Additionally, because the cost-sharing reduction provisions implemented in this regulation provide issuers with information that will affect how they prepare their information systems to process cost-sharing reductions, any delay in the effective date of those provisions would adversely affect issuers' operational readiness. For the reasons described above, we believe that issuing this regulation on an interim final basis is necessary in order to avoid regulatory confusion for the affected industry and to ensure effective compliance with existing regulations.

HHS solicited public comment on the risk corridors program in the proposed Premium Stabilization Rule and the proposed Payment Notice. HHS solicited public comment on the cost-sharing reductions program in the AV/CSR Bulletin, and in the proposed Payment Notice. Comments in response to these documents were considered in the development of this regulation. In light of these comments and based on the Secretary's determination that a delay of these rules would be impracticable, the Secretary finds good cause to waive the notice of proposed rulemaking and to issue this final rule on an interim basis. As a result of the timing constraints, we are providing a 60-day public comment period, and intend to address comments received.

V. Collection of Information Requirements

Under the Paperwork Reduction Act of 1995, we are required to provide 60-day notice in the **Federal Register** and solicit public comment before a collection of information requirement is submitted to the Office of Management and Budget (OMB) for review and approval. An agency may not conduct or sponsor, and a person is not required to respond to, a collection of information unless it displays a control number assigned by OMB.

This interim final rule with comment modifies some of the information collections listed in the 2014 Payment Notice, and adds one additional information collection. We plan to seek OMB approval at a later date for these information collections. HHS will issue future **Federal Register** notices to seek comments on those information collections, as required by 3506(c)(2)(A) of the Paperwork Reduction Act. Included among such information collections for which HHS plans to seek later approval are those described below.

The amendments we make for the risk corridors program in this interim final rule with comment will not increase the information collection burden of the program established by and described in the Premium Stabilization Rule and the HHS Notice of Benefit and Payment Parameters for 2014. This interim final rule with comment modifies the calculation of allowable costs in the risk corridors calculation, but does not establish any information collection requirements beyond those already established in § 153.530. The information collection process and instruments associated with the risk corridors program data submission requirements under § 153.530 are currently under development. We will seek OMB approval and solicit public comments upon their completion.

In this interim final rule with comment, we build on the standards finalized in the 2014 Payment Notice related to the administration of cost-sharing reductions and add provisions to paragraphs (c)(3) and (4) of § 156.430. We provide standards to permit QHP issuers greater flexibility in the manner in which the value of cost-sharing reduction amounts are calculated. In paragraph (c)(3), we specify that QHP issuers may choose to calculate the amounts that would have been paid under the standard plan without cost-sharing reductions using a simplified methodology, as an alternative to the standard methodology described in the 2014 Payment Notice final rule at § 156.430(c)(2). In addition, we establish a new information collection requirement in paragraph (3)(i), under which a QHP issuer must notify HHS prior to the start of each benefit year whether or not it selects the simplified methodology for the benefit year. While this information collection requirement is subject to the Paperwork Reduction Act, the information collection process and instruments associated with this requirement are currently under development. We will seek OMB approval and solicit public comments upon their completion. We estimate that the burden associated with the information collection requirement will be no more than one million dollars (assuming 1,200 issuers participate in an Exchange nationally, and each issuer has a reporting burden of approximately $700, which primarily represents the cost of the analysis performed by the QHP issuer to determine whether or not to use the simplified methodology).

In § 156.430(c)(4) we set forth a simplified methodology for calculating the value of the amount that the enrollee(s) would have paid under the standard plan without cost-sharing reductions. We believe this methodology will reduce the administrative burden for certain QHP issuers, yet continue to provide a relatively accurate accounting of the cost-sharing reductions provided. If a QHP issuer uses the simplified methodology, the QHP issuer must also submit estimated cost-sharing parameters and an actuarial memorandum, as described in § 156.430(c)(4)(iii); however, we expect this information collection to require a limited amount of analysis by a QHP issuer's actuaries. These information collections associated with these provisions are subject to the Paperwork Reduction Act; however, the information collection process and instruments associated with this requirement are currently under development. We will seek OMB approval and solicit public comments upon their completion. Below we provide an initial estimate of the incremental burden associated with the provisions in § 156.430(c)(4). Under the provisions finalized in the 2014 Payment Notice, all QHP issuers must use the standard methodology; however, the provisions in this interim final rule with comment provide a choice of methodologies. To estimate the incremental effect of the simplified methodology, we compare the burden of the standard methodology to the simplified methodology for those issuers that we assume select the simplified methodology.

As discussed in the Collection of Information section in the 2014 Payment Notice, we estimate that 1,200 issuers will participate in an Exchange nationally and will incur total costs of approximately $138 million using the standard methodology. In contrast, we estimate that each issuer using the simplified methodology set forth in this interim final rule with comment will incur labor costs of 40 hours of work by an actuary and (at a wage rate of $56.89) and 20 hours of work by an insurance manager (at a wage rate of $67.44) to develop the effective cost-sharing parameters and actuarial memorandum, and calculate the amount of cost-sharing reductions provided, resulting in a cost of approximately $3,624 per issuer.[4] Although we cannot predict the precise number of issuers that will select either the standard or simplified methodology, we estimate that approximately half of QHP issuers (600 issuers) will implement the simplified methodology. Therefore, we estimate that the provisions of this rule will result in an incremental savings of approximately $57,825,600 ($60 million that would have been incurred by these issuers under the standard methodology, minus 600 multiplied by $3,624) by reducing the overall administrative costs that issuers incur.

[4] HHS relied on the Bureau of Labor Statistics, U.S. Department of Labor, *National Compensation Survey Occupational Earnings in the United States, 2011,* for estimates of job descriptions and wages.

VI. Response to Comments

Because of the large number of public comments we normally receive on **Federal Register** documents, we are not able to acknowledge or respond to them individually. We will consider all comments we receive by the date and time specified in the **DATES** section of this preamble, and, when we proceed with a subsequent document, we will respond to the comments in the preamble to that document.

VII. Regulatory Impact Analysis

This interim final rule with comment implements amendments to the calculation of allowable costs under the risk corridors program and to the methodology for calculating the amounts of cost-sharing reductions provided. The amendments to the risk corridors program are needed to align that program with the single risk pool requirements at § 156.80 so that both allowable costs and the target amount in that calculation are calculated based on a QHP's share of total amounts pooled across an issuer's non-grandfathered plans in a market. This change will permit the program to have its intended effect—to share in profits or losses resulting from inaccurate rate setting from 2014 to 2016. Without these changes, pooled premiums would be compared against unpooled claims costs, which we believe was not the intent of the statute because it would lessen the effect of the risk corridors program on stabilizing premiums. The amendments to the cost-sharing reduction standards are needed to lessen the burden of participating in that program for QHP issuers who cannot easily alter their information technology systems to calculate the amount of cost-sharing reductions provided according to the methodology specified in the 2014 Payment Notice.

We have examined the impact of this rule as required by Executive Order 12866 on Regulatory Planning and Review (September 30, 1993), Executive Order 13563 on Improving Regulation and Regulatory Review (January 18, 2011), the Regulatory Flexibility Act (RFA) (September 19, 1980, Pub. L. 96–354), section 1102(b) of the Social Security Act, section 202 of the Unfunded Mandates Reform Act of 1995

(March 22, 1995; Pub. L. 104–4), Executive Order 13132 on Federalism (August 4, 1999) and the Congressional Review Act (5 U.S.C. 804(2)).

Executive Orders 12866 and 13563 direct agencies to assess all costs and benefits of available regulatory alternatives and, if regulation is necessary, to select regulatory approaches that maximize net benefits (including potential economic, environmental, public health and safety effects, distributive impacts, and equity). A regulatory impact analysis (RIA) must be prepared for major rules with economically significant effects ($100 million or more in any one year). As discussed in the Collection of Information Requirements section, we believe that § 156.430(c)(3) will add approximately $1 million in reporting burden. We also believe that the addition of paragraph (c)(4) to § 156.430 will reduce the administrative burden associated with complying with § 156.430(c)(1) in the specified timeframe, particularly for smaller issuers, by approximately $66,825,600.

In addition, although this interim final rule with comment amends § 153.500 to modify the manner in which QHP issuers will calculate allowable costs for the purposes of the risk corridors calculation, we do not believe that this change to the risk corridors calculation method will have a significant effect on the aggregate amount of risk corridors payments made in any one year. Additionally, we do not believe that these amendments will substantially alter the analysis provided in previous impact analyses of the risk corridors program in the Premium Stabilization Rule and the 2014 Payment Notice.

We conclude that this interim final rule with comment does not reach the economic threshold and thus is not considered a major rule.

The RFA requires agencies to analyze options for regulatory relief of small entities. For purposes of the RFA, small entities include small businesses, nonprofit organizations, and small governmental jurisdictions. Most hospitals and most other providers and suppliers are small entities, either by nonprofit status or by having revenues of $7 million to $35.5 million in any one year. Individuals and States are not included in the definition of a small entity. We are not preparing an analysis for the RFA because we have determined, and the Secretary certifies, that this interim final rule with comment would not have a significant economic impact on a substantial number of small entities.

The Regulatory Flexibility Act (5 U.S.C. 601 *et seq.*) (RFA) requires agencies to prepare a final regulatory flexibility analysis to describe the impact of the final rule on small entities, unless the head of the agency can certify that the rule will not have a significant economic impact on a substantial number of small entities. The RFA generally defines a ''small entity'' as (1) a proprietary firm meeting the size standards of the Small Business Administration (SBA), (2) a not-for-profit organization that is not dominant in its field, or (3) a small government jurisdiction with a population of less than 50,000. States and individuals are not included in the definition of ''small entity.'' HHS uses a change in revenues of more than three to five percent as its measure of significant economic impact on a substantial number of small entities.

This final rule contains rules for health plan issuers regarding the temporary risk corridors program and the cost-sharing reduction program. We believe that health insurance issuers and plan sponsors would be classified under the North American Industry Classification System (NAICS) code 524114. According to SBA size standards, an entity with average annual receipts of $7 million or less would be considered small entities for this NAICS code. We believe that few insurance firms offering comprehensive health insurance policies fall below this size threshold for ''small entities'' established by the SBA. Therefore, we are not preparing a regulatory flexibility analysis because we have determined, and the Secretary certifies, that this interim final rule with comment will not have a significant impact on the operations of a substantial number of small entities.

Section 202 of the Unfunded Mandates Reform Act of 1995 (UMRA) also requires that agencies assess anticipated costs and benefits before issuing any rule whose mandates require spending in any one year by State, local, or Tribal governments, or by the private sector, of $100 million in 1995 dollars, updated annually for inflation. In 2013, that threshold is approximately $141 million. Since the impact on State, local, and Tribal governments, and the private sector is below this threshold, no analysis under UMRA is required.

Executive Order 13132 establishes certain requirements that an agency must meet when it promulgates a rule that imposes substantial direct requirement costs on State and local governments, preempts State law, or otherwise has Federalism implications. This interim final rule with comment does not impose any costs on State or local governments and does not preempt State law. The amendments to the cost-sharing reduction program set forth in this rule have no Federalism implications, but the amendments to the risk corridors program have the effect of complementing a State's authority to regulate and enforce the single risk pool requirement. Thus, we believe this interim final rule with comment has positive Federalism implications.

This interim final rule with comment is subject to the Congressional Review Act provisions of the Small Business Regulatory Enforcement Fairness Act of 1996 (5 U.S.C. 801 et seq.), which specifies that before a rule can take effect, the Federal agency promulgating the rule shall submit to each House of the Congress and to the Comptroller General a report containing a copy of the rule along with other specified information, and has been transmitted to Congress and the Comptroller General for review.

List of Subjects

45 CFR Part 153

Administrative practice and procedure, Adverse selection, Health care, Health insurance, Health records, Organization and functions (Government agencies), Premium stabilization, Reporting and recordkeeping requirements, Reinsurance, Risk adjustment, Risk corridors, Risk mitigation, State and local governments.

45 CFR Part 156

Administrative practice and procedure, Advertising, Advisory Committees, Brokers, Conflict of interest, Consumer protection, Grant programs-health, Grants administration, Health care, Health insurance, Health maintenance organization (HMO), Health records, Hospitals, American Indian/Alaska Natives, Individuals with disabilities, Loan programs-health, Organization and functions (Government agencies), Medicaid, Public assistance programs, Reporting and recordkeeping requirements, State and local governments, Sunshine Act, Technical assistance, Women, and Youth.

For the reasons set forth in the preamble, the Department of Health and Human Services amends 45 CFR parts 153 and 156 as set forth below:

PART 153—STANDARDS RELATED TO REINSURANCE, RISK CORRIDORS, AND RISK ADJUSTMENT UNDER THE AFFORDABLE CARE ACT

■ 1. The authority citation for part 153 continues to read as follows:

Authority: Secs. 1321, 1341–1343, Pub. L. 111–148, 24 Stat. 119.

■ 2. Section 153.500 is amended by revising the definition of ''Allowable costs'' to read as follows:

§ 153.500 Definitions.

* * * * *

Allowable costs means, with respect to a QHP, an amount equal to the pro rata portion of the sum of incurred claims within the meaning of § 158.140 of this subchapter (including adjustments for any direct and indirect remuneration), expenditures by the QHP issuer for the QHP for activities that improve health care quality as set forth in § 158.150 of this subchapter, expenditures by the QHP issuer for the QHP related to health information technology and meaningful use requirements as set forth in § 158.151 of this subchapter, and the adjustments set forth in § 153.530(b); in each case for all of the QHP issuer's non-grandfathered health plans in a market within a State, allocated to the QHP based on premiums earned.

* * * * *

■ 3. Section 153.520 is amended by revising paragraphs (a) and (b) to read as follows:

§ 153.520 Attribution and allocation of revenue and expense items.

(a) *Attribution to QHP.* Each item of revenue or expense in the target amount with respect to a QHP must be reasonably attributable to the operation of the QHP, with the attribution based on a generally accepted accounting method, consistently applied. To the extent that an issuer utilizes a specific method for allocating expenses for purposes of § 158.170 of this subchapter, the method used for purposes of this paragraph must be consistent.

(b) *Allocation across plans.* Each item of revenue or expense in the target amount must be reasonably allocated across a QHP issuer's plans, with the allocation based on a generally accepted accounting method, consistently applied. To the extent that an issuer utilizes a specific method for allocating expenses for purposes of § 158.170 of this subchapter, the method used for purposes of this paragraph must be consistent.

* * * * *

PART 156—HEALTH INSURANCE ISSUER STANDARDS UNDER THE AFFORDABLE CARE ACT, INCLUDING STANDARDS RELATED TO EXCHANGES

■ 4. The authority citation for part 156 continues to read as follows:

Authority: Title I of the Affordable Care Act, sections 1301–1304, 1311–1312, 1321–1322, 1324, 1334, 1342–1343, 1401–1402, and 1412, Pub. L. 111–148, 124 Stat. 119 (42 U.S.C. 18021–18024, 18031–18032, 18041–18042, 18044, 18054, 18061, 18063, 18071, 18082, 26 U.S.C. 36B, and 31 U.S.C. 9701).

■ 5. Section 156.430 is amended by adding paragraphs (c)(3) and (c)(4) to read as follows:

§ 156.430 Payment for cost-sharing reductions.

* * * * *

(c) * * *

(3) *Selection of methodology.* Notwithstanding paragraph (c)(2) of this section, a QHP issuer may choose to calculate the amounts that would have been paid under the standard plan without cost-sharing reductions using a simplified methodology specified in paragraph (c)(4) of this section.

(i) The QHP issuer must notify HHS prior to the start of each benefit year, in the manner and timeframe established by HHS, whether or not it selects the simplified methodology for the benefit year.

(ii) If the QHP issuer selects the simplified methodology, it must apply the simplified methodology to all plan variations it offers on the Exchange for a benefit year.

(iii) The QHP issuer may not select the simplified methodology described in paragraph (c)(4) of this section for a benefit year if the QHP issuer did not select the simplified methodology for the prior benefit year.

(iv) Notwithstanding paragraphs (c)(3)(ii) and (c)(3)(iii) of this section, if a QHP issuer merges with or acquires another issuer of QHPs on the Exchange, or acquires a QHP offered on the Exchange from another QHP issuer, and if one, but not all, of the merging, acquiring, or acquired parties had selected the simplified methodology for the benefit year, then for the benefit year in which the merger or acquisition took place, the QHP issuer must calculate the amounts that would have been paid using the standard methodology described in paragraph (c)(2) of this section, or as calculated under the simplified methodology, as applicable, if selected prior to the start of the benefit year for each plan variation (even if the selection was not made by that QHP issuer). For the next benefit year, the QHP issuer may select the simplified methodology (subject to paragraph (c)(3)(ii) of this section but, for that benefit year, not paragraph (c)(3)(iii) of this section) or the methodology specified in paragraph (c)(2) of this section.

(4) *Simplified methodology.* Subject to paragraph (c)(4)(iv) of this section, a QHP issuer that selects the simplified methodology described in this paragraph (c)(4) must calculate the amount that the enrollee(s) would have paid under the standard plan without cost-sharing reductions by applying the standard plan's effective cost-sharing parameters (as calculated under paragraph (c)(4)(ii) of this section) to the total allowed costs for essential health benefits under each policy for the benefit year (as described in paragraph (c)(4)(i) of this section).

(i) For policies with total allowed costs for essential health benefits for the benefit year that are—

(A) Less than or equal to the effective deductible, the amount that the enrollee(s) would have paid under the standard plan is equal to the total allowed costs for essential health benefits under the policy for the benefit year multiplied by the effective pre-deductible coinsurance rate.

(B) Greater than the effective deductible but less than the effective claims ceiling, the amount that the enrollee(s) would have paid under the standard plan is equal to the sum of (x) the effective deductible, plus (y) the product of the allowed costs for essential health benefits under the policy for the benefit year above the effective deductible, multiplied by the effective post-deductible coinsurance rate.

(C) Greater than the effective claims ceiling, the amount that the enrollee(s) would have paid under the standard plan is equal to the sum of (x) the effective deductible, plus (y) the product of the allowed costs for essential health benefits between the effective deductible and the effective claims ceiling, multiplied by the effective post-deductible coinsurance rate.

(ii) The effective cost-sharing parameters for the standard plan without cost-sharing reductions must be calculated separately for both self-only coverage and other than self-only coverage as follows—

(A) If the standard plan has no deductible, the effective deductible of the standard plan is zero. If the standard plan has only one deductible, the effective deductible of the standard plan is that deductible amount. If the standard plan has more than one

deductible, the effective deductible is the weighted average deductible, weighted by allowed claims for essential health benefits under the plan for the benefit year that are subject to each separate deductible. Services that are not subject to any deductible (including services subject to copays or coinsurance but not subject to the deductible) are not to be incorporated into the weighted average calculation of the effective deductible.

(B) The effective pre-deductible coinsurance rate is based on standard plan policies with total allowed costs for essential health benefits for the benefit year that are less than or equal to the effective deductible, and calculated as the proportion of the total allowed costs for essential health benefits under the standard plan for the benefit year incurred for those standard plan enrollees and payable as cost sharing.

(C) The effective post-deductible coinsurance rate is based on standard plan policies with total allowed costs for essential health benefits for the benefit year that are above the effective deductible but for which associated cost sharing is less than the annual limitation on cost sharing, and calculated as the quotient of (x) the portion of average allowed costs for essential health benefits for the benefit year incurred for those enrollee(s) and payable by the enrollees as cost sharing other than through a deductible, divided by (y) the average allowed costs for essential health benefits for the benefit year above the effective deductible.

(D) The effective claims ceiling is calculated as the effective deductible plus the quotient of (x) the difference between the annual limitation on cost sharing and the effective deductible, divided by (y) the effective post-deductible coinsurance rate.

(iii) *Submission of effective cost-sharing parameters.* If a QHP issuer uses the simplified methodology described in this paragraph (c)(4), the QHP issuer must also submit to HHS, in the manner and timeframe established by HHS, the following information for each standard plan, for both self-only coverage and other than self-only coverage, offered by the QHP issuer in the individual market through the Exchange—

(A) The effective deductible.

(B) The effective pre-deductible coinsurance rate.

(C) The effective post-deductible coinsurance rate.

(D) The effective claims ceiling.

(E) A memorandum developed by a member of the American Academy of Actuaries in accordance with generally accepted actuarial principles and methodologies that describes how the QHP issuer calculated the effective cost-sharing parameters for the standard plan.

(iv) *Minimum credibility.* Notwithstanding paragraphs (c)(4)(i) through (c)(4)(iii) of this section, if the standard plan without cost-sharing reductions has an enrollment during the benefit year of fewer than 12,000 member months in any of the following four subgroups, and the QHP issuer has selected the simplified methodology described in this paragraph (c)(4), then the QHP issuer must calculate the amount that the enrollee(s) would have paid under the standard plan without cost-sharing reductions for all subgroups by applying the standard plan's actuarial value, as calculated under § 156.135, to the allowed costs for essential health benefits for the enrollee(s) for the benefit year. For purposes of this paragraph (c)(4)(iv), the four subgroups are:

(A) Enrollees in the standard plan with self-only coverage with total allowed costs for essential health benefits for the benefit year that are less than or equal to the effective deductible.

(B) Enrollees in the standard plan with other than self-only coverage with total allowed costs for essential health benefits for the benefit year that are less than or equal to the effective deductible.

(C) Enrollees in the standard plan with self-only coverage with total allowed costs for essential health benefits for the benefit year that are greater than the effective deductible, but below the effective claims ceiling.

(D) Enrollees in the standard plan with other than self-only coverage with total allowed costs for essential health benefits for the benefit year that are greater than the effective deductible, but below the effective claims ceiling.

* * * * *

Dated: February 25, 2013.

Marilyn Tavenner,

Acting Administrator, Centers for Medicare & Medicaid Services.

Approved: February 27, 2013.

Kathleen Sebelius,

Secretary, Department of Health and Human Services.

[FR Doc. 2013–04904 Filed 3–1–13; 11:15 am]

BILLING CODE P

DEPARTMENT OF HEALTH AND HUMAN SERVICES

45 CFR Parts 155 and 156

[CMS–9964–P2]

RIN 0938–AR76

Patient Protection and Affordable Care Act; Establishment of Exchanges and Qualified Health Plans; Small Business Health Options Program

AGENCY: Centers for Medicare & Medicaid Services (CMS), HHS.

ACTION: Proposed rule.

SUMMARY: This proposed rule would implement provisions of the Patient Protection and Affordable Care Act and the Health Care and Education Reconciliation Act of 2010 (collectively referred to as the Affordable Care Act) related to the Small Business Health Options Program (SHOP). Specifically, this proposed rule would amend existing regulations regarding triggering events and special enrollment periods for qualified employees and their dependents and would implement a transitional policy regarding employees' choice of qualified health plans (QHPs) in the SHOP.

DATES: To be assured consideration, comments must be received at one of the addresses provided below, no later than 5 p.m. on April 1, 2013.

ADDRESSES: In commenting, please refer to file code CMS–9964–P2. Because of staff and resource limitations, we cannot accept comments by facsimile (FAX) transmission.

You may submit comments in one of four ways (please choose only one of the ways listed):

1. *Electronically.* You may submit electronic comments on this regulation to *http://www.regulations.gov.* Follow the ''Submit a comment'' instructions.

2. *By regular mail.* You may mail written comments to the following address only: Centers for Medicare & Medicaid Services, Department of Health and Human Services, Attention: CMS–9964–P2, P.O. Box 8016, Baltimore, MD 21244–8016.

Please allow sufficient time for mailed comments to be received before the close of the comment period.

3. *By express or overnight mail.* You may send written comments to the following address only: Centers for Medicare & Medicaid Services, Department of Health and Human Services, Attention: CMS–9964–P2, Mail Stop C4–26–05, 7500 Security Boulevard, Baltimore, MD 21244–1850.

4. *By hand or courier.* Alternatively, you may deliver (by hand or courier) your written comments only to the following addresses prior to the close of the comment period:

a. For delivery in Washington, DC—Centers for Medicare & Medicaid Services, Department of Health and Human Services, Room 445–G, Hubert H. Humphrey Building, 200 Independence Avenue SW., Washington, DC 20201. (Because access to the interior of the Hubert H. Humphrey Building is not readily available to persons without Federal government identification, commenters are encouraged to leave their comments in the CMS drop slots located in the main lobby of the building. A stamp-in clock is available for persons wishing to retain a proof of filing by stamping in and retaining an extra copy of the comments being filed.)

b. For delivery in Baltimore, MD—Centers for Medicare & Medicaid Services, Department of Health and Human Services, 7500 Security Boulevard, Baltimore, MD 21244–1850.

If you intend to deliver your comments to the Baltimore address, call telephone number (410) 786–7195 in advance to schedule your arrival with one of our staff members.

Comments erroneously mailed to the addresses indicated as appropriate for hand or courier delivery may be delayed and received after the comment period.

For information on viewing public comments, see the beginning of the **SUPPLEMENTARY INFORMATION** section.

FOR FURTHER INFORMATION CONTACT: Leigha Basini at (301) 492–4307.

SUPPLEMENTARY INFORMATION: *Inspection of Public Comments:* All comments received before the close of the comment period are available for viewing by the public, including any personally identifiable or confidential business information that is included in a comment. We post all comments received before the close of the comment period on the following Web site as soon as possible after they have been received: *http://www.regulations.gov.* Follow the search instructions on that Web site to view public comments.

Comments received timely will also be available for public inspection as they are received, generally beginning approximately 3 weeks after publication of a document, at the headquarters of the Centers for Medicare & Medicaid Services, 7500 Security Boulevard, Baltimore, Maryland 21244, Monday through Friday of each week from 8:30 a.m. to 4 p.m. To schedule an appointment to view public comments, phone 1–800–743–3951.

I. Executive Summary

Beginning in 2014, individuals and small businesses will be able to purchase private health insurance through competitive marketplaces, called Affordable Insurance Exchanges or ''Exchanges.'' Section 1311(b)(1)(B) of the Affordable Care Act directs each state that chooses to operate an Exchange to also establish a SHOP that assists eligible small businesses in providing health insurance options for their employees. The final rule Patient Protection and Affordable Care Act; Establishment of Exchanges and Qualified Health Plans; Exchange Standards for Employers (Exchange Establishment Rule) [1] as modified by the Notice of Benefit and Payment Parameters for 2014, published elsewhere in this issue of the **Federal Register**, set forth standards for the administration of SHOP Exchanges. In this proposed rule, we would amend some of the standards established in that final rule.

In the Exchange Establishment Rule, we established standards for special enrollment periods for people enrolled through an Exchange or SHOP and provided that, in most instances, a special enrollment period is 60 days from the date of the triggering event. *See* 45 CFR 155.420. We also made these provisions applicable to SHOPs, at § 155.725(a)(3). We now propose to amend the special enrollment period for the SHOP to 30 days for most applicable triggering events, so that it aligns with the special enrollment periods for the group market established by the Health Insurance Portability and Accountability Act of 1996 (HIPAA). To further align the SHOP provisions with HIPAA, we also propose that if an employee or dependent becomes eligible for premium assistance under Medicaid or the Children's Health Insurance Program (CHIP) or loses eligibility for Medicaid or CHIP, this would be a triggering event, and the employee or dependent would have a 60-day special enrollment period to select a QHP. This triggering event had previously been inadvertently omitted from the regulations because it applies only to group health plans and health insurance coverage in the group market. We are also proposing to make a conforming change to § 156.285(b)(2), so that this section references the SHOP special enrollment periods in a way that

[1] Patient Protection and Affordable Care Act; Establishment of Exchanges and Qualified Health Plans; Exchange Standards for Employers, 77 FR 18310 (Mar. 27, 2012) (to be codified at 45 CFR parts 155, 156, & 157).

is consistent with our proposed changes to § 155.725.

In the Exchange Establishment Rule, we also set forth the minimum functions of a SHOP, including that the SHOP must allow employers the option to offer employees all QHPs at a level of coverage chosen by the employer, and that the SHOP may allow employers to offer one or more QHPs to qualified employees by other methods. We now propose the following transitional policy. For plan years beginning on or after January 1, 2014 and before January 1, 2015, a SHOP would not be required to permit qualified employers to offer their qualified employees a choice of QHPs at a single level of coverage but would have the option of doing so. For plan years beginning on or after January 1, 2014 and before January 1, 2015, Federally-facilitated SHOPs (FF–SHOPs) would not exercise this option, but would instead assist employers in choosing a single QHP to offer their qualified employees. This transitional policy is intended to provide additional time to prepare for an employee choice model and to increase the stability of the small group market while providing small groups with the benefits of SHOP in 2014 (such as a choice among competing QHPs and access for qualifying small employers to the small business health insurance tax credit). We are also proposing changes to the effective date of the SHOP premium aggregation function set forth at § 155.705(b)(4) in the Exchange Establishment Rule consistent with this transitional policy.

II. Background

A. Legislative Overview

Section 1311(b) of the Affordable Care Act establishes that each state that operates an Exchange will also operate a SHOP. The SHOP is designed to assist qualified small employers in providing health insurance options to their employees.

Section 1311(c)(6) of the Affordable Care Act sets forth that the Secretary of Health and Human Services (HHS) shall require Exchanges to provide for special enrollment periods. Section 155.420 of the Exchange Establishment Rule established special enrollment periods for the individual market, and § 155.725(a)(3) established them for the SHOP.

Section 1312(a)(2) of the Affordable Care Act provides that qualified employers may offer qualified employees a choice among all QHPs at a level of coverage chosen by the employer. Section 1312(f)(2)(A) defines a qualified employer as a small employer that elects to make all full-time employees of such employer eligible for one or more QHPs offered in the small group market through an Exchange that offers QHPs. The Exchange Establishment Rule set forth standards for the SHOP and implemented section 1312 at 45 CFR, part 155, subpart H.

B. Stakeholder Consultation and Input

HHS has consulted with a wide range of interested stakeholders on policy matters related to the SHOP, including through regular conversations with the National Association of Insurance Commissioners (NAIC), health insurance issuers, trade groups, consumer advocates, employers, agents and brokers, and other interested parties. HHS has also held many consultations with states about the SHOP, both individually and through group conversations. HHS received many comments in response to the Exchange Establishment proposed rule,[2] including comments regarding the statutory provisions on SHOP employee choice and special enrollment periods for employees and their dependents, to which we responded in the Exchange Establishment Rule. HHS also received comments in response to the December 2012 Notice of Benefit and Payment Parameters for 2014 proposed rule,[3] to which we responded in the Notice of Benefit and Payment Parameters for 2014 final rule, published elsewhere in this issue of the **Federal Register**. We considered these stakeholder comments in developing this proposed rule.

C. Structure of the Proposed Rule

The regulations outlined in this proposed rule would be codified in 45 CFR parts 155 and 156. The provisions in part 155 outline the standards relative to the establishment, operation, and functions of Exchanges, including the SHOP. The provisions in part 156 outline the health insurance issuer standards under the Affordable Care Act, including standards related to Exchanges and SHOPs.

III. Provisions of the Proposed Regulations

A. Part 155—Exchange Establishment Standards and Other Related Standards Under the Affordable Care Act

1. Subpart H—Exchange Functions: Small Business Health Options Program (SHOP)

a. Functions of a SHOP (§ 155.705)

Facilitating employee choice at a single level of coverage selected by the employer—bronze, silver, gold, or platinum—is a required SHOP function established in the Exchange Establishment Rule (45 CFR 155.705(b)(2)) and discussed in greater detail in the preamble to the December 2012 HHS Notice of Benefit and Payment Parameters for 2014 proposed rule. In addition, the rules permit SHOPs to allow a qualified employer to choose one QHP for employees (§ 155.705(b)(3)). Because providing employees with a choice of QHPs at the same level of coverage would create no additional costs for an employer who would otherwise offer only one QHP to its employees, we proposed in the December 2012 HHS Notice of Benefit and Payment Parameters for 2014 proposed rule that qualified employers in FF–SHOPs would choose a level of coverage (bronze, silver, gold, or platinum) and a contribution, and employees would then choose any QHP at that level.

When we proposed this policy, we also sought comments on a transitional policy in which a FF–SHOP would allow or direct employers to offer to their employees a single QHP from those offered through the SHOP (77 FR 73184). A few commenters opposed offering the single QHP option, suggesting that each FF–SHOP should focus on providing employee choice. Most commenters on this issue, however, supported offering a single QHP option for employers, either as an additional option or as the only option in the initial years of the FF–SHOP. The commenters who supported providing a qualified employer only the option of offering a single QHP in the initial years of FF–SHOP operation cited several concerns, including the following: Whether issuers could meet the deadlines for submission of small group market QHPs given the new small group market rating rules; whether issuers could complete enrollment and accounting system changes required to interact with the SHOP enrollment and premium aggregation systems required by employee choice; and whether there would be adequate time to educate employers, employees, and brokers

[2] Patient Protection and Affordable Care Act; Establishment of Exchanges and Qualified Health Plans; Proposed Rule, 76 FR 41866 (July 15, 2011) (to be codified at 45 CFR parts 155 and 156).

[3] Patient Protection and Affordable Care Act; HHS Notice of Benefit and Payment Parameters for 2014; Proposed Rule, 77 FR 73118 (Dec. 7, 2012) (to be codified at 45 CFR parts 153, 155, 156, 157, and 158).

about the employer and employee choices available in the SHOP. The commenters stated that issuer efforts to prepare and price QHPs for an employee choice environment and to make the systems and operational changes required for SHOP enrollment and premium aggregation could compete with efforts to prepare for participation in the Exchange (both individual and SHOP).

Most of these comments supported allowing employers the option to offer only a single QHP in the FF–SHOP. Consequently, we concluded in the final HHS Notice of Benefit and Payment Parameters for 2014, published concurrently with this proposed rule, that the FF–SHOP would provide employers the choice of offering only a single QHP, as employers customarily do today, in addition to the choice of offering all QHPs at a single level of coverage.

We note that the comments in response to the draft Notice of Benefit and Payment Parameters for 2014 identified challenges to effective implementation of employee choice in the FF–SHOP in 2014; we also note that most of the comments also apply to implementation challenges in State-based SHOPs. In order to respond to these comments and to provide both State-based SHOPs and FF–SHOPs with greater flexibility, we therefore now propose to delay until 2015 implementation of the employee choice model as a requirement for all SHOPs. We also now propose that FF–SHOPs should assist qualified employers in offering qualified employees a single QHP choice for plan years beginning during calendar year 2014, which qualifies certain of these employers for the small business tax credit.

The Exchange Establishment Rule also included a premium aggregation function for the SHOP that was designed to assist employers whose employees were enrolled in multiple QHPs. Because this function will not be necessary in 2014 for SHOPs that delay implementation of the employee choice model, we have also proposed at § 155.705(b)(4) that the premium aggregation function be optional for plan years beginning before January 1, 2015.

Specifically, we are now proposing amendments to § 155.705(b)(2), (b)(3), and (b)(4) providing as follows: (1) The effective date of the employer choice requirements at § 155.705(b)(2) and the premium aggregation requirements at § 155.705(b)(4) for both State-based SHOPs and FF–SHOPs will be January 1, 2015; (2) State-based SHOPs could elect to offer employee choice and perform premium aggregation for plan years beginning before January 1, 2015, but need not do so; and (3) FF–SHOPs will begin to offer employee choice and premium aggregation in plan years beginning on or after January 1, 2015. We welcome further comment on this proposal.

b. Enrollment Periods Under SHOP (§ 155.725)

The Exchange Establishment Rule established special enrollment periods for Exchanges serving the individual market (§ 155.420), and the SHOP regulations adopted most of these provisions by reference (§ 155.725(a)(3)). Under these regulations, unless specifically stated otherwise in the regulations, a qualified individual has 60 days from the date of the triggering event to select a QHP (§ 155.420(c)).

This SHOP provision differs from the length of special enrollment periods in group markets provided by HIPAA, which last for 30 days after loss of eligibility for other private insurance coverage or after a person becomes a dependent through marriage, birth, adoption, or placement for adoption.[4] Because we believe that there is no rationale for providing a longer special enrollment period in a SHOP than is provided in the group market outside the SHOP, we propose amendments to § 155.725 to clarify that a qualified employee or dependent of a qualified employee who has obtained coverage through the SHOP would have 30 days from the date of most of the triggering events specified in § 155.420 to select a QHP. Additionally, consistent with revisions to HIPAA enacted by the Children's Health Insurance Program Reauthorization Act of 2009 (CHIPRA), Public Law 111–3, § 311 (Feb. 4, 2009), we propose that a qualified employee or dependent of a qualified employee who has become ineligible for Medicaid or CHIP or who has become eligible for state premium assistance under a Medicaid or CHIP program would be eligible for a special enrollment period in a SHOP and would have 60 days from the date of the triggering event to select a QHP. Specifically, we propose striking § 155.725(a)(3) and adding a new paragraph (j) consolidating the proposed SHOP special enrollment provisions in one paragraph. We propose a provision clarifying that a dependent of a qualified employee is only eligible for a special enrollment period if the employer offers coverage to dependents of qualified employees. We also propose paragraphs (j)(5) and (j)(6) that retain certain provisions relating to effective dates of coverage and loss of minimum essential coverage from the original § 155.420. We propose conforming revisions to § 156.285(b)(2), so that provision would reference the special enrollment periods in proposed § 155.725(j) instead of those set forth at § 155.420. We believe these changes appropriately align the SHOP provisions with provisions applicable to the rest of the group market, and welcome comment on the proposal.

[4] See 26 CFR 54.9801–6, 29 CFR 2590.701–6, and 45 CFR 146.117 for regulations regarding special enrollment periods under HIPAA.

IV. Collection of Information Requirements

This proposed rule, if finalized, would not impose new or alter existing information collection and recordkeeping requirements. Consequently, it need not be reviewed by the Office of Management and Budget under the authority of the Paperwork Reduction Act of 1995.

V. Response to Comments

Because of the large number of public comments we normally receive on **Federal Register** documents, we are not able to acknowledge or respond to them individually. We will consider all comments we receive by the date and time specified in the **DATES** section of this preamble, and, when we proceed with a subsequent document, we will respond to the comments in the preamble to that document.

VI. Regulatory Impact Analysis

We have examined the impact of this final rule as required by Executive Order 12866 on Regulatory Planning and Review (September 30, 1993) and Executive Order 13563 on Improving Regulation and Regulatory Review (January 18, 2011). Executive Orders 12866 and 13563 direct agencies to assess all costs and benefits of available regulatory alternatives and, if regulation is necessary, to select regulatory approaches that maximize net benefits (including potential economic, environmental, public health and safety effects, distributive impacts, and equity). A regulatory impact analysis (RIA) must be prepared for major rules with economically significant effects ($100 million or more in any one year). It is HHS's belief that this proposed rule does not reach this economic threshold and thus is not considered a major rule.

This proposed rule consists of a provision to amend the duration of certain special enrollment periods to correspond to the duration in group markets under HIPAA. The rule also proposes to add a triggering event that would create a special enrollment

period for qualified employees and/or their eligible dependents when an employee or qualified dependent with coverage through the SHOP becomes eligible for state premium assistance under Medicaid or CHIP or loses eligibility for Medicaid or CHIP. HIPAA, as revised by CHIPRA, already includes this triggering event, which was inadvertently omitted from the original list in § 155.420(d) because it applies only to group health plans and health insurance coverage in the group market. We do not believe either of these actions would impose any new costs on issuers, employers, enrollees, or the SHOP. In fact, the proposed amendment would create alignment of SHOP regulations with laws for the existing group market and could potentially create efficiencies for QHP issuers.

Finally, this proposed rule would require SHOPs to provide qualified employers the option to offer qualified employees a choice of any QHP at a single metal level starting with plan years beginning on or after January 1, 2015, instead of January 1, 2014. For plan years beginning in calendar year 2014, qualified employers would offer qualified employees coverage under a single QHP in FF–SHOPs; State-based SHOPs would have the flexibility to offer either employer or employee choice in 2014. In our analysis of the impact of employer and employee choices in the Notice of Benefit and Payment Parameters for 2014 final rule, published elsewhere in this issue of the **Federal Register**, we noted that adding the option for employers to offer a single QHP would have the potential effect of reducing adverse selection and any associated risk premium and a slight effect of decreasing the consumer benefit resulting from choice. We believe the same analysis applies to our proposal to provide employer choice in 2014.

Issuers will incur costs adapting their enrollment and financial systems to interact with a SHOPs enrollment and premium aggregation systems. The costs and benefits of Exchange and SHOP implementation were assessed in the RIA for the Exchange Establishment final rule, titled Patient Protection and Affordable Care Act; Establishment of Exchanges and Qualified Health Plans, Exchange Standards for Employers and Standards Related to Reinsurance, Risk Corridors and Risk Adjustment Regulatory Impact Analysis (Exchange RIA).[5] Because issuers may now have an additional year to develop these systems and may thus be able to stage their efforts rather than implementing all system changes by October 1, 2013, we believe that the total cost will be unchanged in total.

From the Exchange perspective, in the Exchange RIA, we noted that a State-based Exchange could incur costs in establishing a premium aggregation function for the SHOP. Therefore, the policy in this proposed rule could decrease costs to states that operate a State-based Exchange for the 2014 plan year.

VII. Regulatory Flexibility Act

The Regulatory Flexibility Act (5 U.S.C. 601 et seq.) (RFA) requires agencies to prepare an initial regulatory flexibility analysis to describe the impact of the proposed rule on small entities, unless the head of the agency can certify that the rule would not have a significant economic impact on a substantial number of small entities. The RFA generally defines a ''small entity'' as—(1) a proprietary firm meeting the size standards of the Small Business Administration (SBA); (2) a not-for-profit organization that is not dominant in its field; or (3) a small government jurisdiction with a population of less than 50,000. States and individuals are not included in the definition of ''small entity.'' HHS uses as its measure of significant economic impact on a substantial number of small entities a change in revenues of more than 3 percent.

The RFA requires agencies to analyze options for regulatory relief of small businesses, if a proposed rule has a significant impact on a substantial number of small entities. For purposes of the RFA, small entities include small businesses, nonprofit organizations, and small government jurisdictions. Small businesses are those with sizes below thresholds established by the SBA.

For the purposes of the regulatory flexibility analysis, we expect the following types of entities to be affected by this proposed rule—(1) small employers and (2) QHP issuers.

As discussed in Health Insurance Issuers Implementing Medical Loss Ratio (MLR) Requirements Under the Patient Protection and Affordable Care Act; Interim Final Rule,[6] few, if any, issuers are small enough to fall below the size thresholds for small business established by the SBA. In that rule, we used a data set created from 2009 National Association of Insurance Commissioners (NAIC) Health and Life Blank annual financial statement data to develop an updated estimate of the number of small entities that offer comprehensive major medical coverage in the individual and group markets. For purposes of that analysis, HHS used total Accident and Health earned premiums as a proxy for annual receipts. We estimated that there are 28 small entities with less than $7 million in accident and health earned premiums offering individual or group comprehensive major medical coverage.[7] However, this estimate may overstate the actual number of small health insurance issuers offering such coverage, since it does not include receipts from these companies' other lines of business. We further estimate that any issuers that would be considered small businesses are likely to be subsidiaries of larger issuers that are not small businesses.

The SHOP is limited by statute to employers with at least one but not more than 100 employees. For this reason, we expect that many employers would meet the SBA standard for small entities. We do not believe that this proposed regulation would impose requirements on employers offering coverage through the SHOP that are more restrictive than current requirements on employers offering employer-sponsored health insurance. Specifically, small employers are currently required to offer the special enrollment period that we propose would apply to eligible employees and dependents with coverage through the SHOP, and the triggering event that we propose currently applies to eligible individuals and dependents, as well. The proposed provision would merely apply existing standards to the SHOP. Additionally, the transitional policy regarding employee choice does not impose new requirements on small employers because most small employers currently offer only one health insurance plan to their employees.

Based on the foregoing, we are not preparing an analysis for the RFA

[5] Patient Protection and Affordable Care Act; Establishment of Exchanges and Qualified Health Plans, Exchange Standards for Employers and Standards Related to Reinsurance, Risk Corridors and Risk Adjustment Regulatory Impact Analysis, March 2012. Available at: *http://cciio.cms.gov/resources/files/Files2/03162012/hie3r-ria-032012.pdf.*

[6] Health Insurance Issuers Implementing Medical Loss Ratio (MLR) Requirements Under the Patient Protection and Affordable Care Act; Interim Final Rule, 75 FR 74864, 74918–20 (Dec. 1, 2010) (to be codified at 45 CFR part 158).

[7] According to SBA size standards, entities with average annual receipts of $7 million or less would be considered small entities for North American Industry Classification System (NAICS) Code 524114 (Direct Health and Medical Insurance Carriers). For more information, see ''Table of Size Standards Matched To North American Industry Classification System Codes,'' effective March 26, 2012, U.S. Small Business Administration, available at *http://www.sba.gov.*

because we have determined, and the Secretary certifies, that this proposed rule would not have a significant economic impact on a substantial number of small entities.

VIII. Unfunded Mandates

Section 202 of the Unfunded Mandates Reform Act of 1995 (UMRA) requires that agencies assess anticipated costs and benefits and take certain other actions before issuing a proposed rule (and subsequent final rule) that includes any federal mandate that may result in expenditures in any one year by a state, local, or tribal governments, in the aggregate, or by the private sector, of $100 million in 1995 dollars, updated annually for inflation. In 2012, that threshold is approximately $139 million. UMRA does not address the total cost of a rule. Rather, it focuses on certain categories of costs, mainly those ''federal mandate'' costs resulting from: (1) Imposing enforceable duties on state, local, or tribal governments, or on the private sector; or (2) increasing the stringency of conditions in, or decreasing the funding of, state, local, or tribal governments under entitlement programs.

This proposed rule does not place any financial mandates on state, local, or tribal governments. It proposes the application of a triggering event and special enrollment period to coverage through the SHOP, modification of the duration of certain special enrollment periods, and implementation of employee choice in the SHOP starting with plan years on or after January 1, 2015. These proposed amendments would only affect state governments to the extent that they operate a SHOP and, if they are affected, would not place any new financial mandates on them.

IX. Federalism

Executive Order 13132 establishes certain requirements that an agency must meet when it promulgates a proposed rule (and subsequent final rule) that imposes substantial direct costs on state and local governments, preempts state law, or otherwise has Federalism implications. This proposed regulation does not impose any costs on state or local governments.

In compliance with the requirement of Executive Order 13132 that agencies examine closely any policies that may have Federalism implications or limit the policy making discretion of the states, HHS has engaged in efforts to consult with and work cooperatively with affected states, including participating in conference calls with and attending conferences of the National Association of Insurance Commissioners (NAIC), and consulting with State insurance officials on an individual basis. We believe that this proposed rule does not impose substantial direct costs on state and local governments, preempt state law, or otherwise have federalism implications. We note that we have attempted to provide states that choose to operate a SHOP with flexibility such that states may, if they choose, offer employee choice beginning with plan years starting on or after January 1, 2014, or they may delay this implementation until plan years starting on or after January 1, 2015.

Pursuant to the requirements set forth in section 8(a) of Executive Order 13132, and by the signatures affixed to this regulation, the Department of Health and Human Services certifies that CMS has complied with the requirements of Executive Order 13132 for the attached proposed regulation in a meaningful and timely manner.

List of Subjects

45 CFR Part 155

Administrative practice and procedure, Advertising, Advisory Committees, Brokers, Conflict of interest, Consumer protection, Grant programs-health, Grants administration, Health care, Health insurance, Health maintenance organization (HMO), Health records, Hospitals, American Indian/Alaska Natives, Individuals with disabilities, Loan programs-health, Organization and functions (Government agencies), Medicaid, Public assistance programs, Reporting and recordkeeping requirements, State and local governments, Sunshine Act, Technical assistance, Women, and Youth.

45 CFR Part 156

Administrative practice and procedure, Advertising, Advisory Committees, Brokers, Conflict of interest, Consumer protection, Grant programs-health, Grants administration, Health care, Health insurance, Health maintenance organization (HMO), Health records, Hospitals, Indians, Individuals with disabilities, Loan programs-health, Organization and functions (Government agencies), Medicaid, Public assistance programs, Reporting and recordkeeping requirements, Safety, State and local governments, Sunshine Act, Technical assistance, Women, and Youth

For the reasons set forth in the preamble, the Department of Health and Human Services proposes to amend 45 CFR parts 155 and 156 as set forth below:

PART 155—EXCHANGE ESTABLISHMENT STANDARDS AND OTHER RELATED STANDARDS UNDER THE AFFORDABLE CARE ACT

■ 1. The authority citation for part 155 continues to read as follows:

Authority: Title I of the Affordable Care Act, sections 1301, 1302, 1303, 1304, 1311, 1312, 1313, 1321, 1322, 1331, 1334, 1402, 1411, 1412, 1413.

■ 2. Section 155.705 is amended by revising paragraphs (b)(2), (b)(3), and (b)(4) to read as follows:

§ 155.705 Functions of a SHOP.

* * * * *

(b) * * *

(2) *Employer choice requirements.* With regard to QHPs offered through the SHOP for plan years beginning on or after January 1, 2015, the SHOP must allow a qualified employer to select a level of coverage as described in section 1302(d)(1) of the Affordable Care Act, in which all QHPs within that level are made available to the qualified employees of the employer.

(3) *SHOP options with respect to employer choice requirements.* (i) For plan years beginning before January 1, 2015, a SHOP may allow a qualified employer to make one or more QHPs available to qualified employees:

(A) By the method described in paragraph (b)(2) of this section, or

(B) By a method other than the method described in paragraph (b)(2) of this section.

(ii) For plan years beginning on or after January 1, 2015, a SHOP:

(A) Must allow an employer to make available to qualified employees all QHPs at the level of coverage selected by the employer as described in paragraph (b)(2) of this section, and

(B) May allow an employer to make one or more QHPs available to qualified employees by a method other than the method described in paragraph (b)(2) of this section.

(iii) For plan years beginning before January 1, 2015, a Federally-facilitated SHOP will only provide a qualified employer the choice to make available to qualified employees a single QHP.

(iv) For plan years beginning on or after January 1, 2015, a Federally-facilitated SHOP will provide a qualified employer a choice of two methods to make QHPs available to qualified employees:

(A) The employer may choose a level of coverage as described in paragraph (b)(2) of this section, or

(B) The employer may choose a single QHP.

(4)(i) *Premium aggregation.* Consistent with the effective dates set forth in

paragraph (b)(4)(ii)of this section, the SHOP must perform the following functions related to premium payment administration:

(A) Provide each qualified employer with a bill on a monthly basis that identifies the employer contribution, the employee contribution, and the total amount that is due to the QHP issuers from the qualified employer;

(B) Collect from each employer the total amount due and make payments to QHP issuers in the SHOP for all enrollees; and

(C) Maintain books, records, documents, and other evidence of accounting procedures and practices of the premium aggregation program for each benefit year for at least 10 years.

(ii) Effective dates.

(A) A State-based SHOP may elect to perform these functions for plan years beginning before January 1, 2015, but need not do so.

(B) A Federally-facilitated SHOP will perform these functions only in plan years beginning on or after January 1, 2015.

* * * * *

■ 3. Section 155.725 is amended by removing paragraph (a)(3), and adding paragraph (j) to read as follows:

§ 155.725 Enrollment periods under SHOP.

* * * * *

(j)(1) *Special enrollment periods.* The SHOP must provide special enrollment periods consistent with this section, during which certain qualified employees or a dependent of a qualified employee may enroll in QHPs and enrollees may change QHPs.

(2) The SHOP must provide a special enrollment period for a qualified employee or dependent of a qualified employee who:

(i) Experiences an event described in § 155.420 (d)(1), (2), (4), (5), (7), (8), or (9);

(ii) Loses eligibility for coverage under a Medicaid plan under title XIX of the Social Security Act or a state child health plan under title XXI of the Social Security Act; or

(iii) Becomes eligible for assistance, with respect to coverage under a SHOP, under such Medicaid plan or a state child health plan (including any waiver or demonstration project conducted under or in relation to such a plan).

(3) A qualified employee or dependent of a qualified employee who experiences a qualifying event described in paragraph (j)(2) of this section has:

(i) 30 days from the date of a triggering event described in paragraph (j)(2)(i) of this section to select a QHP through the SHOP; and

(ii) 60 days from the date of a triggering event described in paragraph (j)(2)(ii) of this section or (iii) of this section to select a QHP through the SHOP;

(4) A dependent of a qualified employee is not eligible for a special election period if the employer does not extend the offer of coverage to dependents.

(5) The effective dates of coverage are determined using the provisions of § 155.420(b).

(6) Loss of minimum essential coverage is determined using the provisions of § 155.420(e).

PART 156—HEALTH INSURANCE ISSUER STANDARDS UNDER THE AFFORDABLE CARE ACT, INCLUDING STANDARDS RELATED TO EXCHANGES

■ 4. The authority citation for part 156 continues to read as follows:

Authority: Title I of the Affordable Care Act, sections 1301–1304, 1311–1312, 1321, 1322, 1324, 1334, 1341–1343, and 1401–1402, Pub l. 111–148, 124 Stat. 119 (42 U.S.C. 18042).

■ 5. Section 156.285 is amended by revising paragraph (b)(2) to read as follows:

§ 156.285 Additional standards specific to SHOP.

* * * * *

(b) * * *

(2) Provide special enrollment periods as described in § 155.725(j).

* * * * *

Dated: February 25, 2013.

Marilyn Tavenner,

Acting Administrator, Centers for Medicare & Medicaid Services.

Approved: February 27, 2013.

Kathleen Sebelius,

Secretary, Department of Health and Human Services.

[FR Doc. 2013–04952 Filed 3–1–13; 11:15 am]

BILLING CODE 4120–01–P

FEDERAL REGISTER

Vol. 78 Monday,

No. 47 March 11, 2013

Part III

Office of Personnel Management

45 CFR Part 800

Patient Protection and Affordable Care Act; Establishment of the Multi-State Plan Program for the Affordable Insurance Exchanges; Final Rule

OFFICE OF PERSONNEL MANAGEMENT

45 CFR Part 800

RIN 3206–AM47

Patient Protection and Affordable Care Act; Establishment of the Multi-State Plan Program for the Affordable Insurance Exchanges

AGENCY: U.S. Office of Personnel Management.

ACTION: Final rule.

SUMMARY: The U.S. Office of Personnel Management (OPM) is issuing a final regulation establishing the Multi-State Plan Program (MSPP) pursuant to the Patient Protection and Affordable Care Act, as amended by the Health Care and Education Reconciliation Act of 2010, referred to collectively as the Affordable Care Act. Through contracts with OPM, health insurance issuers will offer at least two multi-State plans (MSPs) on each of the Affordable Insurance Exchanges (Exchanges). One of the issuers must be non-profit. Under the law, an MSPP issuer may phase in the States in which it offers coverage over 4 years, but it must offer MSPs on Exchanges in all States and the District of Columbia by the fourth year in which the MSPP issuer participates in the MSPP. This rule aims to balance adhering to the statutory goals of MSPP while aligning its standards to those applying to qualified health plans to promote a level playing field across health plans.

DATES: Effective May 10, 2013, except for § 800.503. OPM will publish a document announcing the effective date of § 800.503 in the **Federal Register**.

Note: Section 2719 of the Public Health Service Act and its implementing regulations apply to all non-grandfathered group health plans and health insurance issuers, including MSPP issuers, with respect to internal claims and appeals and external review. Because rulemaking implementing section 2719 has not yet been completed, the provisions of this regulation relating to external review (§ 800.503) will take effect on the effective date of those regulations.

FOR FURTHER INFORMATION CONTACT: Julia Elam by telephone at (202) 606–2128, by FAX at (202) 606–0033, or by email at *mspp@opm.gov.*

SUPPLEMENTARY INFORMATION: The Patient Protection and Affordable Care Act (Pub. L. 111–148), as amended by the Health Care and Education Reconciliation Act of 2010 (Pub. L. 111–152), together known as the Affordable Care Act, provides for the establishment of Health Insurance Marketplaces, or Exchanges, in each State, where individuals and small businesses can purchase qualified coverage. The Exchanges will provide competitive marketplaces for individuals and small employers to directly compare available private health insurance options on the basis of price, quality, and other factors. The Exchanges will enhance competition in the health insurance market, improve choice of affordable health insurance, and give individuals and small businesses purchasing power comparable to that of large businesses. The U.S. Office of Personnel Management is issuing this final regulation to implement section 1334 of the Affordable Care Act by establishing the Multi-State Plan Program, as described below.

Abbreviations

FEHBA Federal Employees Health Benefits Act (5 U.S.C. 8901 *et seq.*)
FEHBP Federal Employees Health Benefits Program
HHS U.S. Department of Health and Human Services
HMO Health Maintenance Organization
I/T/Us Indian Health Service, tribes and tribal organizations, and urban Indian organizations
MSP Multi-State Plan
MSPP Multi-State Plan Program
NAIC National Association of Insurance Commissioners
OPM U.S. Office of Personnel Management
PHS Act Public Health Service Act
QHP Qualified Health Plan
SHOP Small Business Health Options Program

Pursuant to its responsibilities under the Affordable Care Act, the U.S. Department of Health and Human Services (HHS) issued regulations outlining standards to certify Exchanges and qualified health plans (QHPs) that will be offered on Exchanges. If a State does not elect to operate an Exchange or is not certified (or conditionally approved) to operate one, HHS will operate the Exchange in that State.

Section 1334 of the Affordable Care Act directs the U.S. Office of Personnel Management (OPM) to establish the Multi-State Plan Program (MSPP) to foster competition among plans competing in the individual and small group health insurance markets on the Exchanges. Specifically, section 1334 directs OPM to contract with private health insurance issuers (one of which must be non-profit) to offer at least two multi-State plans (MSPs) on each of the Exchanges in each State. The law allows MSPP issuers to phase in coverage, but coverage must be offered on Exchanges in all States and the District of Columbia by the fourth year in which the MSPP issuer participates in the MSPP. The first open enrollment period for plans offered through Exchanges will begin on October 1, 2013, for coverage starting January 1, 2014.

The purpose of this regulation is to outline the process by which OPM will establish and administer the MSPP, as well as to establish standards and requirements for MSPs and MSPP issuers.

Summary of Comments

On December 5, 2012, OPM published proposed regulations (77 FR 72582) establishing the MSPP at part 800 of title 45, Code of Federal Regulations. The comment period for the proposed rule closed on January 4, 2013. OPM received about 350 comments from a wide variety of entities and individuals. A summary of the comments we received follows, along with our responses to the comments and changes we are making to the proposed regulations in light of the comments. In addition, we are making some minor technical and editorial changes to the proposed regulations to correct errors and improve clarity and readability.

Responses to Overarching Comments

Of the approximately 350 comments we received on the proposed rule, about 105 were unique comment letters. Many of the others were form letters, including letters requesting an extension of the comment period.

A broad range of stakeholders commented on the proposed regulation, including 14 States and the National Association of Insurance Commissioners (NAIC). We also received comments from about a dozen health insurance issuers, group health plans, and their associations. Most of the remaining comments came from health care providers, pharmaceutical companies, business groups, labor unions, and consumer groups.

Length of the Comment Period

We received many comments about the 30-day comment period and whether we would extend it. Some commenters contended that the 30-day comment period did not provide sufficient time to provide feedback.

Our comment period is consistent with the Administrative Procedure Act and Executive Orders 12866 and 13563. OPM values the participation of a broad array of diverse stakeholders, and we have succeeded in obtaining that participation, as evidenced by the volume of comments as well as the diversity of viewpoints offered in response to our proposed regulation. Moreover, OPM has provided several other opportunities for public input on policies relating to the MSPP. On June

16, 2011, OPM issued a Request for Information (RFI) to solicit feedback from stakeholders about the program. On September 21, 2012, OPM issued a draft MSPP application and received public comments over a 30-day period. OPM has also held meetings and phone calls with numerous stakeholders to seek input and guidance, including from the NAIC, States, tribal governments, consumer advocates, health insurance issuers, labor organizations, provider associations, and trade groups.

Church Plans

One commenter urged OPM to consider entering into an MSPP contract with a church plan. The commenter explained that church plans are defined in various sections of the law, including section 414(e) of the Internal Revenue Code and section 3(33) of the Employee Retirement Income Security Act (ERISA). A church plan does not, by itself, meet the definition of health insurance issuer in section 2791(b)(2) of the PHS Act; in addition, enrollment is limited to church employees and members of the clergy. The commenter interpreted section 1334 of the Affordable Care Act as allowing OPM to contract with church plans to offer coverage through the MSPP. First, the commenter stated that, while section 1334(a)(1) provides that the Director shall enter into contracts for MSPs with health insurance issuers, it does not expressly preclude OPM from entering into contracts with entities other than issuers. The commenter asserted that church plans should be considered eligible to contract for an MSP because OPM can treat a church plan as equivalent to an issuer under the Church Parity and Entanglement Protections Act, Public Law 106–244 (''Parity Act''). The commenter recommended that OPM could exercise its discretion to exempt church plans from a number of requirements for MSPs, including permitting a church plan MSP to limit enrollment to members of the clergy and church employees.

We disagree with the commenter's interpretation of section 1334 and do not believe that a church plan meets the requirements necessary for OPM to offer such a plan under an MSPP contract. Section 1334(a)(1) explicitly requires OPM to enter into contracts for MSPs with ''health insurance issuers,'' and we do not agree that the statute authorizes OPM to enter into contracts with entities other than health insurance issuers. Because church plans, by themselves, do not meet the definition of health insurance issuers as described above, OPM does not have the authority to contract for them under § 1334.

Responses to Comments on the Regulations

Subpart A—General Provisions and Definitions

Basis and Scope (§ 800.10)

OPM proposed this section to define the basis and scope of part 800, which establishes the primary authority for the establishment of the MSPP under the Affordable Care Act. Other relevant statutory provisions MSPP issuers and MSPs must comply with include all provisions of part A of title XXVII of the Public Health Service (PHS) Act. Section 800.10 also sets forth the scope of this regulation, which establishes standards for health insurance issuers wishing to contract with OPM to participate in the MSPP and for the appeals processes for both MSPP issuers and enrollees.

We received no comments on § 800.10 as proposed. Accordingly, we are adopting it as final, with no changes.

Definitions (§ 800.20)

In § 800.20, OPM proposed definitions for terms that are used throughout part 800. In general, the definitions contained in § 800.20 come from the following sources: title I of the Affordable Care Act and the final Exchange regulation at 45 CFR parts 155, 156, and 157; title XXVII of the PHS Act and the regulations at 45 CFR part 144; and the Federal Employees Health Benefits Act (FEHBA) at chapter 89 of title 5, United States Code, and the regulations governing the Federal Employees Health Benefits Program (FEHBP) at 5 CFR part 890 and 48 CFR 1609.70. Some new definitions were created for the purpose of implementing the MSPP. The application of the terms defined in this section is limited to this final rule.

OPM proposes definitions for several terms based on three HHS regulations. First, HHS published an Essential Health Benefits (EHB) final rule in the **Federal Register** on February 25, 2013, to provide standards related to EHB, actuarial value (AV), and accreditation. Second, HHS published a final rule in the **Federal Register** on February 27, 2013, to provide standards related to fair health insurance premiums, guaranteed availability, guaranteed renewability, risk pools, and rate review (the health insurance market rules). Third, HHS published a final rule elsewhere in today's edition of the **Federal Register**, to provide notice of standards relating to benefit and payment parameters for 2014, including standards related to advance payments of the premium tax credit and cost-sharing reductions (the payment rule). OPM is using the definitions promulgated by HHS.

Comments: OPM received several comments recommending changes in the definitions in proposed § 800.20. A few commenters expressed concern with how OPM plans to operationalize the definition of ''Indian.'' Specifically, the commenters suggested that OPM adopt the definition at 42 CFR 447.50 and not use the definition at 45 CFR 155.300(a) as we proposed. OPM was also asked to correct the definition of ''Indian Plan Variation,'' which currently cross references 45 CFR 156.400, so that there is no confusion regarding eligibility of Indians for zero-cost-sharing and variable cost-sharing plan variations.

Response: While the terms ''Indian'' and ''Indian Plan Variation'' were introduced in the proposed rule, referencing 45 CFR 155.300(a) and 45 CFR 155.400, respectively, we are removing them from the final rule, as they are not used elsewhere in the rule.

Comments: A few commenters noted that OPM should not exclude policies and contracts from the ''benefit plan material or information'' definition. Two commenters said that we should not exclude policies and contracts from the definition, because including them in the scope of the regulation could be helpful to limited-English-proficient (LEP) individuals in making effective decisions.

One commenter wanted us to clarify that a provider directory falls within the definition of ''benefit plan material or information.''

Response: We are adopting the proposed definition of ''benefit plan material or information.'' The term, as defined, includes explanations or descriptions, whether printed or electronic, that describe a health insurance issuer's products. The term does not include a policy or contract for health insurance coverage. As it does in the FEHBP, OPM will review and approve the policy or contract for health insurance coverage. Such approval is necessary for effective contract administration and oversight. We agree that a provider directory does fall within the scope of the definition.

Comment: One commenter suggested that introducing a second prong to the definition of ''group of issuers''—to include ''an affiliation of health insurance issuers and an entity who is not an issuer but who owns a nationally licensed service mark''—would expand the authority granted under section 1334 of the Affordable Care Act. The commenter recommended that we not

expand the definition of ''group of issuers'' to include entities not identified in the Affordable Care Act as potential participants in the MSPP.

Response: Section 1334 does not define ''group of issuers,'' but only provides examples of affiliations of health insurance issuers that may be considered health insurance issuers. Thus, OPM, in the exercise of its discretion, and within the parameters set by section 1334, has established a definition that we believe affords flexibility in terms of the types of entities with which OPM may contract. In addition, this definition, which attempts to encompass a diversity of contractual arrangements similarly available to OPM under the FEHBP, promotes the goals of section 1334(a) of the Affordable Care Act, which directs OPM to implement the MSPP in a manner similar to the manner in which we implement the contracting provisions with respect to carriers under the FEHBP. As we noted in the proposed rule, this definition of ''group of issuers'' is applicable only for the purposes of section 1334.

Comment: One commenter recommended that OPM revise the definition of ''non-profit entity'' to exclude the portion of the definition that states a non-profit entity may also be, for purposes of the MSPP, ''a group of health insurance issuers licensed under State law a substantial portion of which are incorporated under State law as non-profit entities,'' as this would further reduce competition in a State where a ''for-profit'' issuer may already have a significant market share.

Response: We are adopting the proposed definition of ''non-profit entity.'' This definition is consistent with the manner in which OPM implements the contracting provisions with respect to carriers under the FEHBP and builds on our significant experience in contracting with and overseeing carriers under that program.

Comment: Another commenter recommended amending the definitions of ''multi-State plan (MSP)'' and ''Multi-State Plan Program issuer (MSPP issuer)'' to clarify whether each MSP will be under separate contract with OPM or will contract through the MSPP issuer.

Response: OPM is revising the definition of ''MSP'' to clarify that an MSP is offered under contract with OPM via an MSPP issuer.

Comment: A commenter suggested that OPM broaden the definition of ''State Insurance Commissioner'' to acknowledge the potential for multiple regulatory roles in a State.

Response: We understand the commenter's concern and acknowledge the possibility of multiple regulatory roles in some States, but we are retaining the proposed definition. This term is a standard term that is understood in the industry; therefore, we decline to amend the definition. Our definition of ''State Insurance Commissioner'' aligns with the definition used in many of the model acts issued by the National Association of Insurance Commissioners (NAIC) to ensure consistency with definitions widely used by State insurance regulatory entities.

Subpart B—Multi-State Plan Program Issuer Requirements

General Requirements (§ 800.101)

Section 800.101 of the proposed rule sets forth standards to implement § 1334(b) of the Affordable Care Act. The general requirements include licensure, a contract with OPM, required levels of coverage, eligibility and enrollment, compliance with OPM direction and other legal requirements. In § 800.101(i), we also proposed that an MSPP issuer must comply with applicable non-discrimination statutes and ensure that their MSPs do not discriminate based on race, color, national origin, disability, age, sex, gender identity, or sexual orientation. We sought comment on any unique enrollment and eligibility issues that might affect MSPs. A broad spectrum of consumer and professional organizations commented on this provision.

Comments: Many commenters support OPM's intent to include non-discrimination provisions, but recommended adding specific additional language to strengthen these protections, including clarifying non-discrimination based on sex or gender identity.

Some commenters requested that OPM add specific non-discrimination language in § 800.101(d) that describes the MSP and MSPP issuer responsibilities for eligibility and enrollment. The specific suggestion was to notify MSPP issuers that benefit packages must be ''substantially equal'' to EHB benchmarks and not include any discriminatory benefit design elements as defined under 45 CFR 156.125.

Response: In response to comments, we are revising § 800.101(i) of this final rule to ensure consistency with the prohibition on discrimination with respect to EHB in 45 CFR 156.125 and the non-discrimination standards applicable to QHPs under 45 CFR 156.200(e). With regard to defining EHB benchmarks, we have determined that these comments are outside the scope of this rule. These standards are governed by HHS regulations.

Comments: Some commenters suggested that certain health care providers be included as protected categories for non-discrimination, and one commenter wanted MSPP issuers and MSPs to align their payment systems to comply with State and Federal non-discrimination provisions.

Response: The broad prohibition on discrimination in § 800.101(i) clearly bars discrimination against certain health care providers of the MSPP issuer. Similar comments were addressed in § 800.109, concerning health providers and network adequacy. We are concerned that specifying types of providers who are protected from discrimination would detract from the larger issue of broadly ensuring access to the full range of covered services. Accordingly, no further change in proposed § 800.101(i) is needed to address this concern.

Comments: A few commenters recommended that OPM expressly clarify in § 800.101(i) that the Indian Health Service, tribes and tribal organizations, and urban Indian organizations (collectively, I/T/Us) are not violating the non-discrimination requirements if they limit their services, in whole or part, to American Indians/Alaska Natives.

Response: An MSPP issuer would not violate the non-discrimination requirements by contracting with health care providers who are authorized or directed by law to serve specific populations, such as Indian health providers. We note that an MSPP issuer must meet all standards related to network adequacy and essential community providers specified in § 800.109 and 45 CFR 156.235, respectively.

Comments: A few commenters stated that OPM should clarify that MSPs and MSPP issuers must comply with any consumer protections and regulatory procedures a State or Exchange has put in place.

Response: As explained in our proposed regulation, MSPs and MSPP issuers are generally required to comply with applicable State law. This would include the application of stronger protections in the Exchange provided by State law, as long as application of those provisions to the MSPP is consistent with the Affordable Care Act. We received no comments to indicate that the consumer protections applicable to the MSPP are any weaker than those required by any State or Exchange. On the contrary, OPM intends to protect

consumers through its administration of the MSPP in a manner similar to the manner in which it has protected enrollees in the FEHBP for more than 50 years. In any event, if there are specific consumer protections and regulatory procedures that go above and beyond Federal standards, OPM encourages States to identify them so OPM can consider and address them through a memorandum of understanding (MOU) with the State and, if appropriate, in its contracts with issuers.

Comments: A few commenters asked how OPM will work with active purchasing Exchanges and recommended that OPM incorporate a ''do no harm'' objective in the preamble.

Response: We will retain our current language and decline to incorporate a ''do no harm'' provision, as such a provision would be vague and ambiguous. Instead, we will maintain our approach of applying standards that neither competitively advantage nor disadvantage MSPs and MSPP issuers.

Comment: One commenter stated that OPM should require MSPP issuers to meet standards for certification and licensing prior to signing a contract with OPM for MSPs in the State.

Response: Section 800.101 clearly provides that an MSPP issuer must be licensed as a health insurance issuer in each State where it offers health insurance coverage, and it is deemed certified by OPM when it signs a contract with OPM.

Compliance With Federal law (§ 800.102)

Proposed § 800.102 specifies the Federal laws with which MSPP issuers must comply as a condition of participation in the MSPP. Paragraph (a) refers to applicable provisions of title XXVII of the PHS Act, while paragraph (b) refers to applicable provisions of title I of the Affordable Care Act.

In this final rule, paragraphs (a) and (b) no longer refer to Appendix A and B, respectively, which in the proposed rule listed specific provisions of title XXVII of the PHS Act and title I of the Affordable Care Act. We are omitting these appendices because, although the statutes listed in those appendices do apply to MSPP issuers, they may not necessarily be a comprehensive list of all applicable statutes. Also, it is possible that the list of statutes in the appendices may change over time.

We are also omitting Appendix C in this final rule, because § 36B of the Internal Revenue Code does not set forth responsibilities of issuers.

Comments: Commenters suggested that OPM had erroneously neglected to include section 2716 of the PHS Act and section 1312 of the Affordable Care Act.

Response: MSPP issuers that choose to participate in the Small Business Health Options Program (SHOP) will operate under the same rules as issuers of health insurance coverage in the small group market generally. OPM agrees that section 1312 of the Affordable Care Act applies to MSPP issuers.

Comments: A few commenters noted that we listed section 2707 of the PHS Act in Appendix A to the proposed rule, which listed PHS Act provisions applicable to MSPs, and asked OPM to clarify that the PHS Act requirements were applicable solely to the off-Exchange markets and would not apply to MSPP issuers for products sold through an Exchange.

Response: While all the requirements applicable to QHP issuers contained in section 2707 are also contained in requirements applicable to QHPs, they also apply directly.

Authority To Contract With Issuers (§ 800.103)

As provided in section 1334(a)(1) of the Affordable Care Act, OPM proposed in § 800.103 that it may enter into an MSPP contract with a group of issuers affiliated either by common ownership and control or by the use of a nationally licensed service mark, or an affiliation of health insurance issuers and an entity that is not an issuer but that owns a nationally licensed service mark.

We received no substantive comments on this section. Accordingly, we are adopting proposed § 800.103 as final, with no changes.

Phased Expansion (§ 800.104)

In § 800.104, we proposed phased expansion of the MSPP into States and that MSPP issuers may provide partial coverage within a State. We also proposed that MSPP issuers must be licensed in the State where they offer coverage and OPM may enter into a contract with an issuer that is not licensed in all States. We stated in the preamble of the proposed regulation that § 800.104 implements provisions of section 1334(e) of the Affordable Care Act regarding the phase-in of multi-State plans. OPM proposed in § 800.104(b) that MSPP issuers offering MSPs can offer coverage in part of a State, and do not have to offer coverage throughout the entire State. We also solicited comment on whether an MSPP issuer should be required to offer coverage statewide by the fourth year of participation in the MSPP, when coverage must be offered in each Exchange in all States and the District of Columbia.

Comments: Several commenters expressed support for phased expansion into States. Another commenter stated that a multi-year phase-in process will allow MSPs to build appropriate networks and partnerships to satisfy the requirements of the Affordable Care Act and satisfy the needs of the citizens of each State. One commenter stated that MSPP issuers should be required to offer coverage on each Exchange in all States and the District of Columbia as soon as possible or in as many States as possible. Another commenter recommended an extension of the phase-in period to 6 years instead of a 4-year phase-in.

Response: We are retaining the standards that are outlined in section 1334(e) of the Affordable Care Act. However, we have removed from the regulatory text the number of States that an issuer must phase into because section 1334(e) refers to percentages and not specific numbers. We believe the phased expansion approach into States will encourage MSPP issuers to expand MSPs to provide more consumer choice throughout the country. It is our intention to ensure that MSPP issuers have appropriate networks to adequately serve MSP enrollees, and we will take these comments into consideration when we are evaluating potential MSPP issuers.

Comment: One commenter was concerned that MSPP issuers will subcontract to meet the phase-in requirements and that these will encourage ''marriages of convenience.''

Response: Section 1334 permits OPM to contract with health insurance issuers and entities that come together in order to apply as an MSP issuer. We encourage any such new entities to give careful thought and planning to their strategies for phasing in coverage to the States and the District of Columbia, and we will ensure through our application review and contracting process that these entities are prepared to offer quality health insurance options in the States for which they are applying.

Comment: One commenter recommended that OPM should require licensure in all jurisdictions by the end of the phase-in.

Response: We have adequately addressed the licensure requirement in § 800.104(c). As stated in that section, OPM may enter into a contract with an MSPP issuer that is not licensed in every State, provided that the issuer is licensed in every State where it offers MSP coverage through any Exchanges in that State and demonstrates to OPM that it is making a good-faith effort to

become licensed in every State, consistent with the timeframe for the phase-in.

Comments: We received many comments on whether OPM should have a role in selecting the States in which MSPP issuers should or should not offer coverage during phased expansion. Several commenters recommended that OPM not specify which States an MSPP issuer must cover in the first year. Other commenters recommended that OPM should consider slow-tracking implementation of the MSPP in certain States and granting these States waivers from participation. Another commenter suggested that OPM limit MSPP issuers to offering MSPs in States that will have Federally-facilitated Exchanges or State Partnership Exchanges in 2014. One commenter suggested that OPM focus the phase-in on States where consumers lack viable coverage options.

Response: OPM declines to identify specific States that MSPP issuers should cover during phased expansion. We recognize the importance of providing consumers with more health insurance coverage options and, while we will not choose specific States where MSPP issuers must provide coverage during the phase-in, we will use our oversight and contract negotiation roles to provide consumers with the additional choice of two high-quality health insurance plans and promote competition on the Exchanges.

Comments: One commenter supported OPM's proposal that OPM may enter into contracts with issuers that cannot provide statewide coverage and stated that it will give MSPP issuers time to develop the capacity to offer coverage throughout a service area, which will enhance competition in the MSPP. Several commenters appreciated that issuers failing to offer statewide coverage must propose a plan for becoming statewide, but expressed that without more specificity American Indians/Alaska Natives will not be able to access MSPs.

Response: We acknowledge the importance of access to health coverage and MSPs, especially in rural and underserved areas. However, we are providing in the final regulation that OPM may enter into a contract with an MSPP issuer that will provide partial coverage within a State. We recognize the challenges that issuers would face if there were a requirement to offer coverage statewide, and we were made aware of these challenges from issuers in the MSPP Request for Information as well as comments on the proposed rule. However, we are maintaining in the final rule our proposed requirement for MSPP issuers who are offering partial coverage in a State to supply a plan for offering coverage throughout the State. As we review MSPP issuer applications, we will pay special attention to service areas that are medically underserved, such as rural areas and American Indian/Alaska Native populations. We intend to encourage issuers to offer coverage statewide where they have capacity to do so, and will take these comments into consideration when negotiating MSPP contracts.

Comments: Several commenters wanted clarification of phased expansion in terms of MSPs being able to meet network adequacy standards. One commenter recommended that MSPP issuers not be permitted to offer MSPs in a State unless the plan is capable of offering coverage to all residents of a State, including meeting network adequacy standards throughout the State, to avoid selective coverage by issuers.

Response: While we appreciate the concern for network adequacy, we decline to set a standard of phased expansion and statewide coverage in terms of network adequacy. We believe that network adequacy is sufficiently addressed in § 800.109 to ensure that an MSP's services are available to all enrollees.

Comments: Many commenters were concerned by our proposal to allow partial coverage within a State. Some stated that MSPP issuers should be required to comply with all State requirements regarding geographic scope of coverage that apply to QHPs. One commenter recommended that MSPs follow specific State standards for statewideness. Some commenters stated that, without a requirement of statewideness, there is a possibility of red-lining by MSPP issuers or adverse selection resulting in MSPP issuers avoiding certain populations. Commenters were also concerned about market dislocation. One commenter stated that MSPP issuers would be able to avoid offering coverage in rural and other high-cost areas, which would give them a competitive advantage over both QHP issuers and issuers not offering on an Exchange. Lastly, one commenter stated that a core purpose of the MSPP is to benefit individuals who lack options, and allowing issuers to avoid certain difficult areas in a State contradicts this basic purpose. One commenter suggested that we include language indicating that we will consult with State regulators and the State Exchange in determining that MSP coverage does not exclude specific high-utilizing, high-cost, or medically-underserved populations.

Response: We are not prohibiting MSPP issuers from being statewide; on the contrary, we encourage them to do so from the start if they have the capacity. MSPP issuers should follow State laws regarding statewideness to the extent it is within their capability to do so. In addition, we are finalizing this regulation with the requirement for an MSPP issuer to provide a plan for expanding coverage statewide. Furthermore, we intend to address an MSPP issuer's ability to expand coverage statewide as part of the MSPP application and contract negotiation processes. We acknowledge the commenters' concern for red-lining and other ''cherry-picking'' practices where an issuer might offer plans only in geographic areas that are expected to have lower risk. Therefore, we will evaluate MSPP issuers to ensure that the locations in which they propose to offer MSP coverage have been established without regard to racial, ethnic, language, health-status-related factors listed in section 2705(a) of the PHS Act, or other factors that exclude specific high-utilizing, high-cost, or medically-underserved populations. We agree that a core purpose of the MSPP is to provide additional choice of health insurance plans and promote competition on the Exchanges, and MSPP issuers should not be permitted to avoid areas in a State that are difficult to serve. We are aware of these concerns and are committed to MSPP issuers being neither competitively advantaged nor disadvantaged, compared to QHP issuers.

OPM proposed that, by the end of the phase-in period, MSPP issuers should be required to offer coverage on the SHOP in addition to the individual Exchange. We solicited comments on this approach to SHOP participation, including on whether participation in SHOP should be required from the outset or whether we should allow MSPP issuers to provide a plan that requires a period longer than the phase-in period to fully participate in the SHOP. We received comments on the phase-in to SHOPs from States, an issuer association, and professional organizations.

Comments: Several commenters supported our approach of allowing MSPP issuers the flexibility to phase-in to SHOPs. One commenter asked that OPM clarify whether the statement in the preamble that the ''MSPP issuer may choose to participate in the SHOP'' is a proposal to phase-in MSPP issuer coverage in the SHOP. Some commenters were concerned that MSPs will have a competitive advantage if they are not required to follow the same

rules as the Federally-facilitated Exchange and State requirements for QHPs to offer coverage in both the individual and SHOP markets. One commenter noted that OPM's approach presents a significant challenge, since it has merged markets. Some commenters would like OPM to require participation in the SHOP from the outset or require full participation in the SHOP at the fourth year of phase-in.

Response: We appreciate the support for our approach of allowing MSPP issuers the flexibility to phase-in coverage to the SHOPs, which was discussed in the preamble of the proposed rule, though not addressed in the regulatory text. Based on the policy for Federally-facilitated SHOP participation published in the HHS Payment Notice, we are finalizing our regulation to require MSPP issuers to comply with 45 CFR 156.200(g). In the HHS Payment Notice, HHS adopted a provision stating that a QHP issuer applicant will participate in a Federally-facilitated SHOP based on an issuer applicant's current small group market share. The provision uses a threshold of 20 percent market share to determine whether a small group market issuer is subject to the tying provision for QHPs in the Federally-facilitated SHOPs. For the MSPP, we believe this standard for the Federally-facilitated SHOP can be met if a State-level MSPP issuer or any other issuer in the same issuer group affiliated with an MSPP issuer provides coverage on the Federally-facilitated SHOP.

In this final rule, we adopt a policy for the MSPP that mirrors the standard set by HHS for the Federally-facilitated SHOP. We also adopt a policy for SHOP participation on State-based Exchanges that is consistent with our approach to State law under § 800.114 while retaining OPM discretion on timing of MSPP issuers to participate in the SHOP. For State-based SHOPs, we will permit an MSPP issuer flexibility to phase-in participation in the SHOP if the State has set a standard that requires QHPs to participate. We understand the burden of building capacity and network in order to offer in the SHOPs and want to balance the needs of small employers, MSPP issuers, and States. We believe section 1334(e) provides OPM discretion to allow an MSPP issuer to phase-in SHOP participation in States that require participation and this flexibility meets the needs of many stakeholders. Therefore, we are finalizing regulatory text in § 800.104(c) that requires MSPP issuers to comply with standards in 45 CFR 156.200(g) and with State standards for SHOP participation, subject to § 800.114, and gives OPM discretion to provide MSPP issuers flexibility during the initial years of the program to phase into the SHOP in a State-based Exchange. We also clarify that an MSPP issuer must offer coverage for both individuals and small groups in a State with a merged individual and small group market. We encourage MSPP issuers to expand coverage in States and SHOPs when they have adequate capacity to accept enrollees.

Benefits (§ 800.105)

In § 800.105, OPM proposed to implement section 1334(c)(1)(A) of the Affordable Care Act, which directs an MSP to offer a benefits package that is uniform in each State and consists of the EHB described in section 1302 of the Affordable Care Act. OPM developed its benefits policy in coordination with HHS, which promulgated the EHB rule. Generally, under that rule, EHB would be defined by a benchmark plan selected by each State or, in the absence of a State benchmark designation, a default benchmark. However, the EHB rule also states at 45 CFR 156.105 that MSPs must meet benchmark standards set by OPM.

In § 800.105(a)(1), OPM proposed that an MSPP issuer must offer a uniform benefits package for each MSP and that the benefits for each MSP must be uniform within a State, but not necessarily uniform among States. In § 800.105(a)(2), OPM proposed that the benefits package referred to in § 800.105(a)(1) must comply with section 1302 of the Affordable Care Act, as well as any applicable standards set by OPM or HHS in regulations. Together, these provisions clarify that MSPP issuers must comply with applicable HHS requirements and that OPM may issue additional guidance regarding any issues unique to MSPs.

In § 800.105(b)(1), OPM proposed allowing MSPP issuers to offer a benefits package, in all States, that is substantially equal to either (1) each State's EHB-benchmark plan in each State in which it operates; or (2) any EHB-benchmark plan selected by OPM. The second option offers administrative efficiencies for MSPP issuers, who face a number of challenges in being able to offer MSPs on each Exchange in all States and the District of Columbia. We also noted in our proposed rule that MSPP issuers could potentially achieve a similar consistency in their benefits offerings by adhering to State EHB-benchmark plans and applying the EHB substitution rules at 45 CFR 156.115.

Comments: We received many comments on the proposed EHB-benchmark policy from a broad range of stakeholders. Many commenters argued that the proposed policy would lead to adverse selection or consumer confusion. Some commenters argued that the proposed policy would also constitute Federal preemption of State authority to regulate insurance. At least one commenter said that the proposed policy would lead to administrative complexities and inefficiencies. Finally, some commenters preferred to have only a national benchmark.

Some commenters noted that differences between an OPM-selected benchmark and State-selected benchmark are unlikely to be actuarially significant. Some commenters also noted that the proposed policy would encourage issuers to participate in the MSPP. Other commenters also noted that OPM-selected benchmarks would provide robust prescription drug coverage, obesity treatment services, medical nutrition therapy, pediatric services, and chiropractic care.

Response: We agree with commenters who noted that the differences between an OPM-selected benchmark and State-selected benchmark are unlikely to be actuarially significant. We are not aware of any compelling evidence that multiple benchmarks would lead to adverse selection or consumer confusion, nor did the commenters produce any evidence of adverse selection or consumer confusion. Accordingly, we are adopting as final the proposed provision to allow an MSPP issuer to offer a benefits package in all States that is substantially equal to either the EHB-benchmark plan in each State in which it proposes to offer an MSP or any EHB-benchmark plan selected by OPM.

Comments: Several commenters discussed the need for national MSPs for American Indians/Alaska Natives.

Response: We acknowledge that consistency among States would be helpful for I/T/Us that may consider purchasing plans for tribes that are in multiple States. Members of tribes would still need to access the Exchanges in their States to determine their eligibility and enrollment for products available through the Exchange, including an MSP. While the MSPP is not a national plan, reciprocity of coverage among MSPs in States is an issue we intend to take up in contract negotiations with MSPP issuers. We look forward to conferring with tribes on this approach and engaging them in how the MSPP may best meet their needs.

Comments: Several commenters asked us to eliminate or provide additional guidance regarding the ''substantially equal'' standard.

Response: Because HHS is defining the standard for the term ''substantially equal,'' we expect MSPP issuers to follow HHS guidance relating to this term.

OPM also proposed that even if an MSPP issuer chooses to use an EHB-benchmark plan selected by OPM in all States, the MSPP issuer must still use a State-selected benchmark in States that do not allow any substitution for services within the benchmark benefits. The reason for this is if an MSPP issuer were to use an OPM-selected benchmark in States that require all plans to offer the same set of benefits, then the MSP in that State would be different from all of the other plans offered on the market, which could potentially lead to market disruption, adverse selection, or consumer confusion could occur.

Comments: Many commenters supported the policy that OPM-selected benchmarks and substitutions not be allowed in States having standard benefit designs.

Response: We are adding a paragraph (b)(3) to § 800.105 to clarify that an MSPP issuer must comply with any State standards relating to substitution of benchmark benefits or standard benefit designs. Accordingly, in a State that does not allow substitution of benchmark benefits, or that has standard benefit designs, an MSPP issuer that has chosen to use an OPM-selected EHB-benchmark plan under paragraph (b)(2)(ii) must use the State's EHB-benchmark plan.

No matter which option an MSPP issuer chooses, it must apply that option uniformly in each State in which the MSPP issuer proposes to offer MSPs. This means that, except as discussed above, our approach will not permit an issuer to use a State benchmark plan in some States in which it operates and an OPM-chosen benchmark plan in others.

In § 800.105(c)(1), OPM proposed selecting, as EHB-benchmark plans, the three largest FEHBP plan options by enrollment that are open to Federal employees and annuitants, which were identified by HHS pursuant to section 1302(b) of the Affordable Care Act. On July 3, 2012, HHS identified the three largest FEHBP plan options (as of March 31, 2012) as Blue Cross Blue Shield (BCBS) Standard Option; BCBS Basic Option; and Government Employees Health Association (GEHA) Standard Option.[1] An MSPP issuer that selects one of these benchmarks must offer this benefits package in all States in which it operates an MSP.

Several commenters urged OPM to be judicious in evaluating all proposed benchmarks. Based on initial comparative research, it appears that the proposed OPM-selected EHB-benchmark plans are largely similar in scope of benefits covered to those benchmark-eligible plans in the small group markets.[2] This research also indicates that the OPM-selected EHB-benchmark plans, like other benchmark-eligible plans, may lack coverage for pediatric oral services, pediatric vision services, and habilitative services and devices. Moreover, the EHB-benchmark may also lack State-required benefits. Accordingly, OPM proposed standards to supplement the OPM-selected EHB-benchmark plans in § 800.105(c)(2)–(c)(4).

In § 800.105(c)(2), we proposed that any OPM-selected EHB-benchmark plan lacking coverage of pediatric oral services or pediatric vision services must be supplemented by the addition of the entire category of benefits from the largest Federal Employee Dental and Vision Insurance Program (FEDVIP) dental or vision plan option, respectively, pursuant to 45 CFR 156.110(b) and section 1302(b) of the Affordable Care Act. On July 3, 2012, HHS identified the largest FEDVIP dental and vision plan options, as of March 31, 2012, to be, respectively, MetLife Federal Dental Plan High Option and FEP BlueVision High Option.

We also solicited comments on the provision of pediatric oral services by MSPs in order to meet the requirements of section 1302(b)(1)(J) of the Affordable Care Act. Under one proposed approach, an MSP would include pediatric oral services in its benefit package. Finally, we solicited comments on how stand-alone dental plans offered on the Exchanges should affect this requirement, if at all.

Comments: While some commenters favored offering stand-alone dental plans, others expressed concern that the expense of separate out-of-pocket maximums might discourage families from purchasing separate coverage for pediatric oral services. Some commenters proposed to require all MSPs to offer both a complete medical package and an identical plan without pediatric oral services in areas where stand-alone pediatric dental coverage is available.

Response: Given the range of possible benefit designs, we are not promulgating any further regulatory provisions regarding coverage of pediatric oral services. Instead, we will keep these comments in mind during MSPP contract negotiations, which would allow greater flexibility on benefit designs.

In § 800.105(c)(3), we proposed that an MSPP issuer must follow State definitions for habilitative services and devices where the State chooses to specifically define this category pursuant to 45 CFR 156.110(f). When a State chooses not to define this category and any OPM-selected EHB-benchmark plan lacks coverage of habilitative services and devices, OPM may determine what to include in this category.

Comments: All commenters supported OPM's intention to include habilitative services and devices in the MSPs. However, they disagreed on whether we should defer to State definitions or have OPM define a specific set of habilitative services and devices that each MSP must cover. Some asked that we require parity in scope, amount, and duration for habilitative and rehabilitative services. Other commenters supported our proposed approach for when a State chooses not to define the category of habilitation. When this happens, we will determine what habilitative services and devices must be included in an OPM-selected EHB-benchmark plan. One commenter suggested that we refer to both habilitative ''services and devices'' in § 800.105(c)(3) as we do in § 800.105(c)(4).

Response: Based on the comments, we will direct MSPP issuers to follow State definitions of habilitative services and devices where they exist and, where they do not exist, OPM will consider these comments during MSPP contract negotiation. We are adopting proposed § 800.105(c)(3) as final, with the one technical correction mentioned above.

In § 800.105(c)(4), OPM proposed that, at least for years 2014 and 2015, OPM's EHB-benchmark plans would also include, for each State, any State-required benefits enacted by December 31, 2011, that are included in a State's EHB-benchmark plan or specific to the market in which the MSPP issuer offers coverage. Accordingly, these State-required benefits would be treated as part of the EHB. However, consistent with 45 CFR 155.170, OPM proposed that State-required benefits enacted after December 31, 2011, would be in addition to the EHB. Under section

[1] Centers for Medicare and Medicaid Services, Essential Health Benefits: List of the Largest Three Small Group Products by State, available at *http://cciio.cms.gov/resources/files/largest-smgroup-products-7-2-2012.pdf.PDF* (July 3, 2012).

[2] U.S. Department of Health and Human Services, Office of the Assistant Secretary for Planning and Evaluation, ASPE Research Brief, Essential Health Benefits: Comparing Benefits in Small Group Products and State and Federal Employee Plans, available at *http://aspe.hhs.gov/health/reports/2011/MarketComparison/rb.pdf* (December 2011).

1334(c)(4) of the Affordable Care Act, a State must assume the cost of such additional benefits over the EHB by making payments either to the enrollee or on behalf of the enrollee to the MSPP issuer, if applicable. An MSPP issuer must calculate and report the costs of additional State-required benefits pursuant to § 800.105(e). This standard is also consistent with 45 CFR 155.170.

Comments: Most commenters supported the inclusion of State-required benefits before December 31, 2011. However, one commenter opposed the inclusion of State-required benefits. Another commenter stated that the cutoff date for inclusion of State-required benefits should be November 26, 2012, the date when the proposed EHB rule was published.

Response: We are making no changes to § 800.105(c)(4), because it is consistent with standards applicable to QHPs at 45 CFR 155.170.

Comments: Several commenters recommended that State payments for State-required benefits above the EHB benchmark be made only to issuers instead of allowing States the option of making payments to either issuers or enrollees.

Response: We are making no changes to proposed § 800.105(e), because it is consistent with section 1334(c)(4) of the Affordable Care Act, as well as standards applicable to QHPs at 45 CFR 155.170.

In § 800.105(d), OPM proposed that an MSPP issuer's benefits package, including its prescription drug list, must be submitted to and approved by OPM, which will determine whether a benefits package proposed by an MSPP issuer is substantially equal to an EHB-benchmark plan, in accordance with the requirements set forth by HHS in the proposed EHB rule. In determining whether an MSPP issuer's benefits package should be approved, OPM proposed to follow the HHS approach set forth at 45 CFR 156.115, 156.122, and 156.125. Section 156.115(b) of title 45, Code of Federal Regulations, allows issuers to make benefit substitutions within each EHB category and directs issuers to submit evidence of actuarial equivalence of substituted benefits to a State. We requested comments on whether MSPP issuers should submit evidence of actuarial equivalence of substituted benefits to OPM in addition to, or in lieu of, their submission to a State.

Comments: Many commenters recommended that, if MSPP issuers are allowed to make actuarially equivalent substitutions, evidence should be submitted to both States and OPM.

Response: We are adopting the proposed § 800.105(d), and we will work collaboratively with State regulatory officials during the MSPP application process to ensure they receive evidence of actuarial equivalence of substituted benefits.

In reviewing an MSPP issuer's proposed benefit design, OPM plans to review an MSPP issuer's benefits package for discriminatory benefit design, consistent with section 1302(b)(4) of the Affordable Care Act and 45 CFR 156.110(d), 156.110(e), and 156.125, and will work closely with States and HHS to identify and investigate any potentially discriminatory benefit design in MSPs.

In summary, we are adopting proposed § 800.105 as final, with the change described above relating to standardized benefit designs. We also are making minor technical corrections, including by inserting a reference to both habilitative ''services and devices'' in § 800.105(c)(3) to be consistent with § 800.105(c)(4).

Cost-Sharing Limits, Premium Tax Credits, and Cost-Sharing Reductions (§ 800.106)

In § 800.106(a), OPM proposed that, for each MSP it offers, an MSPP issuer must ensure that the cost-sharing provisions of the MSP comply with section 1302(c) of the Affordable Care Act as well as any applicable standards set by OPM or HHS in regulations. The HHS standards are set forth in 45 CFR 156.130. In § 800.106(b), OPM proposed that an MSPP issuer, for each MSP it offers, must ensure that an eligible individual receives advance payments of premium tax credits under section 36B of the Internal Revenue Code (the Code) and cost-sharing reductions under section 1402 of the Affordable Care Act. This provision would establish MSPP issuer responsibilities under section 1334(c)(3)(A) of the Affordable Care Act, which specifies that an individual enrolled in an MSP is eligible for the premium tax credits and cost-sharing reductions in the same manner as an individual who is enrolled in a QHP. We clarify that under § 800.106(b), MSPP issuers must comply with the same standards as QHP issuers, including applicable provisions of sections 1402(a)(2) and 1412(c)(2)(B) of the Affordable Care Act and 45 CFR part 156, subpart E. OPM may issue additional guidance regarding any unique issues faced by MSPs.

We received comments on this section from a broad spectrum of consumer and professional organizations and a few individual States. In general, our intention is to require MSPP issuers to comply with Exchange rules to ensure that MSPs operate on a level playing field with other issuers operating in the Exchanges. To the extent any rules governing MSPs differ from those governing QHPs, OPM will design them to afford the MSPs and MSPP issuers neither a competitive advantage nor a disadvantage with respect to other plans offered on the Exchange.

Comments: Some commenters requested that OPM clarify its requirement that MSPPs must comply with State cost-sharing restrictions.

Response: It is our intention to require MSPP issuers to follow HHS rules regarding cost-sharing except when State laws impose stricter requirements for their Exchanges. In the event a State standardizes cost-sharing arrangements and these standards comply with HHS regulations, an MSPP issuer will also be required to comply with State standards for cost-sharing.

Comments: One group of commenters suggested that OPM require an MSP to cover out-of-network subspecialty care with the same cost-sharing arrangements as in-network.

Response: As acknowledged in our final application for the MSPP, we may, in some circumstances, also require MSPP issuers to provide in-network benefits for services from certain out-of-network providers; however, this would not be done through rulemaking. We will take these comments under consideration during our contract negotiation with MSPP issuers.

Concerns about the cost-sharing variation for American Indian/Alaska Native families who want to purchase child-only coverage are not within the scope of OPM's rulemaking authority. The Exchanges and HHS will facilitate all plan variations between MSPP issuers and potential enrollees just as they will do for families participating in the QHPs. However, where appropriate, OPM will coordinate closely with HHS on areas of special concern for American Indian/Alaska Native adults and children.

We are adopting proposed § 800.106(a) as final, with no changes, and we are making technical changes to § 800.106(b).

Levels of Coverage (§ 800.107)

In § 800.107, we proposed that an MSPP issuer, like a QHP issuer participating in Exchanges, must offer at least one plan at the silver level of coverage and one plan at the gold level of coverage in each Exchange in which the issuer is certified to offer an MSP pursuant to a contract with OPM. OPM will use its discretion about whether an MSPP issuer may offer products in

addition to the required gold and silver products.

We also proposed that an MSPP issuer must offer a child-only plan at the same level of coverage as any health insurance coverage offered to individuals who, as of the beginning of the plan year, have not attained the age of 21. OPM proposed that MSPP issuers must comply with applicable HHS requirements to offer plan variations that will reduce or eliminate cost-sharing for eligible enrollees pursuant to section 1402 of the Affordable Care Act. Any MSP plan variations will be submitted to OPM for review and approval, and OPM will coordinate its approach to them with the final HHS notice of benefit and payment parameters for 2014. OPM will exercise this discretion to promote the best interests of enrollees and potential enrollees in the MSPP and to ensure adequate administrative oversight of each MSP and MSPP issuer.

A number of comments, although informative, relate to issues that do not fall within the scope of OPM's rulemaking. In general, our intention is to direct MSPP issuers to comply with State requirements related to the offering of levels of coverage, including but not limited to standardized benefit designs and tiers.

Comments: Some commenters recommended that OPM require or encourage MSPP issuers to offer coverage beyond gold and silver plans. The suggestions included requiring MSPP issuers to offer one or more of the following: At least one bronze plan; a plan in both the MSP and State Medicaid program; and catastrophic coverage.

Response: The Affordable Care Act requires each MSPP issuer to offer both a gold and silver plan. OPM will not require bronze coverage through this regulation, but has the discretion to approve other levels of coverage through contract negotiation with issuers. Therefore, where a State allows it, we will consider plans that offer catastrophic or bronze levels of coverage. We will also consider applicants to the MSPP that propose to offer an MSP in the Exchange and simultaneously provide coverage through a State Medicaid program. We agree with commenters that this would reduce the potential for gaps as consumers transition between Medicaid and Exchange eligibility. However, we do not have authority to require MSPP issuers to participate in Medicaid.

No changes are needed in § 800.107 in light of the comments we received. Therefore, we are adopting proposed § 800.107 as final, with no changes.

Assessments and User Fees (§ 800.108)

The proposed rule provides OPM discretion to collect an assessment or user fee from MSPP issuers as a condition of participating in the MSPP. The proposed rule also describes, generally, that any OPM-collected assessments and user fees would be to cover the administrative costs of performing the contracting and certification of MSPs and of operating the program, functions typically conducted through an Exchange for QHPs.

Comments: Some commenters asked OPM to confirm that MSPP issuers would pay any State-based Exchange user fees in addition to the MSPP-specific assessments or user fees. These commenters were concerned that any administrative fee above and beyond the Exchange fee charged to QHP issuers is duplicative and could lead to a competitive disadvantage for MSPP issuers. One commenter asked how the process for paying assessments and user fees to OPM would work.

Response: In this final rule, OPM is preserving its discretion to collect an MSPP assessment or user fee, and clarifies that it may begin collecting the fee in 2015; OPM does not intend to collect an assessment or user fee in 2014. The user fee could be used to fund OPM activities directly related to MSPP certification and administration. We currently estimate that any future assessment or fee would be no more than 0.2 percent of premiums.

The MSPP user fee would not be a substitute for any user fee or assessment imposed by a State-based Exchange or Federally-facilitated Exchange. Rather, OPM intends for any MSPP user fee it collects to be offset against any State-based Exchange or Federally-facilitated Exchange user fee that the MSPP issuer must pay. This offset would preserve a level playing field for MSPP issuers. Under this approach, the MSPP issuers would pay the same total assessment or user fee to participate in an Exchange as all other QHPs participating in that Exchange. In addition, this process would allow the Exchanges to receive the bulk of the user fee from MSPP issuers to cover the Exchange costs, while also providing a marginal amount to fund the certification activities that OPM will perform in the place of an Exchange with respect to the MSPs.

OPM would issue further guidance in advance of collecting any user fees in 2015. For example, OPM would provide instructions on whether MSPP issuers should pay the MSPP portion of the user fee to OPM and pay separately the balance of the State-based or Federally-facilitated Exchange user fee to the State or HHS, as appropriate.

Comments: Several commenters wanted more detail about OPM's costs for certifying and administering the MSPP and to what use the assessment or user fee would be put. One commenter suggested eliminating the assessment or user fee since MSPP administration is a function of OPM.

Response: As stated in the proposed rule, the MSPP assessment or user fee would be used for OPM's MSPP functions for administration, including entering into contracts with, certifying, recertifying, decertifying, and overseeing MSPs and MSPP issuers for that plan year. OPM will communicate such costs to MSPP issuers and Exchanges when available. The MSPP user fee is similar to a fee that OPM collects and uses to administer contracts for the FEHBP and will only be used to administer the MSPP as it performs plan management functions similar to State-based and Federally-facilitated Exchanges.

Network Adequacy (§ 800.109)

OPM proposed, in § 800.109, a standard for network adequacy for the MSPP that mirrors the HHS standard set forth in 45 CFR 156.230 and is intended to ensure that an MSP's services are available to all enrollees. Consistent with the Exchange final rule's alignment with the NAIC Model Act, OPM proposed directing an MSPP issuer to (1) maintain a network that is sufficient in the number and types of providers to ensure that all services will be accessible without reasonable delay for enrollees; (2) offer a provider network that is consistent with network adequacy provisions set forth in section 2702(c) of the PHS Act; and (3) offer a provider network that includes essential community providers in compliance with 45 CFR 156.235. OPM intends for an MSPP issuer to make its provider directory available to the Exchange for online publication and to potential enrollees in hard copy, upon request. The proposed regulation stated that OPM would issue guidance containing the criteria and standards that OPM will use to determine the adequacy of a provider network. In addition, we solicited comment on State licensure and any issues for MSPs with respect to State-specific network adequacy requirements.

Comments: Some commenters recommended that network adequacy provisions include specific provider types, such as certified registered nurse anesthetists, tribal health care providers, chiropractic physicians, optometrists, and Christian Science providers. Some

commenters also stated that OPM should prohibit discrimination against specific provider types. A few commenters recommended that OPM require MSPP issuers to adopt a standard Indian Addendum for contracting with tribal health care providers.

Response: While the MSP network adequacy standard should provide access to a range of health care providers, specifying the inclusion of specified provider types, beyond what is required under the Affordable Care Act for QHPs (e.g., essential community providers), would detract from the larger issue of broadly ensuring affordable access to the full range of covered services. Accordingly, the final rule retains the language in proposed § 800.109(a) that requires MSPP issuers to maintain networks that include sufficient numbers and types of providers to ensure all services will be accessible without unreasonable delay. This includes providers representing medical, surgical, pediatric, mental health, and allied health disciplines to meet the anticipated health care needs of a diverse patient population. We acknowledge the importance of having standards in place to prevent discrimination against specific provider types, because a variety of providers is important for accessing services. However, we believe that the non-discrimination standards set forth in §§ 800.101 and 800.102 adequately prohibit discrimination against specific provider types. OPM will reinforce these protections through its contract negotiations with MSPP issuers.

With regard to the comments on the standard Indian Addendum, OPM recognizes that furnishing MSPP issuers with a standard Indian Addendum to a provider contract may make it easier for MSPP issuers to contract with Indian providers. We are aware that the Centers for Medicare and Medicaid Services (CMS) has partnered with the Indian Health Service to develop a Draft Model Qualified Health Program Addendum for contracting between QHP issuers and tribal health care providers. However, CMS has not required that QHP issuers use the Addendum in the Exchange rule. We think it more appropriate to address this issue in our contract negotiations. We will continue to coordinate closely with CMS on the use of the standard Indian Addendum by MSPP issuers when contracting with Indian providers.

Comments: A few commenters recommended that OPM require MSPP issuers to contract with ''any willing essential community provider.'' Similarly, a few commenters suggested that OPM require MSPP issuers to comply with any State laws concerning ''any willing provider'' or ''any willing pharmacy.''

Response: In proposed § 800.109(a)(3), OPM adopted an approach that mirrors that of HHS regarding inclusion of essential community providers for QHPs. OPM intends for MSPP issuers to contract with essential community providers. We do not intend to change this provision of the proposed regulation, but we wish to assure commenters that we consider §§ 800.109(a) and 800.114 to require MSPP issuers to comply with State ''any willing provider'' laws.

Comments: We received some comments related to standards for provider directories under proposed § 800.109(b). Overall, commenters supported the proposed standards, which mirrored the HHS standards in the Exchange final rule. However, one commenter suggested that OPM require MSPP issuers to maintain a dedicated email address that providers and consumers could use to submit inaccurate provider directory information for correction. In addition, another commenter requested that OPM streamline requirements for provider directories by allowing downloadable electronic versions in place of hard copy and avoiding requiring regular updates of providers accepting new patients.

Response: The proposed § 800.109(c) mirrors the HHS approach to provider directories for QHPs. We will consider, during the MSPP contract negotiations, the comment on an MSPP issuer maintaining a dedicated email address for changes in provider directory information. With regard to the commenter who suggested that MSPP issuers not be required to provide a hard copy of the provider directory to potential enrollees upon request, this suggestion conflicts with HHS standards.

Comments: We received numerous comments related to establishing a uniform MSPP network adequacy standard. Many commenters did not support OPM developing a uniform standard for the MSPP. These commenters suggested that not applying the same standards to all QHPs and MSPs within a State would lead to adverse selection and market dislocation, and would not be in the best interests of consumers, though they did not submit any evidence to support these contentions. Specifically, two commenters identified States that had existing network adequacy standards for managed care products and recommended that an MSPP issuer comply with those standards. Conversely, many other commenters recommended that OPM establish a national, uniform standard for network adequacy for the MSPP. These commenters indicated that a uniform standard would be considered a critical component of the MSPP and is especially important in ensuring that MSPs provide reasonable and timely access to health care.

Response: OPM recognizes that many, though not all, States direct health insurance issuers to evaluate the adequacy of their provider networks on an ongoing basis and monitor network adequacy in their traditional role of regulating health insurance. Based on comments received on the proposed rule, and informed by previous comments concerning the RFI and the draft application, we have adopted an approach under which the MSPP will establish a uniform standard for network adequacy using time and distance standards that are based on those published by CMS for Medicare Advantage plans (for providers and facilities) and Medicare Part D (for retail pharmacies), which we note meet the QHP network standards in 45 CFR 156.230. For 2014, we will assess MSPP issuers' compliance with these time and distance standards for a broad, diverse list of provider types and facility types, which we believe adequately reflects the ability of an MSPP issuer to assure that all services will be accessible without unreasonable delay for enrollees. More information is available in our final MSPP application that was published on January 18, 2013, on the Federal Business Opportunities Web site at *www.FBO.gov* under solicitation number OPM35–12–R–0006, Multi-State Plan Program.

In the first year of the MSPP, we will apply only the MSPP standard for MSPP issuer networks, and in future years may require an MSPP issuer to meet State network standards, if appropriate and in the best interest of MSP enrollees. Accordingly, we are adopting proposed § 800.109 as final, with no changes; however, we will continue to consider these comments during the MSPP contract negotiations.

Service Area (§ 800.110)

In § 800.110, OPM proposed that MSPP issuers comply with the service areas defined by Exchanges, but this does not necessarily require that an MSP be offered in all defined service areas. We also proposed that for each State in which the MSPP issuer does not offer coverage in all service areas, the MSPP issuer's application for participation in the MSPP and the information it submits to support

renewal of a contract must include a plan for offering coverage throughout the State. We sought comment on whether MSPP issuers should be required to offer MSPs in all service areas by the fourth year of participation in the MSPP.

Comments: We received some support for our proposal on service areas from a commenter stating that our policy allows MSPP issuers time to develop the capacity to offer coverage throughout a service area and this will enhance competition. Several commenters were concerned about MSPP issuers' ability to cherry-pick the areas where they offer plans. Some commenters recommended that MSP service and rating areas be aligned to prevent issuers from cherry-picking. Another commenter recommended that MSPs be required to comply with the service area requirements applicable to all other issuers in a State. One commenter recommended that MSPs be required to cover geographic service areas in a particular State where they are licensed if their license is other than statewide, and the commenter also recommended that MSPs should follow the same rules as QHPs, concerning partial rating regions. Finally, several commenters were concerned that our proposed policy may not ensure access in a meaningful way or promote competition.

Response: Similar to our response to comments on § 800.104, we are not prohibiting MSPP issuers from offering coverage in all service areas; on the contrary, we encourage them to do so if they have the capacity. We are clarifying in the final rule that MSPs will be required to comply with the service area requirements applicable to all QHPs in a State. We are not making any additional requirements regarding partial rating regions or geographic service areas in States with certain licensure laws that determine service area. We acknowledge the commenters' concern that issuers may cherry-pick certain service areas. However, we believe that requiring that MSPs be subject to the same service area requirements as QHPs will create a level playing field and prevent issuers from cherry-picking. In addition, we intend to pay special attention to whether service areas include rural areas and American Indian/Alaska Natives during MSPP contract negotiations. We will evaluate the service area of an MSP to ensure that it has been established without regard to racial, ethnic, language, health status-related factors specified under section 2705(a) of the PHS Act, or other factors that exclude specific high-utilizing, high-cost or medically-underserved populations.

Similar to our changes under § 800.104, we are removing the requirement in the proposed rule that, for each State in which the MSPP issuer does not offer coverage in all service areas, the MSPP issuer would submit a plan on expanding coverage throughout the State. For reasons described in our responses to comments on § 800.104 related to statewide coverage, we intend to encourage MSPP issuers to expand coverage and will assess their capacity to do so through the MSPP contract negotiations.

Accreditation Requirement (§ 800.111)

In § 800.111, OPM proposed a requirement that MSPP issuers be or become accredited consistent with the HHS standards for QHP issuers. We also proposed that the MSPP issuer must authorize the accrediting entity to release to OPM and to Exchanges a copy of the MSPP issuer's most recent accreditation survey, along with any survey-related information that OPM or an Exchange may require. OPM also proposed that an issuer that is not accredited as of the date that it enters into a contract with OPM must become accredited within the timeframe established by OPM in accordance with 45 CFR 155.1045.

Comments: Several commenters recommended that OPM set a timeframe for accreditation that meets the accreditation timeframe set for QHP issuers either participating in Federally-facilitated Exchanges or in State-based Exchanges. Some commenters supported a unique timeline for MSPP issuer accreditation.

Response: OPM intends to follow the timeframe for accreditation in 45 CFR 155.1045 and similar provisions adopted by State-based Exchanges, though we are reserving the authority to set our own timeframe under narrow circumstances that take into account the unique nature of the MSPP. Due to the broad geographic coverage required for the MSPP, MSPP issuers may need additional time to collect data on local performance for accreditation. Similarly, a group of issuers coming together to contract as an MSPP issuer under a common service mark may need additional time to coordinate between accrediting entities or among component plans. Additional time may also be required if a component plan has previously been accredited by an entity other than the accrediting entities recognized by the Secretary. Therefore, in accordance with our authority under 45 CFR 155.1045, we are adopting our proposed approach in the final regulation, with no changes.

Comment: One commenter recommended that the MSPP issuer must have a schedule for a review of policies and procedures with a recognized accrediting agency during that initial year and have documentation that a readiness review for accreditation has been completed.

Response: OPM will consider this comment in creating contract language for MSPP issuers who are obtaining accreditation in accordance with § 800.111(c).

Comment: One commenter asked OPM to clarify how consumers will be educated about the differences between an accredited and unaccredited plan; another commenter requested that accreditation surveys be made public.

Response: Accreditation status of MSPP issuers (as well as all QHP issuers) will be made available to consumers through Exchange systems. No change in the regulation is needed.

Comment: One commenter suggested that to allow a group of independent insurance issuers to jointly offer an MSP, accreditation must be required at the State level rather than at a national level.

Response: MSPP issuers will be accredited on the basis of local performance in accordance with the requirements for QHP issuers specified in section 1311 of the Affordable Care Act and 45 CFR 156.275(a). No change is required in the proposed rule.

Reporting Requirements (§ 800.112)

The proposed § 800.112(a) specified that OPM may collect such data and information as are permitted or required by the Affordable Care Act to be collected from an MSPP issuer. OPM has also proposed to collect such other data and information as it determines necessary for the oversight and administration of the MSPP.

OPM will use its FEHBP contract administration as a model for reporting requirements. Examples of reporting that is currently required for FEHBP carriers and that may be required for the MSPP include financial reports, premium payment information, enrollment reporting, and quality assurance information.[3] OPM will determine the data and information that MSPP issuers report and the frequency and process for submitting such reports to be published in future guidance. Reporting of certain types of information is critical for OPM to

[3] OPM's Routine Reports and Submissions required for FEHB carriers is available at *http://www.opm.gov/carrier/reports/index.asp.*

implement and administer the MSPP. To oversee MSPP contracts, OPM will need to collect certain information to ensure the integrity of the MSPP, to protect enrollees, to prevent fraud and abuse, to monitor quality and quality improvement, and for other purposes.

Comments: Commenters raised several issues with regard to MSPP reporting requirements. Many commenters noted that MSPP issuers should comply with applicable State and Exchange standards.

Response: We note that § 800.115(e) requires MSPP issuers to comply with all Federal and State quality improvement and reporting requirements.

Comments: Many commenters also urged that we coordinate with States on data collection to avoid duplicative efforts. Some also asked us to share data with the public. A couple of commenters stated that OPM should not use a centralized health claims data warehouse for the MSPP, but adopt a decentralized approach.

Response: We agree with commenters that our approach to data collection should be coordinated with States. OPM intends to enter into MOUs with States to streamline data collection and reduce duplicate reporting requirements. This rule does not address specifics of how OPM will collect data, and our method for data collection will be developed in future policy guidance, in consultation with HHS.

Comment: One commenter stated that the MSPP should adopt the pharmacy benefit manager (PBM) transparency standards that OPM has established for the FEHBP, while another commenter opposed such an approach.

Response: PBM transparency standards will be established through the MSPP contract, and we will consider these comments in developing contract language.

Comments: Several commenters urged us to adopt specific data collection requirements, such as annual reports on each health plan, including data on the number of enrollees receiving treatment for drug and alcohol abuse and MSPP issuer definitions of medical necessity and rider policies.

Response: Specific reporting requirements may change from year to year based on the needs of the program. Accordingly, such issues are more appropriately addressed through contract negotiations, rather than this regulation.

Comments: The preamble of the proposed rule also suggested that OPM may collect demographic data. Several commenters supported data collection on demographics. A couple of commenters noted that issuers may not currently collect demographic data and, in some States, demographic data collection could be prohibited by law. One commenter opposed all demographic data collection.

Response: Although we are not finalizing any specific demographic data collection in this rule, our authority to administer MSPP contracts includes collection of demographic data, if we decide to do so in the future. In that event, we will consult with any States that have laws prohibiting collection of demographic data.

Section 800.112(b) specifies quality and quality improvement standards. With respect to quality reporting, under the FEHBP, OPM requires all health plans to report their performance through Healthcare Effectiveness Data and Information Set (HEDIS) metrics and Consumer Assessment of Healthcare Providers and Systems (CAHPS) surveys, independent of the source of plan accreditation. This allows for comparison among plans in a consistent manner. OPM expects to begin with a similar approach to performance measurement in MSPs to facilitate oversight. We expect our approach to evolve as HHS sets forth further guidance on quality reporting standards for QHPs.

Comments: Several commenters supported our proposed approach regarding quality and quality improvement standards. One commenter was concerned that requiring HEDIS reporting, which is proprietary to one accrediting entity, would be an undue burden to other accrediting entities. One commenter recommended that we immediately use the eValue8 quality reporting tool. Another commenter noted that we include measures applicable to children, including specific modules for children with special health care needs across the entire breadth of conditions and domains (preventive care, mental health, and chronic care).

Response: We are adopting in this final regulation our proposed approach to quality and quality improvement standards, because it reflects current FEHBP policies and Federal standards for QHPs. We anticipate that quality reporting standards will evolve over time, and we will consider these comments as the standards develop.

Benefit Plan Material or Information (§ 800.113)

In proposed § 800.20, OPM defined the term ''benefit plan material or information'' to include explanations or descriptions, whether printed or electronic, that describe a health insurance issuer's products. The term does not include a policy or contract for health insurance coverage. As it does in the FEHBP, OPM will review and approve the policy or contract for health insurance coverage. We view oversight of such contractual documents as uniquely within OPM's responsibilities under section 1334(a)(4) to implement the MSPP in a manner similar to the manner in which we implement the contracting provisions with respect to carriers under the FEHBP. OPM cannot manage MSPP contracts similarly to FEHBP contracts without the authority to review and revise these documents. See the discussion of § 800.20 for our responses to comments on the definition of ''benefit plan material or information.''

Section 800.113(a) states that MSPP issuers must comply with Federal and State laws related to benefit plan material or information. An MSPP issuer must also comply with OPM guidance specifying OPM standards, process, and timeline for approval of benefit plan material or information.

Comments: We received many comments about the proposed policy on compliance with Federal and State law. Several commenters supported the requirement that MSPP issuers comply with both Federal and State laws relating to benefit plan material or information. Several commenters wanted OPM to clarify that State approval of a policy form is a precondition of OPM approval. One commenter wanted OPM to defer to States for approval of policy forms, except where a State's action or inaction prevents an MSP from being offered on an exchange.

Response: While OPM intends to review and approve policy forms for health insurance coverage, OPM expects MSPP issuers to comply with related State law requirements for form review. Accordingly, an MSPP issuer's requirement to comply with State law includes the requirement to comply with form review laws. However, State approval of a policy form is not a precondition of OPM approval. OPM expects that few disagreements will arise between OPM and a State regarding form review and, if they do, we will work with the State to successfully resolve the discrepancy in a manner that is acceptable to both OPM and the particular State.

Proposed § 800.113(b) states that all MSP enrollee notices must meet minimum access standards for individuals with limited English proficiency (LEP) and for individuals with disabilities as described in 45 CFR 155.205(c). As stated in the final

Exchange rule, HHS intends to issue further guidance on minimum standards to address language access and coordinate HHS accessibility standards with insurance affordability programs, and across HHS programs, as appropriate. OPM expects MSPP issuers to comply with these minimum access standards once HHS publishes this guidance. OPM may also establish additional standards for MSPP applications and notices.

Comments: Several commenters wanted OPM to clarify that obligations to provide materials in different languages be calculated by State or service area, not nationwide. Two commenters wanted us to provide clearer guidance on our language access policies. They suggested that, to start with, OPM clarify that LEP guidance set forth by HHS' Office of Civil Rights, which is referenced in footnote 48 of the HHS proposed rule with respect to appeals, will also apply to other benefit material or information.

Response: Such guidance will be addressed through the contract negotiation process.

Section 800.113(c) states that an MSPP issuer is responsible for the accuracy of its benefit plan material or information. Section 800.113(d) states that benefit plan material or information must also be in plain language, be truthful, not be misleading, and have no material omissions.

QHPs must comply with the provisions of section 2715 of the PHS Act and its implementing regulations at 45 CFR 147.200 on Summary of Benefit and Coverage and Uniform Glossary requirements. Under § 800.113(e), OPM also will require MSPs to comply with the statute and regulations. Additionally, OPM expects that MSPP issuers will meet any requirements that allow standardized benefit information to be displayed on HHS or Exchange web portals.

Section 800.113(f) states that OPM will review and approve certain benefit plan material or information as defined in § 800.20 of the proposed regulation. OPM may not necessarily review all benefit plan material or information. It may request from MSPP issuers those materials that it wishes to review and approve. OPM's review will focus on the MSPP issuer's compliance with the standards promulgated by OPM with respect to benefit plan material or information.

Comments: One commenter did not want OPM to review and approve benefit plan material or information. One commenter was concerned about the practical difficulties for both issuers and regulators with respect to the dual requirement that OPM review and approve policy forms and that issuers also comply with State requirements. One commenter wanted more clarity on the interplay between Federal and State review. One commenter stated that OPM review of communication materials, and its discussion with States, should be concluded no later than 90 days prior to the beginning of the annual enrollment period.

Response: OPM cannot entirely cede responsibility for the review of benefit plan material or information since such review is important to oversight. Nonetheless, in order to avoid unnecessary duplication and burden, OPM will work with States concerning the review of benefit plan material or information and may work with States to define respective roles through MOUs. OPM will also aim for prompt review of benefit plan material or information.

Section 800.113(g) states that OPM will allow an MSPP issuer to state that OPM has certified a plan as an MSP and will oversee its administration. OPM is aware that many States have adopted laws or regulations prohibiting issuers from using advertisements that ''may lead the public to believe that the advertised coverages are somehow provided by or endorsed by [a] governmental agenc[y].'' [4] However, because OPM will have certified an MSPP issuer and an MSP as meeting certain standards, potential issuers may wish to include this fact in materials they distribute to the public subject to review by OPM. OPM does not view this as a violation of State law anti-endorsement provisions because it is not misleading, but rather a recitation of the fact that the issuer is providing coverage pursuant to a contract with OPM.

Comment: One commenter did not want MSPP issuers to include a statement on certification by OPM.

Response: For the reasons set forth above, we are adopting the proposed policy regarding statement of certification.

Comments: Several commenters stated that it is critical that the information about the special protections for American Indians/Alaska Natives be clearly stated in all plan materials so that they are informed about the cost-sharing plan variations that may apply to them so they can enroll in the correct plan. The commenters also stated that American Indians/Alaska Natives should know whether a plan network includes their I/T/U provider.

Response: We acknowledge that certain American Indians/Alaska Natives should be made aware of special protections and whether a plan includes I/T/U providers. We encourage MSPP issuers to make this information available to MSPP plan participants. We will continue to work with CMS and the Indian Health Service to make sure American Indians/Alaska Natives are informed about the cost-sharing plan variations.

Because no changes are required based on the comments received, OPM is adopting proposed § 800.113 as final, with no changes.

Compliance With Applicable State Law (§ 800.114)

As proposed, § 800.114 would require MSPP issuers generally to comply with State law. Paragraph (a) of the proposed regulation restated the requirement set forth in section 1334(b)(2) of the Affordable Care Act, including the three categories of State laws with which MSPP issuers need not comply: (1) State laws that are inconsistent with section 1334; (2) State laws that prevent the application of a requirement of part A of title XXVII of the PHS Act; and (3) State laws that prevent the application of a requirement of title I of the Affordable Care Act. We have made a technical edit in paragraph (a) to make it more consistent with § 800.116.

In paragraph (b) of proposed § 800.114, we provided greater detail on the methods OPM would use to determine whether a State law fits into one of the above categories. Specifically, we proposed that OPM would use a list of four factors: (1) Whether the law in question imposes a requirement that differs from those applicable to QHPs and QHP issuers on one or more Exchanges in the State; (2) whether the law creates responsibilities, administrative burdens, or costs that would significantly deter or impede the MSPP issuer from offering a viable product on one or more Exchanges; (3) whether the law creates responsibilities, administrative burdens, or costs that significantly deter or impede OPM's effective implementation of the MSPP; or (4) whether the law prevents an MSPP issuer from offering an MSP on one or more Exchanges in the State.

Comments: Many commenters found the factors listed in paragraph (b) to be too broad and vague. A few commenters noted that paragraph (b)(1) compares MSP requirements to QHP requirements, whereas (b)(2) appears to lack an analog against which to measure responsibilities, administrative burdens,

[4] These State law prohibitions derive from the NAIC's Advertisements of Accident and Sickness Insurance Model Regulation § 13.C. (Apr. 1999).

or costs that apply to MSPs and MSPP issuers. A few commenters expressed specific concern about the use of the words ''significantly deter or impede'' in paragraphs (b)(2) and (b)(3). A few commenters requested that the word ''unreasonable'' be added to paragraph (b)(2) to modify ''responsibilities, administrative burdens, or costs.'' A few commenters generally opposed OPM's authority to find that a State law is inconsistent with Federal law, and one commenter questioned OPM's legal authority to preempt State law through a determination of inconsistency.

Response: At proposed § 800.114(a), we listed the justifications for nonapplicability of a State law to the MSPP, as set forth at section 1334(b)(2) of the Affordable Care Act, which provides that an MSPP issuer must be ''subject to all requirements of State law not inconsistent with this section, including the standards and requirements that a State imposes that do not prevent the application of a requirement of part A of title XXVII of the [PHS] Act, or a requirement of this title [I of the Affordable Care Act.]'' In proposed paragraph (b), we listed factors that may inform OPM's analysis under paragraph (a). Although these listed elements would be considered relevant to the analysis, OPM would only be authorized to excuse an MSPP issuer from compliance with a State law that is inconsistent with section 1334 of the Affordable Care Act, prevents the application of a provision of part A of title XXVII of the PHS Act, or prevents the application of a requirement of title I of the Affordable Care Act.

In light of the concerns expressed concerning the regulatory factors identified in the proposed regulation, we have amended the regulatory text to remove the list of factors. By removing these factors from the regulation, we do not disavow them as relevant considerations in evaluating whether the statutory standard for preemption has been satisfied. Rather, we do not wish to give the impression that they are any more or less important than any other factors that may be relevant in a specific circumstance to a determination of whether a State law should be preempted.

Comment: One commenter recommended that OPM consider the seamlessness of a consumer's experience purchasing health insurance on an Exchange and the avoidance of consumer confusion in evaluating State laws under this section.

Response: We will consider all relevant information, including consumers' experiences in shopping on Exchanges, when determining whether a State law must be preempted under the statutory standards listed in paragraph (a). Each determination under this section will depend on specific facts and circumstances.

Comments: A few commenters recommended that OPM consult with States and Exchanges prior to making a determination of inconsistency under this section.

Response: We agree that OPM should work collaboratively with States, particularly in making determinations regarding State laws. OPM intends to continue to establish and cultivate working relationships with officials in State regulatory agencies and Exchanges. Such relationships may exist informally, or may eventually be reflected in MOUs, as OPM intends to pursue MOUs with each State in which the MSPs are being offered. In either case, OPM would consult with States during the process of making a determination of inconsistency regarding a State law. We have changed paragraph (b) to state expressly our intention to engage in such consultation.

Comments: Some commenters expect that OPM's ability to render a determination of inconsistency under this section will create competitive advantages for MSPs over QHPs. A few commenters stated that ''double regulation,'' by both OPM and each State, will competitively disadvantage MSPs.

Response: We are sensitive to concerns that the MSPP will create disruptions in different markets, and this regulation has been designed to comply with the statutory directives of the Affordable Care Act while minimizing any such disruptions. The proposed rule reflects a balanced approach under which an MSPP issuer will comply with all State laws except any with respect to which OPM has determined that such State law is contrary to Federal law. This approach will keep each MSP in relative balance with QHPs offered on the same Exchange. No evidence has been offered to support the commenters' assertion that OPM's reservation and potential exercise of this authority creates a competitive advantage for the MSPs or MSPP issuers.

Moreover, OPM's proposed framework for MSPP compliance incorporates State law and sets standards and requirements similar to those used successfully under the FEHBP. We designed this regulatory framework to ensure that the program is capable of sufficient flexibility to facilitate its implementation. We intend to employ that flexibility to take any appropriate action to ensure that MSPs are neither unreasonably competitively advantaged nor disadvantaged.

Comments: Some commenters recommended that we require compliance not only with State law but also with QHP standards set by States and Exchange authorities. A few commenters recommended that OPM require MSPP issuers to enter into contracts with Exchanges that will actively or selectively contract with QHP issuers. One commenter requested clarification that MSPP issuers would be required to comply with technical requirements for QHPs, such as data submission formatting.

Response: As noted in the preamble to the proposed rule, we intend that MSPs and MSPP issuers be subject to all of the same standards and requirements as QHPs and QHP issuers, except where deviations are authorized by law. We look forward to working collaboratively with States to ensure that we are aware of all relevant standards, including those of a technical nature, to ensure that MSPs and MSPP issuers comply with such standards.

Requiring MSPP issuers to enter into a contract with Exchanges would circumvent section 1334(d) of the Affordable Care Act, which vests certification authority for MSPs in OPM rather than Exchanges by providing that MSPs offered under a contract with OPM are deemed to be certified by an Exchange. We consider active or selective contracting models employed by Exchanges to be operational processes rather than QHP standards, and we will not direct MSPP issuers to participate in such processes, consistent with statute.

Comment: One commenter requested clarification that OPM's determination of inconsistency under this section would only apply to MSPs and MSPP issuers in Exchanges in one State, as opposed to throughout all States.

Response: A determination of inconsistency under this section would be limited to the State in which the State law in question exists. OPM recognizes that some State laws are based on model acts, and that several States may employ the same or similar language in State laws. However, we also realize that the facts and circumstances that give rise to a determination of inconsistency may vary from one State to another. OPM will evaluate State laws carefully, and will refer to previous determinations as precedent when determining the applicability of a State law, but will not automatically apply a determination of inconsistency to more than one State law without consulting with the State

regulatory agencies and Exchange(s), and thoroughly evaluating the unique facts and circumstances in each State.

Comment: One commenter requested clarification as to whether OPM would conduct independent research or rely on a complaint-driven process to select which State laws may be subject to a determination of inconsistency under this section.

Response: We intend to use all available information to assess the compatibility of State laws with the MSPP, including complaints from enrollees, communication with issuers, collaboration with States, and additional research.

Comment: One commenter recommended that OPM adopt a standard for noncompliance with State law where only a ''compelling national goal'' would justify a finding that a State law does not apply to MSPP issuers.

Response: The standards we have adopted are those set forth in the statute.

Comment: One commenter supported the proposed approach, but requested acknowledgement that OPM would assume responsibility for enforcement of State law with respect to MSPP issuers.

Response: Although we intend to communicate closely with States to ensure compliance with State and Federal laws, OPM is not authorized to assume responsibility for enforcement of State law. The same vehicles available to States to enforce their laws against QHPs would also be available to enforce them against MSPs. As noted above, we look forward to working collaboratively with States to ensure that consumers receive high-quality coverage.

Comment: One commenter supported our proposal, but requested clarification that OPM would decide whether a State law applies, as opposed to an issuer or another party.

Response: As reflected in the proposed regulatory text, we agree that OPM should decide whether a State law meets one of the three standards in paragraph (a). This responsibility flows from the statutory authority granted to OPM by section 1334 of the Affordable Care Act to implement and administer the MSPP.

Comments: A few commenters recommended that Federal Indian law be recognized separately from State law.

Response: The requirement for MSPP issuer compliance with State law set forth in § 800.114 is included in the final regulation to implement section 1334(b)(2) of the Affordable Care Act, which specifies that an MSPP issuer ''is subject to all requirements of State law not inconsistent with this section [1334], including the standards and requirements that a State imposes that do not prevent the application of a requirement of'' part A of title 27 of the PHS Act or title I of the Affordable Care Act. We acknowledge the unique concerns of I/T/Us, including concerns that involve the interaction of State law and Federal Indian law, and we intend to address them, to the extent practicable, through contractual terms.

Level Playing Field (§ 800.115)

In § 800.115, we proposed that an MSPP issuer would comply with Federal and State laws involving guaranteed renewal, rating, preexisting conditions, non-discrimination, quality improvement and reporting, fraud and abuse, licensure, solvency and financial requirements, market conduct, prompt payment, appeals and grievances, privacy and confidentiality, and benefit plan material or information. This section addresses compliance directly involving these areas of law, which are expressly listed at section 1324 of the Affordable Care Act. Section 1324 states that, if an MSP is not subject to a Federal or State law that falls into one of the 13 categories listed, no private health insurance coverage would be subject to such law. We received comments from States, Exchanges, consumer groups, providers and provider groups, pharmaceutical companies, and professional associations.

Comments: A few commenters, while generally supporting OPM's proposed approach, expressed concern that our approaches to rate review, benefit plan material and information, and external review may trigger section 1324 (i.e., that they would cause private insurance plans to be exempt from laws listed in that section).

Response: As explained in the preamble to the proposed rule and in the responses to comments regarding §§ 800.201, 800.501–504, and 800.113, our approach to rate review, benefit plan material or information, and external review would not excuse private health insurance coverage from compliance under section 1324. First, laws involving rate review do not fall within a category listed in section 1324 of the Affordable Care Act.

Second, our proposed rule explicitly requires MSPP issuers to comply with Federal and State laws related to benefit plan material or information. As set forth in § 800.20, and as discussed in responses to comments regarding that section and § 800.113, the definition of ''benefit plan material and information'' does not include a policy or contract for health insurance coverage.

Finally, as we indicated in the proposed rule, we believe that our approach to external review is required by section 1334 of the Affordable Care Act and does not trigger the level playing field provisions of section 1324 because our approach will comply with external review requirements.

Specifically, we believe our approach to external review is required by section 1334(a)(4), which directs OPM to implement the MSPP in a manner similar to the manner in which we implement the contracting provisions with respect to carriers under the FEHBP. External review is part of the contracting process. Through the external review process, matters of contract coverage are resolved.

As noted in the proposed rule, section 2719 of the PHS Act and its implementing regulations apply to all non-grandfathered group health plans and health insurance issuers, including MSPP issuers, with respect to internal claims and appeals and external review. We understand that the Departments of HHS, Labor, and the Treasury (the tri-Departments) intend to amend those regulations at 45 CFR 147.136 to clarify that the MSPP external review process is governed by section 2719(b)(2)(B). Under section 2719(b)(2), the external review requirements that must be met are established by the tri-Departments, which have made the judgment that the external review process adopted in this rule satisfies the requirements under that section. Thus, the level playing field provisions of section 1324 of the Affordable Care Act would not be triggered because MSPs and MSPP issuers would comply with the external review requirements in section 2719(b) of the PHS Act, just as other health insurance issuers in the group and individual markets are required to do. As noted in the **DATES** section of this notice of final rulemaking, rulemaking by the tri-Departments interpreting section 2719 in this manner has not yet been completed. We are making the provisions of this regulation on external review effective on the date that such tri-Department regulations become effective.

In addition, our approach to external review does not afford the MSPs any competitive advantage. Although OPM—instead of the States—will administer the external review process for MSPs, that process provides for application of the standards and requirements with which other issuers must comply under section 2719(b)(2) of the PHS Act. Thus, MSPs will in fact be

subject to, and comply with, the same law on external review as other issuers.

No commenter identified any State external review law that imposes higher standards than does the Federal external review law proposed for the MSPP. Based on our experience with the disputed claims process under the FEHBP, we believe that our external review process is comparable to any State external review process. We look forward to working collaboratively with States to ensure that our external review process is no less protective than the most protective State standards.

Comment: One commenter recommended the expansion of the scope of ''licensure'' under this section.

Response: We recognize that licensure laws in some States may impose varying requirements on health insurance issuers. Compliance with a broader range of State laws that may be conditions of licensure would be required under § 800.114 of this regulation, subject to the exceptions listed there. However, for purposes of analysis under this section, an MSPP issuer complies with laws ''relating to'' licensure by being licensed in each State in which the issuer offers an MSP.

Comment: One commenter requested clarification as to whether the inverse of section 1324 would also be required, i.e., whether the other private health insurance coverage in a State would be subject to a State law to which an MSP is subject.

Response: States typically regulate health insurance markets, and the MSPs will operate within those markets. As set forth in § 800.114, MSPs and MSPP issuers generally are subject to the same laws to which the rest of the health insurance market is subject.

Comments: A few commenters expressed concern that OPM would prompt a ''race to the bottom'' by circumventing, through the MSPP, consumer protections provided by State laws.

Response: The MSPP will promote uniformly high standards for MSPs to be made available to consumers. As noted in the proposed rule, we will deviate from State standards only when the standards are inconsistent with the implementation of OPM's statutory directive to implement this program. Like plans offered through the FEHBP, MSPs will be high-quality products that are subject to the experienced oversight of OPM.

We are adopting proposed § 800.115 as final, with no changes.

Process for Dispute Resolution (§ 800.116)

In § 800.116, we proposed a process by which a State may request that OPM reconsider a determination under § 800.114 that a State law does not apply to MSPs or MSPP issuers. The proposed process calls for a State to demonstrate that the State law at issue is not inconsistent with section 1334 of the Affordable Care Act, does not prevent the application of a requirement of part A of title XXVII of the PHS Act, and does not prevent the application of a requirement of title I of the Affordable Care Act. This section goes on to set forth the procedural framework for the process, including the form of the request, permissible supporting information and documentation, the timeframe for resolution, and the nature of OPM's written decision as final agency action. Most of the comments we received regarding this section were from States and Exchanges, and a few additional comments were submitted by consumer groups, issuers, and professional organizations.

Comments: A few commenters recommended that this process be conducted by a third party outside of OPM. One commenter suggested that disputes over the applicability of State law be conducted through State administrative and judicial processes.

Response: OPM cannot cede authority to make these determinations to an outside entity, because Congress directed OPM to implement and administer the MSPP.

The process outlined in this section offers a formal route to seek resolution of a complaint without having to initiate costly, contentious litigation over the applicability of State laws under the MSPP. Thus, review under this section would be conducted by a different official within OPM than the official who made an initial determination under § 800.114. Similar review is conducted under certain circumstances in the FEHBP when a dispute arises between OPM and a carrier. OPM's experience with such review has shown that it is an effective means of resolving disputes.

Comments: One commenter requested a shorter timeframe than the 60 days proposed in paragraph (c)(3). Another commenter recommended that OPM ensure the resolution of all potential disputes involving a State's law prior to an MSP being offered on an Exchange within that State.

Response: Sixty days is an appropriate period within which written decisions must be issued, but we intend to resolve each dispute under this section as quickly as possible after it arises.

We have attempted, through the provisions of this regulation, to anticipate potential Exchange approaches to substantive standards and requirements. However, we are aware that new State laws may be enacted or QHP standards established subsequent to the promulgation of this regulation. This process is necessitated in part by the evolving nature of health insurance regulation and QHP standards. In addition, we anticipate that any inconsistencies between State laws and section 1334 of the Affordable Care Act may not become apparent until after MSPP operations have begun. We intend to work collaboratively with States to mitigate or avoid any potential disruptions that may result from the ongoing nature of this process.

Comments: A few commenters recommended that a *de novo* review be conducted under this section, that State law applicability be presumed, or that OPM bear the ''burden'' of demonstrating that a determination of inconsistency is supported.

Response: This process is designed to create an avenue for a State to show that OPM's considered determination under § 800.114 was made in error, which would present an opportunity to avoid potential litigation that could arise from such a determination. As such, the State is responsible for demonstrating consistency between Federal and State law.

Comments: A few commenters recommended that determinations regarding laws under both §§ 800.114 and 800.115 be subject to the process for dispute resolution under this section. Other commenters requested clarification as to whether the dispute resolution applied to all State laws or only to State laws that do not fit into the list of categories under section 1324(b) of the Affordable Care Act.

Response: We agree that a State should have an opportunity to request reconsideration of a determination of inconsistency regarding any State law and we are revising paragraph (a) accordingly.

Comment: One commenter recommended that the record for judicial review under paragraph (c)(4) include all relevant information, not only the record that was before OPM when a decision was rendered.

Response: The Administrative Procedure Act permits judicial review of final agency action, and limits such review to the record that was before the agency when it took the action being reviewed. This regulation neither restricts nor expands that limitation.

Comments: A few commenters recommended that parties other than States be permitted to seek dispute resolution under this section. One commenter recommended that MSPP issuers bear the burden of demonstrating that State laws should not apply to them.

Response: This process is designed to assist States in working with OPM to prevent and mitigate market disruptions. State health insurance laws are regulatory by nature; the most expert entities to address them are therefore the regulatory agency and/or Exchange charged with their implementation. Regulatory agencies and Exchanges are well-equipped to represent the interests of the issuers with which they work and the consumers they serve.

We are amending paragraph (a) of § 800.116 as indicated above, to reflect that a determination of inconsistency involving any State law may be the subject of the process outlined in this section. We are also making a technical correction in paragraph (b) and inserting a technical amendment in paragraph (c)(3) for greater clarity.

Subpart C—Premiums, Rating Factors, Medical Loss Ratios, and Risk Adjustment

General Requirements (§ 800.201)

Under § 800.201, OPM proposed a number of standards for setting rates in the MSPP. First, we proposed that OPM would negotiate premiums, as provided in section 1334(a)(4) of the Affordable Care Act, in a similar manner to the way we negotiate with FEHBP carriers each year.

Second, the proposed rule included a provision that required MSPP rates to remain in effect for the 12-month plan year.

Third, OPM proposed to issue rating guidance for the MSPP, similar to the way OPM communicates with FEHBP carriers.

Fourth, we proposed that MSPP issuers comply with standards in HHS guidance for calculating actuarial value (AV), specifically those standards proposed in 45 CFR 156.135.

Fifth, OPM proposed a process for rate setting and review that requires an MSPP issuer to follow State rating standards with respect to rating factors generally applicable in a State. With respect to rate review, OPM's proposal reflected that some States have a prior approval process for rates and the authority to reject rates. Therefore, we proposed to work closely with each State in approving a rate for the MSPs in that State and to consult with that State about patterns in its markets and about other rates that an MSPP issuer might be proposing in that State for non-MSPs. In doing so, MSPP issuers would be required to file rates with a State, but the final decision regarding rates for MSPs would rest with OPM, as required by the statute. As described in proposed § 800.201(e) and (f), with respect to rate review, OPM's rate process and analysis will be transparent to States in which the MSP is operating. MSPP issuers will be subject to a State's rate review process, including a State's Effective Rate Review Program established by HHS pursuant to section 2794 of the PHS Act and 45 CFR part 154. OPM proposed that, for States with Effective Rate Review Programs under section 2794 of the PHS Act, the MSPP issuer would comply with the State standards. In addition, OPM proposed that in States where HHS is reviewing rates, HHS would accept the judgment of OPM for MSP rates. Furthermore, MSPP issuers must comply with the reporting and disclosure requirements for all rate justifications to HHS, States, and Exchanges, such as the requirements set forth in 42 CFR 156.210(c). In the event that a State withholds approval of an MSP rate for reasons that OPM determines, in its discretion, to be arbitrary, capricious, or an abuse of discretion, the Act authorizes the Director to make the final decision to approve rates for participation in the MSPP, notwithstanding the absence of State approval.

Finally, OPM proposed that MSPP issuers must comply with section 1312(c)(1) and (2) of the Affordable Care Act and implementing regulations, which provide that a health insurance issuer consider all enrollees in all non-grandfathered health plans in the individual market to be members of a single risk pool and all enrollees in non-grandfathered health plans in the small group market to be members of a single risk pool within a State. With proposed § 800.201(g), OPM clarified that an MSPP issuer must consider MSP enrollees to be members of the same risk pool as all other enrollees of the issuer in non-grandfathered health plans in the individual and small group markets, respectively. OPM received several comments on our general standards related to MSPP rate setting and review policies applicable to an MSPP issuer and related to compliance with sections 2701 and 2794 of the PHS Act.

Comments: Many commenters supported the general rate review approach set out for the MSPP, such as compliance with State rate review processes, single risk pool, calculation of AV, and State-based rating. Most of these commenters were concerned about OPM retaining discretion to negotiate premiums and having final approval of rates. A few commenters noted that there are administrative and judicial remedies available under State law for issuers who believe that rate approval has been withheld for reasons that are ''arbitrary, capricious, or an abuse of discretion'' and generally a State would be violating its own laws if it were to withhold for reasons that are ''arbitrary, capricious, or an abuse of discretion.'' The commenters also noted that this standard is broad and asked OPM to narrow its scope. One commenter suggested that if OPM were to bypass these remedies, MSPs would be given an unfair advantage over QHPs and would be violating State law. A few commenters recommended that OPM not reserve discretion in States with Effective Rate Review Programs. One commenter believed OPM's authority to negotiate rates in section 1334 of the Affordable Care Act is constrained by sections 1324 and 1252.

Response: Based on support from some commenters on our proposed approach, we are adopting this section as final, with modifications. Section 1334(a)(4) of the Affordable Care Act explicitly authorizes the Director to make the final decision to approve rates for participation in the MSPP, notwithstanding the existence or absence of State approval. We are fully aware of the complexities of rate review in 2014 and subsequent years, and we intend to collaborate closely with HHS and States on MSP rates. We agree with comments that MSPP issuers should use the remedies available under State laws related to rate review decisions. OPM will require MSPP issuers to allow the rate review process in States, including administrative and judicial remedies, to proceed unless the timeline for administration of the MSPP is threatened. In order to give MSPP issuers adequate time to prepare for open enrollment periods, we maintain our discretion to issue final decisions on MSP rates. For this reason, we are revising § 800.201(f) to clarify that OPM would exercise its discretion only in the event that the State's action would impede the Federal objective by preventing OPM from operating the MSPP. In addition, we are removing from the final regulation the ''arbitrary, capricious, or an abuse of discretion'' language, based on the comments we received. We expect that the Director will rarely, if ever, have to exercise this authority to disapprove or approve MSP rates over the approval or non-approval of a State.

We disagree with the interpretation that sections 1324 and 1252 constrain

OPM's authority to negotiate premiums. Were we to interpret these sections in the manner suggested by the commenter, section 1334(a)(4) of the Affordable Care Act, which requires the Director to ''negotiate[] * * * with each multi-state plan * * * the premiums to be charged,'' would be rendered inoperative. Section 1324(b)(2) refers to ''rating.'' OPM has defined ''rating'' for purposes of section 1324(b)(2) to require compliance with the rating factors permitted by the PHS Act as detailed in § 800.202. Rating factors refer to the factors issuers must use to develop their premiums. With regard to the MSPP, we do not consider ''rating'' to be the same as ''rate review.'' Rate review is a broader concept and is a necessary component of premium negotiation. As mentioned above, we intend to conduct our own process to review rates, and each State will have the opportunity to review the MSP rates under its own procedures. We intend to work cooperatively with the States, and have coordinated our policy with HHS.

In addition, the MSPP will comply with section 1252 of the Affordable Care Act. That section, entitled ''Rating Reforms Must Apply Uniformly * * *'' requires rating reforms adopted by a State pursuant to title I of the Affordable Care Act to apply uniformly within a market. Rating reforms, again, do not equate to ''rate review'' processes. Rather, consistent with OPM's interpretation of ''rating'' for purposes of section 1324(b)(2), rating reforms refer to reforms that constrain the factors upon which issuers rely to develop their premiums. Section 1252 does not constrain the Director's power to negotiate rates with MSP issuers under section 1334(a)(4).

Comment: In addition, the same commenter indicated its view that section 1252 constrains network adequacy rules.

Response: OPM does not agree with this comment, as section 1252 is limited in its scope to rating reforms.

Comment: This commenter further indicated that section 1301(a)(2) applies with ''equal force'' to MSPP issuers.

Response: While OPM acknowledges that QHP standards generally apply to the MSPP, section 1334(c) specifically reserves to the Director the discretion to determine whether QHP rules are satisfied in the context of the MSPP. Therefore, OPM does not agree that section 1301(a)(2) causes QHP rules to apply to MSPP ''with equal force,'' as they do not apply in the same manner with respect to enforcement.

Comment: One commenter asked OPM to clarify that the single risk pool standard proposed in the rule applies to MSPP issuers' pools within a State and not across States.

Response: Our intent was for an MSPP issuer to consider all enrollees in an MSP to be in the same risk pool as all enrollees in all other non-grandfathered health plans in the individual market or small group market, respectively, in compliance with section 1312(c) of the Affordable Care Act as well as HHS regulations implementing that section. Consistent with HHS guidance, we affirm that MSPP issuers will pool risk within a State and not across States, but we do not believe a change in the regulatory text is needed.

Comments: Some commenters suggested that OPM establish rules and conditions that will facilitate tribal sponsorship, to allow tribes to perform premium aggregation for individuals to enroll in MSPs.

Response: We are exploring whether potential issuers have the capacity to perform premium aggregation and/or accept aggregated premiums. In the MSPP issuer application, OPM will ask applicants to indicate whether they have this capacity and will take the applicants' responses into consideration when negotiating contracts.

Rating Factors (§ 800.202)

The proposed § 800.202 required MSPP issuers to comply with section 2701 of the PHS Act, as amended by the Affordable Care Act. We proposed in § 800.202(a) that MSPP issuers must comply with requirements setting standards for fair health insurance premiums appearing in HHS regulations. In addition, we proposed that MSPP issuers must follow standards set for rating areas in a State established under any HHS or State regulations implementing section 2701 of the PHS Act. OPM received numerous comments related to rating standards and factors from States, consumer organizations, and issuers.

Comments: Many commenters supported the general approach we proposed that MSPP issuers must comply with Federal standards and more narrow State standards for rating factors. A few commenters asked OPM to clarify the requirement that MSPP issuers use the age curves established under Federal regulations implementing section 2701(a), including that an MSPP issuer must also use any age curve established by a State pursuant to 45 CFR 147.103(e).

Response: We clarify that our intent is for an MSPP issuer to use any age curve established by a State pursuant to 45 CFR 147.103(e). In the event that a State does not establish an age curve, the MSPP issuer would use the standard age curve established by HHS. We are amending proposed § 800.202(c)(2) to reference State-established age curves.

Comments: A few commenters requested that OPM have MSPP issuers comply with PHS Act section 2705 and its implementing regulations on incentives for nondiscriminatory wellness programs in group health plans pursuant to 45 CFR parts 146 and 147, 29 CFR part 2590, and 26 CFR part 54.

Response: We agree with the commenters and their suggestion. Accordingly, we have added a paragraph (f) to § 800.202 to require MSPP issuers offering group health plans to comply with section 2705 of the PHS Act and any implementing Federal or State regulations. We believe this appropriately resolves the concerns of commenters.

Comments: Some commenters urged OPM to clarify how MSPP issuers will define ''family'' as it applies to coverage and rating. Specifically, commenters recommended OPM coordinate with HHS to ensure that the coverage and rating requirements established by HHS under section 2701 clearly apply to MSPs, adopt broad definitions for minimum categories for family policies, and adopt four types of family coverage categories: Individual; two adults; adult plus child(ren); and two-adult with child(ren) or other family composition.

Response: The proposed rule did not require specific standards around categories of family members, and intended to coordinate MSPP standards with HHS standards published at 45 CFR part 147. Therefore, the final rule does not specify the minimum categories of family members that must be rated in a family policy.

However, we encourage MSPs to provide the same benefits for all family compositions, including but not limited to same-sex domestic partners and their children. We note that individuals not eligible for family coverage will be able to purchase individual coverage on a guaranteed issue basis.

While we intend to administer the MSPP in a manner that supports a broad definition of family coverage categories, we are finalizing the proposed provision without a change. We must coordinate our approach in applying rating factors consistent with HHS guidance and State law, and as a result will implement the policy for extending coverage rules so that they apply to a broad definition of family coverage categories through the MSPP contract negotiation process.

Medical Loss Ratio (§ 800.203)

The proposed rule requires MSPP issuers to attain the medical loss ratio

(MLR) in section 2718 of the PHS Act. The proposed rule also codifies section 1334(a)(4) of the Affordable Care Act, which gives OPM the explicit authority to negotiate premiums, profit margins, and an MLR by allowing OPM to set an MSP-specific MLR that is either in the interest of MSP enrollees or conforms to State MLR standards. Failure to attain the MLR could result in intermediate sanctions, which include, but are not limited to, suspension of marketing, decertification in one or more States, or termination of an MSPP issuer's contract.

Comments: Several commenters expressed support for OPM's approach. Commenters supported an MLR calculation that was State-based, rather than nationwide. Commenters also supported pooling MSP and non-MSP experience in MLR calculation.

Response: OPM is retaining in the final rule its approach to have MSPP issuers calculate MLR on a State-by-State basis as well as pool MSP and non-MSP experience within a State.

Comments: Several commenters expressed concern that OPM having authority to set an MSP-specific MLR different from the State or Federal standard could give MSPs an advantage over QHPs.

Response: OPM recognizes the concerns of States and other stakeholders regarding authority to set an MLR standard for the MSPP. However, section 1334(a)(4)(B) of the Affordable Care Act explicitly grants OPM legal authority to negotiate an MLR with each MSP. As a matter of policy, however, OPM does not foresee exercising the authority to set an MSP-specific MLR. If OPM were to consider implementing an MSP-specific MLR, it would only be under extraordinary and rare circumstances, and after consulting with the State.

Comment: A commenter was concerned that OPM may decertify an MSP mid-year for failing to meet the applicable MLR standard.

Response: While OPM has the authority to decertify an MSP at any time, we do not want to disrupt State insurance markets or harm consumers. Decertifying an MSP is one of many compliance actions OPM proposed in the rule. We want to clarify that OPM would only decertify an MSP mid-year under unusual circumstances, such as widespread and repeated failure to comply with the legal or MSPP contractual requirements. Before decertifying an MSP, we would consult with a State and/or HHS, as appropriate, to avoid market disruption and protect consumers. Our approach to compliance actions is discussed in more detail in relation to § 800.404.

Comment: One commenter requested that MSPP issuers pay a rebate in addition to other MLR sanctions.

Response: MSPP issuers, like all health insurance issuers regulated by HHS, are subject to the MLR rebate requirements under the Affordable Care Act, and OPM will not require additional rebates.

Comment: One commenter wants MSPP user fees to qualify for MLR inclusion.

Response: This final rule clarifies in § 800.108 that MSPP user fees will be part of the State-based Exchange or Federally-facilitated Exchange user fee. According to technical guidance document CCIIO 2012–002, released April 20, 2012, by HHS, Exchange user fees are subtracted from premiums in the MLR calculation, as are all other Federal and State regulatory and licensing fees. MSPP user fees, therefore, will not be included in the MLR calculation.

We are adopting § 800.203 of the proposed rule as final, with one technical correction in paragraph (b), relating to the sanctions for not attaining the required medical loss ratio.

Reinsurance, Risk Corridors, and Risk Adjustment (§ 800.204)

The proposed § 800.204 would require MSPP issuer participation in the transitional reinsurance program in the individual market, risk adjustment program, and temporary risk corridors program to ensure that all issuers have the same fiscal responsibilities and protections. OPM proposed that MSPP issuers be required to participate in the transitional reinsurance program for the individual market established pursuant to section 1341 of the Affordable Care Act, and comply with HHS standards set forth in 45 CFR part 153 and, if applicable, any State regulations implementing the program. OPM also proposed that an MSPP issuer must participate in the temporary risk corridors program established pursuant to section 1342 of the Affordable Care Act and comply with 45 CFR part 153, as well as any additional HHS standards implementing the program. Finally, OPM proposed that an MSPP issuer must participate in the risk adjustment program established pursuant to section 1343 of the Affordable Care Act and comply with HHS standards set forth in 45 CFR part 153 and, if applicable, any State standards implementing the program.

Comments: The majority of the comments we received supported OPM's approach to requiring MSPP issuers to participate, like QHP issuers, in the transitional reinsurance program, risk adjustment program, and temporary risk corridors program. States, consumer organizations, and issuers supported the general approach OPM proposed that MSPP issuers must comply with Federal standards and State standards, if applicable, in the administration of the reinsurance program and risk adjustment program. One commenter suggested OPM has legal discretion to allow a church health plan offered through the MSPP to vary premiums to adjust for risk across its enrollees, using risk adjustment criteria related to Medicare Part D and Medicare Advantage plans.

Response: OPM appreciates the comments and is adopting the proposed regulation as final, with two technical corrections. First, in § 800.204(b), we are changing ''any applicable Federal or State regulations under that section'' to ''any applicable Federal regulations under that section'' because HHS will be operating the temporary risk corridors program. Second, we are correcting an editorial error in paragraph (c) of § 800.204 by changing ''An MSPP issuer must comply with participate in the risk adjustment program established pursuant to section 1343 of the Affordable Care Act'' to ''An MSPP issuer must comply with section 1343 of the Affordable Care Act''.

Finally, we do not agree with the commenter's analysis that OPM would have legal discretion to allow a church health plan offered through the MSPP to vary premiums to adjust for risk across its enrollees, using risk adjustment criteria related to Medicare Part D and Medicare Advantage plans. Therefore, we are not adopting this suggestion.

Subpart D—Application and Contracting Procedures

In subpart D of proposed 45 CFR part 800, OPM set forth proposed processes for accepting and evaluating applications to participate in the MSPP and for executing contracts to offer coverage under the MSPP. In general, these processes were designed based on OPM's experience in the operation of the FEHBP while reflecting the unique aspects of the MSPP, as directed in section 1334 of the Affordable Care Act. Subpart D includes sections relating to an application process, review of applications, MSPP contracting, term of the contract, contract renewal process, and nonrenewal. OPM received both general comments on this subpart and specific comments on several sections. We address first the general comments on the subpart, followed by comments on specific sections within the subpart.

Any regulatory changes are noted within the discussion of each section.

Comment: One commenter requested additional information on the application and contracting procedures, including form, manner, and timeline for submission and review of applications, contracting, and renewal of contracts.

Response: OPM has released a final paper application setting forth the information that we will collect from health insurance issuers that apply to become MSPP issuers, available on the Federal Business Opportunities Web site at *www.FBO.gov* under solicitation number OPM35–12–R–0006, Multi-State Plan Program. The final paper application was posted on January 18, 2013. The solicitation notes that OPM expects to begin receiving application material from issuers in February 2013, and instructs issuers to submit a notice of intent to apply to receive access to the MSPP Portal, through which issuers will submit the requested information to OPM electronically.

Due to the generally compressed deadlines for the first year of this program and the first years of operation of many Exchanges, timelines may vary from one year to the next. We therefore will not establish rigid timelines in this regulation, but will evaluate MSPP timelines and address them through guidance. Similarly, we intend to share additional information on initial execution and renewal of contracts through guidance.

Comments: A few commenters recommended that OPM incorporate States and Exchanges into the process of evaluating applicants and negotiating contracts with issuers. Specifically, commenters noted that some Exchanges will employ an ''active purchaser'' model, whereby QHP certification will depend on a contract between a QHP issuer and the Exchange, and recommended that OPM address this model in its application and contracting procedures. Other commenters voiced concern that the absence of State representation in application and contracting procedures, including evaluation of rate and benefit proposals, would result in inconsistent application of State insurance laws and regulations.

Response: OPM is directed by section 1334 of the Affordable Care Act to enter into contracts with health insurance issuers, and to do so in a manner similar to the manner in which contracting provisions under the FEHBP are implemented. The Affordable Care Act also provides for deemed certification of MSPs by virtue of an MSPP contract. We acknowledge that States will retain responsibility for the enforcement of their insurance laws and regulations, and we will continue to develop relationships with States' Departments of Insurance and Exchange authorities to collaborate to ensure that MSPs may be offered on Exchanges without creating market disruptions.

Based on the phased expansion provisions of section 1334 of the Affordable Care Act and of § 800.104 of this regulation, we do not expect each MSPP issuer to offer an MSP on each Exchange in 2014. We will communicate with appropriate State officials on an ongoing basis regarding the MSPs that we expect to certify.

Application and Contracting Procedures (§ 800.301)

In § 800.301, we proposed that a health insurance issuer may submit an application to OPM to participate in the MSPP. We specified that such applications would meet guidelines to be released regarding the form and manner of applications, and the timeline for submission. OPM received a few comments specifically addressing this section.

Comment: One commenter noted the absence of specific timeframes in the proposed regulation and requested that such timeframes allow each State to perform its ''traditional role'' in regulating health insurance products.

Response: As discussed in greater depth regarding subpart C of this regulation, OPM intends to collaborate with appropriate State officials regarding the review and approval of rates and benefits. We intend to be as flexible as possible to ensure that each State has adequate opportunity to review MSP documentation as appropriate.

Comment: One commenter recommended that OPM ensure that issuers' proprietary information be protected from information requests, including under the Freedom of Information Act (FOIA).

Response: We acknowledge that certain information given to OPM by applicant issuers may be proprietary, and should therefore not be subject to public inspection. Applicants will be given an opportunity to mark submitted information as confidential, pursuant to instructions that will accompany the application in the MSPP Portal, subject to the limits of FOIA and its implementing regulations.

OPM does not believe that any of these comments require any changes in the regulatory text. Therefore, we are adopting proposed § 800.301 as final, with no changes.

Review of Applications (§ 800.302)

Proposed § 800.302 provided that an issuer that has applied under § 800.301 may be accepted to enter into contract negotiations if OPM determines that the applicant meets the requirements of part 800; that OPM may request additional information from issuers in making such a determination; that OPM will inform the applicant in writing if OPM declines to enter into contract negotiations with the applicant; that OPM alone may determine whether an application is to be accepted or declined; and that a declined applicant may apply for a subsequent year. OPM received no specific comments on this section. Therefore, we are adopting proposed § 800.302 as final, with no changes.

MSPP Contracting (§ 800.303)

In proposed § 800.303, OPM provided that, to become an MSPP issuer, an applicant must execute a contract with OPM; that OPM would establish a standard contract for the MSPP; that OPM and an applicant would negotiate premiums for each plan year; that OPM would review for approval an applicant's benefit packages; that OPM may negotiate additional contractual terms and conditions; and that MSPP issuers would be certified to offer MSP coverage on Exchanges.

Comments: Several commenters recommended that I/T/Us be contractually allowed to participate in MSP networks as providers, and that MSPP issuers comply with Federal laws governing I/T/Us.

Response: OPM will address the specific terms of the MSPP standard contract through a development process following the publication of this final rule. We acknowledge the unique concerns of I/T/Us, and we intend to address them, to the extent practicable, through contractual terms.

Comment: One commenter recommended that OPM adopt for the MSPP the same transparency and pass-through pricing standards and requirements that exist under the FEHBP for PBMs.

Response: As noted above, OPM will address specific contract terms through a process following the publication of this rule. Such terms will include standards and requirements for PBMs.

Comments: A few commenters suggested that OPM's proposed contracting process would be duplicative of State regulatory or Exchange processes or would circumvent such processes. One commenter recommended that MSPP issuers be required to attest to compliance with all State laws as a

condition of certification. Another commenter recommended that issuers be required to attest to understanding and compliance with a specific State law as a condition of contracting. One commenter recommended that MSPP contracts incorporate consultation with State-based Exchanges to measure performance and compliance.

Response: In general, MSPP issuers will be expected to comply with State laws and regulations. Although we intend to monitor such compliance and to evaluate contract performance in part on such compliance, we decline to specifically list State laws with which issuers must comply. Specifically listing laws with which an issuer must comply may have the unintended result of implying that an issuer need not comply with unlisted laws and regulations, and OPM cannot list every relevant State law with which an MSPP issuer must comply.

We intend to promote information sharing between OPM and States, and OPM will measure MSP performance using standards similar to those measured under the FEHBP. Sharing information with States will help ensure that MSPs meet comparable standards to QHPs in the same markets and that issuers comply with State laws. By measuring contract quality assurance standards across MSPs, OPM will be able to ensure that MSPs are of comparably high quality across States. We will set forth the specific standards that MSPs will be expected to meet in the model MSPP contract.

We are adopting proposed § 800.303 as final, with the inclusion of a minor editorial correction.

Term of the Contract (§ 800.304)

In § 800.304, we proposed that the term of an MSPP contract be for a period of at least 12 consecutive months, as set forth in the MSPP contract; that a plan year be a consecutive 12-month period during which an MSP provides coverage for health benefits; and that a plan year may be a calendar year or other 12-month period.

Comment: One commenter recommended that the term of the MSPP contract coincide with the calendar year so that MSP plan years and open enrollment periods would coincide with those of QHPs, which would preserve a level playing field.

Response: In § 800.20, we are adopting the definition of ''plan year'' established by HHS at 45 CFR 155.20. Section 800.101 states that MSPs will comply with the same standards for eligibility, enrollment, and termination of coverage as QHPs on the same Exchange. Open enrollment periods for MSPs, therefore, will coincide with those of QHPs.

Comment: One commenter recommended that OPM adopt an initial contract term of 3 to 5 years, rather than 1 year.

Response: We acknowledge that participation in the MSPP may require significant initial investment on the part of MSPP issuers, and that a longer contract term may assure issuers that such investment may require several years of participation in the program to become cost-effective. OPM has modeled the application and contracting procedures in subpart D after those used in the FEHBP, including the automatically renewable nature of contracts. We anticipate that all MSPP issuers will participate in the program for many contract terms. However, rates and benefits will be revised each year, and some terms of the MSPP contract may need to be updated from one term to the next. Therefore, the contract term will be 1 year.

We are adopting proposed § 800.304 as final, with no changes.

Contract Renewal Process (§ 800.305)

In proposed § 800.305, we set forth a process by which OPM and an MSPP issuer would renew an MSPP contract, including the issuer's submission of information to OPM and criteria for a determination by OPM of whether to renew the contract. This section also provides that if OPM and the issuer fail to agree to premiums and/or benefits with respect to an MSP on an Exchange, the contract may nevertheless be renewed with the same premiums and benefits in effect for the previous term. OPM received no comments directly addressing this section. Therefore, we are adopting proposed § 800.305 as final, with no changes.

Nonrenewal (§ 800.306)

In § 800.306, we proposed that either OPM or an issuer could decline to renew an MSPP contract at the end of a plan year by timely notifying the other party and MSP enrollees.

Comments: Some commenters recommended lengthening the period of notice to enrollees of nonrenewal from 90 days to 180 days.

Response: OPM proposed that issuers would be required to notify enrollees of nonrenewal of an MSPP contract no fewer than 90 days prior to the date on which coverage would end. The proposed 90-day period was taken from the same requirement in the FEHBP. Conversely, Exchanges may have notice periods as short as 30 days. As noted at § 800.306(c), the 90-day requirement would only take effect in the absence of an Exchange rule requiring a different notice period.

Comments: Some commenters recommended that OPM require issuers to assist MSP enrollees who will lose their coverage to find new coverage. One commenter recommended that OPM defer to a determination by the Centers for Medicare and Medicaid Services that a QHP issuer must continue to offer coverage outside of an Exchange.

Response: Enrollment of individuals in QHPs following nonrenewal of an MSPP contract falls outside of the responsibilities set forth at section 1334 of the Affordable Care Act. However, as noted throughout this regulation, we look forward to working collaboratively with States and Exchanges to best serve consumers, including by ensuring cooperation with efforts to assist enrollees who lose MSP coverage.

Comments: A few commenters recommended that OPM clarify the language of paragraph (c) to require issuers to comply with any State law requirements relating to nonrenewal of coverage and withdrawal from an Exchange market.

Response: Proposed § 800.306(c) states that an MSPP issuer must comply with ''any requirements imposed by an Exchange with respect to the termination of a QHP * * *'' Such requirements would include a State law requirement relating to nonrenewal of coverage or withdrawal from an Exchange market. Therefore, no change to § 800.306 is necessary.

Comment: One commenter noted that § 800.404(d), like § 800.306(c), addresses notice to enrollees who will lose coverage due to an MSP ceasing to be offered on an Exchange, and recommended using the same language in both sections.

Response: We agree that the language should be the same in both sections.

OPM is adopting proposed § 800.306 as final, with one change. Paragraph (c) will be revised as follows, to include a technical, clarifying edit: ''The MSPP issuer's written notice of nonrenewal must be made in accordance with its MSPP contract with OPM. The MSPP issuer also must comply with any requirements regarding the termination of a plan that are applicable to a QHP offered on an Exchange on which the MSP was offered, including a requirement to provide advance written notice of termination to enrollees. If an Exchange does not have requirements about advance written notice of termination to enrollees, the MSPP issuer must inform current MSP enrollees in writing of the nonrenewal of the MSP no later than 90 days prior

to termination of coverage, unless OPM determines that good cause justifies less than 90 days' notice.'' We will also revise § 800.404(d) to mirror this language.

Subpart E—Compliance

In subpart E of the proposed rule, OPM set forth standards and requirements with which MSPP issuers must comply and a non-exhaustive list of actions OPM may take to enforce provisions of an MSPP contract. Like subpart D, these standards, requirements, and compliance actions have been designed based on OPM's experience in the operation of the FEHBP, while reflecting the unique aspects of the MSPP, as required by section 1334 of the Affordable Care Act. Subpart E addresses contract performance, contract quality assurance, fraud and abuse, compliance actions, and a process for reconsideration of compliance actions. OPM received both general comments on this subpart and specific comments on several sections. We address first the general comments on this subpart, followed by comments on specific sections within this subpart. Any regulatory changes are noted within the discussion of each individual section.

Commenters on this subpart included States and State Exchange authorities, plan/issuer associations, consumer advocacy organizations, and a public policy advocacy organization. Comments on this subpart generally supported the overall structure of contract compliance under the MSPP, and several offered specific suggestions for improvement. We received one comment regarding cost accounting systems that is outside the scope of this rulemaking.

Comments: Some commenters recommended adding specific requirements, such as network adequacy, to one of the sections of this subpart as a contract performance standard, a contract quality assurance standard, or a basis for a compliance action.

Response: OPM acknowledges the importance of requirements and consumer protections like network adequacy, and addressed network adequacy in § 800.109 of the proposed rule. We have set forth other provisions in this regulation that we intend to enforce through contractual measures and compliance actions; this subpart is structured to provide OPM the authority to do so in a manner similar to the administration of the FEHBP. In particular, § 800.404(a)(1) lists as a cause for OPM to impose a compliance action a failure by the MSPP issuer to meet the requirements of § 800.401(a), which includes any violation of section 1334 of the Affordable Care Act or these regulations. Therefore, a violation of network adequacy standards, or any other MSPP standard or requirement, would constitute cause for a compliance action.

Comments: A few commenters recommended that review of financial resources, records, novation and change of name agreements, and claims processing practices be left solely to States, and that OPM rely on States to communicate findings regarding these matters. One commenter noted States' experience in measurements of these kinds. Another commenter recommended establishing a notice and communication process between OPM and the States and Exchanges to ensure MSPP issuers comply with State laws as well as OPM's standards and requirements.

Response: We acknowledge States' expertise in measuring performance and compliance, and, as noted above in our responses to comments on subpart D, we look forward to working with States to ensure compliance and comparability within States as well as across States. We also note that OPM has more than 50 years of experience administering the FEHBP, which includes measurement of numerous performance standards, contract quality assurance measures, and compliance actions. Section 1334 of the Affordable Care Act directs OPM to implement this program in a manner similar to the manner in which the contracting provisions of the FEHBP are implemented, which includes the compliance measures set forth in subpart E.

Contract Performance (§ 800.401)

In proposed § 800.401, we set forth requirements for MSPP issuers, including that the issuer must comply with section 1334 of the Affordable Care Act and with the provisions of this regulation; that it must meet minimum threshold issuer standards; that it must demonstrate specified prudent business practices; that it must not engage in specified poor business practices; and that OPM may collect an assessment to a performance escrow account. OPM received several comments specifically addressing this section.

Comment: One commenter recommended that these regulations reflect OPM's commitment to the protection of enrollees' private and confidential information. Specifically, the commenter recommended that we require issuers to comply with Fair Information Practice Principles by listing failure to comply with such Principles as a poor business practice.

Response: We appreciate the need to protect private and confidential information in the MSPP. Personally identifiable information (PII) and protected health information (PHI) are protected by the Health Insurance Portability and Accountability Act (HIPAA) and the Privacy Act of 1974, as well as contractual provisions that will mirror those used under the FEHBP. By ensuring compliance with these laws and provisions, OPM will adequately protect PII and PHI.

Comments: Several commenters recommended adding to the list of ''poor business practices'' failure to properly pay I/T/Us in compliance with 25 U.S.C. 1621e and the cost-sharing protections under section 1402 of the Affordable Care Act.

Response: The list of ''poor business practices'' does not include failures to comply with specific laws. This regulation, at § 800.102, addresses compliance with Federal and State laws. Section 800.404(a)(4) permits OPM to impose a compliance action for any violation of law or regulation. We will address compliance more specifically in the terms of MSPP contracts.

Comment: One commenter interpreted the list of ''poor business practices'' to include innovative payment arrangements or delivery models such as Accountable Care Organizations (ACOs) or Patient-Centered Medical Homes (PCMHs), and recommended that such models not be prohibited.

Response: The list of ''poor business practices'' does not address health care delivery models. The list includes ''[e]ntering into contracts or employment agreements * * * that include provisions or financial incentives that directly or indirectly create an inducement to limit or restrict communication about medically necessary services to any individual covered under the MSPP.'' Limitation of communication about medically necessary services to enrollees is not an innovative payment arrangement or delivery model, and is not a feature of an ACO or PCMH.

Comments: A few commenters recommended against requiring issuers to contribute to a performance escrow account. One commenter requested clarification that OPM's proposal to reserve authority to require MSPP issuers to contribute to a performance escrow account is limited to MSPP issuers, presumably as opposed to QHP issuers; that contributions would be based on premiums rather than a flat fee; that contributions be assessed at the

beginning of the year; and that any refunds be remitted to consumers similarly to MLR rebates.

Response: We continue to explore establishing a performance escrow account to use in enforcement of MSPP contracts. OPM may develop more specific policies to begin using such an account no sooner than 2015. We will issue specific guidance on the operations of a performance escrow account well in advance of the date on which it takes effect.

We are adopting proposed § 800.401 as final, with no changes except for minor technical edits.

Contract Quality Assurance (§ 800.402)

In proposed § 800.402, we set forth general policies and procedures to ensure that MSPP contracts conform to quality standards and requirements, specifically with respect to the issuer's internal controls and performance standards to be set by OPM.

Comment: One commenter recommended that OPM require MSPP issuers to meet and comply with States' quality assurance standards and requirements. The commenter suggested that OPM ensure such compliance by requiring MSPP issuers to contract with each State, in addition to contracting with OPM, or by inserting regulatory text.

Response: As noted throughout our responses to comments, we appreciate the need for coordination with States to ensure that MSPs are comparable to a QHP offered on the same Exchange. Requiring MSPP issuers to enter into a contract with Exchanges would circumvent section 1334(d) of the Affordable Care Act, which vests certification authority for MSPs in OPM rather than State Exchanges by providing that MSPs offered under a contract with OPM are deemed to be certified by an Exchange. We intend to hold MSPs to performance standards that are comparable to those set for QHPs by States and Exchanges. OPM will establish and enforce these standards through contractual negotiation and compliance.

We are adopting proposed § 800.402 as final, with no changes.

Fraud and Abuse (§ 800.403)

In proposed § 800.403, we required MSPP issuers to maintain a program to assess and address vulnerabilities to fraud and abuse, to maintain a system to detect and eliminate fraud and abuse, and to provide certain information to OPM. One commenter specifically addressed this section, requesting further information on the required fraud detection system. We intend to set forth specific standards and requirements for systems to detect and eliminate fraud and abuse in the model MSPP contract. This does not require a change in the proposed rule; therefore, we are adopting § 800.403 of the proposed regulation as final, with no changes.

Compliance Actions (§ 800.404)

In § 800.404 of the proposed rule, we set forth the bases for OPM to impose a compliance action; the compliance actions that OPM may impose; the notices that OPM will send to issuers upon imposition of a compliance action; and the notices that issuers must send to enrollees upon imposition of certain compliance actions.

Comment: One commenter noted that mid-year decertification of MSPs may disrupt markets and harm consumers and recommended that OPM clarify that such a compliance action would be used only when it is strictly necessary.

Response: We agree that mid-year decertification creates potential for disruption, and OPM would only terminate or decertify an MSP if, in the discretion of the Director, such action was necessary. However, compliance actions are discretionary, so the regulatory text need not be modified to reflect that those particular compliance actions would not be routinely imposed.

Comment: One commenter recommended using State performance evaluations in reviewing MSP performance and developing processes to communicate with States and Exchanges regarding compliance actions.

Response: As noted above, we look forward to working with States and Exchanges to ensure that MSPs meet appropriate standards within States and across States. Because some compliance actions directly affect Exchange markets, we agree that Exchanges should receive notice of such compliance actions. Specifically, regulatory text will be amended to provide that OPM will notify State and/or Exchange officials when we reduce the service area or areas of an MSP in the State, withdraw certification for an MSP in the State, decline to renew the MSPP contract under which an MSP is offered in the State, or terminate the MSPP contract under which an MSP is offered in the State.

Section 800.404 of the proposed rule is adopted as final, with two changes:

First, the following new paragraph will be added after paragraph (c)(2): ''(3) Upon imposition of a compliance action listed in paragraphs (b)(2)(iv) through (b)(2)(vii) of this section, OPM must notify the State Insurance Commissioner(s) and Exchange officials in the State or States in which the compliance action is effective.''

Second, pursuant to a comment on subpart D of this regulation, we are inserting language in paragraph (d) of this section to add clarity and to conform to the wording of § 800.306(c), which sets forth a similar notice requirement. The revised paragraph (d) will read as follows: ''If OPM terminates an MSPP issuer's MSPP contract with OPM, or OPM withdraws the MSPP issuer's certification to offer the MSP on an Exchange, the MSPP issuer must comply with any requirements regarding the termination of a plan that are applicable to a QHP offered on an Exchange on which the MSP was offered, including a requirement to provide advance written notice of termination to enrollees. If an Exchange does not have requirements about advance written notice of termination to enrollees, the MSPP issuer must inform current MSP enrollees in writing of the nonrenewal of the MSP no later than 90 days prior to termination of coverage, unless OPM determines that good cause justifies less than 90 days' notice.''

Reconsideration of Compliance Actions (§ 800.405)

In proposed § 800.405, we set forth the right of an MSPP issuer to request reconsideration of the imposition of certain compliance actions, the form and manner of such a request, and OPM's notice to the issuer of a decision upon reconsideration. One commenter specifically addressed this section, recommending that OPM notify States of requests for reconsideration under this section. As noted above, we intend to communicate extensively with States and Exchanges to ensure that MSPs meet appropriate standards. No change is needed in the wording of proposed § 800.405; therefore, we are adopting it as final, with no changes.

Subpart F—Appeals by Enrollees for Denials of Claims for Payment or Service

In subpart F, we proposed a process by which MSP enrollees (and individuals acting on behalf of enrollees) could seek an internal appeal and external review of an adverse benefit determination. The proposed subpart included sections on general requirements, MSPP issuer internal claims and appeals processes, MSPP issuer internal claims and appeals timeframes and notice of determination, external review, and judicial review. The proposed regulation adopted the standards and timeframes established under section 2719 of the PHS Act, and

will be administratively similar to the disputed claims process employed within the FEHBP. By adopting the standards and timeframes applicable to health insurance issuers under the PHS Act, we proposed to provide MSP enrollees with comparable processes to those that will apply to QHPs and other coverage. In particular, the MSPP external review process will include binding final decisions by independent review organizations (IRO) on enrollee disputes that involve medical judgment (including, but not limited to, those based on medical necessity, appropriateness, health care setting, level of care, or effectiveness of a covered benefit). The preamble to our proposed rule noted that we intend to issue further guidance explaining the details of these processes.

As indicated in the proposed rule, OPM has considerable experience in resolving disputed claims pursuant to OPM's statutory authority under 5 U.S.C. 8902(j). Claims disputed by FEHBP enrollees, generally governed by 5 CFR 890.105, are first submitted to FEHBP carriers for an internal level of reconsideration, and FEHBP carriers are required to comply with the same timeframes that are contained in section 2719 of the PHS Act. OPM then externally reviews any FEHBP carrier reconsideration decisions that enrollees submit for OPM's review—including decisions related to medical judgment, as well as decision related to interpretation of contract coverage. This process is central to OPM's contractual oversight of FEHBP carriers, allowing OPM to determine whether the health plan's daily operations are functioning appropriately and whether the plan's benefits are meeting enrollees' needs, which informs the following benefit negotiation cycle. OPM reviews claims efficiently; in 2012, 97 percent of all FEHB disputed claims reviewed by OPM were resolved by OPM within 60 days of being received.

Accordingly, in addition to engaging an independent review organization for final, binding decisions on MSPP claims disputes involving medical judgments, we have designed the external review process for the MSPP to accommodate final, binding decisions by OPM on claims disputes involving interpretation of contract coverage that does not involve medical judgments.

Commenters on this subpart included States, Exchanges, State associations, consumer groups, provider groups, pharmaceutical companies, and plan and issuer groups. Several comments were generally supportive of the proposed approach, whereas some commenters generally preferred specific compliance with each separate State process in each State. Some commenters expressed support for the adoption of the standards and timeframes applicable under section 2719 of the PHS Act. A few commenters recommended specific changes. Below, we address first the general comments on the approach proposed in this subpart, followed by the specific content of each section of the final regulation.

Comments: Some commenters suggested that consumers would be confused by OPM's approach, noting that MSPs in some States would seek an internal appeal or external review by following a different process than a QHP on the same Exchange. A few commenters recommended that notices to enrollees include contact information for Consumer Assistance Programs (CAPs) or Ombudsman offices available to assist consumers in filing appeals.

Response: We believe the proposed process adequately addresses the potential for confusion in several ways. First, MSP issuers must comply with the internal claims and appeals process under 45 CFR 147.136(b). Regarding external review, MSP enrollees would send any request for external review, whether of a determination based on medical judgment or otherwise, to OPM. Some processes may call for resolution of medical judgment determinations separately from, for example, determinations of whether a benefit is covered under a plan. OPM plans to ensure that this process will be explained clearly in plan documents and enrollee notices. Second, the process will be administratively operated based on the existing disputed claims process under the FEHBP. We have operated this process for more than 35 years across the country, alongside health coverage that has been subject to different appeals processes, (for example, separate processes applicable to ERISA plans, commercial insurance products, non-Federal governmental plans, or church plans). OPM has nevertheless guided consumers through the disputed claims process. Finally, we will ensure that notices to enrollees are accessible and meet the standards established under section 2719 of the PHS Act and its implementing regulations.

We agree that notices should include contact information for CAPs and Ombudsman offices. Proposed §§ 800.502 and 800.503 state that MSPP issuers must comply with 45 CFR 147.136(b), which includes the following provision at § 147.136(b)(2)(ii)(E)(4): issuers ''must disclose the availability of, and contact information for, any applicable office of health insurance consumer assistance or ombudsman established under PHS Act section 2793 to assist individuals with the internal claims and appeals and external review processes.''

Comments: Some commenters objected to the proposed process in general, preferring instead that MSP enrollees be limited to the processes available in their State. A few of those commenters suggested that the proposed approach may trigger the ''level playing field'' provision at section 1324 of the Affordable Care Act, as discussed under § 800.115 of this regulation.

Response: As noted in the preamble to the proposed rule, our primary objectives in establishing the internal appeals and external review processes are to ensure that (1) enrollees have adequate access to review of adverse benefit determinations and (2) OPM collects the information necessary for the enforcement of MSPP contracts and implementation of the program. We consider both objectives integral to the implementation of the MSPP, and therefore required under section 1334 of the Affordable Care Act.

We have addressed the applicability of the ''level playing field'' provision in our responses to comments relating to § 800.115 of this regulation. As explained in that discussion, our approach to external appeals will not trigger the level playing field provision because MSPP issuers will be subject to the same rules as other issuers: Section 2719 of the PHS Act and its implementing regulations.

Comments: A few commenters recommended that OPM require MSPP issuers to comply with our proposed process unless a State's process is more protective, in which case the more protective State provisions would take effect for MSP enrollees.

Response: Our proposed process protects consumers by allowing us to ensure that all MSP enrollees are able to seek review of a broad range of determinations, and that requests for external review are resolved consistently across the States. Although States' appeals processes, in many cases, offer a different approach to consumer protection, we believe that our processes provide a comparable or greater degree of protection, which would apply uniformly across the States for MSP enrollees.

Comments: A few commenters noted that State regulatory agencies often use external review as a means of ascertaining information regarding compliance with laws and regulations, and recommended that we therefore decline to establish a process that would preclude States' collection of such

information. Of those commenters, two suggested that States provide OPM with data and information to use for the MSPP, and one requested that OPM develop a process to share information with States and Exchanges to facilitate enforcement of State laws and standards.

Response: As noted above, OPM intends to use these processes to monitor and enforce MSPP contracts. We consider our ability to resolve disputes arising under MSPP contracts integral to our implementation of this program. However, we recognize that external review data and information may also be important to State regulatory agencies and Exchanges, and we intend to share information collected through this process, to the extent that it is legally and operationally feasible, with States and Exchanges. We look forward to working in collaboration with States and Exchanges to ensure that the appropriate information is shared seamlessly.

General Requirements (§ 800.501)

In this section, we set forth definitions, and provide that an MSP enrollee or a person acting on behalf of an MSP enrollee may seek review of an adverse determination under this program. We are adopting proposed § 800.501 as final, with no changes.

MSPP Issuer Internal Claims and Appeals Processes (§ 800.502) and MSPP Issuer Internal Claims and Appeals Timeframes and Notice of Determination (§ 800.503)

In § 800.502, we provided that an MSPP issuer must comply with internal claims and appeals processes applicable under 45 CFR 147.136(b). In § 800.503, we provide that an MSPP issuer must comply with notice requirements under 45 CFR 147.136(b) and (e) upon rendering a determination on a claim under § 800.502. We are not making any substantive changes in these sections; however, because they are so closely related, we have decided to combine §§ 800.502 and 800.503 into a single section numbered 800.502, with paragraph (a) of § 800.502 containing the content of proposed § 800.502, and paragraph (b) of § 800.502 containing the content of proposed § 800.503.

External Review (§ 800.504)

In § 800.504, we proposed an external review process under which OPM would conduct external review of adverse benefit determinations under the MSPP, enrollees would receive notices pursuant to 45 CFR 147.136(e), and MSPP issuers would be required to pay a claim or provide a service pursuant to a final decision by OPM or an IRO. In the proposed rule, we referred to the State external review process under standards in paragraph (c)(2) of the appeals regulation, 45 CFR 147.136(c)(2). The standards outlined in paragraph (c)(2), however, expressly apply only to a State external review process, and would be inconsistent with the national approach OPM was proposing. OPM's national approach more appropriately falls under 45 CFR 147.136(d). We therefore wish to clarify that we intended the State external review standards in paragraph (c)(2) to serve as a model for the consumer protections that OPM would incorporate into its proposed external review process. Accordingly, the change in citation from 45 CFR 147.136(c)(2) to 45 CFR 147.136(d) has been made.

Judicial Review (§ 800.505)

In proposed § 800.505, we provided that OPM's written decision pursuant to completed external review of an adverse benefit determination would constitute final agency action under the Administrative Procedure Act, and that review of such a decision in the appropriate U.S. district court would be limited to the record that was before OPM when it made its decision. We are adopting proposed § 800.505 as final, with one change, and renumbering it as § 800.504. Although OPM will conduct external review under the MSPP, final decisions on adverse benefit determinations related to medical judgment will be made by IROs, in accordance with section 2719 of the PHS Act. Decisions made by IROs will be final, and OPM will not be responsible for their approval. Such decisions therefore cannot be considered final agency action. The regulation will provide that a decision by an IRO on external review of an adverse benefit determination related to medical judgment will not be considered final agency action.

Subpart G—Miscellaneous

Reservation of Authority (§ 800.601)

We received no comment on this section of the proposed rule, which simply provides that OPM reserves the right to implement and supplement its regulations with written operational guidelines. Therefore, we are adopting this section as final, with no changes.

Consumer Choice With Respect to Certain Services (§ 800.602)

Section 800.602 of the proposed rule requires that at least one MSP on each Exchange not offer services described at section 1303(b)(1)(B)(i) of the Affordable Care Act. Further, MSPs in States that prohibit these services must comply with State law.

Comments: Several commenters expressed concern that OPM is proposing to preempt State law regarding coverage of services described in section 1303(b)(1)(B)(i) of the Affordable Care Act. Some commenters expressed a preference that at least one MSP in each Exchange be required to provide coverage for these services. In particular, there was concern that, since FEHBP plans do not generally cover services described at section 1303(b)(1)(B)(i), the FEHBP benchmark plan would exclude these services for an MSP. One commenter was concerned that requiring enrollees to make separate payments for these services would be burdensome.

Response: OPM is complying with section 1334(a)(6) of the Affordable Care Act, which directs that at least one of the MSPs in a State not offer services described in section 1303(b)(1)(B)(i). If an MSP is offered in a State that requires coverage of the services described in section 1303(b)(1)(B)(i), OPM will discuss options for compliance with State and Federal laws in contract negotiations with MSPP applicants. Although an FEHBP benchmark would not include services described in section 1303(b)(1)(B)(i), MSPP issuers can include services permitted by law as long as the EHB benefits are substantially equal. OPM will require MSPs to comply with HHS rules about segregation of funds as described in 45 CFR part 156.

We are adopting as final proposed subpart G, with a technical correction to § 800.602, which included an incorrect reference to the Affordable Care Act provision describing the services in section 1303(b)(1)(B)(i).

Executive Orders 13563 and 12866; Regulatory Review

OPM has examined the impact of this rule as required by Executive Order 12866 on Regulatory Planning and Review (September 30, 1993) and Executive Order 13563 on Improving Regulation and Regulatory Review (January 18, 2011). Executive Orders 12866 and 13563 direct agencies to assess all costs and benefits of available regulatory alternatives and, if regulation is necessary, to select regulatory approaches that maximize net benefits (including potential economic, environmental, public health and safety effects, distributive impacts, and equity). A regulatory impact analysis must be prepared for major rules with economically significant effects ($100 million or more in any one year,

adjusted for inflation). Section 3(f) of Executive Order 12866 defines a ''significant regulatory action'' as an action that is likely to result in a rule that may:

(1) Have an annual effect on the economy of $100 million or more in any one year or adversely affect in a material way a sector of the economy, productivity, competition, jobs, the environment, public health or safety, or State, local, or tribal government or communities;

(2) Create a serious inconsistency or otherwise interfere with an action taken or planned by another agency;

(3) Materially alter the budgetary impacts of entitlement grants, user fees, or loan programs, or the rights and obligations of recipients thereof; or

(4) Raise novel legal or policy issues arising out of legal mandates, the President's priorities, or the principles set forth in Executive Order 12866.

The economic impact of this rule may exceed the $100 million threshold for at least one year; we therefore assess costs and benefits as required by the Executive order.

This rule gives health insurance issuers the opportunity to contract with OPM to offer a product on the Affordable Insurance Exchanges, but does not require those issuers to outlay funds. In 2013, the Congressional Budget Office (CBO) and the Joint Committee on Taxation (JCT) estimated the effects of the Affordable Care Act on nationwide insurance enrollment and on the Federal budget.[5] CBO and JCT estimated that from 2016 on, between 24 million and 27 million people will receive individually purchased coverage through the Exchanges, and another 3–4 million people will receive employment-based coverage through the Exchanges. In the preamble to the proposed rule, we noted that OPM lacks the information necessary to make assumptions about the potential enrollment penetration for MSPs on the Exchanges. We sought comments on the number of States where MSPs will participate and the influence of current market dynamics on enrollment in MSPs, but received none. As we have not yet begun contract negotiations or closed the application process, we do not have any more information on projected enrollment than we had at the time of the proposed rule. As such, this analysis will continue to largely reflect qualitative analysis, with quantitative analysis where possible.

One primary benefit of health insurance coverage would be an increase in longevity or health for newly-enrolled individuals. Improved access to health care services has been shown to lead to higher use of preventive services and health improvements, such as reduced hypertension, improved vision and better self-reported health status, as well as better clinical outcomes and lower mortality.[6] [7]

Additional benefits would be generated for newly-enrolled individuals in the form of improved financial security. There is evidence that bankruptcy filings, for instance, decrease in response to increases in Medicaid eligibility.[8] Furthermore, a 2011 analysis by the Office of the Assistant Secretary for Planning and Evaluation (ASPE) found that most of the uninsured were unable to afford a single hospitalization, because 90 percent of the uninsured reported having total financial assets below $13,000.[9] A related benefit would be generated by increased access to non-employment-based health insurance, which can give individuals greater flexibility to take positions that better match their skills or interests.

Expansion of health insurance coverage leads to many benefits, such as improved access to health care and improved financial security for the newly insured. However, insurance coverage can lead to increased utilization of health services for individuals who become newly insured. While a portion of this increased utilization may be economically inefficient, studies that estimated the effects of Medicare found that the cost of this inefficiency is likely more than offset by the benefit of risk reduction.[10] [11]

Administrative costs of the rule would be generated both within OPM and by issuers deciding to offer MSPs. The costs that MSPP issuers may incur are the same as those of QHPs and, as stated in 45 CFR part 157, will include accreditation, network adequacy standards, and quality improvement strategy reporting. The costs associated with MSP certification offset the costs that issuers would face were they to be certified by the State, or HHS on behalf of the State, to offer QHPs through the Exchange.

Finally, some of the most notable effects of Exchanges in general, and MSPs in particular, may not be net social costs or benefits, but would instead be transfers between members of society—in particular, decreases in uncompensated care.

OPM lacks data to quantify most of these benefits, costs and transfers. Perhaps most notably, OPM cannot isolate the effects of MSPs from forecasts of the overall effects of the Affordable Care Act coverage provisions. We requested comments on our cost-benefit analysis, but received no comments.

Paperwork Reduction Act

The Paperwork Reduction Act of 1995 (44 U.S.C. chapter 35; see 5 CFR part 1320) requires that OMB approve all collections of information by a Federal agency from the public before they can be implemented. Respondents are not required to respond to any collection of information unless it displays a current valid OMB control number. OPM will have several collections from MSPP issuers or applicants seeking to become MSPP issuers, but we have determined that they are exempt from the requirements of the Paperwork Reduction Act. For example, we seek to collect information in connection with the MSPP application process and reporting requirements under § 800.112. We are also requiring issuers to authorize accrediting entities to send documentation to OPM under § 800.111. We are setting up a process under

[5] Congressional Budget Office, *Effects of the Affordable Care Act on Health Insurance Coverage—February 2013 Baseline,* available at *http://www.cbo.gov/publication/43900* (February 5, 2013).

[6] Brook, Robert H., John E. Ware, William H. Rogers, Emmett B. Keeler, Allyson Ross Davies, Cathy D. Sherbourne, George A. Goldberg, Kathleen N. Lohr, Patricia Camp and Joseph P. Newhouse. *The Effect of Coinsurance on the Health of Adults: Results from the RAND Health Insurance Experiment.* Santa Monica, CA: RAND Corporation, 1984. Finkelstein, A. et al. ''The Oregon Health Insurance Experiment: Evidence from the First Year.'' *NBER Working Paper* No. 17190, July 2011. Doyle, J.J. ''Health Insurance, Treatment and Outcomes: Using Auto Accidents and Health Shocks.'' National Bureau of Economic Research. *NBER Working Paper* No. 11099, February 2005.

[7] See the regulatory impact analysis developed by HHS for the Exchange Establishment final rule, available at *http://cciio.cms.gov* under ''Regulations and Guidance'', for a comprehensive overview of the empirical evidence on the benefits of enhanced availability of quality, affordable health insurance, which to great extent applies to the MSPP program and this proposed rule as well.

[8] Gross, T., Notowidigdo, M. ''Health Insurance and the Consumer Bankruptcy Decision: Evidence from Medicaid Expansions.'' *Journal of Public Economics* 95 (7–8): 2011.

[9] Assistant Secretary for Planning and Evaluation The Value of Health Insurance: Few of the Uninsured Have Adequate Resources to Pay Potential Hospital Bills: 2011. Washington, DC: U.S. Department of Health and Human Services.

[10] Finkelstein, A, McKnight R: ''What Did Medicare Do? The Initial Impact of Medicare on Mortality and Out Of Pocket Medical Spending '' Journal of Public Economics 2008, 92:1644–1668.

[11] Finkelstein, A., ''The Aggregate Effects of Health Insurance: Evidence from the Introduction of Medicare,'' National Bureau of Economic Research. Working Paper No. 11619, Sept, 2005.

§ 800.116 for States to request that OPM reconsider a standard applicable to MSPs or MSPP issuers that does not comply with that State's laws for QHPs. Under § 800.503, MSPP issuers are directed to provide certain written notices, which are third-party disclosures under the Paperwork Reduction Act. These collections would generally be considered reporting requirements under the Paperwork Reduction Act. Moreover, based on responses to the RFI, subsequent conversations with both responding health insurance issuers and other health insurance issuers subsequent to the RFI, and other practical considerations, OPM expects fewer than ten responsible entities to respond to all of the collections noted above. For that reason alone, the collections are exempt from the Paperwork Reduction Act under 44 U.S.C. 3502(3)(A)(i). There may also be other reasons why these collections are exempt from these requirements. We sought comments on these assumptions but received none.

Regulatory Flexibility Act

The Regulatory Flexibility Act (RFA) [12] requires agencies to prepare an initial regulatory flexibility analysis to describe the impact of the final rule on small entities, unless the head of the agency can certify that the rule would not have a significant economic impact on a substantial number of small entities. The RFA generally defines a ''small entity'' as (1) a proprietary firm meeting the size standards of the Small Business Administration (SBA); (2) a not-for-profit organization that is not dominant in its field; or (3) a small government jurisdiction with a population of less than 50,000. States and individuals are not included in the definition of ''small entity.''

The RFA requires agencies to analyze options for regulatory relief of small businesses, if a rule has a significant impact on a substantial number of small entities. For purposes of the RFA, small entities include small businesses, small non-profit organizations, and small government jurisdictions. Small businesses are those with sizes below thresholds established by the SBA. With respect to health insurers, the SBA size standard is $7.0 million in annual receipts.[13]

OPM does not think that small businesses with annual receipts less than $7.0 million would likely have sufficient economies of scale to become MSPP issuers or be part of a group of MSPP issuers. Similarly, while the Director must enter into an MSPP contract with at least one non-profit entity, OPM does not think that small non-profit organizations would likely have sufficient economies of scale to become MSPP issuers or be part of a group of MSPP issuers.

OPM does not think that these regulations will have a significant economic impact on a substantial number of small businesses with annual receipts less than $7.0 million, because there are only a few health insurance issuers that could be considered small businesses. Moreover, while the Director must enter into an MSPP contract with at least one non-profit entity, OPM does not think that these regulations will have a significant economic impact on a substantial number of small non-profit organizations, because few health insurance issuers are small non-profit organizations.

OPM incorporates by reference previous analysis by HHS, which provides some insight into the number of health insurance issuers that could be small entities. Particularly, as discussed by HHS in the Medical Loss Ratio interim final rule (75 FR 74918), few, if any, issuers are small enough to fall below the size thresholds for small business established by the SBA. In that rule, HHS used a data set created from 2009 NAIC Health and Life Blank annual financial statement data to develop an updated estimate of the number of small entities that offer comprehensive major medical coverage in the individual and group markets. For purposes of that analysis, HHS used total Accident and Health earned premiums as a proxy for annual receipts. HHS estimated that there are 28 small entities with less than $7 million in accident and health earned premiums offering individual or group comprehensive major medical coverage. OPM concurs with this HHS analysis, and, thus, does not think that these regulations will have a significant economic impact on a substantial number of small entities.

Based on the foregoing, OPM is not preparing an analysis for the RFA because OPM has determined, and the Director certifies, that these regulations will not have a significant economic impact on a substantial number of small entities.

Unfunded Mandates

Section 202 of the Unfunded Mandates Reform Act of 1995 (UMRA) [14] requires that agencies assess anticipated costs and benefits and take certain other actions before issuing a final rule that includes any Federal mandate that may result in expenditures in any one year by a State, local, or tribal government, in the aggregate, or by the private sector, of $100 million in 1995 dollars, updated annually for inflation. In 2013, that threshold is approximately $150 million. UMRA does not address the total cost of a rule. Rather, it focuses on certain categories of costs, mainly those ''Federal mandate'' costs resulting from (1) imposing enforceable duties on State, local, or tribal governments, or on the private sector; or (2) increasing the stringency of conditions in, or decreasing the funding of, State, local, or tribal governments under entitlement programs.

These regulations do not place any Federal mandates on State, local, or tribal governments, or on the private sector. This final rule would establish the MSPP, a voluntary Federal program that provides health insurance issuers the opportunity to contract with OPM to offer MSPs on the Exchanges. Section 3 of UMRA excludes from the definition of ''Federal mandate'' duties that arise from participation in a voluntary Federal program. Accordingly, no analysis under UMRA is required.

Federalism

Executive Order 13132 outlines fundamental principles of federalism, and requires the adherence to specific criteria by Federal agencies in the process of their formulation and implementation of policies that have ''substantial direct effects'' on the States, the relationship between the national government and States, or on the distribution of power and responsibilities among the various levels of government. Federal agencies promulgating regulations that have these federalism implications must consult with State and local officials, and describe the extent of their consultation and the nature of the concerns of State and local officials in the preamble to the regulation.

These regulations have federalism implications, because they have direct effects on the States, the relationship between the national government and States, or on the distribution of power

[12] 5 U.S.C. 601 *et seq.*

[13] According to the SBA size standards, entities with average annual receipts of $7 million or less would be considered small entities for North American Industry Classification System (NAICS) Code 524114 (Direct Health and Medical Insurance Carriers) (for more information, see ''Table of Size Standards Matched To North American Industry Classification System Codes,'' effective March 26, 2012, U.S. Small Business Administration, available at *http://www.sba.gov*).

[14] Public Law 104–4.

and responsibilities among various levels of government. In particular, under § 800.114, OPM may deem a State law to be inconsistent with section 1334 of the Affordable Care Act, and, thus, inapplicable to an MSP or MSPP issuer. However, in OPM's view, the federalism implications of these regulations are substantially mitigated because OPM expects that the vast majority of States have laws that are consistent with section 1334 of the Affordable Care Act. Furthermore, § 800.116 sets forth a process for dispute resolution if a State seeks to challenge OPM's determination that a State law is inapplicable to an MSP or MSPP issuer.

We received one comment that OPM is not in compliance with Executive Order 13132, because we do not defer to more consumer-protective State standards. However, we respectfully disagree because, as noted throughout this rule, OPM defers to more consumer-protective State standards. Moreover, in compliance with the requirement of Executive Order 13132 that agencies examine closely any policies that may have federalism implications or limit the policy-making discretion of the States, OPM has engaged in efforts to consult with and work cooperatively with affected State and local officials, including attending meetings of the NAIC and consulting with State insurance officials on an individual basis. OPM expects to act in a similar fashion in enforcing the Affordable Care Act requirements. Throughout the process of developing these final regulations, OPM has attempted to balance the States' interests in regulating health insurance issuers, and the statutory requirement to provide two MSPs in all Exchanges in the 50 States and the District of Columbia. By doing so, it is OPM's view that it has complied with the requirements of Executive Order 13132.

Pursuant to the requirements set forth in section 8(a) of Executive Order 13132, and by the signature affixed to these regulations, OPM certifies that it has complied with the requirements of Executive Order 13132 for the attached regulations in a meaningful and timely manner.

Congressional Review Act

This final rule is subject to the Congressional Review Act provisions of the Small Business Regulatory Enforcement Fairness Act of 1996 (5 U.S.C. 801, *et seq.*), which specifies that before a rule can take effect, the Federal agency promulgating the rule must submit to each House of Congress and to the Comptroller General a report containing a copy of the rule along with other specified information. In accordance with this requirement, OPM has transmitted this rule to Congress and the Comptroller General for review.

List of Subjects in 5 CFR Part 800

Administrative practice and procedure, Health facilities, Health insurance, Health professions, Reporting and recordkeeping requirements.

U.S. Office of Personnel Management.

John Berry,

Director.

Accordingly, the U.S. Office of Personnel Management is adding part 800 to title 45, chapter VIII, Code of Federal Regulations, as follows:

PART 800—MULTI-STATE PLAN PROGRAM

Subpart A—General Provisions and Definitions

Sec.
800.10 Basis and scope.
800.20 Definitions.

Subpart B—Multi-State Plan Program Issuer Requirements

800.101 General requirements.
800.102 Compliance with Federal law.
800.103 Authority to contract with issuers.
800.104 Phased expansion.
800.105 Benefits.
800.106 Cost-sharing limits, advance payments of premium tax credits, and cost-sharing reductions.
800.107 Levels of coverage.
800.108 Assessments and user fees.
800.109 Network adequacy.
800.110 Service area.
800.111 Accreditation requirement.
800.112 Reporting requirements.
800.113 Benefit plan material or information.
800.114 Compliance with applicable State law.
800.115 Level playing field.
800.116 Process for dispute resolution.

Subpart C—Premiums Rating Factors, Medical Loss Ratios, and Risk Adjustment

800.201 General requirements.
800.202 Rating factors.
800.203 Medical loss ratio.
800.204 Reinsurance, risk corridors, and risk adjustment.

Subpart D—Application and Contracting Procedures

800.301 Application process.
800.302 Review of applications.
800.303 MSPP contracting.
800.304 Term of the contract.
800.305 Contract renewal process.
800.306 Nonrenewal.

Subpart E—Compliance

800.401 Contract performance.
800.402 Contract quality assurance.
800.403 Fraud and abuse.
800.404 Compliance actions.
800.405 Reconsideration of compliance actions.

Subpart F—Appeals by Enrollees of Denials of Claims for Payment or Service

800.501 General requirements.
800.502 MSPP issuer internal claims and appeals.
800.503 External review.
800.504 Judicial review.

Subpart G—Miscellaneous

800.601 Reservation of authority.
800.602 Consumer choice with respect to certain services.

Authority: Sec. 1334 of Pub. L. 111–148, 124 Stat. 119; Pub. L. 111–152, 124 Stat. 1029.

Subpart A—General Provisions and Definitions

§ 800.10 Basis and scope.

(a) *Basis.* This part is based on the following sections of title I of the Affordable Care Act:

1001. Amendments to the Public Health Service Act.

1302. Essential Health Benefits Requirements.

1311. Affordable Choices of Health Benefit Plans.

1324. Level Playing Field.

1334. Multi-State Plans.

1341. Transitional Reinsurance Program for Individual Market in Each State.

1342. Establishment of Risk Corridors for Plans in Individual and Small Group Markets.

1343. Risk Adjustment.

(b) *Scope.* This part establishes standards for health insurance issuers to contract with the United States Office of Personnel Management (OPM) to offer multi-State plans to provide health insurance coverage on Exchanges for each State. It also establishes standards for appeal of a decision by OPM affecting the issuer's participation in the Multi-State Plan Program (MSPP) and standards for an enrollee in a multi-State plan (MSP) to appeal denials of payment or services by an MSPP issuer.

§ 800.20 Definitions.

For purposes of this part:

Actuarial value (AV) has the meaning given that term in 45 CFR 156.20.

Affordable Care Act means the Patient Protection and Affordable Care Act (Pub. L. 111–148), as amended by the Health Care and Education Reconciliation Act of 2010 (Pub. L. 111–152).

Applicant means an issuer or group of issuers that has submitted an application to OPM to be considered for participation in the Multi-State Plan Program.

Benefit plan material or information means explanations or descriptions, whether printed or electronic, that

describe a health insurance issuer's products. The term does not include a policy or contract for health insurance coverage.

Cost sharing has the meaning given that term in 45 CFR 155.20.

Director means the Director of the United States Office of Personnel Management.

EHB-benchmark plan has the meaning given that term in 45 CFR 156.20.

Exchange means a governmental agency or non-profit entity that meets the applicable requirements of 45 CFR part 155 and makes qualified health plans (QHPs) and MSPs available to qualified individuals and qualified employers. Unless otherwise identified, this term refers to State Exchanges, regional Exchanges, subsidiary Exchanges, and a Federally-facilitated Exchange.

Federal Employees Health Benefits Program or *FEHBP* means the health benefits program administered by the United States Office of Personnel Management pursuant to chapter 89 of title 5, United States Code.

Group of issuers means:

(1) A group of health insurance issuers who are affiliated either by common ownership and control or by common use of a nationally licensed service mark (as defined in this paragraph); or

(2) An affiliation of health insurance issuers and an entity that is not an issuer but that owns a nationally licensed service mark (as defined in this paragraph).

Health insurance coverage means benefits consisting of medical care (provided directly, through insurance or reimbursement, or otherwise) under any hospital or medical service policy or certificate, hospital or medical service plan contract, or HMO contract offered by a health insurance issuer. Health insurance coverage includes group health insurance coverage, individual health insurance coverage, and short-term, limited duration insurance.

Health insurance issuer or *issuer* means an insurance company, insurance service, or insurance organization (including an HMO) that is required to be licensed to engage in the business of insurance in a State and that is subject to State law that regulates insurance (within the meaning of section 514(b)(2) of the Employee Retirement Income Security Act (ERISA)). This term does not include a group health plan as defined in 45 CFR 146.145(a).

HHS means the United States Department of Health and Human Services.

Level of coverage means one of four standardized actuarial values of plan coverage as defined by section 1302(d)(1) of the Affordable Care Act.

Licensure means the authorization obtained from the appropriate State official or regulatory authority to offer health insurance coverage in the State.

Multi-State Plan or *MSP* means a health plan that is offered under a contract between OPM and the MSPP issuer pursuant to section 1334 of the Affordable Care Act and that meets the requirements of this part.

Multi-State Plan Program or *MSPP* means the program administered by OPM pursuant to section 1334 of the Affordable Care Act.

Multi-State Plan Program issuer or *MSPP issuer* means a health insurance issuer or group of issuers (as defined in this section) that has a contract with OPM to offer health plans pursuant to section 1334 of the Affordable Care Act and meets the requirements of this part.

Nationally licensed service mark means a word, name, symbol, or device, or any combination thereof, that an issuer or group of issuers uses consistently nationwide to identify itself.

Non-profit entity means:

(1) An organization that is incorporated under State law as a non-profit entity and licensed under State law as a health insurance issuer; or

(2) A group of health insurance issuers licensed under State law, a substantial portion of which are incorporated under State law as non-profit entities.

OPM means the United States Office of Personnel Management.

Percentage of total allowed cost of benefits has the meaning given that term in 45 CFR 156.20.

Plan year means a consecutive 12-month period during which a health plan provides coverage for health benefits. A plan year may be a calendar year or otherwise.

Prompt payment means a requirement imposed on a health insurance issuer to pay a provider or enrollee for a claimed benefit or service within a defined time period, including the penalty or consequence imposed on the issuer for failure to meet the requirement.

Qualified Health Plan or *QHP* means a health plan that has in effect a certification that it meets the standards described in subpart C of 45 CFR part 156 issued or recognized by each Exchange through which such plan is offered pursuant to the process described in subpart K of 45 CFR part 155.

Rating means the process, including rating factors, numbers, formulas, methodologies, and actuarial assumptions, used to set premiums for a health plan.

Secretary means the Secretary of the Department of Health and Human Services.

SHOP means a Small Business Health Options Program operated by an Exchange through which a qualified employer can provide its employees and their dependents with access to one or more qualified health plans (QHPs).

Silver plan variation has the meaning given that term in 45 CFR 156.400.

Small employer means, in connection with a group health plan with respect to a calendar year and a plan year, an employer who employed an average of at least one but not more than 100 employees on business days during the preceding calendar year and who employs at least one employee on the first day of the plan year. In the case of plan years beginning before January 1, 2016, a State may elect to define *small employer* by substituting ''50 employees'' for ''100 employees.''

Standard plan has the meaning given that term in 45 CFR 156.400.

State means each of the 50 States or the District of Columbia.

State Insurance Commissioner means the commissioner or other chief insurance regulatory official of a State.

Subpart B—Multi-State Plan Program Issuer Requirements

§ 800.101 General requirements.

An MSPP issuer must:

(a) *Licensed.* Be licensed as a health insurance issuer in each State where it offers health insurance coverage;

(b) *Contract with OPM.* Have a contract with OPM pursuant to this part;

(c) *Required levels of coverage.* Offer levels of coverage as required by § 800.107;

(d) *Eligibility and enrollment.* MSPs and MSPP issuers must meet the same requirements for eligibility, enrollment, and termination of coverage as those that apply to QHPs and QHP issuers pursuant to 45 CFR part 155, subparts D, E, and H, and 45 CFR 156.250, 156.260, 156.265, 156.270, and 156.285;

(e) *Applicable to each MSP.* Ensure that each of its MSPs meets the requirements of this part;

(f) *Compliance.* Comply with all standards set forth in this part;

(g) *OPM direction and other legal requirements.* Timely comply with OPM instructions and directions and with other applicable law; and

(h) *Other requirements.* Meet such other requirements as determined appropriate by OPM, in consultation with HHS, pursuant to section 1334(b)(4) of the Affordable Care Act.

(i) *Non-discrimination.* MSPs and MSPP issuers must comply with applicable Federal and State non-discrimination laws, including the standards set forth in 45 CFR 156.125 and 156.200(e).

§ 800.102 Compliance with Federal law.

(a) *Public Health Service Act.* As a condition of participation in the MSPP, an MSPP issuer must comply with applicable provisions of part A of title XXVII of the PHS Act. Compliance shall be determined by the Director.

(b) *Affordable Care Act.* As a condition of participation in the MSPP, an MSPP issuer must comply with applicable provisions of title I of the Affordable Care Act. Compliance shall be determined by the Director.

§ 800.103 Authority to contract with issuers.

(a) *General.* OPM may enter into contracts with health insurance issuers to offer at least two MSPs on Exchanges and SHOPs in each State, without regard to any statutes that would otherwise require competitive bidding.

(b) *Non-profit entity.* In entering into contracts with health insurance issuers to offer MSPs, OPM will enter into a contract with at least one non-profit entity as defined in § 800.20 of this part.

(c) *Group of issuers.* Any contract to offer an MSP may be with a group of issuers as defined in § 800.20.

(d) *Individual and group coverage.* The contracts will provide for individual health insurance coverage and for group health insurance coverage for small employers.

§ 800.104 Phased expansion.

(a) *Phase-in.* OPM may enter into a contract with a health insurance issuer to offer an MSP if the health insurance issuer agrees that:

(1) With respect to the first year for which the health insurance issuer offers an MSP, the health insurance issuer will offer the MSP in at least 60 percent of the States;

(2) With respect to the second such year, the health insurance issuer will offer the MSP in at least 70 percent of the States;

(3) With respect to the third such year, the health insurance issuer will offer the MSP in at least 85 percent of the States; and

(4) With respect to each subsequent year, the health insurance issuer will offer the MSP in all States.

(b) *Partial coverage within a State.* OPM may enter into a contract with an MSPP issuer even if the MSPP issuer's MSPs for a State cover fewer than all the service areas specified for that State pursuant to § 800.110. For each State in which the MSPP issuer offers partial coverage, the MSPP issuer must submit a plan for offering coverage throughout the State. OPM will monitor the MSPP issuer's progress in implementing the plan as part of its contract compliance activities under subpart E of this part.

(c) *Participation in SHOPs.* (1) An MSPP issuer's participation in the Federally-facilitated SHOP must be consistent with the requirements for QHP issuers specified in 45 CFR 156.200(g).

(2) An MSPP issuer must comply with State standards governing participation in State-based SHOPs, consistent with § 800.114. For these State-based SHOP standards, OPM retains discretion to allow an MSPP issuer to phase-in SHOP participation in States pursuant to section 1334(e) of the Affordable Care Act.

(d) *Licensed where offered.* OPM may enter into a contract with an MSPP issuer who is not licensed in every State, provided that the issuer is licensed in every State where it offers MSP coverage through any Exchanges in that State and demonstrates to OPM that it is making a good faith effort to become licensed in every State consistent with the timeframe in paragraph (a) of this section.

§ 800.105 Benefits.

(a) *Benefits package.* (1) An MSPP issuer must offer a uniform benefits package, including the essential health benefits (EHB) described in section 1302 of the Affordable Care Act, for each MSP within a State.

(2) The benefits package referred to in paragraph (a)(1) of this section must comply with section 1302 of the Affordable Care Act, as well as any applicable standards set by OPM or HHS.

(b) *Benefits package options.* (1) An MSPP issuer must offer a benefits package, in all States, that is substantially equal to:

(i) The EHB-benchmark plan in each State in which it operates; or

(ii) Any EHB-benchmark plan selected by OPM under paragraph (c) of this section.

(2) An issuer applying to participate in the MSPP must select one of the two benefits package options described in paragraph (b)(1) of this section in its application.

(3) An issuer must comply with any State standards relating to substitution of benchmark benefits or standard benefit designs.

(c) *OPM selection of benchmark plans.* (1) The OPM-selected EHB-benchmark plans are the three largest Federal Employees Health Benefits Program (FEHBP) plan options, as identified by HHS pursuant to section 1302(b) of the Affordable Care Act, and as supplemented pursuant to paragraphs (c)(2) through (c)(4) of this section.

(2) Any EHB-benchmark plan selected by OPM under paragraph (c)(1) of this section lacking coverage of pediatric oral services or pediatric vision services must be supplemented by the addition of the entire category of benefits from the largest Federal Employee Dental and Vision Insurance Program (FEDVIP) dental or vision plan options, respectively, pursuant to 45 CFR 156.110(b) and section 1302(b) of the Affordable Care Act.

(3) An MSPP issuer must follow State definitions where the State chooses to specifically define the habilitative services and devices category pursuant to 45 CFR 156.110(f). In the case of any State that chooses not to define this category, if any OPM-selected EHB-benchmark plan lacks coverage of habilitative services and devices, OPM may determine what habilitative service and devices are to be included in that EHB-benchmark plan.

(4) Any EHB-benchmark plan selected by OPM under paragraph (c)(1) of this section must include, for each State, any State-required benefits enacted before December 31, 2011, that are included in the State's EHB-benchmark plan as described in paragraph (b)(1)(i) of this section, or specific to the market in which the plan is offered.

(d) *OPM approval.* An MSPP issuer's benefits package, including its prescription drug list, must be submitted for approval by OPM, which will review a benefits package proposed by an MSPP issuer and determine if it is substantially equal to an EHB-benchmark plan described in paragraph (b)(1) of this section, pursuant to standards set forth by OPM or HHS, including 45 CFR 156.115, 156.122, and 156.125.

(e) *State payments for additional State-required benefits.* If a State requires that benefits in addition to the benchmark package be offered to MSP enrollees in that State, then pursuant to section 1334(c)(2) of the Affordable Care Act, the State must assume the cost of such additional benefits by making payments either to the enrollee or on behalf of the enrollee to the MSPP issuer.

§ 800.106 Cost-sharing limits, advance payments of premium tax credits, and cost-sharing reductions.

(a) *Cost-sharing limits.* For each MSP it offers, an MSPP issuer must ensure that the cost-sharing provisions of the

MSP comply with section 1302(c) of the Affordable Care Act, as well as any applicable standards set by OPM or HHS.

(b) *Advance payments of premium tax credits and cost-sharing reductions.* For each MSP it offers, an MSPP issuer must ensure that an eligible individual receives the benefit of advance payments of premium tax credits under section 36B of the Internal Revenue Code and the cost-sharing reductions under section 1402 of the Affordable Care Act. An MSPP issuer must also comply with any applicable standards set by OPM or HHS.

§ 800.107 Levels of coverage.

(a) *Silver and gold levels of coverage required.* An MSPP issuer must offer at least one MSP at the silver level of coverage and at least one MSP at the gold level of coverage on each Exchange in which the issuer is certified to offer an MSP pursuant to a contract with OPM.

(b) *Bronze or platinum metal levels of coverage permitted.* Pursuant to a contract with OPM, an MSPP issuer may offer one or more MSPs at the bronze level of coverage or the platinum level of coverage, or both, on any Exchange or SHOP in any State.

(c) *Child-only plans.* For each level of coverage, the MSPP issuer must offer a child-only plan at the same level of coverage as any health insurance coverage offered to individuals who, as of the beginning of the plan year, have not attained the age of 21.

(d) *Plan variations for the reduction or elimination of cost-sharing.* An MSPP issuer must comply with section 1402 of the Affordable Care Act, as well as any applicable standards set by OPM or HHS.

(e) *OPM approval.* An MSPP issuer must submit the levels of coverage plans and plan variations to OPM for review and approval by OPM.

§ 800.108 Assessments and user fees.

(a) *Discretion to charge assessment and user fees.* Beginning in 2015, OPM may require an MSPP issuer to pay an assessment or user fee as a condition of participating in the MSPP.

(b) *Determination of amount.* The amount of the assessment or user fee charged by OPM for a plan year is the amount determined necessary by OPM to meet the costs of OPM's functions under the Affordable Care Act for a plan year, including but not limited to such functions as entering into contracts with, certifying, recertifying, decertifying, and overseeing MSPs and MSPP issuers for that plan year. The amount of the assessment or user fee charged by OPM will be offset against the assessment or user fee amount required by any State-based Exchange or Federally-facilitated Exchange such that the total of all assessments and user fees paid by the MSPP issuer for the year for the MSP shall be no greater than nor less than the amount of the assessment or user fee paid by QHP issuers in that State-based Exchange or Federally-facilitated Exchange for that year.

(c) *Process for collecting MSPP assessment or user fees.* OPM may require an MSPP issuer to make payment of the MSPP assessment or user fee amount directly to OPM, and the MSPP issuer will deduct the MSPP assessment or user fee required under paragraph (a) of this section from the amount for any State-based Exchange or Federally-facilitated Exchange and the MSPP issuer would forward the remainder of the payment to the State or to HHS, as appropriate.

§ 800.109 Network adequacy.

(a) *General requirement.* An MSPP issuer must ensure that the provider network of each of its MSPs, as available to all enrollees, meets the following standards:

(1) Maintains a network that is sufficient in number and types of providers to assure that all services will be accessible without unreasonable delay;

(2) Is consistent with the network adequacy provisions of section 2702(c) of the Public Health Service Act; and

(3) Includes essential community providers in compliance with 45 CFR 156.235.

(b) *Provider directory.* An MSPP issuer must make its provider directory for an MSP available to the Exchange for publication online pursuant to guidance from the Exchange and to potential enrollees in hard copy, upon request. In the provider directory, an MSPP issuer must identify providers that are not accepting new patients.

(c) *OPM guidance.* OPM will issue guidance containing the criteria and standards that it will use to determine the adequacy of a provider network.

§ 800.110 Service area.

An MSPP issuer must offer an MSP within one or more service areas in a State defined by each Exchange pursuant to 45 CFR 155.1055. If an Exchange permits issuers to define their service areas, an MSPP issuer must obtain OPM's approval for its proposed service areas. Pursuant to § 800.104, OPM may enter into a contract with an MSPP issuer even if the MSPP issuer's MSPs for a State cover fewer than all the service areas specified for that State. MSPs will follow the same standards for service areas for QHPs pursuant to 45 CFR 155.1055. As part of its contract compliance activities under subpart E of this part, OPM will consult with State regulators and the State Exchange to monitor the MSPP issuer's progress expanding coverage statewide and will ensure that MSPs meet QHP requirements in 45 CFR 155.1055(b).

§ 800.111 Accreditation requirement.

(a) *General requirement.* An MSPP issuer must be or become accredited consistent with the requirements for QHP issuers specified in section 1311 of the Affordable Care Act and 45 CFR 156.275(a).

(b) *Release of survey.* An MSPP issuer must authorize the accrediting entity that accredits the MSPP issuer to release to OPM and to the Exchange a copy of its most recent accreditation survey, together with any survey-related information that OPM or an Exchange may require, such as corrective action plans and summaries of findings.

(c) *Timeframe for accreditation.* An MSPP issuer that is not accredited as of the date that it enters into a contract with OPM must become accredited within the timeframe established by OPM as authorized by 45 CFR 155.1045.

§ 800.112 Reporting requirements.

(a) *OPM specification of reporting requirements.* OPM will specify the data and information that must be reported by an MSPP issuer, including data permitted or required by the Affordable Care Act and such other data as OPM may determine necessary for the oversight and administration of the MSPP. OPM will also specify the form, manner, processes, and frequency for the reporting of data and information. The Director may require that MSPP issuers submit claims payment and enrollment data to facilitate OPM's oversight and administration of the MSPP in a manner similar to the FEHBP.

(b) *Quality and quality improvement standards.* An MSPP issuer must comply with any standards required by OPM for reporting quality and quality improvement activities, including but not limited to implementation of a quality improvement strategy, disclosure of quality measures to enrollees and prospective enrollees, reporting of pediatric quality measures, and implementation of rating and enrollee satisfaction surveys, which will be similar to standards under section 1311(c)(1)(E), (H), and (I), (c)(3), and (c)(4) of the Affordable Care Act.

§ 800.113 Benefit plan material or information.

(a) *Compliance with Federal and State law.* An MSPP issuer must comply with Federal and State laws relating to benefit plan material or information, including the provisions of this section and guidance issued by OPM specifying its standards, process, and timeline for approval of benefit plan material or information.

(b) *General standards for MSP applications and notices.* An MSPP issuer must provide all applications and notices to enrollees in accordance with the standards described in 45 CFR 155.205(c). OPM may establish additional standards to meet the needs of MSP enrollees.

(c) *Accuracy.* An MSPP issuer is responsible for the accuracy of its benefit plan material or information.

(d) *Truthful, not misleading, no material omissions, and plain language.* All benefit plan material or information must be:

(1) Truthful, not misleading, and without material omissions; and

(2) Written in plain language, as defined in section 1311(e)(3)(B) of the Affordable Care Act.

(e) *Uniform explanation of coverage documents and standardized definitions.* An MSPP issuer must comply with the provisions of section 2715 of the PHS Act and regulations issued to implement that section.

(f) *OPM review and approval of benefit plan material or information.* OPM may request an MSPP issuer to submit to OPM benefit plan material or information, as defined in § 800.20. OPM reserves the right to review and approve benefit plan material or information to ensure that an MSPP issuer complies with Federal and State laws, and the standards prescribed by OPM with respect to benefit plan material or information.

(g) *Statement on certification by OPM.* An MSPP issuer may include a statement in its benefit plan material or information that:

(1) OPM has certified the MSP as eligible to be offered on the Exchange; and

(2) OPM monitors the MSP for compliance with all applicable law.

§ 800.114 Compliance with applicable State law.

(a) *Compliance with State law.* An MSPP issuer must, with respect to each of its MSPs, generally comply with State law pursuant to section 1334(b)(2) of the Affordable Care Act. However, the MSPs and MSPP issuers are not subject to State laws that:

(1) Are inconsistent with section 1334 of the Affordable Care Act or this part;

(2) Prevent the application of a requirement of part A of title XXVII of the PHS Act; or

(3) Prevent the application of a requirement of title I of the Affordable Care Act.

(b) *Determination of inconsistency.* After consultation with the State and HHS, OPM reserves the right to determine, in its judgment, as effectuated through an MSPP contract, these regulations, or OPM guidance, whether the standards set forth in paragraph (a) of this section are satisfied with respect to particular State laws.

§ 800.115 Level playing field.

An MSPP issuer must, with respect to each of its MSPs, meet the following requirements in order to ensure a level playing field:

(a) *Guaranteed renewal.* Guarantee that an enrollee can renew enrollment in an MSP in compliance with sections 2703 and 2742 of the PHS Act;

(b) *Rating.* In proposing premiums for OPM approval, use only the rating factors permitted under section 2701 of the PHS Act and State law;

(c) *Preexisting conditions.* Not impose any preexisting condition exclusion and comply with section 2704 of the PHS Act;

(d) *Non-discrimination.* Comply with section 2705 of the PHS Act;

(e) *Quality improvement and reporting.* Comply with all Federal and State quality improvement and reporting requirements. *Quality improvement and reporting* means quality improvement as defined in section 1311(h) of the Affordable Care Act and quality improvement plans or strategies required under State law, and quality reporting as defined in section 2717 of the PHS Act and section 1311(g) of the Affordable Care Act. Quality improvement also includes activities such as, but not limited to, implementation of a quality improvement strategy, disclosure of quality measures to enrollees and prospective enrollees, and reporting of pediatric quality measures, which will be similar to standards under section 1311(c)(1)(E), (H), and (I) of the Affordable Care Act;

(f) *Fraud and abuse.* Comply with all Federal and State fraud and abuse laws;

(g) *Licensure.* Be licensed in every State in which it offers an MSP;

(h) *Solvency and financial requirements.* Comply with the solvency standards set by each State in which it offers an MSP;

(i) *Market conduct.* Comply with the market conduct standards of each State in which it offers an MSP;

(j) *Prompt payment.* Comply with applicable State law in negotiating the terms of payment in contracts with its providers and in making payments to claimants and providers;

(k) *Appeals and grievances.* Comply with Federal standards under section 2719 of the PHS Act for appeals and grievances relating to adverse benefit determinations, as described in subpart F of this part;

(l) *Privacy and confidentiality.* Comply with all Federal and State privacy and security laws and requirements, including any standards required by OPM in guidance or contract, which will be similar to the standards contained in 45 CFR part 162 and applicable State law; and

(m) *Benefit plan material or information.* Comply with Federal and State law, including § 800.113.

§ 800.116 Process for dispute resolution.

(a) *Determinations about applicability of State law under section 1334(b)(2) of the Affordable Care Act.* In the event of a dispute about the applicability to an MSP or MSPP issuer of a State law, the State may request that OPM reconsider a determination that an MSP or MSPP issuer is not subject to such State law.

(b) *Required demonstration.* A State making a request under paragraph (a) of this section must demonstrate that the State law at issue:

(1) Is not inconsistent with section 1334 of the Affordable Care Act or this part;

(2) Does not prevent the application of a requirement of part A of title XXVII of the PHS Act; and

(3) Does not prevent the application of a requirement of title I of the Affordable Care Act.

(c) *Request for review.* The request must be in writing and include contact information, including the name, telephone number, email address, and mailing address of the person or persons whom OPM may contact regarding the request for review. The request must be in such form, contain such information, and be submitted in such manner and within such timeframe as OPM may prescribe.

(1) The requester may submit to OPM any relevant information to support its request.

(2) OPM may obtain additional information relevant to the request from any source as it may, in its judgment, deem necessary. OPM will provide the requester with a copy of any additional information it obtains and provide an opportunity for the requester to respond (including by submission of additional information or explanation).

(3) OPM will issue a written decision within 60 calendar days after receiving the written request, or after the due date

for a response under paragraph (c)(2) of this section, whichever is later, unless a different timeframe is agreed upon.

(4) OPM's written decision will constitute final agency action that is subject to review under the Administrative Procedure Act in the appropriate U.S. district court. Such review is limited to the record that was before OPM when OPM made its decision.

Subpart C—Premiums, Rating Factors, Medical Loss Ratios, and Risk Adjustment

§ 800.201 General requirements.

(a) *Premium negotiation.* OPM will negotiate annually with an MSPP issuer, on a State by State basis, the premiums for each MSP offered by that issuer in that State. Such negotiations may include negotiations about the cost-sharing provisions of an MSP.

(b) *Duration.* Premiums will remain in effect for the plan year.

(c) *Guidance on rate development.* OPM will issue guidance addressing methods for the development of premiums for the MSPP. That guidance will follow State rating standards generally applicable in a State, to the greatest extent practicable.

(d) *Calculation of actuarial value.* An MSPP issuer must calculate actuarial value in the same manner as QHP issuers under section 1302(d) of the Affordable Care Act, as well as any applicable standards set by OPM or HHS.

(e) *OPM rate review process.* An MSPP issuer must participate in the rate review process established by OPM to negotiate rates for MSPs. The rate review process established by OPM will be similar to the process established by HHS pursuant to section 2794 of the PHS Act and disclosure and review standards established under 45 CFR part 154.

(f) *State Effective Rate Review.* With respect to its MSPs, an MSPP issuer is subject to a State's rate review process, including a State's Effective Rate Review Program established by HHS pursuant to section 2794 of the PHS Act and 45 CFR part 154. In the event HHS is reviewing rates for a State pursuant to section 2794 of the PHS Act, HHS will defer to OPM's judgment regarding the MSPs' proposed rate increase. If a State withholds approval of an MSP and OPM determines, in its discretion, that the State's action would prevent OPM from operating the MSPP, OPM retains authority to make the final decision to approve rates for participation in the MSPP, notwithstanding the absence of State approval.

(g) *Single risk pool.* An MSPP issuer must consider all enrollees in an MSP to be in the same risk pool as all enrollees in all other health plans in the individual market or the small group market, respectively, in compliance with section 1312(c) of the Affordable Care Act, 45 CFR 156.80, and any applicable Federal or State laws and regulations implementing that section.

§ 800.202 Rating factors.

(a) *Permissible rating factors.* In proposing premiums for each MSP, an MSPP issuer must use only the rating factors permitted under section 2701 of the PHS Act.

(b) *Application of variations based on age or tobacco use.* Rating variations permitted under section 2701 of the PHS Act must be applied by an MSPP issuer based on the portion of the premium attributable to each family member covered under the coverage in accordance with any applicable Federal or State laws and regulations implementing section 2701(a) of the PHS Act.

(c) *Age rating.* For age rating, an MSPP issuer must use the ratio established by the State in which the MSP is offered, if it is less than 3:1.

(1) *Age bands.* An MSPP issuer must use the uniform age bands established under HHS regulations implementing section 2701(a) of the PHS Act.

(2) *Age curves.* An MSPP issuer must use the age curves established under HHS regulations implementing section 2701(a) of the PHS Act, or age curves established by a State pursuant to HHS regulations.

(d) *Rating areas.* An MSP must use the rating areas appropriate to the State in which the MSP is offered and established under HHS regulations implementing section 2701(a) if the PHS Act.

(e) *Tobacco rating.* An MSPP issuer must apply tobacco use as a rating factor in accordance with any applicable Federal or State laws and regulations implementing section 2701(a) of the PHS Act.

(f) *Wellness programs.* An MSPP issuer must comply with any applicable Federal or State laws and regulations implementing section 2702 of the PHS Act.

§ 800.203 Medical loss ratio.

(a) *Required medical loss ratio.* An MSPP issuer must attain:

(1) The medical loss ratio (MLR) required under section 2718 of the PHS Act and regulations promulgated by HHS; and

(2) Any MSP-specific MLR that OPM may set in the best interests of MSP enrollees or that is necessary to be consistent with a State's requirements with respect to MLR.

(b) *Consequences of not attaining required medical loss ratio.* If an MSPP issuer fails to attain an MLR set forth in paragraph (a) of this section, OPM may take any appropriate action, including but not limited to intermediate sanctions, such as suspension of marketing, decertifying an MSP in one or more States, or terminating an MSPP issuer's contract pursuant to § 800.404.

§ 800.204 Reinsurance, risk corridors, and risk adjustment.

(a) *Transitional reinsurance program.* An MSPP issuer must comply with section 1341 of the Affordable Care Act, 45 CFR part 153, and any applicable Federal or State regulations under section 1341 that set forth requirements to implement the transitional reinsurance program for the individual market.

(b) *Temporary risk corridors program.* An MSPP issuer must comply with section 1342 of the Affordable Care Act, 45 CFR part 153, and any applicable Federal regulations under section 1342 that set forth requirements to implement the risk corridor program.

(c) *Risk adjustment program.* An MSPP issuer must comply with section 1343 of the Affordable Care Act, 45 CFR part 153, and any applicable Federal or State regulations under section 1343 that set forth requirements to implement the risk adjustment program.

Subpart D—Application and Contracting Procedures

§ 800.301 Application process.

(a) *Acceptance of applications.* Without regard to section 6101(b)–(d) of title 41, United States Code, or any other statute requiring competitive bidding, OPM may consider annually applications from health insurance issuers, including groups of health insurance issuers as defined in § 800.20, to participate in the MSPP. If OPM determines that it is not beneficial for the MSPP to consider new applications for an upcoming year, OPM will issue a notice to that effect.

(b) *Form and manner of applications.* An applicant must submit to OPM, in the form and manner and in accordance with the timeline specified by OPM, the information requested by OPM for determining whether an applicant meets the requirements of this part.

§ 800.302 Review of applications.

(a) *Determinations.* OPM will determine if an applicant meets the requirements of this part. If OPM determines that an applicant meets the

requirements of this part, OPM may accept the applicant to enter into contract negotiations with OPM to participate in the MSPP.

(b) *Requests for additional information.* OPM may request additional information from an applicant before making a decision about whether to enter into contract negotiations with that applicant to participate in the MSPP.

(c) *Declination of application.* If, after reviewing an application to participate in the MSPP, OPM declines to enter into contract negotiations with the applicant, OPM will inform the applicant in writing of the reasons for that decision.

(d) *Discretion.* The decision whether to enter into contract negotiations with a health insurance issuer who has applied to participate in the MSPP is committed to OPM's discretion.

(e) *Impact on future applications.* OPM's declination of an application to participate in the MSPP will not preclude the applicant from submitting an application for a subsequent year to participate in the MSPP.

§ 800.303 MSPP contracting.

(a) *Participation in MSPP.* To become an MSPP issuer, the applicant and the Director or the Director's designee must sign a contract that meets the requirements of this part.

(b) *Standard contract.* OPM will establish a standard contract for the MSPP.

(c) *Premiums.* OPM and the applicant will negotiate the premiums for an MSPP for each plan year in accordance with the provisions of subpart C of this part.

(d) *Benefit packages.* OPM must approve the applicant's benefit packages for an MSP.

(e) *Additional terms and conditions.* OPM may elect to negotiate with an applicant such additional terms, conditions, and requirements that:

(1) Are in the interests of MSP enrollees; or

(2) OPM determines to be appropriate.

(f) *Certification to offer health insurance coverage.*

(1) For each plan year, an MSPP contract will contain a certification that specifies the Exchanges in which the MSPP issuer is authorized to offer an MSP, as well as the specific benefit packages authorized to be offered on each Exchange and the premiums to be charged for each benefit package on each Exchange.

(2) An MSPP issuer may not offer an MSP on an Exchange unless its MSPP contract with OPM includes a certification authorizing the MSPP issuer to offer the MSP on that Exchange in accordance with paragraph (f)(1) of this section.

§ 800.304 Term of the contract.

(a) *Term of a contract.* The term of the contract will be specified in the MSPP contract and must be for a period of at least the 12 consecutive months defined as the plan year.

(b) *Plan year.* The plan year is a consecutive 12-month period during which an MSP provides coverage for health benefits. A plan year may be a calendar year or otherwise.

§ 800.305 Contract renewal process.

(a) *Renewal.* To continue participating in the MSPP, an MSPP issuer must provide to OPM, in the form and manner and in accordance with the timeline prescribed by OPM, the information requested by OPM for determining whether the MSPP issuer continues to meet the requirements of this part.

(b) *OPM decision.* Subject to paragraph (c) of this section, OPM will renew the MSPP contract of an MSPP issuer who timely submits the information described in paragraph (a).

(c) *OPM discretion not to renew.* OPM may decline to renew the contract of an MSPP issuer if:

(1) OPM and the MSPP issuer fail to agree on premiums and benefits for an MSP for the subsequent plan year;

(2) The MSPP issuer has engaged in conduct described in § 800.404(a) of this part; or

(3) OPM determines that the MSPP issuer will be unable to comply with a material provision of section 1334 of the Affordable Care Act or this part.

(d) *Failure to agree on premiums and benefits.* Except as otherwise provided in this part, if an MSPP issuer has complied with paragraph (a) of this section and OPM and the MSPP issuer fail to agree on premiums and benefits for an MSP on one or more Exchanges for the subsequent plan year by the date required by OPM, either party may provide notice of nonrenewal pursuant to § 800.306, or OPM may in its discretion withdraw the certification of that MSP on the Exchange or Exchanges for that plan year. In addition, if OPM and the MSPP issuer fail to agree on benefits and premiums for an MSP on one or more Exchanges by the date set by OPM and in the event of no action (no notice of nonrenewal or renewal) by either party, the MSPP contract will be renewed and the existing premiums and benefits for that MSP on that Exchange or Exchanges will remain in effect for the subsequent plan year.

§ 800.306 Nonrenewal.

(a) *Definition of nonrenewal.* As used in this subpart and subpart E of this part, ''nonrenewal'' means a decision by either OPM or an MSPP issuer not to renew an MSPP contract.

(b) *Notice required.* Either OPM or an MSPP issuer may decline to renew an MSPP contract by providing a written notice of nonrenewal to the other party.

(c) *MSPP issuer responsibilities.* The MSPP issuer's written notice of nonrenewal must be made in accordance with its MSPP contract with OPM. The MSPP issuer also must comply with any requirements regarding the termination of a plan that are applicable to a QHP offered on an Exchange on which the MSP was offered, including a requirement to provide advance written notice of termination to enrollees. If an Exchange does not have requirements about advance written notice of termination to enrollees, the MSPP issuer must inform current MSP enrollees in writing of the nonrenewal of the MSP no later than 90 days prior to termination of coverage, unless OPM determines that good cause justifies less than 90 days' notice.

Subpart E—Compliance

§ 800.401 Contract performance.

(a) *General.* An MSPP issuer must perform an MSPP contract with OPM in accordance with the requirements of section 1334 of the Affordable Care Act and this part. The MSPP issuer must continue to meet such requirements while under an MSPP contract with OPM.

(b) *Specific requirements for issuers.* In addition to the requirements described in paragraph (a) of this section, the following requirements apply to each MSPP issuer:

(1) It must have, in the judgment of OPM, the financial resources to carry out its obligations under the MSPP;

(2) It must keep such reasonable financial and statistical records, and furnish to OPM such reasonable financial and statistical reports with respect to the MSP or the MSPP, as may be requested by OPM;

(3) It must permit representatives of OPM (including the OPM Office of Inspector General), the U.S. Government Accountability Office, and any other applicable Federal Government auditing entities to audit and examine its records and accounts that pertain, directly or indirectly, to the MSP at such reasonable times and places as may be designated by OPM or the U.S. Government Accountability Office;

(4) It must timely submit to OPM a properly completed and signed novation

or change-of-name agreement in accordance with subpart 42.12 of 48 CFR part 42;

(5) It must perform the MSPP contract in accordance with prudent business practices, as described in paragraph (c) of this section; and

(6) It must not perform the MSPP contract in accordance with poor business practices, as described in paragraph (d) of this section.

(c) *Prudent business practices.* For purposes of paragraph (b)(5) of this section, prudent business practices include, but are not limited to, the following:

(1) Timely compliance with OPM instructions and directives;

(2) Legal and ethical business and health care practices;

(3) Compliance with the terms of the MSPP contract, regulations, and statutes;

(4) Timely and accurate adjudication of claims or rendering of medical services;

(5) Operating a system for accounting for costs incurred under the MSPP contract, which includes segregating and pricing MSP medical utilization and allocating indirect and administrative costs in a reasonable and equitable manner;

(6) Maintaining accurate accounting reports of costs incurred in the administration of the MSPP contract;

(7) Applying performance standards for assuring contract quality as outlined at § 800.402; and

(8) Establishing and maintaining a system of internal controls that provides reasonable assurance that:

(i) The provision and payments of benefits and other expenses comply with legal, regulatory, and contractual guidelines;

(ii) MSP funds, property, and other assets are safeguarded against waste, loss, unauthorized use, or misappropriation; and

(iii) Data are accurately and fairly disclosed in all reports required by OPM.

(d) *Poor business practices.* For purposes of paragraph (b)(6) of this section, poor business practices include, but are not limited to, the following:

(1) Using fraudulent or unethical business or health care practices or otherwise displaying a lack of business integrity or honesty;

(2) Repeatedly or knowingly providing false or misleading information in the rate setting process;

(3) Failing to comply with OPM instructions and directives;

(4) Having an accounting system that is incapable of separately accounting for costs incurred under the contract and/or that lacks the internal controls necessary to fulfill the terms of the contract;

(5) Failing to assure that the MSP properly pays or denies claims, or, if applicable, provides medical services that are inconsistent with standards of good medical practice; and

(6) Entering into contracts or employment agreements with providers, provider groups, or health care workers that include provisions or financial incentives that directly or indirectly create an inducement to limit or restrict communication about medically necessary services to any individual covered under the MSPP. Financial incentives are defined as bonuses, withholds, commissions, profit sharing or other similar adjustments to basic compensation (e.g., service fee, capitation, salary) which have the effect of limiting or reducing communication about appropriate medically necessary services.

(e) *Performance escrow account.* OPM may require MSPP issuers to pay an assessment into an escrow account to ensure contract compliance and benefit MSP enrollees.

§ 800.402 Contract quality assurance.

(a) *General.* This section prescribes general policies and procedures to ensure that services acquired under MSPP contracts conform to the contract's quality requirements.

(b) *Internal controls.* OPM will periodically evaluate the contractor's system of internal controls under the quality assurance program required by the contract and will acknowledge in writing whether or not the system is consistent with the requirements set forth in the contract. OPM's reviews do not diminish the contractor's obligation to implement and maintain an effective and efficient system to apply the internal controls.

(c) *Performance standards.* (1) OPM will issue specific performance standards for MSPP contracts and will inform MSPP issuers of the applicable performance standards prior to negotiations for the contract year. OPM may benchmark its standards against standards generally accepted in the insurance industry. OPM may authorize nationally recognized standards to be used to fulfill this requirement.

(2) MSPP issuers must comply with the performance standards issued under this section.

§ 800.403 Fraud and abuse.

(a) *Program required.* An MSPP issuer must conduct a program to assess its vulnerability to fraud and abuse as well as to address such vulnerabilities.

(b) *Fraud detection system.* An MSPP issuer must operate a system designed to detect and eliminate fraud and abuse by employees and subcontractors of the MSPP issuer, by providers furnishing goods or services to MSP enrollees, and by MSP enrollees.

(c) *Submission of information.* An MSPP issuer must provide to OPM such information or assistance as may be necessary for the agency to carry out the duties and responsibilities, including those of the Office of Inspector General as specified in sections 4 and 6 of the Inspector General Act of 1978 (5 U.S.C. App.). An MSPP issuer must provide any requested information in the form, manner, and timeline prescribed by OPM.

§ 800.404 Compliance actions.

(a) *Causes for OPM compliance actions.* The following constitute cause for OPM to impose a compliance action described in paragraph (b) of this section against an MSPP issuer:

(1) Failure by the MSPP issuer to meet the requirements set forth in § 800.401(a) and (b);

(2) An MSPP issuer's sustained failure to perform the MSPP contract in accordance with prudent business practices, as described in § 800.401(c);

(3) A pattern of poor conduct or evidence of poor business practices such as those described in § 800.401(d); or

(4) Such other violations of law or regulation as OPM may determine.

(b) *Compliance actions.* (1) OPM may impose a compliance action against an MSPP issuer at any time during the contract term if it determines that the MSPP issuer is not in compliance with applicable law, this part, or the terms of its contract with OPM.

(2) Compliance actions may include, but are not limited to:

(i) Establishment and implementation of a corrective action plan;

(ii) Imposition of intermediate sanctions, such as suspensions of marketing;

(iii) Performance incentives;

(iv) Reduction of service area or areas;

(v) Withdrawal of the certification of the MSPP issuer to offer the MSP on one or more Exchanges;

(vi) Nonrenewal of the MSPP contract; and

(vii) Withdrawal of approval or termination of the MSPP contract.

(c) *Notice of compliance action.* (1) OPM must notify an MSPP issuer in writing of a compliance action under this section. Such notice must indicate the specific compliance action undertaken and the reason for the compliance action.

(2) For compliance actions listed in paragraphs (b)(2)(v) through (b)(2)(vii) of this section, such notice must include a statement that the MSPP issuer is entitled to request a reconsideration of OPM's determination to impose a compliance action pursuant to § 800.405.

(3) Upon imposition of a compliance action listed in paragraphs (b)(2)(iv) through (b)(2)(vii) of this section, OPM must notify the State Insurance Commissioner(s) and Exchange officials in the State or States in which the compliance action is effective.

(d) *Notice to enrollees.* If OPM terminates an MSPP issuer's MSPP contract with OPM, or OPM withdraws the MSPP issuer's certification to offer the MSP on an Exchange, the MSPP issuer must comply with any requirements regarding the termination of a plan that are applicable to a QHP offered on an Exchange on which the MSP was offered, including a requirement to provide advance written notice of termination to enrollees. If an Exchange does not have requirements about advance written notice of termination to enrollees, the MSPP issuer must inform current MSP enrollees in writing of the nonrenewal of the MSP no later than 90 days prior to termination of coverage, unless OPM determines that good cause justifies less than 90 days' notice.

(e) *Definition.* As used in this subpart, ''termination'' means a decision by OPM to cancel an MSPP contract prior to the end of its contract term. The term includes OPM's withdrawal of approval of an MSPP contract.

§ 800.405 Reconsideration of compliance actions.

(a) *Right to request reconsideration.* An MSPP issuer may request that OPM reconsider a determination to impose one of the following compliance actions:

(1) Withdrawal of the certification of the MSPP issuer to offer the MSP on one or more Exchanges;

(2) Nonrenewal of the MSPP contract; or

(3) Termination of the MSPP contract.

(b) *Request for reconsideration and/or hearing.* (1) An MSPP issuer with a right to request reconsideration specified in paragraph (a) of this section may request a hearing in which OPM will reconsider its determination to impose a compliance action.

(2) A request under this section must be in writing and contain contact information, including the name, telephone number, email address, and mailing address of the person or persons whom OPM may contact regarding a request for a hearing with respect to the reconsideration. The request must be in such form, contain such information, and be submitted in such manner as OPM may prescribe.

(3) The request must be received by OPM within 15 calendar days after the date of the MSPP issuer's receipt of the notice of compliance action. The MSPP issuer may request that OPM's reconsideration allow a representative of the MSPP issuer to appear personally before OPM.

(4) A request under this section must include a detailed statement of the reasons that the MSPP issuer disagrees with OPM's imposition of the compliance action, and may include any additional information that will assist OPM in rendering a final decision under this section.

(5) OPM may obtain additional information relevant to the request from any source as it may, in its judgment, deem necessary. OPM will provide the MSPP issuer with a copy of any additional information it obtains and provide an opportunity for the MSPP issuer to respond (including by submitting additional information or explanation).

(6) OPM's reconsideration and hearing, if requested, may be conducted by the Director or a representative designated by the Director who did not participate in the initial decision that is the subject of the request for review.

(c) *Notice of final decision.* OPM will notify the MSPP issuer, in writing, of OPM's final decision on the MSPP issuer's request for reconsideration and the specific reasons for that final decision. OPM's written decision will constitute final agency action that is subject to review under the Administrative Procedure Act in the appropriate U.S. district court. Such review is limited to the record that was before OPM when it made its decision.

Subpart F—Appeals by Enrollees of Denials of Claims for Payment or Service

§ 800.501 General requirements.

(a) *Definitions.* For purposes of this subpart:

(1) *Adverse benefit determination* has the meaning given that term in 45 CFR 147.136(a)(2)(i).

(2) *Claim* means a request for:

(i) Payment of a health-related bill; or

(ii) Provision of a health-related service or supply.

(b) *Applicability.* This subpart applies to enrollees and to other individuals or entities who are acting on behalf of an enrollee and who have the enrollee's specific written consent to pursue a remedy of an adverse benefit determination.

§ 800.502 MSPP issuer internal claims and appeals.

(a) *Processes.* MSPP issuers must comply with the internal claims and appeals processes applicable to group health plans and health insurance issuers under 45 CFR 147.136(b).

(b) *Timeframes and notice of determination.* An MSPP issuer must provide written notice to an enrollee of its determination on a claim brought under paragraph (a) of this section according to the timeframes and notification rules under 45 CFR 147.136(b) and (e), including the timeframes for urgent claims. If the MSPP issuer denies a claim (or a portion of the claim), the enrollee may appeal the adverse benefit determination to the MSPP issuer in accordance with 45 CFR 147.136(b).

§ 800.503 External review.

(a) *External review by OPM.* OPM will conduct external review of adverse benefit determinations using a process similar to OPM review of disputed claims under 5 CFR 890.105(e), subject to the standards and timeframes set forth in 45 CFR 147.136(d).

(b) *Notice.* Notices to MSP enrollees regarding external review under paragraph (a) of this section must comply with 45 CFR 147.136(e), and are subject to review and approval by OPM.

(c) *Issuer obligation.* An MSPP issuer must pay a claim or provide a health-related service or supply pursuant to OPM's final decision or the final decision of an independent review organization without delay, regardless of whether the plan or issuer intends to seek judicial review of the external review decision and unless or until there is a judicial decision otherwise.

§ 800.504 Judicial review.

(a) OPM's written decision under the external review process established under § 800.503(a) will constitute final agency action that is subject to review under the Administrative Procedure Act in the appropriate U.S. district court. A decision made by an independent review organization under the process established under § 800.503(a) is not within OPM's discretion and therefore is not final agency action.

(b) Judicial review under paragraph (a) of this section is limited to the record that was before OPM when OPM made its decision.

Subpart G—Miscellaneous

§ 800.601 Reservation of authority.

OPM reserves the right to implement and supplement these regulations with written operational guidelines.

§ 800.602 Consumer choice with respect to certain services.

(a) *Assured availability of varied coverage.* Consistent with § 800.104, OPM will ensure that at least one of the MSPP issuers on each Exchange in each State offers at least one MSP that does not provide coverage of services described in section 1303(b)(1)(B)(i) of the Affordable Care Act.

(b) *State opt-out.* An MSP may not offer abortion coverage in any State where such coverage of abortion services is prohibited by State law.

[FR Doc. 2013–04954 Filed 3–1–13; 11:15 am]

BILLING CODE 6325–64–P

Reader Aids

Federal Register

Vol. 78, No. 47

Monday, March 11, 2013

CUSTOMER SERVICE AND INFORMATION

Federal Register/Code of Federal Regulations	
General Information, indexes and other finding aids	**202–741–6000**
Laws	**741–6000**
Presidential Documents	
Executive orders and proclamations	**741–6000**
The United States Government Manual	**741–6000**
Other Services	
Electronic and on-line services (voice)	**741–6020**
Privacy Act Compilation	**741–6064**
Public Laws Update Service (numbers, dates, etc.)	**741–6043**
TTY for the deaf-and-hard-of-hearing	**741–6086**

ELECTRONIC RESEARCH

World Wide Web

Full text of the daily Federal Register, CFR and other publications is located at: **www.fdsys.gov.**

Federal Register information and research tools, including Public Inspection List, indexes, and links to GPO Access are located at: **www.ofr.gov.**

E-mail

FEDREGTOC-L (Federal Register Table of Contents LISTSERV) is an open e-mail service that provides subscribers with a digital form of the Federal Register Table of Contents. The digital form of the Federal Register Table of Contents includes HTML and PDF links to the full text of each document.

To join or leave, go to **http://listserv.access.gpo.gov** and select *Online mailing list archives, FEDREGTOC-L, Join or leave the list (or change settings);* then follow the instructions.

PENS (Public Law Electronic Notification Service) is an e-mail service that notifies subscribers of recently enacted laws.

To subscribe, go to **http://listserv.gsa.gov/archives/publaws-l.html** and select *Join or leave the list (or change settings);* then follow the instructions.

FEDREGTOC-L and **PENS** are mailing lists only. We cannot respond to specific inquiries.

Reference questions. Send questions and comments about the Federal Register system to: **fedreg.info@nara.gov**

The Federal Register staff cannot interpret specific documents or regulations.

Reminders. Effective January 1, 2009, the Reminders, including Rules Going Into Effect and Comments Due Next Week, no longer appear in the Reader Aids section of the Federal Register. This information can be found online at **http://www.regulations.gov.**

CFR Checklist. Effective January 1, 2009, the CFR Checklist no longer appears in the Federal Register. This information can be found online at **http://bookstore.gpo.gov/.**

FEDERAL REGISTER PAGES AND DATE, MARCH

13771–13998 1
13999–14154 4
14155–14428 5
14429–14634 6
14635–14906 7
14907–15276 8
15277–15596 11

CFR PARTS AFFECTED DURING MARCH

At the end of each month the Office of the Federal Register publishes separately a List of CFR Sections Affected (LSA), which lists parts and sections affected by documents published since the revision date of each title.

3 CFR

Proclamations:
8933 14429
8934 14431
8935 14433
8936 14435
8937 14627
8938 14629
8939 14631

Administrative Orders:
Memorandum of February 20, 2013 13997
Notice of March 1, 2013 (see EO 13288 of 3/6/2003; EO 13391 of 11/22/2005; EO 13469 of 7/25/2008) 14427
Order of March 1, 2013 14633

5 CFR

2640 14437

Proposed Rules:
850 14233

7 CFR

7 13771
51 14907
205 13776
761 13999
762 13999
905 13777
1230 14909

Proposed Rules:
905 14236

9 CFR

417 14635
424 14636

10 CFR

Proposed Rules:
170 14880
171 14800
430 .....14467, 14717
431 14024

12 CFR

Proposed Rules:
234 14024

14 CFR

25 .....14005, 14007, 14155
39 .....14158, 14160, 14162, 14164, 14442, 14640, 14642, 14644, 14647, 15277, 15279, 15281
71 .....14649, 14651, 14652, 14653, 14909, 14911
97 .....14009, 14010
117 14166
121 14166
129 14912
254 14913

Proposed Rules:
25 13835
39 .....14029, 14467, 14469, 14719, 14722, 14726, 14729, 14731, 14734, 14934, 15332, 15335
71 .....13843, 14031, 14032, 14473, 14474, 14475, 14477, 14478, 14479

15 CFR

744 14914

Proposed Rules:
400 14238

17 CFR

201 14179

18 CFR

38 14654

19 CFR

12 14183

20 CFR

1001 15283

21 CFR

73 14664
172 14664
173 14664
176 14664
177 14664
178 14664
184 14664
189 .....14012, 14664
510 14667
520 14667
522 14667
529 14667
558 14667
700 14012
890 .....14013, 14015

25 CFR

11 14017

Proposed Rules:

26 CFR

Proposed Rules:
1 15337
57 14034
301 .....14939, 15337

27 CFR

Proposed Rules:
9 14046

28 CFR

16 14669

29 CFR

2520 13781
2560 13797
2571 13797

33 CFR

100 13811
117 ..... 14185, 14444, 14446, 15292, 15293
165 ..... 13811, 14185, 14188, 15293

34 CFR

Proposed Rules:
Ch. III 14480, 14483, 14947

36 CFR

7 ..... 14447, 14673

40 CFR

52 ..... 14020, 14450, 14681, 15296
55 14917
60 14457
63 14457
80 14190
136 14457
180 14461
271 15299
Proposed Rules:
147 14951
180 14487
271 15338
372 14241

42 CFR

412 14689

44 CFR

64 14694
67 ..... 14697, 14700
Proposed Rules:
67 ..... 14737, 14738
201 13844
204 14740

45 CFR

153 ..... 15410, 15541
155 15410
156 ..... 15410, 15541
157 15410
158 15410
800 15560
Proposed Rules:
155 15553
156 15553

46 CFR

Proposed Rules:
67 14053

47 CFR

2 14920
25 14920
54 13936
64 14701
Proposed Rules:
2 14952
54 14957
73 ..... 14060, 14490

48 CFR

Proposed Rules:
4 14746
13 14746
14 14746
15 14746
19 14746

49 CFR

105 15303
171 15303
172 ..... 14702, 15303
173 ..... 14702, 15303
176 14702
177 15303
178 ..... 14702, 15303
180 15303
219 14217
Proposed Rules:
571 13853

50 CFR

17 14022
622 14225
648 ..... 13812, 14226, 14230
679 ..... 13812, 13813, 14465, 14932
Proposed Rules:
17 14245
20 14060
100 14755
300 14490
622 ..... 14069, 14503, 15338
660 14259
679 14490

LIST OF PUBLIC LAWS

This is a continuing list of public bills from the current session of Congress which have become Federal laws. It may be used in conjunction with "P L U S" (Public Laws Update Service) on 202–741–6043. This list is also available online at *http://www.archives.gov/federal-register/laws*.

The text of laws is not published in the **Federal Register** but may be ordered in "slip law" (individual pamphlet) form from the Superintendent of Documents, U.S. Government Printing Office, Washington, DC 20402 (phone, 202–512–1808). The text will also be made available on the Internet from GPO's Federal Digital System (FDsys) at *http://www.gpo.gov/fdsys*. Some laws may not yet be available.

H.R. 325/P.L. 113–3

No Budget, No Pay Act of 2013 (Feb. 4, 2013; 127 Stat. 51)

Last List January 31, 2013

Public Laws Electronic Notification Service (PENS)

PENS is a free electronic mail notification service of newly enacted public laws. To subscribe, go to *http://listserv.gsa.gov/archives/publaws-l.html*

Note: This service is strictly for E-mail notification of new laws. The text of laws is not available through this service. **PENS** cannot respond to specific inquiries sent to this address.