AUTHENTICATED
U.S. GOVERNMENT
INFORMATION
GPO

FEDERAL REGISTER

Vol. 78 Friday,

No. 96 May 17, 2013

Pages 29019–29232

OFFICE OF THE FEDERAL REGISTER

The **FEDERAL REGISTER** (ISSN 0097–6326) is published daily, Monday through Friday, except official holidays, by the Office of the Federal Register, National Archives and Records Administration, Washington, DC 20408, under the Federal Register Act (44 U.S.C. Ch. 15) and the regulations of the Administrative Committee of the Federal Register (1 CFR Ch. I). The Superintendent of Documents, U.S. Government Printing Office, Washington, DC 20402 is the exclusive distributor of the official edition. Periodicals postage is paid at Washington, DC.

The **FEDERAL REGISTER** provides a uniform system for making available to the public regulations and legal notices issued by Federal agencies. These include Presidential proclamations and Executive Orders, Federal agency documents having general applicability and legal effect, documents required to be published by act of Congress, and other Federal agency documents of public interest.

Documents are on file for public inspection in the Office of the Federal Register the day before they are published, unless the issuing agency requests earlier filing. For a list of documents currently on file for public inspection, see *www.ofr.gov.*

The seal of the National Archives and Records Administration authenticates the Federal Register as the official serial publication established under the Federal Register Act. Under 44 U.S.C. 1507, the contents of the **Federal Register** shall be judicially noticed.

The **Federal Register** is published in paper and on 24x microfiche. It is also available online at no charge at *www.fdsys.gov*, a service of the U.S. Government Printing Office.

The online edition of the **Federal Register** is issued under the authority of the Administrative Committee of the Federal Register as the official legal equivalent of the paper and microfiche editions (44 U.S.C. 4101 and 1 CFR 5.10). It is updated by 6:00 a.m. each day the **Federal Register** is published and includes both text and graphics from Volume 59, 1 (January 2, 1994) forward. For more information, contact the GPO Customer Contact Center, U.S. Government Printing Office. Phone 202-512-1800 or 866-512-1800 (toll free). E-mail, *gpo@custhelp.com.*

The annual subscription price for the **Federal Register** paper edition is $749 plus postage, or $808, plus postage, for a combined **Federal Register, Federal Register** Index and List of CFR Sections Affected (LSA) subscription; the microfiche edition of the **Federal Register** including the **Federal Register** Index and LSA is $165, plus postage. Six month subscriptions are available for one-half the annual rate. The prevailing postal rates will be applied to orders according to the delivery method requested. The price of a single copy of the daily **Federal Register,** including postage, is based on the number of pages: $11 for an issue containing less than 200 pages; $22 for an issue containing 200 to 400 pages; and $33 for an issue containing more than 400 pages. Single issues of the microfiche edition may be purchased for $3 per copy, including postage. Remit check or money order, made payable to the Superintendent of Documents, or charge to your GPO Deposit Account, VISA, MasterCard, American Express, or Discover. Mail to: U.S. Government Printing Office—New Orders, P.O. Box 979050, St. Louis, MO 63197-9000; or call toll free 1-866-512-1800, DC area 202-512-1800; or go to the U.S. Government Online Bookstore site, see *bookstore.gpo.gov.*

There are no restrictions on the republication of material appearing in the **Federal Register.**

How To Cite This Publication: Use the volume number and the page number. Example: 77 FR 12345.

Postmaster: Send address changes to the Superintendent of Documents, Federal Register, U.S. Government Printing Office, Washington, DC 20402, along with the entire mailing label from the last issue received.

SUBSCRIPTIONS AND COPIES

PUBLIC

Subscriptions:

Paper or fiche	**202–512–1800**
Assistance with public subscriptions	**202–512–1806**

General online information **202–512–1530; 1–888–293–6498**

Single copies/back copies:

Paper or fiche	**202–512–1800**
Assistance with public single copies	**1–866–512–1800 (Toll-Free)**

FEDERAL AGENCIES

Subscriptions:

Paper or fiche	**202–741–6005**
Assistance with Federal agency subscriptions	**202–741–6005**

FEDERAL REGISTER WORKSHOP

THE FEDERAL REGISTER: WHAT IT IS AND HOW TO USE IT

FOR: Any person who uses the Federal Register and Code of Federal Regulations.

WHO: Sponsored by the Office of the Federal Register.

WHAT: Free public briefings (approximately 3 hours) to present:

1. The regulatory process, with a focus on the Federal Register system and the public's role in the development of regulations.
2. The relationship between the Federal Register and Code of Federal Regulations.
3. The important elements of typical Federal Register documents.
4. An introduction to the finding aids of the FR/CFR system.

WHY: To provide the public with access to information necessary to research Federal agency regulations which directly affect them. There will be no discussion of specific agency regulations.

WHEN: Tuesday, June 11, 2013
9 a.m.–12:30 p.m.

WHERE: Office of the Federal Register
Conference Room, Suite 700
800 North Capitol Street, NW.
Washington, DC 20002

RESERVATIONS: (202) 741–6008

Printed on recycled paper.

Contents

Federal Register

Vol. 78, No. 96

Friday, May 17, 2013

Agricultural Marketing Service
NOTICES
Meetings:
Advisory Committee on Universal Cotton Standards, 29111–29112

Agriculture Department
See Agricultural Marketing Service
See Forest Service
NOTICES
Agency Information Collection Activities; Proposals, Submissions, and Approvals, 29111

Air Force Department
NOTICES
Agency Information Collection Activities; Proposals, Submissions, and Approvals, 29122–29124

Army Department
RULES
Individual Requests for Access or Amendment of CID Reports of Investigation, 29019
NOTICES
Environmental Impact Statements; Availability, etc.:
Implementation of Energy, Water, and Solid Waste Sustainability Initiatives at Fort Bliss, TX, 29124

Blind or Severely Disabled, Committee for Purchase From People Who Are
See Committee for Purchase From People Who Are Blind or Severely Disabled

Centers for Medicare & Medicaid Services
NOTICES
Agency Information Collection Activities; Proposals, Submissions, and Approvals, 29135–29139
Medicare Program:
Bundled Payments for Care Improvement Model 1 Open Period, 29139–29140

Children and Families Administration
NOTICES
Agency Information Collection Activities; Proposals, Submissions, and Approvals:
Subsidized and Transitional Employment Demonstration and Enhanced Transitional Jobs Demonstration, 29140

Coast Guard
RULES
Drawbridge Operations:
Neches River, Beaumont, TX, 29020
Safety Zones:
Annual Firework Displays within the Captain of the Port, Puget Sound Area of Responsibility, 29023–29025
Fourth of July Fireworks; Berkeley Marina; Berkeley, CA, 29022–29023
Sea World San Diego Fireworks 2013 Season; Mission Bay, San Diego, CA, 29025–29027
Tennessee River, Mile 463.5 to 464.5, Chattanooga, TN, 29020–29022
PROPOSED RULES
Safety Zones:
Coronado Fourth of July Fireworks, Glorietta Bay, Coronado, CA, 29094–29096
Discovery World Fireworks, Milwaukee Harbor, Milwaukee, WI, 29086–29088
Hawaiian Island Commercial Harbors, HI, 29089–29091
Outer Banks Bluegrass Festival, Shallowbag Bay, Manteo, NC, 29091–29094
NOTICES
New Proposed Categorical Exclusion for Real Property Disposal under the National Environmental Policy Act, 29145–29147

Commerce Department
See Foreign-Trade Zones Board
See International Trade Administration
See National Oceanic and Atmospheric Administration
See Patent and Trademark Office
NOTICES
Agency Information Collection Activities; Proposals, Submissions, and Approvals, 29113

Committee for Purchase From People Who Are Blind or Severely Disabled
NOTICES
Procurement List; Additions and Deletions, 29119–29120

Defense Department
See Air Force Department
See Army Department
See Navy Department
NOTICES
Environmental Impact Statements; Availability, etc.:
Main Operating Base 2, Beddown of KC–46A Tanker Aircraft, 29120–29121
Proposed Establishment and Expansion of Military Airspace in Support of the Oregon Air National Guard, Portland International Airport, Portland, and Kingsley Field, Klamath Falls, OR, 29120
Meetings:
Strategic Environmental Research and Development Program, Scientific Advisory Board, 29121–29122

Energy Department
See Federal Energy Regulatory Commission
NOTICES
Meetings:
Biomass Research and Development Technical Advisory Committee, 29125–29126
Nuclear Energy Advisory Committee, 29125

Environmental Protection Agency
RULES
Air Quality Implementation Plans; Approvals and Promulgations:
Tennessee; Revisions to Volatile Organic Compound Definition, 29032–29034
Tennessee; Transportation Conformity Revisions, 29027–29032
Pesticide Tolerances:
Sulfoxaflor, 29041–29049

Pesticide Tolerances; Emergency Exemptions:
Streptomycin, 29049–29055
Protection of Stratospheric Ozone:
Determination 28 for Significant New Alternatives Policy Program, 29034–29041
PROPOSED RULES
Air Quality Implementation Plans; Approvals and Promulgations:
Tennessee; Transportation Conformity Revisions, 29096–29097
NOTICES
Environmental Impact Statements; Availability, etc., 29131–29132
Meetings:
Good Neighbor Environmental Board; Teleconference, 29132
Transfers of Data:
Environmental Management Resources, Inc., 29132–29133

Federal Communications Commission
RULES
2006 Biennial Regulatory Review, 29062–29063
Signal Booster Rules; Correction, 29062
Survey of Urban Rates for Fixed Voice and Fixed Broadband Residential Services, 29063–29071
PROPOSED RULES
Petition for Reconsideration of Action in Rulemaking Proceeding, 29097–29098
NOTICES
Agency Information Collection Activities; Proposals, Submissions, and Approvals, 29133–29134

Federal Deposit Insurance Corporation
NOTICES
Updated Listing of Financial Institutions in Liquidation, 29134

Federal Energy Regulatory Commission
RULES
Revisions to Electric Reliability Organization Definition of Bulk Electric System and Rules of Procedure, 29210–29231
NOTICES
Combined Filings, 29126–29130
Initial Market-Based Rate Filings Including Requests for Blanket Section 204 Authorizations:
Electricity MASS, LLC, 29131
Solar Star California XIX, LLC, 29130–29131
Solar Star California XX, LLC, 29131

Federal Highway Administration
NOTICES
Environmental Impact Statements; Availability, etc.:
Grand Forks County, ND and Polk County, MN, 29202

Federal Railroad Administration
NOTICES
Agency Information Collection Activities; Proposals, Submissions, and Approvals, 29202–29203

Federal Reserve System
NOTICES
Proposals to Engage in or to Acquire Companies Engaged in Permissible Nonbanking Activities, 29134

Federal Transit Administration
NOTICES
Agency Information Collection Activities; Proposals, Submissions, and Approvals, 29203–29205

Fish and Wildlife Service
NOTICES
Permits:
Endangered and Threatened Wildlife and Plants; Recovery, 29150–29151

Food and Drug Administration
NOTICES
Draft Guidance for Industry and FDA Staff; Availability:
Center for Devices and Radiological Health Appeals Processes: Questions and Answers about 517A, 29140–29141
Guidance for Industry and FDA Staff; Availability:
Center for Devices and Radiological Health Appeals Processes, 29141–29142
Meetings:
Anesthetic and Analgesic Drug Products Advisory Committee, 29142–29143

Foreign-Trade Zones Board
NOTICES
Reorganizations under Alternative Site Framework:
Foreign-Trade Zone 241, Fort Lauderdale, FL, 29113

Forest Service
NOTICES
Meetings:
Hiawatha East Resource Advisory Committee, 29112

Health and Human Services Department
See Centers for Medicare & Medicaid Services
See Children and Families Administration
See Food and Drug Administration
See Health Resources and Services Administration
See Inspector General Office, Health and Human Services Department
See National Institutes of Health
NOTICES
HIT Standards Committee:
Schedule for Assessment of HIT Policy Committee Recommendations, 29134–29135
Meetings:
HIT Standards Committee, 29135

Health Resources and Services Administration
NOTICES
Meetings:
Advisory Commission on Childhood Vaccines, 29143–29144

Homeland Security Department
See Coast Guard
See Secret Service
NOTICES
Meetings:
President's National Security Telecommunications Advisory Committee; Correction, 29145

Housing and Urban Development Department
NOTICES
Federal Properties Suitable as Facilities to Assist Homeless, 29147–29150

Inspector General Office, Health and Human Services Department

RULES
State Medicaid Fraud Control Units:
Data Mining, 29055–29061

Interior Department
See Fish and Wildlife Service
See Land Management Bureau
See National Park Service

Internal Revenue Service
NOTICES
Agency Information Collection Activities; Proposals, Submissions, and Approvals, 29205–29207
Meetings:
Taxpayer Advocacy Panel Toll-Free Phone Line Project Committee, 29207

International Trade Administration
NOTICES
Antidumping Duty Administrative Reviews; Results, Amendments, Extensions, etc.:
Certain Cut-to-Length Carbon-Quality Steel Plate Products from the Republic of Korea, 29113–29114

International Trade Commission
NOTICES
Complaints:
Certain Digital Media Devices, Including Televisions, Blu-Ray Disc Players, Home Theater Systems, Tablets and Mobile Phones, etc., 29156–29157
Investigations: Terminations, Modifications, Rulings, etc.:
Certain Digital Models, Digital Data, and Treatment Plans for Use, in Making Incremental Dental Positioning Adjustment Appliances Made Therefrom, and Methods of Making the Same, 29157–29158

Land Management Bureau
NOTICES
Environmental Impact Statements; Availability, etc.:
Draft Resource Management Plan, Dominguez–Escalante National Conservation Area, CO, 29153–29155
Proposed Mohave County Wind Farm Project, AZ, 29151–29153
Plats of Survey:
Montana, 29155

National Endowment for the Arts
NOTICES
Agency Information Collection Activities; Proposals, Submissions, and Approvals, 29158

National Foundation on the Arts and the Humanities
See National Endowment for the Arts

National Institutes of Health
NOTICES
Meetings:
Center for Scientific Review, 29144–29145
National Institute of Arthritis and Musculoskeletal and Skin Diseases, 29144
National Institute of Neurological Disorders and Stroke, 29144

National Oceanic and Atmospheric Administration
PROPOSED RULES
Endangered and Threatened Wildlife:
90-Day Finding on a Petition to List Iliamna Lake Seals, 29098–29100
90-Day Finding on Petitions to List the Dusky Shark as Threatened or Endangered, 29100–29110
NOTICES
Applications:
Endangered Species; File No. 17304, 29114–29115
Meetings:
Gulf of Mexico Fishery Management Council, 29116
New England Fishery Management Council, 29116
North Pacific Fishery Management Council, 29115–29117
Pacific Fishery Management Council, 29115–29116
Permits:
Marine Mammals; File No. 17005, 29117

National Park Service
NOTICES
National Register of Historic Places:
Pending Nominations and Related Actions, 29155–29156

Navy Department
NOTICES
Meetings:
U.S. Naval Academy Board of Visitors, 29124–29125

Nuclear Regulatory Commission
NOTICES
Facility Operating Licenses; Transfers:
Zion Solutions, LLC, Zion Nuclear Power Station, Units 1 and 2, 29158–29159
Meetings:
Advisory Committee on Reactor Safeguards Subcommittee on Materials, Metallurgy and Reactor Fuels, 29159
Seismic Evaluation Guidance:
Electric Power Research Institute, 29159–29162

Patent and Trademark Office
NOTICES
After Final Consideration Pilot Program 2.0, 29117–29119

Secret Service
NOTICES
Agency Information Collection Activities; Proposals, Submissions, and Approvals, 29147

Securities and Exchange Commission
NOTICES
Agency Information Collection Activities; Proposals, Submissions, and Approvals, 29162
Meetings; Sunshine Act, 29162–29163
Self-Regulatory Organizations; Proposed Rule Changes:
Chicago Mercantile Exchange Inc., 29163–29165
Depository Trust Co., 29186–29187
Financial Industry Regulatory Authority, Inc., 29190–29193
NASDAQ Stock Market LLC, 29187–29190, 29193–29199
New York Stock Exchange LLC, 29165–29186
Trading Suspension Orders:
Avani International Group, Inc.; Birch Mountain Resources Ltd.; Capital Reserve Canada Ltd. et al., 29199–29200
Benda Pharmaceutical, Inc., and China Shuangjii Cement Ltd., 29200
Griffin Mining, Inc.; Power Sports Factory, Inc.; Star Energy Corp. et al., 29200

State Department
NOTICES
Charter Renewals:
Advisory Committee for the Study of Eastern Europe and the Independent States of the Former Soviet Union, 29200
Designations as Foreign Terrorist:
Abu Muhammad al–Jawlani, aka al–Fatih, aka Abu Muhammad al–Golani, 29200–29201
Environmental Assessments; Availability, etc.:
Vantage Pipeline US LP Ethane Pipeline Project, 29201
Meetings:
Shipping Coordinating Committee, 29201–29202

Surface Transportation Board
RULES
Mediation and Arbitration Procedures, 29071–29085

Transportation Department
See Federal Highway Administration
See Federal Railroad Administration
See Federal Transit Administration
See Surface Transportation Board

Treasury Department
See Internal Revenue Service

Separate Parts In This Issue

Part II
Energy Department, Federal Energy Regulatory Commission, 29210–29231

Reader Aids

Consult the Reader Aids section at the end of this page for phone numbers, online resources, finding aids, reminders, and notice of recently enacted public laws.

To subscribe to the Federal Register Table of Contents LISTSERV electronic mailing list, go to http://listserv.access.gpo.gov and select Online mailing list archives, FEDREGTOC-L, Join or leave the list (or change settings); then follow the instructions.

CFR PARTS AFFECTED IN THIS ISSUE

A cumulative list of the parts affected this month can be found in the Reader Aids section at the end of this issue.

18 CFR
40 29210

32 CFR
633 29019

33 CFR
117 29020
165 (4 documents) 29020, 29022, 29023, 29025

Proposed Rules:
165 (4 documents) 29086, 29089, 29091, 29094

40 CFR
52 (2 documents) 29027, 29032
82 29034
180 (2 documents) 29041, 29049

Proposed Rules:
52 29096

42 CFR
1007 29055

47 CFR
2 29062
25 29062
54 29063

Proposed Rules:
54 (2 documents) 29097

49 CFR
1002 29071
1011 29071
1108 29071
1109 29071
1111 29071
1115 29071

50 CFR

Proposed Rules:
223 (2 documents) 29098, 29100
224 (2 documents) 29098, 29100

Rules and Regulations

Federal Register

Vol. 78, No. 96

Friday, May 17, 2013

This section of the FEDERAL REGISTER contains regulatory documents having general applicability and legal effect, most of which are keyed to and codified in the Code of Federal Regulations, which is published under 50 titles pursuant to 44 U.S.C. 1510.

The Code of Federal Regulations is sold by the Superintendent of Documents. Prices of new books are listed in the first FEDERAL REGISTER issue of each week.

DEPARTMENT OF DEFENSE

Department of the Army

32 CFR Part 633

Individual Requests for Access or Amendment of CID Reports of Investigation

AGENCY: Department of the Army, DoD.

ACTION: Final rule.

SUMMARY: The Department of the Army is amending its rule on Individual Requests for Access or Amendment of CID Reports of Investigation to correct the mailing address in its regulations. The address for submitting requests for access to, or amendment of, USACIDC investigative reports has changed. This rule also replaces the obsolete ''Release of Information Records from Army Files'' publication with the ''Freedom of Information Act'' publication.

DATES: This rule is effective May 17, 2013.

FOR FURTHER INFORMATION CONTACT: Ms. Michelle A. Kardelis, (571) 305–4204, email: *michelle.a.kardelis.civ@mail.mil.*

SUPPLEMENTARY INFORMATION:

A. Executive Summary

I. Purpose of the Regulatory Action

The publication of this final rule will ensure the correct mailing address for submission of access to or amendment of USACIDC investigative reports. In addition, the rule will replace an obsolete publication (AR 340–17) and replace it with the existing Freedom of Information Act (AR 25–55) publication in reference to accessing CID reports.

II. Summary of the Major Provisions of the Regulatory Action in Question

The major provisions of this rule include: the correct mailing address for submission of access to or amendment of USACIDC investigative and the replacement of an obsolete publication for accessing CID reports.

III. Cost and Benefits

This rule will not have a monetary effect upon the public.

B. Regulatory Flexibility Act

The Department of the Army has determined that the Regulatory Flexibility Act does not apply because the rule change does not have a significant economic impact on a substantial number of small entities within the meaning of the Regulatory Flexibility Act, 5 U.S.C. 601–612.

C. Unfunded Mandates Reform Act

The Department of the Army has determined that the Unfunded Mandates Reform Act does not apply because the rule change does not include a mandate that may result in estimated costs to State, local or tribal governments in the aggregate, or the private sector, of $100 million or more.

D. National Environmental Policy Act

The Department of the Army has determined that the National Environmental Policy Act does not apply because the rule change does not have an adverse impact on the environment.

E. Paperwork Reduction Act

The Department of the Army has determined that the Paperwork Reduction Act does not apply because the rule change does not involve collection of information from the public.

F. Executive Order 12630 (Government Actions and Interference With Constitutionally Protected Property Rights)

The Department of the Army has determined that Executive Order 12630 does not apply because the rule change does not impair private property rights.

G. Executive Order 12866 (Regulatory Planning and Review) and Executive Order 13563 (Improving Regulation and Regulatory Review)

The Department of the Army has determined that according to the criteria defined in Executive Order 12866 and Executive Order 13563 this rule is not a significant regulatory action. As such, the rule is not subject to Office of Management and Budget review under section 6(a)(3) of the Executive Order.

H. Executive Order 13045 (Protection of Children From Environmental Health Risk and Safety Risks)

The Department of the Army has determined that according to the criteria defined in Executive Order 13045 this rule does not apply.

I. Executive Order 13132 (Federalism)

The Department of the Army has determined that according to the criteria defined in Executive Order 13132 that Executive Order does not apply because the rule does not apply because it will not have a substantial effect on the States, on the relationship between the national government and the States, or on the distribution of power and responsibilities among the various levels of government.

Susan Cuglar,

Director, U.S. Army Crime Records Center.

List of Subjects in 32 CFR Part 633

Freedom of information, Investigation, Privacy.

For reasons stated in the preamble 32 CFR part 633 is amended as follows:

PART 633—INDIVIDUAL REQUEST FOR ACCESS OR AMENDMENT OF CID REPORTS OF INVESTIGATION

■ 1. The authority citation for part 633 continues to read as follows:

Authority: Sec. 3012, 70A Stat. 157; 10 U.S.C. 3012.

■ 2. Revise § 633.11 to read as follows:

§ 633.11 Access to CID reports.

All requests for access to CID reports made under the Privacy or Freedom of Information Acts will be processed in accordance with AR 340–21 and AR 25–55, respectively.

■ 3. Revise § 633.13 to read as follows:

§ 633.13 Submission of requests.

Requests for access to, or amendment of, USACIDC investigative reports will be forwarded to the Director, U.S. Army Crime Records Center (CICR–FP), 27130 Telegraph Road, Quantico, VA 22134.

[FR Doc. 2013–11734 Filed 5–16–13; 8:45 am]

BILLING CODE 3710–08–P

DEPARTMENT OF HOMELAND SECURITY

Coast Guard

33 CFR Part 117

[Docket No. USCG–2013–0360]

Drawbridge Operation Regulation; Neches River, Beaumont, TX

AGENCY: Coast Guard, DHS.

ACTION: Notice of deviation from drawbridge regulation.

SUMMARY: The Coast Guard has issued a temporary deviation from the operating schedule that governs the Kansas City Southern vertical lift span bridge across the Neches River, mile 19.5, at Beaumont, Texas. The deviation is necessary to replace the north vertical lift joints on the bridge. This deviation allows the bridge to remain closed to navigation for twelve consecutive hours.

DATES: This deviation is effective from 6 a.m. through 6 p.m. on Tuesday, June 4, 2013.

ADDRESSES: The docket for this deviation, [USCG–2013–0360] is available at *http://www.regulations.gov.* Type the docket number in the ''SEARCH'' box and click ''SEARCH.'' Click on Open Docket Folder on the line associated with this deviation. You may also visit the Docket Management Facility in Room W12–140 on the ground floor of the Department of Transportation West Building, 1200 New Jersey Avenue SE., Washington, DC 20590, between 9 a.m. and 5 p.m., Monday through Friday, except Federal holidays.

FOR FURTHER INFORMATION CONTACT: If you have questions on this temporary deviation, call or email Kay Wade, Bridge Administration Branch, Coast Guard; telephone 504–671–2128, email *Kay.B.Wade@uscg.mil.* If you have questions on viewing the docket, call Barbara Hairston, Program Manager, Docket Operations, telephone 202–366–9826.

SUPPLEMENTARY INFORMATION: The Kansas City Southern Railroad has requested a temporary deviation from the operating schedule of the vertical lift span bridge across the Neches River at mile 19.5 in Beaumont, Texas. The vertical clearance of the bridge in the closed-to-navigation position is 13 feet above Mean High Water and 140 feet above Mean High Water in the open-to-navigation position.

In accordance with 33 CFR 117.971, the vertical lift span of the bridge is automated and normally not manned but will open on signal for the passage of vessels. This deviation allows the vertical lift span of the bridge to remain closed to navigation from 6 a.m. to 6 p.m. on Tuesday, June 4, 2013.

The closure is necessary in order to replace the north vertical lift joints on the bridge, which allow the bridge to be raised. This maintenance is essential for the continued operation of the bridge. Notices will be published in the Eighth Coast Guard District Local Notice to Mariners and will be broadcast via the Coast Guard Broadcast Notice to Mariners System.

Navigation on the waterway consists of commercial and recreational fishing vessels, small to medium crew boats, and small tugs with and without tows. No alternate routes are available for the passage of vessels; however, the closure was coordinated with waterway interests who have indicated that they will be able to adjust their operations around the proposed work schedule. Small vessels may pass under the bridge while in the closed-to-navigation position provided caution is exercised.

The bridge will be able to open manually in the event of an emergency, but it will take about one hour to do so.

Due to prior experience and coordination with waterway users, it has been determined that this closure will not have a significant effect on vessels that use the waterway.

In accordance with 33 CFR 117.35(e), the drawbridge must return to its regular operating schedule immediately at the end of the effective period of this temporary deviation. This deviation from the operating regulations is authorized under 33 CFR 117.35.

Dated: May 7, 2013.

David M. Frank,

Bridge Administrator.

[FR Doc. 2013–11827 Filed 5–16–13; 8:45 am]

BILLING CODE 9110–04–P

DEPARTMENT OF HOMELAND SECURITY

Coast Guard

33 CFR Part 165

[Docket No. USCG–2013–0075]

RIN 1625–AA00

Safety Zone; Tennessee River, Mile 463.5 to 464.5; Chattanooga, TN

AGENCY: Coast Guard, DHS.

ACTION: Temporary final rule.

SUMMARY: The Coast Guard is establishing a temporary safety zone for the waters of the Tennessee River beginning at mile marker 463.5 and ending at mile marker 464.5, extending bank to bank. This safety zone is necessary to protect persons and vessels from the potential safety hazards associated with the Riverbend Festival fireworks. Entry into this zone is prohibited unless specifically authorized by the Captain of the Port (COTP) Ohio Valley or designated representative.

DATES: This rule is effective from 10:30 p.m. until midnight on June 15, 2013.

ADDRESSES: Documents mentioned in this preamble are part of docket [USCG–2013–0075]. To view documents mentioned in this preamble as being available in the docket, go to *http://www.regulations.gov,* type the docket number in the ''SEARCH'' box and click ''SEARCH.'' Click on Open Docket Folder on the line associated with this rulemaking. You may also visit the Docket Management Facility in Room W12–140 on the ground floor of the Department of Transportation West Building, 1200 New Jersey Avenue SE., Washington, DC 20590, between 9 a.m. and 5 p.m., Monday through Friday, except Federal holidays.

FOR FURTHER INFORMATION CONTACT: If you have questions on this temporary rule, call Petty Officer James Alter, Marine Safety Detachment Nashville, U.S. Coast Guard; telephone (615) 736–5421, email *James.R.Alter@uscg.mil.* If you have questions on viewing or submitting material to the docket, call Barbara Hairston, Program Manager, Docket Operations, telephone (202) 366–9826.

SUPPLEMENTARY INFORMATION:

Table of Acronyms

DHS Department of Homeland Security
FR Federal Register
NPRM Notice of Proposed Rulemaking

A. Regulatory History and Information

The Coast Guard is issuing this temporary final rule without prior notice and opportunity to comment pursuant to authority under section 4(a) of the Administrative Procedure Act (APA) (5 U.S.C. 553(b)). This provision authorizes an agency to issue a rule without prior notice and opportunity to comment when the agency for good cause finds that those procedures are ''impracticable, unnecessary, or contrary to the public interest.'' Under 5 U.S.C. 553(b)(B), the Coast Guard finds that good cause exists for not publishing a notice of proposed rulemaking (NPRM) with respect to this rule because it is impracticable. Due to the need for immediate action, the restriction of vessel traffic is necessary to protect life, property and the environment;

therefore, a 30-day notice and comment period is impracticable. In the future, the Coast Guard intends to publish this event as an annual fireworks display requiring safety zones in the schedule located at 33 CFR 165.801.

Under 5 U.S.C. 553(d)(3), the Coast Guard finds that good cause exists for making this rule effective less than 30 days after publication in the **Federal Register**. Delay in the effective date will be contrary to the public interest. Immediate action is needed to ensure public safety in the vicinity of the fireworks launching area.

B. Basis and Purpose

The Coast Guard is issuing this safety zone under the authority of 33 U.S.C. 1231, 46 U.S.C. Chapter 701, 3306, 3703; 50 U.S.C. 191, 195; 33 CFR 1.05–1, 6.04–1, 6.04–6, 160.5, and 165 Subpart C; Pub. L. 107–295, 116 Stat. 2064; and Department of Homeland Security Delegation No. 0170.1, collectively authorize the Captain of the Port to establish and define regulatory safety zones.

The Captain of the Port Ohio Valley is establishing a safety zone for the waters of the Tennessee River, beginning at mile marker 463.5 and ending at 464.5 to protect persons and vessels from potential safety hazards associated with the Riverbend Festival fireworks. The Riverbend Festival fireworks display takes place on the Tennessee River and is launched from the right descending bank at mile marker 464.0. Fireworks displays taking place on or over a waterway pose possible hazards to the marine traffic and spectators on the waterway during the display. The Coast Guard determined that a temporary safety zone is needed to protect life and property during the fireworks display.

C. Discussion of the Final Rule

The Captain of the Port Ohio Valley is establishing a safety zone for the waters of the Tennessee River, beginning at mile marker 463.5 and ending at 464.5. Vessels shall not enter into, depart from, or move within this safety zone without permission from the Captain of the Port Ohio Valley or his authorized representative. Persons or vessels requiring entry into or passage through a safety zone must request permission from the Captain of the Port Ohio Valley, or a designated representative. They may be contacted on VHF–FM Channel 13 or 16, or through Coast Guard Sector Ohio Valley at 1–800–253–7465. This rule is effective, and will be enforced, from 10:30 p.m. until midnight on June 15, 2013. The Captain of the Port Ohio Valley will inform the public through broadcast notices to mariners of the enforcement period for the safety zone as well as any changes in the planned schedule.

D. Regulatory Analyses

We developed this rule after considering numerous statutes and executive orders related to rulemaking. Below we summarize our analyses based on a number of these statutes or executive orders.

1. Regulatory Planning and Review

This rule is not a significant regulatory action under section 3(f) of Executive Order 12866, Regulatory Planning and Review, as supplemented by Executive Order 13563, Improving Regulation and Regulatory Review, and does not require an assessment of potential costs and benefits under section 6(a)(3) of Executive Order 12866 or under section 1 of Executive Order 13563. The Office of Management and Budget has not reviewed it under that Order.

This safety zone restricts transit on the Tennessee River from mile marker 463.5 through 464.5 and covers a period of one and a half hour period, from 10:30 p.m. through midnight on June 15, 2013. Due to its short duration and limited scope, it does not pose a significant regulatory impact. Broadcast Notices to Mariners will also inform the community of this safety zone so that they may plan accordingly for this short restriction on transit. Vessel traffic may request permission from the COTP Ohio Valley or a designated representative to enter the restricted area.

2. Impact on Small Entities

The Regulatory Flexibility Act of 1980 (RFA), 5 U.S.C. 601–612, as amended, requires federal agencies to consider the potential impact of regulations on small entities during rulemaking. The term ''small entities'' comprises small businesses, not-for-profit organizations that are independently owned and operated and are not dominant in their fields, and governmental jurisdictions with populations of less than 50,000. The Coast Guard certifies under 5 U.S.C. 605(b) that this rule will not have a significant economic impact on a substantial number of small entities.

3. Assistance for Small Entities

Under section 213(a) of the Small Business Regulatory Enforcement Fairness Act of 1996 (Pub. L. 104–121), we want to assist small entities in understanding this rule. If the rule would affect your small business, organization, or governmental jurisdiction and you have questions concerning its provisions or options for compliance, please contact the person listed in the **FOR FURTHER INFORMATION CONTACT**, above.

Small businesses may send comments on the actions of Federal employees who enforce, or otherwise determine compliance with, Federal regulations to the Small Business and Agriculture Regulatory Enforcement Ombudsman and the Regional Small Business Regulatory Fairness Boards. The Ombudsman evaluates these actions annually and rates each agency's responsiveness to small business. If you wish to comment on actions by employees of the Coast Guard, call 1–888–REG–FAIR (1–888–734–3247). The Coast Guard will not retaliate against small entities that question or complain about this rule or any policy or action of the Coast Guard.

4. Collection of Information

This rule will not call for a new collection of information under the Paperwork Reduction Act of 1995 (44 U.S.C. 3501–3520).

5. Federalism

A rule has implications for federalism under Executive Order 13132, Federalism, if it has a substantial direct effect on the States, on the relationship between the national government and the States, or on the distribution of power and responsibilities among the various levels of government. We have analyzed this rule under that Order and determined that this rule does not have implications for federalism.

6. Protest Activities

The Coast Guard respects the First Amendment rights of protesters. Protesters are asked to contact the person listed in the **FOR FURTHER INTFORMATION CONTACT** section to coordinate protest activities so that your message can be received without jeopardizing the safety or security of people, places or vessels.

7. Unfunded Mandates Reform Act

The Unfunded Mandates Reform Act of 1995 (2 U.S.C. 1531–1538) requires Federal agencies to assess the effects of their discretionary regulatory actions. In particular, the Act addresses actions that may result in the expenditure by a State, local, or tribal government, in the aggregate, or by the private sector of $100,000,000 (adjusted for inflation) or more in any one year. Though this rule will not result in such expenditure, we do discuss the effects of this rule elsewhere in this preamble.

8. Taking of Private Property

This rule will not cause a taking of private property or otherwise have taking implications under Executive Order 12630, Governmental Actions and Interference with Constitutionally Protected Property Rights.

9. Civil Justice Reform

This rule meets applicable standards in sections 3(a) and 3(b)(2) of Executive Order 12988, Civil Justice Reform, to minimize litigation, eliminate ambiguity, and reduce burden.

10. Protection of Children

We have analyzed this rule under Executive Order 13045, Protection of Children from Environmental Health Risks and Safety Risks. This rule is not an economically significant rule and does not create an environmental risk to health or risk to safety that may disproportionately affect children.

11. Indian Tribal Governments

This rule does not have tribal implications under Executive Order 13175, Consultation and Coordination with Indian Tribal Governments, because it does not have a substantial direct effect on one or more Indian tribes, on the relationship between the Federal Government and Indian tribes, or on the distribution of power and responsibilities between the Federal Government and Indian tribes.

12. Energy Effects

This action is not a ''significant energy action'' under Executive Order 13211, Actions Concerning Regulations That Significantly Affect Energy Supply, Distribution, or Use.

13. Technical Standards

This rule does not use technical standards. Therefore, we did not consider the use of voluntary consensus standards.

14. Environment

We have analyzed this rule under Department of Homeland Security Management Directive 023–01 and Commandant Instruction M16475.lD, which guide the Coast Guard in complying with the National Environmental Policy Act of 1969 (NEPA) (42 U.S.C. 4321–4370f), and have concluded this action is one of a category of actions that do not individually or cumulatively have a significant effect on the human environment. This rule involves establishing a temporary safety zone to provide safety for the spectators viewing the fireworks that are being launched on the Tennessee River at mile marker 463.5 in for a one and a half hour period on one day. This rule is categorically excluded, under figure 2–1, paragraph (34)(g), of the Instruction.

List of Subjects in 33 CFR Part 165

Harbors, Marine safety, Navigation (water), Reporting and recordkeeping requirements, Security measures, Waterways.

For the reasons discussed in the preamble, the Coast Guard amends 33 CFR part 165 as follows:

PART 165—REGULATED NAVIGATION AREAS AND LIMITED ACCESS AREAS

■ 1. The authority citation for part 165 continues to read as follows:

Authority: 33 U.S.C. 1231; 46 U.S.C. Chapter 701, 3306, 3703; 50 U.S.C. 191, 195; 33 CFR 1.05–1, 6.04–1, 6.04–6, and 160.5; Pub. L. 107–295, 116 Stat. 2064; Department of Homeland Security Delegation No. 0170.1.

■ 2. Add § 165.T08–0075 to read as follows:

§ 165.T08–0075 Safety Zone; Tennessee River, Miles 463.5 to 464.5, Chattanooga, TN.

(a) *Effective date.* This section is effective from 10:30 p.m. to midnight on June 15, 2013.

(b) *Location.* The following areas are safety zones: All waters of the Tennessee River, beginning at mile marker 463.5 and ending at mile marker 464.5.

(c) *Enforcement periods.* The safety zone described in paragraph (b) above will only be enforced from 10:30 p.m. until midnight on June 15, 2013. Additionally, mariners and other members of the public may contact the Coast Guard at 1–800–253–7465 to inquire about the status of the safety zone.

(d) *Regulations.* (1) In accordance with the general regulations in § 165.23 of this part, entry into this zone is prohibited unless authorized by the Captain of the Port Ohio Valley or designated personnel. Designated personnel include commissioned, warrant, and petty officers of the U.S. Coast Guard assigned to units under the operational control of the USCG Sector Ohio alley.

(2) Persons or vessels requiring entry into or passage through the zone must request permission from the Captain of the Port Ohio Valley or designated personnel. U. S. Coast Guard Sector Ohio Valley may be contacted on VHF Channel 13 or 16, or at 1–800–253–7465.

(3) All persons and vessels shall comply with the instructions of the Captain of the Port Ohio Valley and designated personnel.

(e) *Informational broadcasts:* The Captain of the Port Ohio Valley or designated personnel will inform the public through broadcast notice to mariners when the safety zone has been established and if there are changes to the enforcement period for this safety zone.

Dated: April 29, 2013.

L.W. Hewett,

Captain, U.S. Coast Guard, Captain of the Port Ohio Valley.

[FR Doc. 2013–11749 Filed 5–16–13; 8:45 am]

BILLING CODE 9110–04–P

DEPARTMENT OF HOMELAND SECURITY

Coast Guard

33 CFR Part 165

[Docket No. USCG–2013–0220]

Safety Zone; Fourth of July Fireworks, Berkeley Marina, Berkeley, CA

AGENCY: Coast Guard, DHS.

ACTION: Notice of enforcement of regulation.

SUMMARY: The Coast Guard will enforce the safety zone for the Berkeley Marina Fourth of July Fireworks display in the Captain of the Port, San Francisco area of responsibility during the dates and times noted below. This action is necessary to protect life and property of the maritime public from the hazards associated with the fireworks display. During the enforcement period, unauthorized persons or vessels are prohibited from entering into, transiting through, or anchoring in the safety zone, unless authorized by the Patrol Commander (PATCOM).

DATES: This regulation will be enforced from 9:30 p.m. to 10:15 p.m. on July 4, 2013.

FOR FURTHER INFORMATION CONTACT: If you have questions on this notice, call or email Lieutenant Junior Grade William Hawn, U.S. Coast Guard Sector San Francisco; telephone (415) 399–7442 or email at *D11-PF-MarineEvents@uscg.mil.*

SUPPLEMENTARY INFORMATION: The Coast Guard will enforce a 1,000 foot safety zone around the Berkeley Pier in approximate position 37°51′40″ N, 122°19′19″ W (NAD 83) from 9:30 p.m. until 10:15 p.m. on July 4, 2013. Upon the commencement of the 30 minute fireworks display scheduled to take place from 9:30 p.m. to 10 p.m. on July 4, 2013, the safety zone will encompass the navigable waters around and under the Berkeley Pier within a radius 1,000

feet in approximate position 37°51′40″ N, 122°19′19″ W (NAD 83) for the Berkeley Marina Fourth of July Fireworks display listed in 33 CFR 165.1191, Table 1, Item number 10. This safety zone will be in effect from 9:30 p.m. to 10:15 p.m. on July 4, 2013.

Under the provisions of 33 CFR 165.1191, unauthorized persons or vessels are prohibited from entering into, transiting through, or anchoring in the safety zone during all applicable effective dates and times, unless authorized to do so by the PATCOM. Additionally, each person who receives notice of a lawful order or direction issued by an official patrol vessel shall obey the order or direction. The PATCOM is empowered to forbid entry into and control the regulated area. The PATCOM shall be designated by the Commander, Coast Guard Sector San Francisco. The PATCOM may, upon request, allow the transit of commercial vessels through regulated areas when it is safe to do so.

This notice is issued under authority of 33 CFR 165.1191 and 5 U.S.C. 552(a). In addition to this notice in the **Federal Register,** the Coast Guard will provide the maritime community with extensive advance notification of the safety zone and its enforcement period via the Local Notice to Mariners.

If the Captain of the Port determines that the regulated area need not be enforced for the full duration stated in this notice, a Broadcast Notice to Mariners may be used to grant general permission to enter the regulated area.

Dated: April 19, 2013.

Gregory G. Stump,

Captain, U.S. Coast Guard, Captain of the Port San Francisco.

[FR Doc. 2013–11739 Filed 5–16–13; 8:45 am]

BILLING CODE 9110–04–P

DEPARTMENT OF HOMELAND SECURITY

Coast Guard

33 CFR Part 165

[Docket Number USCG–2012–1001]

RIN 1625–AA00

Safety Zones; Annual Firework Displays Within the Captain of the Port, Puget Sound Area of Responsibility

AGENCY: Coast Guard, DHS.

ACTION: Final rule.

SUMMARY: The Coast Guard is adding three new fireworks events and correcting the location of five existing events outlined in 33 CFR 165.1332 to ensure public safety during annual firework displays at various locations in the Captain of the Port, Puget Sound Area of Responsibility. When these safety zones are activated and subject to enforcement, this rule limits the movement of vessels within the established firework display areas. These additions and corrections are necessary to prevent injury and to protect life and property of the maritime public from hazards associated with firework displays.

DATES: This rule is effective June 17, 2013.

ADDRESSES: Documents mentioned in this preamble are part of docket [USCG–2012–1001]. To view documents mentioned in this preamble as being available in the docket, go to *http://www.regulations.gov,* type the docket number in the ''SEARCH'' box and click ''SEARCH.'' Click on Open Docket Folder on the line associated with this rulemaking. You may also visit the Docket Management Facility in Room W12–140 on the ground floor of the Department of Transportation West Building, 1200 New Jersey Avenue SE., Washington, DC 20590, between 9 a.m. and 5 p.m., Monday through Friday, except Federal holidays.

FOR FURTHER INFORMATION CONTACT: If you have questions on this rule, call or email ENS Nathaniel P. Clinger, Coast Guard Sector Puget Sound, Waterways Management Division, U.S. Coast Guard; telephone (206) 217–6045, email *SectorPugetSoundWWM@uscg.mil.* If you have questions on viewing or submitting material to the docket, call Barbara Hairston, Program Manager, Docket Operations, telephone (202) 366–9826.

SUPPLEMENTARY INFORMATION:

Table of Acronyms

COTP Captain of the Port
DHS Department of Homeland Security
FR Federal Register

A. Regulatory History and Information

The Coast Guard published a notice of proposed rulemaking, Safety Zones; Annual Firework Displays within the Captain of the Port (COTP), Puget Sound Area of Responsibility, Docket No. USCG–2012–1001 on February 5, 2013. The Coast Guard published the following temporary final rules; Multiple Firework Displays within the Captain of the Port, Puget Sound Area of Responsibility WA, Docket No. USCG–2010–0591 on July 2, 2010, Docket No. USCG–2011–0450 on June 8, 2011, and Docket No. USCG–2012–0488 on June 15, 2012. The Coast Guard received zero comments submitted via regulations.gov and received zero requests for public meeting for these regulations.

B. Basis and Purpose

This rule corrects the coordinates of five firework displays outlined in 33 CFR 165.1332, located within the greater Puget Sound Area, to accurately reflect the correct position of the firework displays. This rule also adds three new firework display locations, and changes the title of the rule to accurately reflect what is codified in 33 CFR 3.65–10. These actions are necessary in order to restrict vessel movement and reduce vessel congregation in the proximity of firework discharge sites to ensure maritime public safety.

C. Discussion of Comments, Changes and the Final Rule

This rule amends the following firework display positions: *City of Renton Fireworks;* coordinates are revised to read: Latitude 47°30.386′ N, longitude 122°12.502′ W. *Bainbridge Island Fireworks;* coordinates are revised to read: Latitude 47°37.142′ N, longitude 122°30.397′ W. *Port Townsend Sunrise Rotary;* coordinates are revised to read: Latitude 48°08.413′ N, longitude 122°45.531′ W. *Tacoma Freedom Fair;* coordinates are revised to read: Latitude 47°17.103′ N, longitude 122°28.410′ W. *Brewster 4th of July;* coordinates are revised to read: Latitude 48°05.362′ N, longitude 119°47.147′ W.

This rule adds the following firework displays: *Port Ludlow Fireworks,* latitude 47°55.161′ N, longitude 122°41.157′ W; *Boston Harbor 4th of July,* latitude 47°08.626′ N, longitude 122°54.149′ W; *Everett 4th of July,* latitude 48°00.672′ N, 122°13.391′ W.

Additionally, a further change is being made to *Port Townsend Sunrise Rotary.* Coordinates will be revised to read: Latitude 48°08.413′ N, longitude 122°45.531′ W as the original posting of this rule listed the latitude as 47°08.413′ N instead of the intended 48°08.413′ N. This change is a non-substantive substitution that does not change the originally intended size or shape of the safety zone.

These safety zones extend 450 yards from their launch site. This zone size allows for the use of up to a 16″ mortar shell in annual firework displays. However, safety zones will only be enforced for the appropriate size for the largest mortar shell used. These zones are nominal in size and are typically positioned in areas which allow for transit around the zone. Thus, these zones have an inconsequential impact

on the majority of waterway users. These zones are also short in duration and allow waterway users to enter or transit through the zone when deemed safe by the on-scene patrol commander. Through this action, the COTP intends to promote the safety of personnel, vessels, and facilities in the area.

D. Regulatory Analyses

We developed this rule after considering numerous statutes and executive orders related to rulemaking. Below we summarize our analyses based on these statutes and executive orders.

1. Regulatory Planning and Review

This rule is not a significant regulatory action under section 3(f) of Executive Order 12866, Regulatory Planning and Review, as supplemented by Executive Order 13563, Improving Regulation and Regulatory Review, and does not require an assessment of potential costs and benefits under section 6(a)(3) of Executive Order 12866 or under section 1 of Executive Order 13563. The Office of Management and Budget has not reviewed it under those Orders. The Coast Guard bases this finding on the fact that the safety zones listed will be in place for a limited period of time and are minimal in duration, and vessel traffic will be able to transit around the safety zones.

2. Impact on Small Entities

The Regulatory Flexibility Act of 1980 (RFA), 5 U.S.C. 601–612, as amended, requires federal agencies to consider the potential impact of regulations on small entities during rulemaking. The term ''small entities'' comprises small businesses, not-for-profit organizations that are independently owned and operated and are not dominant in their fields, and governmental jurisdictions with populations of less than 50,000. The Coast Guard received zero comments from the Small Business Administration on this rule. The Coast Guard certifies under 5 U.S.C. 605(b) that this rule will not have a significant economic impact on a substantial number of small entities. This rule affects the following entities, some of which may be small entities: the owners and operators of vessels intending to operate in the waters covered by the safety zone while it is in effect. This rule does not have a significant economic impact on a substantial number of small entities because the safety zones will be in place for limited periods of time and maritime traffic will still be able to transit around the safety zones. Maritime traffic may also request permission to transit through the zones from the COTP, Puget Sound or a Designated Representative.

3. Assistance for Small Entities

Under section 213(a) of the Small Business Regulatory Enforcement Fairness Act of 1996 (Pub. L. 104–121), we want to assist small entities in understanding this rule. If the rule would affect your small business, organization, or governmental jurisdiction and you have questions concerning its provisions or options for compliance, please contact the person listed in the **FOR FURTHER INFORMATION CONTACT**, above.

Small businesses may send comments on the actions of Federal employees who enforce, or otherwise determine compliance with, Federal regulations to the Small Business and Agriculture Regulatory Enforcement Ombudsman and the Regional Small Business Regulatory Fairness Boards. The Ombudsman evaluates these actions annually and rates each agency's responsiveness to small business. If you wish to comment on actions by employees of the Coast Guard, call 1–888–REG–FAIR (1–888–734–3247). The Coast Guard will not retaliate against small entities that question or complain about this rule or any policy or action of the Coast Guard.

4. Collection of Information

This rule will not call for a new collection of information under the Paperwork Reduction Act of 1995 (44 U.S.C. 3501–3520).

5. Federalism

A rule has implications for federalism under Executive Order 13132, Federalism, if it has a substantial direct effect on the States, on the relationship between the national government and the States, or on the distribution of power and responsibilities among the various levels of government. We have analyzed this rule under that Order and determined that this rule does not have implications for federalism.

6. Protest Activities

The Coast Guard respects the First Amendment rights of protesters. Protesters are asked to contact the person listed in the **FOR FURTHER INFORMATION CONTACT** section to coordinate protest activities so that your message can be received without jeopardizing the safety or security of people, places or vessels.

7. Unfunded Mandates Reform Act

The Unfunded Mandates Reform Act of 1995 (2 U.S.C. 1531–1538) requires Federal agencies to assess the effects of their discretionary regulatory actions. In particular, the Act addresses actions that may result in the expenditure by a State, local, or tribal government, in the aggregate, or by the private sector of $100,000,000 (adjusted for inflation) or more in any one year. Though this rule will not result in such an expenditure, we do discuss the effects of this rule elsewhere in this preamble.

8. Taking of Private Property

This rule will not cause a taking of private property or otherwise have taking implications under Executive Order 12630, Governmental Actions and Interference with Constitutionally Protected Property Rights.

9. Civil Justice Reform

This rule meets applicable standards in sections 3(a) and 3(b)(2) of Executive Order 12988, Civil Justice Reform, to minimize litigation, eliminate ambiguity, and reduce burden.

10. Protection of Children

We have analyzed this rule under Executive Order 13045, Protection of Children from Environmental Health Risks and Safety Risks. This rule is not an economically significant rule and does not create an environmental risk to health or risk to safety that may disproportionately affect children.

11. Indian Tribal Governments

This rule does not have tribal implications under Executive Order 13175, Consultation and Coordination with Indian Tribal Governments, because it does not have a substantial direct effect on one or more Indian tribes, on the relationship between the Federal Government and Indian tribes, or on the distribution of power and responsibilities between the Federal Government and Indian tribes.

12. Energy Effects

This action is not a ''significant energy action'' under Executive Order 13211, Actions Concerning Regulations That Significantly Affect Energy Supply, Distribution, or Use.

13. Technical Standards

This rule does not use technical standards. Therefore, we did not consider the use of voluntary consensus standards.

14. Environment

We have analyzed this rule under Department of Homeland Security Management Directive 023–01 and Commandant Instruction M16475.lD, which guide the Coast Guard in complying with the National

Environmental Policy Act of 1969 (NEPA) (42 U.S.C. 4321–4370f), and have determined that this action is one of a category of actions that do not individually or cumulatively have a significant effect on the human environment. This rule involves the amendment of safety zones listed in 33 CFR 165.1332. This rule is categorically excluded from further review under paragraph 34(g) of Figure 2–1 of the Commandant Instruction. An environmental analysis checklist supporting this determination and a Categorical Exclusion Determination are available in the docket where indicated under **ADDRESSES**. We seek any comments or information that may lead to the discovery of a significant environmental impact from this rule.

List of Subjects in 33 CFR Part 165

Harbors, Marine safety, Navigation (water), Reporting and record keeping requirements, Security measures, Waterways.

For the reasons discussed in the preamble, the Coast Guard amends 33 CFR part 165 as follows:

PART 165—REGULATED NAVIGATION AREAS AND LIMITED ACCESS AREAS

■ 1. The authority citation for part 165 continues to read as follows:

Authority: 33 U.S.C. 1231; 46 U.S.C. Chapters 701, 3306, 3707; 50 U.S.C. 191, 195; 33 CFR 1.05–1, 6.04–1, 6.04–6, and 160.5; Pub. L. 107–295, 116 Stat. 2064; Department of Homeland Security Delegation No. 0170.1

■ 2. In § 165.1332, amend the table in paragraph (a)(1) by:

■ a. Revising the entries for ''Tacoma Freedom Fair,'' ''City of Renton Fireworks,'' ''Bainbridge Island Fireworks,'' ''Brewster Fire Department Fireworks,'' and ''Port Townsend Sunrise Rotary;''and

■ b. Adding entries for ''Port Ludlow Fireworks,'' ''Boston Harbor 4th of July,'' and ''Everett 4th of July.''

The revisions and additions read as follows:

§ 165.1332 Safety Zones; Annual Fireworks Displays within the Captain of the Port Puget Sound Zone.

(a) * * *

(1) * * *

Event name (typically)	Event location	Latitude	Longitude
Tacoma Freedom Fair	Commencement Bay	47°17.103′ N	122°28.410′ W
* *	* *	*	* *
City of Renton Fireworks	Renton, Lake Washington	47°30.386′ N	122°12.502′ W
* *	* *	*	* *
Bainbridge Island Fireworks	Eagle Harbor	47°37.142′ N	122°30.397′ W
* *	* *	*	* *
Brewster Fire Department Fireworks.	Brewster	48°05.362′ N	119°47.147′ W
* *	* *	*	* *
Port Townsend Sunrise Rotary	Port Townsend	48°08.413′ N	122°45.531′ W
* *	* *	*	* *
Port Ludlow Fireworks	Port Ludlow	47°55.161′ N	122°41.157′ W
Boston Harbor 4th of July	Boston Harbor	47°08.626′ N	122°54.149′ W
Everett 4th of July	Port Gardner	48°00.672′ N	122°13.391′ W

* * * * *

Dated: April 24, 2013.

S. J. Ferguson,

Captain, U.S. Coast Guard, Captain of the Port, Puget Sound.

[FR Doc. 2013–11750 Filed 5–16–13; 8:45 am]

BILLING CODE 9110–04–P

DEPARTMENT OF HOMELAND SECURITY

Coast Guard

33 CFR Part 165

[Docket No. USCG–2013–0274]

RIN 1625–AA00

Sea World San Diego Fireworks 2013 Season; Mission Bay, San Diego, CA

AGENCY: Coast Guard, DHS.

ACTION: Temporary final rule.

SUMMARY: The Coast Guard is establishing a safety zone on the navigable waters of Mission Bay in support of the Sea World San Diego Fireworks 2013 season. This safety zone is necessary to provide for the safety of the participants, crew, spectators, participating vessels, and other vessels and users of the waterway. Persons and vessels are prohibited from entering into, transiting through, or anchoring within this safety zone unless authorized by the Captain of the Port, or his designated representative.

DATES: This rule is effective from 8:50 p.m. on May 25, 2013, until 10 p.m. on December 31, 2013. This rule will be enforced during the time periods mentioned in the **SUPPLEMENTARY INFORMATION** section below.

ADDRESSES: Documents mentioned in this preamble are part of docket [USCG–2013–0274]. To view documents mentioned in this preamble as being available in the docket, go to *http://www.regulations.gov,* type the docket number in the ''SEARCH'' box and click ''SEARCH.'' Click on Open Docket Folder on the line associated with this rulemaking. You may also visit the Docket Management Facility in Room W12–140 on the ground floor of the Department of Transportation West Building, 1200 New Jersey Avenue SE., Washington, DC 20590, between 9 a.m. and 5 p.m., Monday through Friday, except Federal holidays.

FOR FURTHER INFORMATION CONTACT: If you have questions on this rule, call or email Petty Officer Deborah Metzger, Waterways Management, U.S. Coast Guard Sector San Diego, Coast Guard; telephone 619–278–7656, email *d11-pf-marineeventssandiego@uscg.mil.* If you have questions on viewing or submitting material to the docket, call Barbara Hairston, Program Manager, Docket Operations, telephone (202) 366–9826.

SUPPLEMENTARY INFORMATION:

Table of Acronyms

DHS Department of Homeland Security
FR Federal Register
NPRM Notice of Proposed Rulemaking

A. Regulatory History and Information

The Coast Guard is issuing this final rule without prior notice and opportunity to comment pursuant to authority under section 4(a) of the Administrative Procedure Act (APA) (5 U.S.C. 553(b)). This provision authorizes an agency to issue a rule without prior notice and opportunity to comment when the agency for good cause finds that those procedures are ''impracticable, unnecessary, or contrary to the public interest.'' Under 5 U.S.C. 553(b)(B), the Coast Guard finds that good cause exists for not publishing a notice of proposed rulemaking (NPRM) with respect to this rule because publishing an NPRM would be impracticable. The Coast Guard did not receive necessary information from the event sponsor in time to publish a notice of proposed rulemaking. The event is scheduled to take place, and as such, immediate action is necessary to ensure the safety of vessels, spectators, participants, and others in the vicinity of the marine event on the dates and times this rule will be in effect.

Under 5 U.S.C. 553(d)(3), for the same reasons mentioned above, the Coast Guard finds that good cause exists for making this rule effective less than 30 days after publication in the **Federal Register.** Delaying the effective date would be contrary to the public interest, since immediate action is needed to ensure the public's safety.

B. Basis and Purpose

The legal basis for this temporary rule is the Ports and Waterways Safety Act which authorizes the Coast Guard to establish safety zones (33 U.S.C 1221 et seq.).

Sea World is sponsoring the Sea World Fireworks, which will include a fireworks presentation from a barge in Mission Bay. This safety zone is necessary to provide for the safety of the crew, spectators, participants, and other vessels and users of the waterway.

C. Discussion of the Final Rule

The Coast Guard is establishing a safety zone that will be effective from 8:50 p.m. on May 25, 2013, to 10 p.m. on December 31, 2013. This rule will be enforced from 8:50 p.m. to 10 p.m. on the following evenings: May 25 through May 27, June 1, 2, 8, 9, and 13 through 30, July 1 through 31, August 1 through 18, August 23 through 25, August 31, and September 1 through 2, November 15, and December 31, 2013.

The safety zone will cover all navigable waters within 600 feet of the fireworks barge, located in approximate position 32°46′03″ N, 117°13′11″ W. The safety zone is necessary to provide for the safety of the crew, spectators, participants, and other vessels and users of the waterway. When this safety zone is being enforced, persons and vessels are prohibited from entering into, transiting through, or anchoring within this safety zone unless authorized by the Captain of the Port, or his designated representative.

D. Regulatory Analyses

We developed this rule after considering numerous statutes and executive orders related to rulemaking. Below we summarize our analyses based on these statutes and executive orders.

1. Regulatory Planning and Review

This rule is not a significant regulatory action under section 3(f) of Executive Order 12866, Regulatory Planning and Review, as supplemented by Executive Order 13563, Improving Regulation and Regulatory Review, and does not require an assessment of potential costs and benefits under section 6(a)(3) of Executive Order 12866 or under section 1 of Executive Order 13563. The Office of Management and Budget has not reviewed it under those Orders. This determination is based on the size, location and timing of the safety zone. The safety zone will be enforced for a relatively short time, 70 minutes, late at night when vessel traffic is low. It impacts a very small area of Mission Bay, a circle about 1,200 feet in diameter. Commercial vessels will not be hindered by the safety zone. Recreational vessels can transit around the safety zone.

2. Impact on Small Entities

The Regulatory Flexibility Act of 1980 (RFA), 5 U.S.C. 601–612, as amended, requires federal agencies to consider the potential impact of regulations on small entities during rulemaking. The term ''small entities'' comprises small businesses, not-for-profit organizations that are independently owned and operated and are not dominant in their fields, and governmental jurisdictions with populations of less than 50,000. The Coast Guard certifies under 5 U.S.C. 605(b) that this rule will not have a significant economic impact on a substantial number of small entities.

This rule will affect the following entities, some of which may be small entities: the owners or operators of vessels intending to transit or anchor in a portion of Mission Bay between 8:50 p.m. on May 25, 2013, and 10 p.m. on December 31, 2013. This rule will be enforced from 8:50 p.m. to 10 p.m. on the following evenings; May 25 through May 27, June 1, 2, 8, 9, and 13 through 30, July 1 through 31, August 1 through 18, August 23 through 25, August 31, and September 1 through 2, November 15, and December 31, 2013.

This safety zone will not have a significant economic impact on a substantial number of small entities for the following reasons: The safety zone will only be in effect for one hour and 10 minutes late in the evening when vessel traffic is low. It impacts a very small area of Mission Bay, a circle about 1,200 feet in diameter. Vessel traffic can transit safely around the safety zone.

3. Assistance for Small Entities

Under section 213(a) of the Small Business Regulatory Enforcement Fairness Act of 1996 (Pub. L. 104–121), we want to assist small entities in understanding this rule. If the rule would affect your small business, organization, or governmental jurisdiction and you have questions concerning its provisions or options for compliance, please contact the person listed in the **FOR FURTHER INFORMATION CONTACT**, above.

Small businesses may send comments on the actions of Federal employees who enforce, or otherwise determine compliance with, Federal regulations to the Small Business and Agriculture Regulatory Enforcement Ombudsman and the Regional Small Business Regulatory Fairness Boards. The Ombudsman evaluates these actions annually and rates each agency's responsiveness to small business. If you wish to comment on actions by employees of the Coast Guard, call 1–888–REG–FAIR (1–888–734–3247). The Coast Guard will not retaliate against small entities that question or complain about this rule or any policy or action of the Coast Guard.

4. Collection of Information

This rule will not call for a new collection of information under the Paperwork Reduction Act of 1995 (44 U.S.C. 3501–3520).

5. Federalism

A rule has implications for federalism under Executive Order 13132, Federalism, if it has a substantial direct effect on the States, on the relationship between the national government and the States, or on the distribution of power and responsibilities among the various levels of government. We have analyzed this rule under that Order and

determined that this rule does not have implications for federalism.

6. Protest Activities

The Coast Guard respects the First Amendment rights of protesters. Protesters are asked to contact the person listed in the **FOR FURTHER INFORMATION CONTACT** section to coordinate protest activities so that your message can be received without jeopardizing the safety or security of people, places or vessels.

7. Unfunded Mandates Reform Act

The Unfunded Mandates Reform Act of 1995 (2 U.S.C. 1531–1538) requires Federal agencies to assess the effects of their discretionary regulatory actions. In particular, the Act addresses actions that may result in the expenditure by a State, local, or tribal government, in the aggregate, or by the private sector of $100,000,000 (adjusted for inflation) or more in any one year. Though this rule will not result in such expenditure, we do discuss the effects of this rule elsewhere in this preamble.

8. Taking of Private Property

This rule will not cause a taking of private property or otherwise have taking implications under Executive Order 12630, Governmental Actions and Interference with Constitutionally Protected Property Rights.

9. Civil Justice Reform

This rule meets applicable standards in sections 3(a) and 3(b)(2) of Executive Order 12988, Civil Justice Reform, to minimize litigation, eliminate ambiguity, and reduce burden.

10. Protection of Children

We have analyzed this rule under Executive Order 13045, Protection of Children from Environmental Health Risks and Safety Risks. This rule is not an economically significant rule and does not create an environmental risk to health or risk to safety that may disproportionately affect children.

11. Indian Tribal Governments

This rule does not have tribal implications under Executive Order 13175, Consultation and Coordination with Indian Tribal Governments, because it does not have a substantial direct effect on one or more Indian tribes, on the relationship between the Federal Government and Indian tribes, or on the distribution of power and responsibilities between the Federal Government and Indian tribes.

12. Energy Effects

This action is not a ''significant energy action'' under Executive Order 13211, Actions Concerning Regulations That Significantly Affect Energy Supply, Distribution, or Use.

13. Technical Standards

This rule does not use technical standards. Therefore, we did not consider the use of voluntary consensus standards.

14. Environment

We have analyzed this rule under Department of Homeland Security Management Directive 023–01 and Commandant Instruction M16475.lD, which guide the Coast Guard in complying with the National Environmental Policy Act of 1969 (NEPA) (42 U.S.C. 4321–4370f), and have determined that this action is one of a category of actions that do not individually or cumulatively have a significant effect on the human environment. This rule involves establishment of a temporary safety zone. This rule is categorically excluded from further review under paragraph 34(g) of Figure 2–1 of the Commandant Instruction. An environmental analysis checklist supporting this determination and a Categorical Exclusion Determination are available in the docket where indicated under **ADDRESSES**.

List of Subjects in 33 CFR Part 165

Harbors, Marine safety, Navigation (water), Reporting and recordkeeping requirements, Security Measures, Waterways.

For the reasons discussed in the preamble, the Coast Guard amends 33 CFR part 165 as follows:

PART 165—REGULATED NAVIGATION AREAS AND LIMITED ACCESS AREAS

■ 1. The authority citation for part 165 continues to read as follows:

Authority: 33 U.S.C. 1226, 1231; 46 U.S.C. Chapter 701, 3306, 3703; 50 U.S.C. 191, 195; 33 CFR 1.05–1, 6.04–1, 6.04–6, and 160.5; Pub. L. 107–295, 116 Stat. 2064; Department of Homeland Security Delegation No. 0170.1.

■ 2. Add § 165.T11–560 to read as follows:

§ 165.T11–560 Safety Zone; Sea World San Diego Fireworks 2013 Season, Mission Bay; San Diego, CA.

(a) *Location.* The safety zone will include the area within 600 feet of the fireworks barge in approximate position 32°46′03″ N, 117°13′11″ W.

(b) *Enforcement period.* This rule will be enforced from 8:50 p.m. on May 25, 2013 to 10 p.m. on December 31, 2013. This rule will be enforced from 8:50 p.m. to 10 p.m. on the following evenings; May 25 through May 27, June 1, 2, 8, 9, and 13 through 30, July 1 through 31, August 1 through 18, August 23 through 25, August 31, and September 1 through 2, November 15, and December 31, 2013.

(c) *Definitions.* The following definition applies to this section: *designated representative* means any commissioned, warrant, or petty officer of the Coast Guard on board Coast Guard, Coast Guard Auxiliary, local, state, or federal law enforcement vessels who have been authorized to act on the behalf of the Captain of the Port.

(d) *Regulations.* (1) In accordance with general regulations in 33 CFR part 165, Subpart C, entry into, transit through or anchoring within this safety zone is prohibited unless authorized by the Captain of the Port of San Diego or his designated representative.

(2) Mariners requesting permission to transit through the safety zone may request authorization to do so from the Sector San Diego Command Center. The Command Center may be contacted on VHF–FM Channel 16.

(3) All persons and vessels shall comply with the instructions of the Coast Guard Captain of the Port or his designated representative.

(4) Upon being hailed by U.S. Coast Guard patrol personnel by siren, radio, flashing light, or other means, the operator of a vessel shall proceed as directed.

(5) The Coast Guard may be assisted by other federal, state, or local agencies.

Dated: April 30, 2013.

S. M. Mahoney,

Captain, United States Coast Guard, Captain of the Port San Diego.

[FR Doc. 2013–11828 Filed 5–16–13; 8:45 am]

BILLING CODE 9110–04–P

ENVIRONMENTAL PROTECTION AGENCY

40 CFR Part 52

[EPA–R04–OAR–2013–0044 (a); FRL–9814–5]

Approval and Promulgation of Implementation Plans; Tennessee; Transportation Conformity Revisions

AGENCY: Environmental Protection Agency.

ACTION: Direct final rule.

SUMMARY: EPA is taking direct final action to approve a State Implementation Plan (SIP) revision submitted by the State of Tennessee, through the Tennessee Department of Environment and Conservation (TDEC),

Bureau of Environment, Air Pollution Control Division (APCD), on July 12, 2012. This revision consists of updates to transportation conformity criteria and procedures related to interagency consultation and enforceability of certain transportation-related control measures and mitigation measures. The intended effect is to update the transportation conformity criteria and procedures in the Tennessee SIP. This action is being taken pursuant to section 110 of the Clean Air Act (CAA or Act).

DATES: This direct final rule is effective July 16, 2013 without further notice, unless EPA receives adverse comment by June 17, 2013. If EPA receives such comments, it will publish a timely withdrawal of the direct final rule in the **Federal Register** and inform the public that the rule will not take effect.

ADDRESSES: Submit your comments, identified by Docket ID No. EPA–R04–OAR–2013–0044 by one of the following methods:

1. *www.regulations.gov:* Follow the on-line instructions for submitting comments.
2. *Email: R4–RDS@epa.gov.*
3. *Fax:* (404) 562–9019.
4. *Mail:* ''EPA–R04–OAR–2013–0044,'' Air Quality Modeling and Transportation Section, Air Planning Branch, Air, Pesticides and Toxics Management Division, U.S. Environmental Protection Agency, Region 4, 61 Forsyth Street SW., Atlanta, Georgia 30303–8960.
5. *Hand Delivery or Courier:* Amanetta Somerville or Kelly Sheckler, Air Quality Modeling and Transportation Section, Air Planning Branch, Air, Pesticides and Toxics Management Division, U.S. Environmental Protection Agency, Region 4, 61 Forsyth Street SW., Atlanta, Georgia 30303–8960. Such deliveries are only accepted during the Regional Office's normal hours of operation. The Regional Office's official hours of business are Monday through Friday, 8:30 to 4:30, excluding federal holidays.

Instructions: Direct your comments to Docket ID No. ''EPA–R04–OAR–2013–0044.'' EPA's policy is that all comments received will be included in the public docket without change and may be made available online at *www.regulations.gov,* including any personal information provided, unless the comment includes information claimed to be Confidential Business Information (CBI) or other information whose disclosure is restricted by statute. Do not submit through *www.regulations.gov* or email, information that you consider to be CBI or otherwise protected. The *www.regulations.gov* Web site is an ''anonymous access'' system, which means EPA will not know your identity or contact information unless you provide it in the body of your comment. If you send an email comment directly to EPA without going through *www.regulations.gov,* your email address will be automatically captured and included as part of the comment that is placed in the public docket and made available on the Internet. If you submit an electronic comment, EPA recommends that you include your name and other contact information in the body of your comment and with any disk or CD–ROM you submit. If EPA cannot read your comment due to technical difficulties and cannot contact you for clarification, EPA may not be able to consider your comment. Electronic files should avoid the use of special characters, any form of encryption, and be free of any defects or viruses. For additional information about EPA's public docket visit the EPA Docket Center homepage at *http://www.epa.gov/epahome/dockets.htm.*

Docket: All documents in the electronic docket are listed in the *www.regulations.gov* index. Although listed in the index, some information is not publicly available, i.e., CBI or other information whose disclosure is restricted by statute. Certain other material, such as copyrighted material, is not placed on the Internet and will be publicly available only in hard copy form. Publicly available docket materials are available either electronically in *www.regulations.gov* or in hard copy at the Air Quality Modeling and Transportation Section, Air Planning Branch, Air, Pesticides and Toxics Management Division, U.S. Environmental Protection Agency, Region 4, 61 Forsyth Street SW., Atlanta, Georgia 30303–8960. EPA requests that if at all possible, you contact the person listed in the **FOR FURTHER INFORMATION CONTACT** section to schedule your inspection. The Regional Office's official hours of business are Monday through Friday, 8:30 to 4:30, excluding federal holidays.

FOR FURTHER INFORMATION CONTACT: Amanetta Somerville or Kelly Sheckler, Air Quality Modeling and Transportation Section, Air Planning Branch, Air, Pesticides and Toxics Management Division, U.S. Environmental Protection Agency, Region 4, 61 Forsyth Street SW., Atlanta, Georgia 30303–8960. Ms. Somerville's telephone number is 404–562–9025. She can also be reached via electronic mail at *somerville.amanetta@epa.gov.* Ms. Sheckler's telephone number is 404–562–9222. She can also be reached via electronic mail at *sheckler.kelly@epa.gov. mailto:*

SUPPLEMENTARY INFORMATION:

Table of Contents

I. Transportation Conformity
II. Background for this Action
A. Federal Requirements
B. Tennessee State Rule
C. Chattanooga Conformity SIP
D. Clarksville-Hopkinsville Conformity SIP
E. Knoxville Conformity SIP
F. Memphis Conformity SIP
III. State Submittal and EPA Evaluation
IV. Final Action
V. Statutory and Executive Order Reviews

I. Transportation Conformity

Transportation conformity (hereafter referred to as ''conformity'') is required under section 176(c) of the CAA to ensure that federally supported highway projects, transit projects, and other activities are consistent with (conform to) the purpose of the SIP. Conformity currently applies to areas that are designated nonattainment, and to areas that have been redesignated to attainment after 1990 (maintenance areas) with plans developed under section 175A of the Act, for the following transportation related criteria pollutants: Ozone, particulate matter (e.g., $PM_{2.5}$ and PM_{10}), carbon monoxide, and nitrogen dioxide.

Conformity to the purpose of the SIP means that transportation activities will not cause new air quality violations, worsen existing violations, or delay timely attainment of the relevant national ambient air quality standards (NAAQS) for criteria pollutants. The transportation conformity regulation is found in 40 CFR part 93 and provisions related to conformity SIPs are found in 40 CFR 51.390.

II. Background for This Action

A. Federal Requirements

EPA promulgated the federal transportation conformity criteria and procedures (''Conformity Rule'') on November 24, 1993 (58 FR 62188). Among other things, the rule required states to address all provisions of the conformity rule in their SIPs, frequently referred to as ''conformity SIPs.'' Under 40 CFR 51.390, most sections of the conformity rule were required to be copied verbatim. States were also required to tailor all or portions of the following three sections of the conformity rule to meet their state's individual circumstances: 40 CFR 93.105, which addresses consultation procedures; 40 CFR 93.122(a)(4)(ii), which addresses written commitments

to control measures that are not included in a metropolitan planning organization's (MPO's) transportation plan and transportation improvement program that must be obtained prior to a conformity determination, and the requirement that such commitments, when they exist, must be fulfilled; and 40 CFR 93.125(c), which addresses written commitments to mitigation measures that must be obtained prior to a project-level conformity determination, and the requirement that project sponsors must comply with such commitments, when they exist.

On August 10, 2005, the ''Safe, Accountable, Flexible, Efficient Transportation Equity Act: A Legacy for Users'' (SAFETEA–LU) was signed into law (Public Law 109–59). SAFETEA–LU revised section 176(c) of the CAA transportation conformity provisions. One of the changes streamlines the requirements for conformity SIPs. Under SAFETEA–LU, states are required to address and tailor only three sections of the rule in their conformity SIPs: 40 CFR 93.105, 40 CFR 93.122(a)(4)(ii), and, 40 CFR 93.125(c), described above. In general, states are no longer required to submit conformity SIP revisions that address the other sections of the conformity rule. These changes took effect on August 10, 2005, when SAFETEA–LU was signed into law.

B. Tennessee State Rule

Previously, Tennessee established a transportation conformity SIP for the entire state. Specifically, on May 16, 2003, EPA approved a SIP revision for the State of Tennessee which incorporated by reference 40 CFR part 93 Subpart A, and customized 40 CFR 93.105, 93.122 (a)(4)(ii), and 93.125(c) for all of the MPOs in the entire state (68 FR 26492). The conformity SIP revision (the subject of this rulemaking) removes any incorporation by reference and revises the procedures for consultation, conflict resolution and public participation to be consistent with the SAFETEA–LU revisions to the CAA and subsequent regulations published on January 24, 2008 (73 FR 4420).

C. Chattanooga Conformity SIP

Effective April 5, 2005, EPA designated Hamilton County in Tennessee, Walker and Catoosa Counties in Georgia, and a portion of Jackson County, Alabama in the tri-state Chattanooga, Tennessee-Georgia area (hereafter referred to as the ''Chattanooga Area''), as nonattainment for the 1997 annual $PM_{2.5}$ NAAQS. *See* 70 FR 944. The current designation status of the Chattanooga 1997 annual $PM_{2.5}$ area is nonattainment.

The States of Georgia and Alabama have established transportation conformity procedures for the counties that make up the Georgia and Alabama portion of the Chattanooga Area in their individual conformity SIPs. Tennessee's July 2012 SIP revision includes the transportation conformity consultation, conflict resolution and public participation procedures for Hamilton County as part of the 1997 annual $PM_{2.5}$ Chattanooga Area.

D. Clarksville-Hopkinsville Conformity SIP

Effective June 15, 2004, EPA designated Christian County, Kentucky and Montgomery County, Tennessee in the bi-state Clarksville-Hopkinsville, Tennessee-Kentucky area (hereafter referred to as the ''Clarksville-Hopkinsville Area''), as nonattainment for the 1997 8-hour ozone NAAQS. *See* 69 FR 23857. The current designation status for the Clarksville-Hopkinsville Area is attainment and this area has an approved maintenance plan.

The Commonwealth of Kentucky has established conformity procedures for Christian County that makes up the Kentucky portion of the Clarksville-Hopkinsville Area in its individual conformity SIP. Tennessee's July 2012 SIP revision updates the transportation conformity consultation, conflict resolution and public participation procedures for Montgomery County, Tennessee as part of the Clarksville-Hopkinsville Area.

E. Knoxville Conformity SIP

Effective June 15, 2004, EPA designated 6 whole counties and a portion of one county in the Knoxville, Tennessee area (hereafter referred to as the Knoxville Area), as nonattainment for the 1997 8-hour ozone NAAQS. *See* 69 FR 23857. The counties include Anderson, Blount, Jefferson, Knox, Loudon and Sevier counties and a portion of Cocke County. The current designation status of the Knoxville 1997 8-hour ozone area is attainment, with an approved maintenance plan. Effective April 5, 2005, EPA designated 4 whole counties and a portion of one county in the Knoxville Area as nonattainment for the 1997 annual $PM_{2.5}$ NAAQS. The counties include Anderson, Blount, Knox, Loudon counties and a portion of Roane County. *See* 70 FR 944. On November 13, 2009, EPA designated 4 whole counties and a portion of one county in the Knoxville Area as nonattainment for the 2006 24-hour $PM_{2.5}$ NAAQS. The counties include Anderson, Blount, Knox, Loudon counties and a portion of Roane County. *See* 74 FR 58688. Effective July 20, 2012, EPA designated 1 whole county (i.e., Knox County) and two partial counties (i.e., Blount and Anderson counties) in the Knoxville Area as nonattainment for the 2008 8-hour ozone NAAQS. *See* 77 FR 30088. The current designation status of the Knoxville Area for 1997 annual $PM_{2.5}$, 2006 24-hour $PM_{2.5}$, and the 2008 8-hour ozone NAAQS is nonattainment.

The Lakeway Area Metropolitan Transportation Planning Organization (LAMTPO) [1] and the Knoxville Regional Transportation Planning Organization (KRTPO) [2] are within the same maintenance area for the 1997 8-hour ozone NAAQS. KRTPO is the MPO for most of the Knoxville 2008 8-hour ozone area and is the MPO for most of the Knoxville 1997 $PM_{2.5}$ area. For the purposes of implementing transportation conformity for the 1997 annual $PM_{2.5}$, 1997 8-hour ozone and 2008 8-hour ozone NAAQS, KRTPO served as the lead agency for the preparation, consultation, and distribution of the conformity determinations. Tennessee's July 2012, SIP revision updates the transportation conformity consultation, conflict resolution and public participation procedures for the applicable Knoxville areas in relation to the 1997 annual $PM_{2.5}$, 1997 8-hour ozone and 2008 8-hour ozone NAAQS.

F. Memphis Conformity SIP

Effective January 6, 1992, EPA designated Shelby County in the Memphis, Tennessee area as nonattainment for the carbon monoxide NAAQS. *See* 56 FR 56694. The current designation status of the area is attainment with an approved maintenance plan for the carbon monoxide NAAQS. Effective June 15, 2004, EPA designated Shelby County in Tennessee, and Crittenden County in Arkansas as nonattainment for the 1997 8-hour ozone NAAQS. *See* 69 FR 23857. This entire area is known as the bi-state Memphis, Tennessee 1997 8-hour ozone area (hereafter referred to as the bi-state Memphis Area). The current designation status for the bi-state Memphis Area for the 1997 8-hour ozone NAAQS is attainment with an approved maintenance plan. Effective July 20, 2012, EPA designated 2 whole counties (i.e., Shelby County, Tennessee, and Crittenden County, Arkansas) and one partial county (i.e., DeSoto County, Mississippi) in the Memphis Area as

[1] LAMTPO is the MPO for Jefferson County.

[2] KRTPO's planning boundary includes Knox County, and the urbanized areas of Blount, Loudon, and Sevier counties.

nonattainment for the 2008 8-hour ozone NAAQS. *See* 77 FR 30088.

The Memphis MPO's planning boundary includes Shelby County, Tennessee and a portion of DeSoto County, Mississippi. For the purposes of transportation conformity requirements related to the carbon monoxide, 1997 8-hour ozone and 2008 8-hour ozone NAAQS, the Memphis MPO serves as the lead agency for the preparation, consultation, and distribution of the conformity determinations for the Tennessee and Mississippi portions of this Area.

The State of Arkansas has established conformity procedures for Crittenden County which makes up the Arkansas portion of the bi-state Memphis Area in its individual conformity SIP. Mississippi is establishing transportation conformity procedures for the portion of Desoto County that is included in the Memphis nonattainment area for the 2008 8-hour ozone NAAQS. Tennessee's July 2012 SIP revision updates the transportation conformity consultation, conflict resolution and public participation procedures for Shelby County, Tennessee as part of the Memphis Area.

III. State Submittal and EPA Evaluation

On July 12, 2012, the State of Tennessee, through TDEC, submitted updates to the State's transportation conformity and consultation rule to EPA as a revision to the SIP. This SIP revision deleted the incorporation by reference to 40 CFR 93 Subpart A, established procedures for interagency consultation, conflict resolution and public participation, and included provisions for control and mitigation measures. This revised conformity SIP replaces the August 31, 2001, rule amendment that was approved by EPA on May 16, 2003 (68 FR 26492).

The State of Tennessee developed its consultation rule based on the elements contained in 40 CFR 93.105. As a first step, the State worked with the existing transportation planning organization's interagency committee that included representatives from the State air quality agency, State Department of Transportation (DOT), United States DOT (i.e., the Federal Highway Administration—Tennessee Division, and Federal Transit Administration), the MPOs of the maintenance and nonattainment areas of Tennessee, and EPA. The interagency committee met regularly and drafted the consultation rules considering elements in 40 CFR 93.105, and integrated the local procedures and processes into the rule. The consultation process developed in this rule is for the areas of Tennessee described above. In addition, the conformity SIP includes the provision for written commitment for control measures and mitigation measures based on 40 CFR 93.122(a)(4)(ii) and 93.125(c), respectively. On October 20, 2009, APCD held a public hearing for the transportation conformity rulemaking.

EPA has evaluated this SIP and has determined that Tennessee has met the requirements of federal transportation conformity rule as described in 40 CFR Part 51, Subpart T and 40 CFR Part 93, Subpart A. APCD has satisfied the public participation and comprehensive interagency consultation requirement during development and adoption of the State Rule at the local level. Therefore, EPA is approving the rule as a revision to the Tennessee SIP. EPA's rule requires the states to develop their own processes and procedures for interagency consultation among the federal, state, and local agencies and resolution of conflicts meeting the criteria in 40 CFR 93.105. The SIP revision must include processes and procedures to be followed by the MPO, state DOT, and U.S. DOT in consulting with the state and local air quality agencies and EPA before making conformity determinations. The transportation conformity SIP revision must also include processes and procedures for the state and local air quality agencies and EPA to coordinate the development of applicable SIPs with MPOs, state DOTs, and U.S. DOT.

EPA has reviewed the submittal to assure consistency with the CAA as amended by SAFETEA–LU and EPA regulations (40 CFR Part 93 and 40 CFR 51.390) governing state procedures for transportation conformity and interagency consultation and has concluded that the submittal is approvable. Details of EPA's review are set forth in a technical support document (TSD), which has been included in the docket for this action. Specifically, in the TSD, EPA identifies how the submitted procedures satisfy our requirements under 40 CFR 93.105 for interagency consultation with respect to the development of transportation plans and programs, SIPs, and conformity determinations, the resolution of conflicts, and the provision of adequate public consultation, and the requirements under 40 CFR 93.122(a)(4)(ii) and 93.125(c) for enforceability of control measures and mitigation measures.

IV. Final Action

For the reasons set forth above, EPA is taking action under section 110 of the Act to approve the rule implementing the conformity criteria and consultation procedures revision to the Tennessee SIP pursuant to the CAA, as a revision to the Tennessee SIP. As a result of this action, Tennessee's previously SIP-approved conformity procedures for Tennessee (68 FR 26492, May 16, 2003), will be replaced by the procedures submitted to EPA on July 12, 2012, for approval and adopted by State of Tennessee on January 18, 2012. This action also establishes consultation procedures for all counties in Tennessee.

EPA is publishing this rule without prior proposal because the Agency views this as a noncontroversial submittal and anticipates no adverse comments. However, in the proposed rules section of this **Federal Register** publication, EPA is publishing a separate document that will serve as the proposal to approve the SIP revision should adverse comments be filed. This rule will be effective July 16, 2013 without further notice unless the Agency receives adverse comments by June 17, 2013.

If EPA receives such comments, then EPA will publish a document withdrawing the final rule and informing the public that the rule will not take effect. All public comments received will then be addressed in a subsequent final rule based on the proposed rule. EPA will not institute a second comment period. Parties interested in commenting should do so at this time. If no such comments are received, the public is advised that this rule will be effective on July 16, 2013 and no further action will be taken on the proposed rule. Please note that if EPA receives adverse comment on an amendment, paragraph, or section of this rule and if that provision may be severed from the remainder of the rule, EPA may adopt as final those provisions of the rule that are not the subject of an adverse comment.

V. Statutory and Executive Order Reviews

Under the CAA, the Administrator is required to approve a SIP submission that complies with the provisions of the Act and applicable Federal regulations. 42 U.S.C. 7410(k); 40 CFR 52.02(a). Thus, in reviewing SIP submissions, EPA's role is to approve state choices, provided that they meet the criteria of the CAA. Accordingly, this action merely approves state law as meeting federal requirements and does not impose additional requirements beyond those imposed by state law. For that reason, this action:

- Is not a ''significant regulatory action'' subject to review by the Office

of Management and Budget under Executive Order 12866 (58 FR 51735, October 4, 1993);

• does not impose an information collection burden under the provisions of the Paperwork Reduction Act (44 U.S.C. 3501 *et seq.*);

• is certified as not having a significant economic impact on a substantial number of small entities under the Regulatory Flexibility Act (5 U.S.C. 601 *et seq.*);

• does not contain any unfunded mandate or significantly or uniquely affect small governments, as described in the Unfunded Mandates Reform Act of 1995 (Pub. L. 104–4);

• does not have Federalism implications as specified in Executive Order 13132 (64 FR 43255, August 10, 1999);

• is not an economically significant regulatory action based on health or safety risks subject to Executive Order 13045 (62 FR 19885, April 23, 1997);

• is not a significant regulatory action subject to Executive Order 13211 (66 FR 28355, May 22, 2001);

• is not subject to requirements of Section 12(d) of the National Technology Transfer and Advancement Act of 1995 (15 U.S.C. 272 note) because application of those requirements would be inconsistent with the CAA; and

• does not provide EPA with the discretionary authority to address, as appropriate, disproportionate human health or environmental effects, using practicable and legally permissible methods, under Executive Order 12898 (59 FR 7629, February 16, 1994).

In addition, this rule does not have tribal implications as specified by Executive Order 13175 (65 FR 67249, November 9, 2000), because the SIP is not approved to apply in Indian country located in the state, and EPA notes that it will not impose substantial direct costs on tribal governments or preempt tribal law.

The Congressional Review Act, 5 U.S.C. 801 *et seq.,* as added by the Small Business Regulatory Enforcement Fairness Act of 1996, generally provides that before a rule may take effect, the agency promulgating the rule must submit a rule report, which includes a copy of the rule, to each House of the Congress and to the Comptroller General of the United States. EPA will submit a report containing this action and other required information to the U.S. Senate, the U.S. House of Representatives, and the Comptroller General of the United States prior to publication of the rule in the **Federal Register**. A major rule cannot take effect until 60 days after it is published in the **Federal Register**. This action is not a ''major rule'' as defined by 5 U.S.C. 804(2).

Under section 307(b)(1) of the CAA, petitions for judicial review of this action must be filed in the United States Court of Appeals for the appropriate circuit by July 16, 2013. Filing a petition for reconsideration by the Administrator of this final rule does not affect the finality of this action for the purposes of judicial review nor does it extend the time within which a petition for judicial review may be filed, and shall not postpone the effectiveness of such rule or action. Parties with objections to this direct final rule are encouraged to file a comment in response to the parallel notice of proposed rulemaking for this action published in the proposed rules section of today's **Federal Register**, rather than file an immediate petition for judicial review of this direct final rule, so that EPA can withdraw this direct final rule and address the comment in the proposed rulemaking. This action may not be challenged later in proceedings to enforce its requirements. *See* section 307(b)(2).

List of Subjects in 40 CFR Part 52

Environmental protection, Air pollution control, Carbon monoxide, Incorporation by reference, Intergovernmental relations, Nitrogen dioxide, Ozone, Particular Matter, Reporting and recordkeeping requirements, Volatile organic compounds.

Dated: May 8, 2013.

A. Stanley Meiburg,

Acting Regional Administrator, Region 4.

40 CFR part 52 is amended as follows:

PART 52—[AMENDED]

■ 1. The authority citation for part 52 continues to read as follows:

Authority: 42.U.S.C. 7401 *et seq.*

Subpart (RR)—(Tennessee)

■ 2. In § 52.2220, table 1 in paragraph (c) is amended by revising entry for ''1200–3–34.01'' to read as follows:

§ 52.2220 Identification of plan.

* * * * *

(c) * * *

TABLE 1—EPA APPROVED TENNESSEE REGULATIONS

State citation	Title/subject	State effective date	EPA approval date	Explanation
* *	*	*	*	* *
Section 1200–3–34–.01	Transportation Conformity Interagency Consultation and General Provisions.	4/17/2012	5/17/2013 [Insert citation of publication].	
* *	*	*	*	* *

* * * * *

[FR Doc. 2013–11677 Filed 5–16–13; 8:45 am]

BILLING CODE 6560–50–P

ENVIRONMENTAL PROTECTION AGENCY

40 CFR Part 52

[EPA–R04–OAR–2012–0888; FRL–9814–3]

Approval and Promulgation of Implementation Plans Tennessee: Revisions to Volatile Organic Compound Definition

AGENCY: Environmental Protection Agency (EPA).

ACTION: Final rule.

SUMMARY: EPA is taking final action to approve changes to the Tennessee State Implementation Plan (SIP), submitted by the State of Tennessee, through the Tennessee Department of Environment and Conservation (TDEC) on September 3, 1999. Tennessee's September 3, 1999, SIP adds 17 compounds to the list of compounds excluded from the definition of ''Volatile Organic Compound'' (VOC). EPA is approving this SIP revision because the State has demonstrated that it is consistent with the Clean Air Act (CAA or Act).

DATES: This rule is effective June 17, 2013.

ADDRESSES: EPA has established a docket for this action under Docket Identification No. EPA–R04–OAR–2012–0888. All documents in the docket are listed on the *www.regulations.gov* Web site. Although listed in the index, some information is not publicly available, i.e., Confidential Business Information or other information whose disclosure is restricted by statute. Certain other material, such as copyrighted material, is not placed on the Internet and will be publicly available only in hard copy form. Publicly available docket materials are available either electronically through *www.regulations.gov* or in hard copy at the Regulatory Development Section, Air Planning Branch, Air, Pesticides and Toxics Management Division, U.S. Environmental Protection Agency, Region 4, 61 Forsyth Street SW., Atlanta, Georgia 30303–8960. EPA requests that if at all possible, you contact the person listed in the **FOR FURTHER INFORMATION CONTACT** section to schedule your inspection. The Regional Office's official hours of business are Monday through Friday, 8:30 to 4:30 excluding federal holidays.

FOR FURTHER INFORMATION CONTACT: Sean Lakeman, Regulatory Development Section, Air Planning Branch, Air, Pesticides and Toxics Management Division, U.S. Environmental Protection Agency, Region 4, 61 Forsyth Street SW., Atlanta, Georgia 30303–8960. The telephone number is (404) 562–9043. Mr. Lakeman can be reached via electronic mail at *lakeman.sean@epa.gov*.

SUPPLEMENTARY INFORMATION:

Table of Contents

I. Analysis of the State's Submittal
II. Response to Comments
III. Final Action
III. Statutory and Executive Order Reviews

I. Analysis of the State's Submittal

Tennessee's September 3, 1999, SIP submission changes rule 1200–3–9-.01 by adding a total of 17 compounds to the list of compounds excluded from the definition of VOC to be consistent with EPA's definition of VOC at 40 CFR 51.100(s). The SIP submittal is in response to EPA's revision to the definition of VOC, (at 40 CFR 51.100(s)) published in the **Federal Register** on August 25, 1997 (62 FR 44900) and April 9, 1998 (63 FR 17331) adding the 16 compounds listed below in Table—1 and the compound methyl acetate, respectively. These compounds were added to the exclusion list for VOC on the basis that they have a negligible effect on tropospheric ozone formation. The compounds were added by EPA through a rulemaking action which provided for public notice and comment. Today's action approves a SIP revision to update the Tennessee SIP to be consistent with federal law.

Tropospheric ozone, commonly known as smog, occurs when VOC and nitrogen oxide (NO_X) react in the atmosphere. Because of the harmful health effects of ozone, EPA limits the amount of VOC and NO_X that can be released into the atmosphere. VOC are those compounds of carbon (excluding carbon monoxide, carbon dioxide, carbonic acid, metallic carbides, or carbonates, and ammonium carbonate) which form ozone through atmospheric photochemical reactions. Compounds of carbon (or organic compounds) have different levels of reactivity; they do not react at the same speed, or do not form ozone to the same extent. It has been EPA's policy that compounds of carbon with a negligible level of reactivity need not be regulated to reduce ozone (42 FR 35314, July 8, 1977). EPA determines whether a given carbon compound has ''negligible'' reactivity by comparing the compound's reactivity to the reactivity of ethane. EPA lists these compounds in its regulations at 40 CFR 51.100(s), and excludes them from the definition of VOC. The chemicals on this list are often called ''negligibly reactive.'' EPA may periodically revise the list of negligibly reactive compounds to add compounds to or delete them from the list.

TDEC's September 3, 1999, SIP revision changes rule 1200–3–9–.01 to add a total of 17 compounds to the list of compounds excluded from the definition of VOC in accordance with the federal list of compounds designated as having negligible photochemical reactivity at 40 CFR 51.100(s).

TABLE 1–16—COMPOUNDS ADDED TO THE LIST OF NEGLIGIBLY REACTIVE COMPOUNDS

Compound	Chemical name
HFC–32	Difluoromethane.
HFC–161	Ethylfluoride.
HFC–236fa	1,1,1,3,3,3-hexafluoropropane.
HFC–245ca	1,1,2,2,3-pentafluoropropane.
HFC–245ea	1,1,2,3,3-pentafluoropropane.
HFC–245eb	1,1,1,2,3-pentafluoropropane.
HFC–245fa	1,1,1,3,3-pentafluoropropane.
HFC–236ea	1,1,1,2,3,3-hexafluoropropane.
HFC–365mfc	1,1,1,3,3-pentafluorobutane.
HCFC–31	Chlorofluoromethane.
HCFC–123a	1,2-dichloro-1,1,2-trifluoroethane.
HCFC–151a	1-chloro-1-fluoroethane.
$C_4F_9OCH_3$	1,1,1,2,2,3,3,4,4-nonafluoro-4-methoxybutane.
$(CF_3)_2CFCF_2OCH_3$	2-(difluoromethoxymethyl)-1,1,1,2,3,3,3-heptafluoropropane.
$C_4F_9OC_2H_5$	1-ethoxy-1,1,2,2,3,3,4,4,4-nonafluorobutane.

TABLE 1–16—COMPOUNDS ADDED TO THE LIST OF NEGLIGIBLY REACTIVE COMPOUNDS—Continued

Compound	Chemical name
$(CF_3)CFCF_2OC_2H_5$	2-(ethoxydifluoromethyl)-1,1,1,2,3,3,3-heptafluoropropane.

II. Response to Comments

On February 19, 2013 (78 FR 11583), EPA published a direct final action and parallel proposed action to approve Tennessee's September 3, 1999, SIP submission to change rule 1200–3–9–.01 to add a total of 17 compounds to the list of compounds excluded from the definition of VOC to be consistent with EPA's definition of VOC at 40 CFR 51.100(s). EPA published a parallel proposal action in the event that adverse comments were received such that the direct final rule would need to be withdrawn. Specifically, in the direct final rule, EPA stated that if adverse comments were received by March 21, 2013, the direct final rule would be withdrawn and not take effect. EPA further stated that the corresponding proposed rule would remain in effect and that any adverse comment comments received would be responded to in a final rule provided EPA was able to address such comments.[1] On March 21, 2013, EPA received a comment. EPA interprets this comment as adverse although notably, it is arguably not a significant adverse comment requiring a response. EPA nonetheless withdrew the direct final rule. A summary of the comment received and EPA's response is provided below.

Comment: The Commenter stated ''[w]e are against and want disapproved the desired changes.''

Response: The Commenter provided a one-sentence statement with no rationale or basis as to why EPA should not approve Tennessee's September 3, 1999, SIP revision, except to state that the Commenter (and all who the Commenter purports to represent) are against it. In response to the comment which EPA interpreted as adverse, EPA withdrew the direct final rule. As mentioned in EPA's direct final rulemaking and again in today's final rule, Tennessee's September 3, 1999, SIP revision was in direct response to EPA's changes to the federal definition of VOC, and the purpose of the revision is to ensure that the Tennessee SIP is consistent with federal regulations. The Commenter raises no basis on which EPA could take any action other than a full approval of Tennessee's SIP submittal. Thus, EPA is now taking final action to approve Tennessee's September 3, 1999, SIP revision.

III. Final Action

EPA is approving the aforementioned changes to the State of Tennessee SIP, because they are consistent with EPA's definition of VOC and the CAA.

III. Statutory and Executive Order Reviews

Under the CAA, the Administrator is required to approve a SIP submission that complies with the provisions of the Act and applicable federal regulations. 42 U.S.C. 7410(k); 40 CFR 52.02(a). Thus, in reviewing SIP submissions, EPA's role is to approve state choices, provided that they meet the criteria of the CAA. Accordingly, this action merely approves state law as meeting federal requirements and does not impose additional requirements beyond those imposed by state law. For that reason, this action:

- Is not a ''significant regulatory action'' subject to review by the Office of Management and Budget under Executive Order 12866 (58 FR 51735, October 4, 1993);
- does not impose an information collection burden under the provisions of the Paperwork Reduction Act (44 U.S.C. 3501 *et seq.*);
- is certified as not having a significant economic impact on a substantial number of small entities under the Regulatory Flexibility Act (5 U.S.C. 601 *et seq.*);
- does not contain any unfunded mandate or significantly or uniquely affect small governments, as described in the Unfunded Mandates Reform Act of 1995 (Pub. L. 104–4);
- does not have Federalism implications as specified in Executive Order 13132 (64 FR 43255, August 10, 1999);
- is not an economically significant regulatory action based on health or safety risks subject to Executive Order 13045 (62 FR 19885, April 23, 1997);
- is not a significant regulatory action subject to Executive Order 13211 (66 FR 28355, May 22, 2001);
- is not subject to requirements of Section 12(d) of the National Technology Transfer and Advancement Act of 1995 (15 U.S.C. 272 note) because application of those requirements would be inconsistent with the CAA; and
- does not provide EPA with the discretionary authority to address, as appropriate, disproportionate human health or environmental effects, using practicable and legally permissible methods, under Executive Order 12898 (59 FR 7629, February 16, 1994).

In addition, this rule does not have tribal implications as specified by Executive Order 13175 (65 FR 67249, November 9, 2000), because the SIP is not approved to apply in Indian country, and EPA notes that it will not impose substantial direct costs on tribal governments or preempt tribal law.

The Congressional Review Act, 5 U.S.C. 801 *et seq.,* as added by the Small Business Regulatory Enforcement Fairness Act of 1996, generally provides that before a rule may take effect, the agency promulgating the rule must submit a rule report, which includes a copy of the rule, to each House of the Congress and to the Comptroller General of the United States. EPA will submit a report containing this action and other required information to the U.S. Senate, the U.S. House of Representatives, and the Comptroller General of the United States prior to publication of the rule in the **Federal Register**. A major rule cannot take effect until 60 days after it is published in the **Federal Register**. This action is not a ''major rule'' as defined by 5 U.S.C. 804(2).

Under section 307(b)(1) of the CAA, petitions for judicial review of this action must be filed in the United States Court of Appeals for the appropriate circuit by July 16, 2013. Filing a petition for reconsideration by the Administrator of this final rule does not affect the finality of this action for the purposes of judicial review nor does it extend the time within which a petition for judicial review may be filed, and shall not postpone the effectiveness of such rule or action. Parties with objections to this direct final rule are encouraged to file any comment in response to the parallel notice of proposed rulemaking for this action published in the proposed rules section of today's **Federal Register**, rather than file an immediate petition for judicial review of this direct final rule, so that EPA can withdraw this direct final rule and address the comment in the proposed rulemaking. This action may not be challenged later in proceedings to enforce its requirements. *See* section 307(b)(2).

[1] EPA also noted that an additional public comment period would not be instituted for the action.

List of Subjects in 40 CFR Part 52

Environmental protection, Air pollution control, Incorporation by reference, Intergovernmental relations, Reporting and recordkeeping requirements, Volatile organic compounds.

Dated: May 7, 2013.

A. Stanley Meiburg,

Acting Regional Administrator, Region 4.

40 CFR part 52, is amended as follows:

PART 52—[AMENDED]

■ 1. The authority citation for part 52 continues to read as follows:

Authority: 42 U.S.C. 7401 *et seq.*

Subpart RR—Tennessee

■ 2. In § 52.2220, table 1 in paragraph (c) is amended by revising the entry in Table 1 for ''Section 1200–3–9.01'' to read as follows:

§ 52.2220 Identification of plan.

* * * * *

(c) * * *

TABLE 1—EPA APPROVED TENNESSEE REGULATIONS

State citation	Title/subject	State effective date	EPA approval date	Explanation
*	*	*	*	*
CHAPTER 1200–3–9 CONSTRUCTION AND OPERATING PERMITS				
1200–3–9–.01 ...	Definitions	6/27/2011	5/17/2013 [Insert first page of publication].	On 5/17/2013 EPA revised this section to add 17 compounds to the list of compounds excluded from the definition of VOC that was state effective on 9/3/1999. EPA is approving Tennessee's July 29, 2011, SIP revisions to Chapter 1200–3–9–.01 with the exception of the term ''particulate matter emissions'' at 1200–03–09–.01(4)(b)47(vi) as part of the definition for ''regulated NSR pollutant'' regarding the inclusion of condensable emissions in applicability determinations and in establishing emissions limitations. EPA approved Tennessee's May 28, 2009 SIP revisions to Chapter 1200–3–9–.01 with the exception of the ''baseline actual emissions'' calculation revision found at 1200–3–9–.01 (4)(b)45(i)(III), (4)(b)45(ii)(IV), (5)(b)1(xlvii)(I)(III) and (5)(b)1(xlvii)(II)(IV) of the submittal.
*	*	*	*	*

* * * * *

[FR Doc. 2013–11681 Filed 5–16–13; 8:45 am]

BILLING CODE 6560–50–P

ENVIRONMENTAL PROTECTION AGENCY

40 CFR Part 82

[EPA–HQ–OAR–2003–0118; FRL–9813–6]

RIN 2060–AG12

Protection of Stratospheric Ozone: Determination 28 for Significant New Alternatives Policy Program

AGENCY: Environmental Protection Agency (EPA).

ACTION: Determination of Acceptability.

SUMMARY: This Determination of Acceptability expands the list of acceptable substitutes for ozone-depleting substances under the U.S. Environmental Protection Agency's (EPA) Significant New Alternatives Policy (SNAP) program. The determinations concern new substitutes for use in the refrigeration and air conditioning; foam blowing; solvent cleaning; adhesives, coatings and inks; and fire suppression sectors.

DATES: This determination is effective on May 17, 2013.

ADDRESSES: EPA has established a docket for this action under Docket ID No. EPA–HQ–OAR–2003–0118 (continuation of Air Docket A–91–42). All electronic documents in the docket are listed in the index at *http://www.regulations.gov*. Although listed in the index, some information is not publicly available, i.e., Confidential Business Information (CBI) or other information whose disclosure is restricted by statute. Publicly available docket materials are available either electronically at *http://www.regulations.gov* or in hard copy at the EPA Air Docket (No. A–91–42), EPA/DC, EPA West, Room 3334, 1301 Constitution Ave. NW., Washington, DC. The Public Reading Room is open from 8:30 a.m. to 4:30 p.m., Monday through Friday, excluding legal holidays. The telephone number for the Public Reading Room is (202) 566–1744, and the telephone number for the Air Docket is (202) 566–1742.

FOR FURTHER INFORMATION CONTACT: Margaret Sheppard by telephone at (202) 343–9163, by facsimile at (202) 343–2338, by email at *sheppard.margaret@epa.gov,* or by mail at U.S. Environmental Protection Agency, Mail Code 6205J, 1200 Pennsylvania Avenue NW., Washington, DC 20460. Overnight or courier deliveries should be sent to the office location at 1310 L Street NW., 10th floor, Washington, DC 20005.

For more information on the Agency's process for administering the SNAP program or criteria for evaluation of substitutes, refer to the original SNAP rulemaking published in the **Federal Register** on March 18, 1994 (59 FR 13044). Notices and rulemakings under the SNAP program, as well as other EPA publications on protection of stratospheric ozone, are available at EPA's Ozone Depletion World Wide Web site at *http://www.epa.gov/ozone/* including the SNAP portion at *http://www.epa.gov/ozone/snap/*.

SUPPLEMENTARY INFORMATION:

I. Listing of New Acceptable Substitutes
A. Refrigeration and Air Conditioning
B. Foam Blowing
C. Solvent Cleaning
D. Adhesives, Coatings and Inks
E. Fire Suppression
II. Section 612 Program
A. Statutory Requirements and Authority for the SNAP Program
B. EPA's Regulations Implementing Section 612
C. How the Regulations for the SNAP Program Work
D. Additional Information About the SNAP Program
Appendix A—Summary of Decisions for New Acceptable Substitutes

I. Listing of New Acceptable Substitutes

This section presents EPA's most recent acceptable listing decisions for substitutes in the refrigeration and air conditioning; foam blowing; solvent cleaning; adhesives, coatings and inks; and fire suppression sectors. For copies of the full list of substitutes in all of the regulated industrial sectors, visit EPA's Ozone Layer Protection Web site at *http://www.epa.gov/ozone/snap/lists/index.html*.

The sections below discuss each substitute listing in detail. Appendix A contains a table summarizing today's listing decisions for new substitutes. The statements in the ''Further Information'' column in the table provide additional information but are not legally binding under section 612 of the Clean Air Act (CAA). In addition, the ''further information'' may not be a comprehensive list of other legal obligations you may need to meet when using the substitute. Although you are not required to follow recommendations in the ''further information'' column of the table to use a substitute consistent with section 612 of the CAA, EPA strongly encourages you to apply the information when using these substitutes. In many instances, the information simply refers to standard operating practices in existing industry and/or building-code standards. However, some of these statements may refer to obligations that are enforceable or binding under federal or state programs other than the SNAP program. Many of these statements, if adopted, would not require significant changes to existing operating practices.

You can find submissions to EPA for the use of the substitutes listed in this document and other materials supporting the decisions in this action in docket EPA–HQ–OAR–2003–0118 at *http://www.regulations.gov*.

As described in this document and elsewhere, including the original SNAP rulemaking published in the **Federal Register** at 59 FR 13044 on March 18, 1994, the SNAP program evaluates substitutes within a comparative risk framework. The SNAP program compares new substitutes both to the ozone-depleting substances being phased out under the *Montreal Protocol on Substances that Deplete the Ozone Layer* and the CAA and to other available or potentially available alternatives for the same end uses. The environmental and health risk factors that the SNAP program considers include ozone depletion potential, flammability, toxicity, occupational and consumer health and safety, as well as contributions to global warming and other environmental factors. Environmental and human health exposures can vary significantly depending on the particular application of a substitute—and over time, information applicable to a substitute can change. This approach does not imply fundamental tradeoffs with respect to different types of risk, either to the environment or to human health. EPA recognizes that during the nearly two- decade long history of the SNAP program, new alternatives and new information about alternatives have emerged. To the extent possible, EPA considers new information and improved understanding of the risk factors for the environment and human health in the context of the available or potentially available alternatives for a given use.

A. Refrigeration and Air Conditioning

1. R–442A (RS–50)

EPA's decision: EPA finds R–442A acceptable as a substitute for use in retrofit equipment in:

- Ice skating rinks
- Commercial ice machines
- Retail food refrigeration (rack refrigeration systems only)

R–442A is a blend by weight of 31.1 percent hydrofluorocarbon (HFC)-125, which is also known as 1,1,1,2,2-pentafluoroethane (Chemical Abstracts Service Registry Number [CAS Reg. No.] 354–33–6), 30.0 percent HFC–134a, which is also known as 1,1,1,2-tetrafluoroethane (CAS Reg. No. 811–97–2), 3.0 percent R–152a, which is also known as 1,1-difluoroethane (CAS Reg. No. 75–37–6)], 5.0 percent HFC–227ea, which is also known as 1,1,1,2,3,3,3-heptafluoropropane (CAS Reg. No. 431–89–0), and 31.1 percent HFC–32, which is also known as difluoromethane (CAS Reg. No. 75–10–5). You may find the submission under Docket item EPA–HQ–OAR–2003–0118–0286 at *http://www.regulations.gov*.

Environmental information: R–442A has no ozone depletion potential (ODP). Its components (HFC–134a, HFC–125, HFC–227ea, HFC–32 and HFC–152a) have 100-year integrated (100-yr) global warming potentials (GWPs) of 1430,[1] 3500, 3220, 675 and 124 respectively. If these values are weighted by the mass percentage of the components, then R–442A has a GWP of about 1890. All components of R–442A are exempt from the definition of volatile organic compounds (VOC) under CAA regulations (see 40 CFR 51.100(s)) addressing the development of State Implementation Plans (SIPs) to attain and maintain the national ambient air quality standards. The emissions of this refrigerant will be limited given it is subject to the venting prohibition under section 608(c)(2) of the CAA and EPA's implementing regulations codified at 40 CFR 82.154(a)(1).

Flammability information: While some components are flammable, R–442A as formulated and in the worst-case fractionation formulation is not flammable.

Toxicity and exposure data: Potential health effects of this substitute include drowsiness, incoordination or dizziness. The substitute may also irritate the skin or eyes or cause frostbite. At sufficiently high concentrations, the substitute may cause irregular heartbeat. The substitute could cause asphyxiation if air is displaced by vapors in a confined space. These potential health effects are common to many refrigerants.

EPA anticipates that R–442A will be used consistent with the recommendations specified in the Material Safety Data Sheets (MSDSs) for the blend and for the individual components. For the blend, the manufacturer recommends an acceptable exposure limit (AEL) of 1000 ppm on an 8-hour time-weighted average (8-hr TWA). For HFC–134a, HFC–125, HFC–32 and HFC–152a, the American Industrial Hygiene Association (AIHA) recommends workplace environmental exposure limits (WEELs) of 1000 ppm on an 8-hr TWA. In addition, the manufacturer of HFC–227ea recommends an AEL of 1000 ppm on an 8-hr TWA. EPA anticipates that users will be able to meet workplace exposure limits (WEELs and manufacturer AELs) and address potential health risks by following

[1] Unless otherwise stated, all GWPs in this document are from: IPCC, 2007: *Climate Change 2007: The Physical Science Basis. Contribution of Working Group I to the Fourth Assessment Report of the Intergovernmental Panel on Climate Change* [Solomon, S., D. Qin, M. Manning, Z. Chen, M. Marquis, K.B. Averyt, M. Tignor and H.L. Miller (eds.)]. Cambridge University Press, Cambridge, United Kingdom and New York, NY, USA. This document is accessible at *http://www.ipcc.ch/publications_and_data/ar4/wg1/en/contents.html.*

requirements and recommendations in the MSDS and other safety precautions common to the refrigeration and air conditioning industry.

Comparison to other refrigerants: R–442A is not ozone-depleting, comparable to a number of other acceptable non-ozone-depleting substitutes for these end uses such as HFC–134a, R–410A, and R–404A. R–442A's lack of ozone depletion potential is in contrast to some other substitutes, such as R–401A, R–414A and other blends containing HCFC–22 or HCFC–142b [2] with ODPs ranging from about 0.01 to about 0.047, and HCFC–22 (with an ODP of 0.04 [3]), an ozone-depleting substance which it replaces. R–442A's GWP of about 1890 is lower than or comparable to that of a number of other substitutes in the same refrigeration and air conditioning end uses for which we are finding it acceptable. For example, the GWP for R–442A is lower than that of R–404A with a GWP of 3930 and comparable to that of R–410A with a GWP of 2100. R–442A's GWP is, however, higher than that of HFC–134a with a GWP of 1430. The GWP of R–442A is also comparable to those of ozone depleting substances it is replacing, such as HCFC–22 with a GWP of 1810. Flammability and toxicity risks are low, as discussed above, if used in accordance with the MSDSs. EPA finds R–442A acceptable for retrofit equipment in the end uses listed above because the overall environmental and human health risk posed by R–442A is lower than or comparable to the risks posed by other substitutes found acceptable in the same end uses for retrofit equipment.

B. Foam Blowing

1. Commercial Blends of HFC–365mfc and HFC–227ea (Solkane® 365/227)

EPA's decision: EPA finds commercial blends of HFC–365mfc and HFC–227ea, containing 7% to 13% HFC–227ea and the remainder HFC–365mfc, are acceptable as substitutes in:

- Rigid polyurethane spray
- Extruded polystyrene, boardstock and billet

HFC–365mfc is also known as 1,1,3,3,3-pentafluoropropane (CAS Reg. No. 138495–42–8), and HFC–227ea is also known as 1,1,1,2,3,3,3-heptafluoropropane (CAS Reg. No. 431–89–0). The manufacturer produces two commercial blends for foam blowing, one containing 93% HFC–365mfc and 7% HFC–227ea and the other containing 87% HFC–365mfc and 13% HFC–227ea, and these are marketed under the trade name Solkane® 365/227. You may find the submission under Docket item EPA–HQ–OAR–2003–0118–0278 at *http://www.regulations.gov.* EPA previously listed HFC–365mfc as an acceptable substitute for a number of foam blowing end uses (September 30, 2009; 74 FR 50129).

Environmental information: Blends of HFC–365mfc and HFC–227ea have no ODP. HFC–365mfc and HFC–227ea have 100-yr GWPs of 794 and 3220 respectively. The commercial blends of these components, if weighted by mass percentage, have GWPs of roughly 900 to 1100. Both HFC–365mfc and HFC–227ea are exempt from the definition of VOC under CAA regulations (see 40 CFR 51.100(s)) addressing the development of SIPs to attain and maintain the national ambient air quality standards.

Flammability information: By itself, HFC–365mfc is flammable. The commercial blends of HFC–365mfc and HFC–227ea are not flammable as formulated. However, care should be taken to follow all precautions in the MSDS and any guidance from the manufacturer, in cases where the non-flammable HFC–227ea may evaporate before the flammable component HFC–365mfc evaporates, especially with open containers of blowing agent or polyol premix.

Toxicity and exposure data: Potential health effects of this substitute include drowsiness or dizziness. The substitute may also irritate the skin or eyes or cause frostbite. At sufficiently high concentrations, the substitute may cause irregular heartbeat, unconsciousness or death. The substitute could cause asphyxiation if air is displaced by vapors in a confined space. These potential health effects are common to many foam blowing agents.

EPA anticipates that commercial blends of HFC-365mfc and HFC-227ea will be used consistent with the recommendations specified in the MSDSs for the blend and for the individual components. For HFC-365mfc, HFC-227ea and for the blends, the manufacturer recommends an AEL of 1000 ppm on an 8-hr TWA. EPA anticipates that users will be able to meet the manufacturer's AELs and address potential health risks by following requirements and recommendations in the MSDS and other safety precautions common in the foam blowing industry.

Comparison to other foam blowing agents: Commercial blends of HFC-365mfc and HFC-227ea are non-ozone depleting, comparable to a number of other acceptable non-ozone-depleting substitutes for these end uses, such as HFC-245fa, ecomate™ and CO_2. Commercial blends of HFC-365mfc and HFC-227ea have no ODP, compared to the acceptable substitute *trans*-1-chloro-3,3,3-trifluoroprop-1-ene with an ODP of approximately 0.00024 to 0.00034. The blends' lack of ODP is in contrast to an ODP of 1.0 for CFC-11 and an ODP of 0.12 [4] for HCFC-141b, ozone depleting substances which they replace. The GWPs of the commercial blends of HFC-365mfc and HFC-227ea of 900 to 1100 are lower than or comparable to those of some other substitutes in these end uses such as HFC-134a with a GWP of 1430 and HFC-245fa with a GWP of 1030. The GWP of the non-flammable commercial blends of HFC-365mfc and HFC-227ea is higher than that for some other acceptable, but flammable, substitutes such as HFC-365mfc [5] alone with a GWP of 794, Exxsol Blowing Agents with a GWP less than 10 and ecomate™ with a GWP less than 5. The GWPs of the commercial blends of HFC-365mfc and HFC-227ea of 900 to 1100 are higher than those of HCFC-141b with a GWP of 725 and are lower than CFC-11's GWP of 4750. Flammability and toxicity risks are low, as discussed above, if used in accordance with the MSDSs. We find that commercial blends of HFC-365mfc and HFC-227ea are acceptable because they do not pose a greater overall risk to public health and the environment than the other substitutes acceptable in the end uses listed above.

C. Solvent Cleaning

1. *Trans*-1-chloro-3,3,3-trifluoroprop-1-ene (Solstice™ 1233zd(E))

EPA's decision: EPA finds trans-1-chloro-3,3,3-trifluoroprop-1-ene acceptable as a substitute in:

[2] Under EPA's phaseout regulations, virgin HCFC–22, HCFC–142b and blends containing HCFC–22 or HCFC–142b may only be used to service existing appliances. Consequently, virgin HCFC–22, HCFC–142b and blends containing HCFC–22 or HCFC–142b may not be used to manufacture new pre-charged appliances or appliance components or to charge new appliances assembled onsite.

[3] Unless otherwise stated, all ODPs in this document are from WMO (World Meteorological Organization), 2010. Scientific Assessment of Ozone Depletion: 2010, Global Ozone Research and Monitoring Project—Report No. 52, 516 pp., Geneva, Switzerland, 2011. This document is accessible at *http://www.wmo.int/pages/prog/arep/gaw/ozone_2010/ozone_asst_report.html.*

[4] WMO (World Meteorological Organization), *Scientific Assessment of Ozone Depletion: 2006,* Global Ozone Research and Monitoring Project—Report No. 50, 572 pp., Geneva, Switzerland, 2007. This document is accessible at *http://www.wmo.int/pages/prog/arep/gaw/ozone_2006/ozone_asst_report.html.*

[5] HFC-365mfc alone is listed as acceptable in all foam blowing end uses with the exception of spray foam.

- Metals cleaning
- Electronics cleaning
- Precision cleaning

Trans-1-chloro-3,3,3-trifluoroprop-1-ene ((E) -1-chloro-3,3,3-trifluoroprop-1-ene, CAS Reg. No. 102687–65–0) is marketed under the trade names Solstice™ 1233zd(E) and Solstice™ Performance Fluid. EPA previously listed *trans*-1-chloro-3,3,3-trifluoroprop-1-ene as an acceptable alternative for various CFCs and HCFCs in a number of sectors and end uses (August 10, 2012, 77 FR 47768). You may find the redacted submission under Docket item EPA–HQ–OAR–2003–0118–0285 (continuation of Air Docket A–91–42) at *http://www.regulations.gov.*

Environmental information: Solstice™ 1233zd(E) is not regulated as an ODS but it has an ODP of 0.00024 to 0.00034.[6] [7] Estimates of this compound's potential to deplete the ozone layer found that even with worst-case estimates of emissions which assume that this compound would substitute for all compounds it could replace, the impact on global atmospheric ozone abundance would be statistically insignificant.[8] Solstice™ 1233zd(E) has a 100-yr GWP reported as 4.7 to 7 and an atmospheric lifetime of approximately 26 days.[9] [10] EPA has issued a proposed rule that, if finalized as proposed, would exempt Solstice™ 1233zd(E) from the definition of VOC under CAA regulations (see 40 CFR 51.100(s)) addressing the development of SIPs to attain and maintain the national ambient air quality standards (February 15, 2013; 79 FR 11101, 11119).

Flammability information: Solstice™ 1233zd(E) is not flammable.

Toxicity and exposure data: Potential health effects of this substitute include serious eye irritation, skin irritation, or frostbite. It may cause central nervous system effects such as drowsiness and dizziness. It could cause asphyxiation if air is displaced by vapors in a confined space.

EPA anticipates that Solstice™ 1233zd(E) will be used consistent with the recommendations specified in the manufacturer's MSDS. The manufacturer recommends an AEL of 300 ppm (8-hr TWA) for Solstice™ 1233zd(E). EPA also developed a short-term exposure limit (STEL) of 900 ppm over a 15-minute period, based on the submitter's 300 ppm AEL value. EPA anticipates that users will be able to meet the recommended workplace exposure limits (manufacturer's and EPA's) and address potential health risks by following requirements and recommendations in the MSDS and other safety precautions commonly used in the solvent cleaning industry.

Comparison to other cleaning solvents: Solstice™ 1233zd(E) has an ODP of 0.00024 to 0.00034. This is higher than the ODP of a number of acceptable non-ozone-depleting substitutes in these end uses such as HFC-4310mee, HFE-7100, acetone, and aqueous cleaners. The ODP of Solstice™ 1233zd(E) is comparable to the ODPs of *trans*-1,2-dichloroethylene and trichloroethylene and an order of magnitude lower than the ODP of perchloroethylene, other substitutes in the solvent cleaning sector that are not regulated as ODS.[11] [12] Solstice™ 1233zd(E)'s ODP is several orders of magnitude lower than that of ozone-depleting substances it replaces, including CFC-113, methyl chloroform, HCFC-225ca and HCFC-225cb (ODPs ranging from 0.02 to 0.85). Solstice™ 1233zd(E)'s GWP of 4.7 to 7 is lower than that of other substitutes in the metals, precision and electronics cleaning end uses, such as HFC-4310mee with a GWP of 1640 and HFE-7100 with a GWP of 297. Solstice™ 1233zd(E), a non-flammable compound, has a GWP that is comparable to or slightly higher than that of some other acceptable, but flammable, substitutes such as *trans*-1,2-dichloroethylene with a GWP less than 10 and acetone with a GWP of less than 1. Its climate impacts cannot be compared directly to those of aqueous cleaners with no direct GWP. Furthermore, the GWP of Solstice™ 1233zd(E) is several orders of magnitude less than those of ozone-depleting substances it replaces, including methyl chloroform, CFC-113, HCFC-225ca and HCFC-225cb (GWPs ranging from 122 to 6,130). Flammability and toxicity risks are low, as discussed above, if used in accordance with the MSDS. The potential health effects of Solstice™ 1233zd(E) are common to many solvents, including many of those already listed as acceptable under SNAP. EPA finds *trans*-1-chloro-3,3,3-trifluoroprop-1-ene (Solstice™ 1233zd(E)) acceptable in the end uses listed above because the overall environmental and human health risk posed by Solstice™ 1233zd(E) is lower than or comparable to the risks posed by other substitutes found acceptable in the same end uses.

D. Adhesives, Coatings and Inks

1. *Trans*-1-chloro-3,3,3-trifluoroprop-1-ene (Solstice™ 1233zd(E))

EPA's decision: EPA finds trans-1-chloro-3,3,3-trifluoroprop-1-ene acceptable as a substitute carrier solvent in:

- Adhesives
- Coatings

Trans-1-chloro-3,3,3-trifluoroprop-1-ene ((E) -1-chloro-3,3,3-trifluoroprop-1-ene, Chemical Abstracts Service Registry Number [CAS Reg. No.] 102687–65–0) is marketed under the trade names Solstice™ 1233zd(E) and Solstice™ Performance Fluid. EPA previously listed *trans*-1-chloro-3,3,3-trifluoroprop-1-ene as an acceptable alternative for various CFCs and HCFCs in a number of sectors and end uses (August 10, 2012, 77 FR 47768). You may find the redacted submission under Docket item EPA–HQ–OAR–2003–0118–0285 (continuation of Air Docket A–91–42) at *http://www.regulations.gov.*

Environmental information: The environmental information for this substitute is set forth in the ''Environmental information'' section in listing C.1. above.

Flammability information: Solstice™ 1233zd(E) is not flammable.

Toxicity and exposure data: The toxicity information for this substitute is set forth in the ''Toxicity and exposure data'' section in listing C.1. above.

EPA anticipates that Solstice™ 1233zd(E) will be used consistent with the recommendations specified in the manufacturer's MSDS. The manufacturer recommends an AEL of 300 ppm (8-hour TWA) for Solstice™ 1233zd(E). EPA also developed a STEL of 900 ppm over a 15-minute period, based on the submitter's 300 ppm AEL value. EPA anticipates that users will be able to meet the recommended workplace exposure limits (manufacturer and EPA recommendations) and address potential health risks by following

[6] Wang D., Olsen S., Wuebbles D. 2011. ''Preliminary Report: Analyses of tCFP's Potential Impact on Atmospheric Ozone.'' Department of Atmospheric Sciences. University of Illinois, Urbana, IL. September 26, 2011.

[7] Patten and Wuebbles, 2010. ''Atmospheric Lifetimes and Ozone Depletion Potentials of *trans*-1-chloro-3,3,3-trichloropropylene and *trans*-1,2-dichloroethylene in a three-dimensional model.'' *Atmos. Chem. Phys.,* 10, 10867–10874, 2010.

[8] Wang et al., 2011. *Op. cit.*

[9] Sulbaek, Andersen, Nilsson, Neilsen, Johnson, Hurley and Wallington, ''Atmospheric chemistry of trans-CF3CH=CHCl: Kinetics of the gas-phase reactions with Cl atoms, OH radicals, and O_3'', *Jrnl of Photochemistry and Photobiology A: Chemistry* 199 (2008) 92–97; and Wang D., Olsen S., Wuebbles D. Undated. ''Three-Dimensional Model Evaluation of the Global Warming Potentials for tCFP.'' Department of Atmospheric Sciences. University of Illinois, Urbana, IL. Draft report, undated.

[10] Wang et al. 2011 and Sulbaek Andersen et al., 2008. *Op cit.*

[11] Wuebbles and Patten, 2010. Atmospheric lifetimes and Ozone Depletion Potentials of trans-1-chloro-3,3,3-trifluoropropylene and trans-1,2-dichloroethylene in a three-dimensional model. *Atmos. Chem. Phys.,* 10, 10867–10874, 2010.

[12] WMO, 2010. Section 1.3.6.2.

requirements and recommendations in the MSDS and other safety precautions common when using adhesives or coatings.

Comparison to other carrier solvents in adhesives and coatings: Solstice™ 1233zd(E) has an ODP of 0.00024 to 0.00034. This is higher than the ODP of a number of substitutes in these end uses such as HFE-7100, acetone and ultraviolet-cured formulations and is comparable to the ODP of *trans*-1,2-dichloroethylene, another acceptable substitute in the adhesives and coatings end uses that is not regulated as an ODS.[13] [14] Solstice™ 1233zd(E)'s ODP is several orders of magnitude lower than those of ozone-depleting substances it replaces, including methyl chloroform and HCFC-141b (ODPs respectively of 0.16 and 0.012). Solstice™ 1233zd(E)'s GWP of 4.7 to 7 is lower than that of some substitutes in the adhesives and coatings end uses, such as HFE-7100 with a GWP of 297. Solstice™ 1233zd(E), a non-flammable compound, has a GWP that is comparable to or slightly higher than that of some other acceptable, but flammable, substitutes such as *trans*-dichloroethylene with a GWP less than 10 and acetone with a GWP of less than one. Its climate impacts cannot be compared directly to those of ultraviolet-cured formulations with no direct GWP. Furthermore, the GWP of Solstice™ 1233zd(E) is one to two orders of magnitude less than those of methyl chloroform and HCFC-141b, ozone-depleting substances in these end uses (GWPs ranging from 146 to 725). Flammability and toxicity risks are low, as discussed above, if used in accordance with the MSDS. The potential health effects of Solstice™ 1233zd(E) are common to many carrier solvents, including many of those already listed as acceptable under SNAP. EPA finds *trans*-1-chloro-3,3,3-trifluoroprop-1-ene (Solstice™ 1233zd(E)) acceptable in the end uses listed above because the overall environmental and human health risk posed by Solstice™ 1233zd(E) is lower than or comparable to the risks posed by other substitutes found acceptable in the same end uses.

E. Fire Suppression

1. K-Ace

EPA's decision: EPA finds K-Ace acceptable as a substitute for total flooding uses in both occupied and unoccupied areas.

K-Ace is a blend by weight of 50% percent potassium acetate, which is also known as $C_2H_3KO_2$ (CAS Reg. No. 127–08–2), and 50% water (CAS Reg. No. 7732–18–5). You may find the submission under Docket item EPA–HQ–OAR–2003–0118–0320 (continuation of Air Docket A–91–42) at *http://www.regulations.gov*.

Environmental information: K-Ace has no ODP and no GWP. K-Ace does not contain any VOC as defined under CAA regulations (see 40 CFR 51.100(s)) addressing the development of SIPs to attain and maintain the national ambient air quality standards.

K-Ace is expected to aerosolize rapidly during expulsion from the fire suppression system and then settle as a salt water film on surfaces in the space being protected, rather than becoming airborne and moving to surface waters. After settling, cleanup would involve confining the release and recovering as much of the solution as possible, and washing or rinsing of surfaces. During cleanup, we recommend that discharges of K-Ace be disposed of in accordance with local, state, and federal requirements and the manufacturer's MSDS.

Flammability information: K-Ace is not flammable.

Toxicity and exposure data: K-Ace is not expected to pose a risk to human health, as the active ingredient is potassium acetate, which is commonly used in pharmaceuticals, foods, and textiles. Potassium acetate is approved by the U.S. Food and Drug Administration (FDA) as a synthetic flavoring (21 CFR 172.515) and to treat diabetic ketoacidosis via injection (FDA Application No. NDA 018896). Potassium acetate may cause gastrointestinal discomfort or minor irritation to the eyes, skin, or respiratory tract. Given the low toxicity of its constituents, EPA expects no adverse health effects when the recommended safety precautions and normal industry practices are applied and use of the substitute is in accordance with the manufacturer's MSDS. To minimize worker exposure to any chemicals during manufacture, installation, and maintenance through an accidental release or spill, EPA has outlined the following recommendations in accordance with established good manufacturing practices:

- Training in safe handling procedures for employees that would likely handle containers of K-Ace or extinguishing units filled with the material;
- Use of PPE selected in accordance with the OSHA Technical Manual by employees handling the proposed substitute;
- Adequate ventilation;
- Clean-up of all spills immediately in accordance with good industrial hygiene practices.

Comparison to other fire suppressants: K-Ace has no ODP or GWP. K-Ace's ODP of zero is comparable to those of other acceptable non-ozone-depleting substitutes for this end use, such as Cold Fire®, Inert Gas 541, HFC-227ea, and HFC-125, and in contrast to Halon 1301, an ODS which it replaces, with an ODP of 16.. K-Ace's GWP of zero is less than that of a number of other acceptable substitutes for this end use, such as HFC-227ea with a GWP of 3220 and HFC-125 with a GWP of 3500 and is comparable to that of other acceptable substitutes for this end use, such as Cold Fire® with a GWP of 0 and Inert Gas 541 with a GWP of 0. Furthermore, K-Ace's GWP is lower than that of Halon 1301, an ODS it replaces, with a direct GWP of 7140. Toxicity risks are low, as discussed above, if used in accordance with the MSDS. EPA finds K-Ace acceptable in the end use listed above because the overall environmental and human health risk posed by K-Ace is lower than or comparable to the risks posed by other substitutes found acceptable in the same end use.

II. Section 612 Program

A. Statutory Requirements and Authority for the SNAP Program

Section 612 of the Clean Air Act (CAA) requires EPA to develop a program for evaluating alternatives to ozone-depleting substances (ODSs). EPA refers to this program as the Significant New Alternatives Policy (SNAP) program. The major provisions of section 612 are:

1. Rulemaking

Section 612(c) requires EPA to promulgate rules making it unlawful to replace any class I substance (chlorofluorocarbon, halon, carbon tetrachloride, methyl chloroform, and hydrobromofluorocarbon) or class II substance (hydrochlorofluorocarbon) with any substitute that the Administrator determines may present adverse effects to human health or the environment where the Administrator has identified an alternative that (1) reduces the overall risk to human health and the environment, and (2) is currently or potentially available.

2. Listing of Unacceptable/Acceptable Substitutes

Section 612(c) requires EPA to publish a list of the substitutes unacceptable for specific uses and to publish a corresponding list of

[13] *Op cit.*

[14] *Op cit.*

acceptable alternatives for specific uses. The list of acceptable substitutes may be found at *http://www.epa.gov/ozone/snap/lists/index.html* and the lists of ''unacceptable,'' ''acceptable subject to use conditions,'' and ''acceptable subject to narrowed use limits'' substitutes are found in the appendices to subpart G of 40 CFR part 82.

3. Petition Process

Section 612(d) grants the right to any person to petition EPA to add a substance to, or delete a substance from, the lists published in accordance with section 612(c). The Agency has 90 days to grant or deny a petition. Where the Agency grants the petition, EPA must publish the revised lists within an additional six months.

4. 90-Day Notification

Section 612(e) directs EPA to require any person who produces a chemical substitute for a class I substance to notify the Agency not less than 90 days before new or existing chemicals are introduced into interstate commerce for significant new uses as substitutes for a class I substance. The producer must also provide the Agency with the producer's unpublished health and safety studies on such substitutes.

5. Outreach

Section 612(b)(1) states that the Administrator shall seek to maximize the use of federal research facilities and resources to assist users of class I and II substances in identifying and developing alternatives to the use of such substances in key commercial applications.

6. Clearinghouse

Section 612(b)(4) requires the Agency to set up a public clearinghouse of alternative chemicals, product substitutes, and alternative manufacturing processes that are available for products and manufacturing processes which use class I and II substances.

B. EPA's Regulations Implementing Section 612

On March 18, 1994, EPA published the original rulemaking (59 FR 13044) which established the process for administering the SNAP program and issued EPA's first lists identifying acceptable and unacceptable substitutes in the major industrial use sectors (subpart G of 40 CFR part 82). These sectors—refrigeration and air conditioning; foam blowing; cleaning solvents; fire suppression and explosion protection; sterilants; aerosols; adhesives, coatings and inks; and tobacco expansion—are the principal industrial sectors that historically consumed the largest volumes of ODS.

Section 612 of the CAA requires EPA to list as acceptable those substitutes that do not present a significantly greater risk to human health and the environment as compared with other substitutes that are currently or potentially available.

C. How the Regulations for the SNAP Program Work

Under the SNAP regulations, anyone who plans to market or produce a substitute to replace a class I substance or class II substance in one of the eight major industrial use sectors must provide notice to the Agency, including health and safety information on the substitute, at least 90 days before introducing it into interstate commerce for significant new use as an alternative. 40 CFR 82.176(a). This requirement applies to the persons planning to introduce the substitute into interstate commerce,[15] which typically are chemical manufacturers but may include importers, formulators, equipment manufacturers, and end-users when they are responsible for introducing a substitute into commerce.[16] The 90-day SNAP review process begins once EPA receives the submission and determines that the submission includes complete and adequate data. 40 CFR 82.180(a). The CAA and the SNAP regulations, 40 CFR 82.174(a), prohibit use of a substitute earlier than 90 days after notice has been provided to the Agency.

The Agency has identified four possible decision categories for substitutes that are submitted for evaluation: acceptable; acceptable subject to use conditions; acceptable subject to narrowed use limits; and unacceptable[17] (40 CFR 82.180(b)). Use conditions and narrowed use limits are both considered ''use restrictions'' and are explained below. Substitutes that are deemed acceptable with no use restrictions (no use conditions or narrowed use limits) can be used for all applications within the relevant end-uses within the sector. Substitutes that are acceptable subject to use restrictions may be used only in accordance with those restrictions.

After reviewing a substitute, the Agency may make a determination that a substitute is acceptable only if certain conditions in the way that the substitute is used are met to minimize risks to human health and the environment. EPA describes such substitutes as ''acceptable subject to use conditions.'' Entities that use these substitutes without meeting the associated use conditions are in violation of EPA's SNAP regulations. 40 CFR 82.174(c).

For some substitutes, the Agency may permit a narrowed range of use within an end-use or sector. For example, the Agency may limit the use of a substitute to certain end-uses or specific applications within an industry sector. EPA describes these substitutes as ''acceptable subject to narrowed use limits.'' A person using a substitute that is acceptable subject to narrowed use limits in applications and end-uses that are not consistent with the narrowed use limit is using the substitute in an unacceptable manner and is in violation of section 612 of the CAA and EPA's SNAP regulations. 40 CFR 82.174(c).

The Agency publishes its SNAP program decisions in the **Federal Register** (FR). EPA publishes decisions concerning substitutes that are deemed acceptable subject to use restrictions (use conditions and/or narrowed use limits), or substitutes deemed unacceptable, as proposed rulemakings to provide the public with an opportunity to comment, before publishing final decisions.

In contrast, EPA publishes decisions concerning substitutes that are deemed acceptable with no restrictions as ''notices of acceptability'' or ''determinations of acceptability,'' rather than as proposed and final rules. As described in the preamble to the rule initially implementing the SNAP program in the **Federal Register** at 59 FR 13044 on March 18, 1994, EPA does not believe that rulemaking procedures are necessary to list alternatives that are acceptable without restrictions because such listings neither impose any sanction nor prevent anyone from using a substitute.

D. Additional Information About the SNAP Program

For copies of the comprehensive SNAP lists of substitutes or additional information on SNAP, refer to EPA's

[15] As defined at 40 CFR 82.104, ''interstate commerce'' means the distribution or transportation of any product between one state, territory, possession or the District of Columbia, and another state, territory, possession or the District of Columbia, or the sale, use or manufacture of any product in more than one state, territory, possession or District of Columbia. The entry points for which a product is introduced into interstate commerce are the release of a product from the facility in which the product was manufactured, the entry into a warehouse from which the domestic manufacturer releases the product for sale or distribution, and at the site of United States Customs clearance.

[16] As defined at 40 CFR 82.172, ''end-use'' means processes or classes of specific applications within major industrial sectors where a substitute is used to replace an ODS.

[17] The SNAP regulations also include ''pending,'' referring to submissions for which EPA has not reached a determination, under this provision.

Ozone Depletion Web site at: *www.epa.gov/ozone/snap/index.html.* For more information on the Agency's process for administering the SNAP program or criteria for evaluation of substitutes, refer to the SNAP final rulemaking in the **Federal Register** at 59 FR 13044 on March 18, 1994, codified at 40 CFR part 82, subpart G. A complete chronology of SNAP decisions and the appropriate citations is found at: *http://www.epa.gov/ozone/snap/chron.html.*

List of Subjects in 40 CFR Part 82

Environmental protection, Administrative practice and procedure, Air pollution control, Reporting and recordkeeping requirements.

Dated: May 3, 2013.

Sarah Dunham,

Director, Office of Atmospheric Programs.

Appendix A: Summary of Acceptable Decisions

REFRIGERATION AND AIR CONDITIONING

End-Use	Substitute	Decision	Further information [1]
Ice skating rinks *(retrofit only)*.	R–442A (RS–50)	Acceptable	The manufacturer has an acceptable exposure limit of 1000 ppm over an 8-hour time-weighted average for R–442A.
Commercial ice machines *(retrofit only)*.	R–442A (RS–50)	Acceptable	The manufacturer has an acceptable exposure limit of 1000 ppm over an 8-hour time-weighted average for R–442A.
Retail food refrigeration (rack refrigeration systems only) *(retrofit only)*.	R–442A (RS–50)	Acceptable	The manufacturer has an acceptable exposure limit of 1000 ppm over an 8-hour time-weighted average for R–442A.

[1] Follow all precautions in the MSDS and any guidance from the manufacturer.

FOAM BLOWING AGENTS

End-Use	Substitute	Decision	Further information [1]
Rigid polyurethane spray	Commercial blends of HFC–365mfc and HFC–227ea containing 7% to 13% HFC–227ea and the remainder HFC–365mfc (Solkane® 365/227).	Acceptable	The manufacturer has an acceptable exposure limit of 1000 ppm over an 8-hour time-weighted average for HFC–365mfc/HFC–227ea. Care should be taken to follow all precautions in the MSDS and any guidance from the manufacturer, particularly in cases where the non-flammable HFC–227ea may evaporate before the flammable component, HFC–365mfc, evaporates, especially with open containers of blowing agent or polyol premix.
Extruded polystyrene, boardstock and billet.	Commercial blends of HFC–365mfc and HFC–227ea containing 7% to 13% HFC–227ea and the remainder HFC–365mfc (Solkane® 365/227).	Acceptable	The manufacturer has an acceptable exposure limit of 1000 ppm over an 8-hour time-weighted average for HFC–365mfc/HFC–227ea. Care should be taken to follow all precautions in the MSDS and any guidance from the manufacturer, particularly in cases where the non-flammable HFC–227ea may evaporate before the flammable component, HFC–365mfc, evaporates, especially with open containers of blowing agent or polyol premix.

[1] Follow all precautions in the MSDS and any guidance from the manufacturer.

SOLVENT CLEANING

End-Uses	Substitute	Decision	Further information
Metals cleaning	*Trans*-1-chloro-3,3,3-trifluoroprop-1-ene (Solstice™ 1233zd(E)).	Acceptable	*Trans*-1-chloro-3,3,3-trifluoroprop-1-ene has an ODP of approximately 0.00024 at temperate latitudes. It has a 100-year global warming potential of 4.7 to 7. Its Chemical Abstracts Service Registry number (CAS Reg. No.) is 102687–65–0.
Electronics cleaning			The manufacturer recommends an acceptable exposure limit of 300 ppm over an 8-hour time-weighted average for *trans*-1-chloro-3,3,3-trifluoroprop-1-ene.

SOLVENT CLEANING—Continued

End-Uses	Substitute	Decision	Further information
Precision cleaning			Note that this substitute boils at room temperature. Therefore, EPA recommends using this substitute in equipment designed to minimize solvent losses, emissions and worker exposure. Examples of such equipment include containers with connected hoses and valves that allow for direct transfer of the solvent to cleaning equipment without opening of the storage container, and enclosed or low-emission cleaning equipment. Observe recommendations in the manufacturer's MSDS and guidance for using this substitute.

ADHESIVES, COATINGS AND INKS

End-Uses	Substitute	Decision	Further information
Adhesives ..... Coatings	*Trans*-1-chloro-3,3,3-trifluoroprop-1-ene (Solstice™ 1233zd(E)).	Acceptable ..	*Trans*-1-chloro-3,3,3-trifluoroprop-1-ene has an ODP of approximately 0.00024 at temperate latitudes. It has a 100-year global warming potential of 4.7 to 7. Its Chemical Abstracts Service Registry number (CAS Reg. No.) is 102687–65–0. The manufacturer recommends an acceptable exposure limit of 300 ppm over an 8-hour time-weighted average for *trans*-1-chloro-3,3,3-trifluoroprop-1-ene. Note that this substitute boils at room temperature, which may require some adjustments when switching to this substitute. At this time, it appears to be particularly suitable for spray adhesive applications and dip coatings. Observe recommendations in the manufacturer's MSDS and guidance for using this substitute.

FIRE SUPPRESSION

End-Use	Substitute	Decision	Further information [1] [2]
Total flooding systems *(occupied and unoccupied areas).*	K-Ace (solution of 50% potassium acetate and 50% water)..	Acceptable ..	EPA recommends that use of this system should be in accordance with the manufacturer's MSDS.

[1] EPA recommends that users consult Section VIII of the OSHA Technical Manual for information on selecting the appropriate types of personal protective equipment for all listed fire suppression agents. EPA has no intention of duplicating or displacing OSHA coverage related to the use of personal protective equipment (e.g., respiratory protection), fire protection, hazard communication, worker training or any other occupational safety and health standard with respect to halon substitutes.

[2] Use of all listed fire suppression agents should conform to relevant OSHA requirements, including 29 CFR Part 1910, subpart L, sections 1910.160 and 1910.162.

[FR Doc. 2013–11871 Filed 5–16–13; 8:45 am]

BILLING CODE 6560–50–P

ENVIRONMENTAL PROTECTION AGENCY

40 CFR Part 180

[EPA–HQ–OPP–2010–0889; FRL–9371–4]

Sulfoxaflor; Pesticide Tolerances

AGENCY: Environmental Protection Agency (EPA).

ACTION: Final rule.

SUMMARY: This regulation establishes tolerances for residues of sulfoxaflor in or on multiple commodities which are identified and discussed later in this document. DOW AgroSciences LLC requested these tolerances under the Federal Food, Drug, and Cosmetic Act (FFDCA).

DATES: This regulation is effective May 17, 2013. Objections and requests for hearings must be received on or before July 16, 2013, and must be filed in accordance with the instructions provided in 40 CFR part 178 (see also Unit I.C. of the **SUPPLEMENTARY INFORMATION**).

ADDRESSES: The docket for this action, identified by docket identification (ID) number EPA–HQ–OPP–2010–0889, is available at *http://www.regulations.gov* or at the Office of Pesticide Programs Regulatory Public Docket (OPP Docket) in the Environmental Protection Agency Docket Center (EPA/DC), EPA West Bldg., Rm. 3334, 1301 Constitution Ave. NW., Washington, DC 20460–0001. The Public Reading Room is open from 8:30 a.m. to 4:30 p.m., Monday through Friday, excluding legal holidays. The telephone number for the Public Reading Room is (202) 566–1744, and the telephone number for the OPP Docket is (703) 305–5805. Please review the visitor instructions and additional information about the docket available at *http://www.epa.gov/dockets.*

FOR FURTHER INFORMATION CONTACT: Jennifer Urbanski, Registration Division, Office of Pesticide Programs, Environmental Protection Agency, 1200 Pennsylvania Ave. NW., Washington, DC 20460–0001; telephone number: (703) 347–0156; email address: *urbanski.jennifer@epa.gov.*

SUPPLEMENTARY INFORMATION:

I. General Information

A. Does this action apply to me?

You may be potentially affected by this action if you are an agricultural producer, food manufacturer, or pesticide manufacturer. The following list of North American Industrial Classification System (NAICS) codes is not intended to be exhaustive, but rather provides a guide to help readers determine whether this document applies to them. Potentially affected entities may include:

- Crop production (NAICS code 111).
- Animal production (NAICS code 112).
- Food manufacturing (NAICS code 311).
- Pesticide manufacturing (NAICS code 32532).

B. How can I get electronic access to other related information?

You may access a frequently updated electronic version of EPA's tolerance regulations at 40 CFR part 180 through the Government Printing Office's e-CFR site at *http://ecfr.gpoaccess.gov/cgi/t/text/text-idx?&c=ecfr&tpl=/ecfrbrowse/Title40/40tab_02.tpl.*

C. How can I file an objection or hearing request?

Under FFDCA section 408(g), 21 U.S.C. 346a, any person may file an objection to any aspect of this regulation and may also request a hearing on those objections. You must file your objection or request a hearing on this regulation in accordance with the instructions provided in 40 CFR part 178. To ensure proper receipt by EPA, you must identify docket ID number EPA–HQ–OPP–2010–0889 in the subject line on the first page of your submission. All objections and requests for a hearing must be in writing, and must be received by the Hearing Clerk on or before July 16, 2013. Addresses for mail and hand delivery of objections and hearing requests are provided in 40 CFR 178.25(b).

In addition to filing an objection or hearing request with the Hearing Clerk as described in 40 CFR part 178, please submit a copy of the filing (excluding any Confidential Business Information (CBI)) for inclusion in the public docket. Information not marked confidential pursuant to 40 CFR part 2 may be disclosed publicly by EPA without prior notice. Submit the non-CBI copy of your objection or hearing request, identified by docket ID number EPA–HQ–OPP–2010–0889, by one of the following methods:

- *Federal eRulemaking Portal: http://www.regulations.gov.* Follow the online instructions for submitting comments. Do not submit electronically any information you consider to be Confidential Business Information (CBI) or other information whose disclosure is restricted by statute.
- *Mail:* OPP Docket, Environmental Protection Agency Docket Center (EPA/DC), (28221T), 1200 Pennsylvania Ave., NW., Washington, DC 20460–0001.
- *Hand Delivery:* To make special arrangements for hand delivery or delivery of boxed information, please follow the instructions at *http://www.epa.gov/dockets/contacts.htm.*

Additional instructions on commenting or visiting the docket, along with more information about dockets generally, is available at *http://www.epa.gov/dockets.*

II. Summary of Petitioned-For Tolerance

In the **Federal Register** of July 25, 2012 (77 FR 43562) (FRL–9353–6), EPA issued a document pursuant to FFDCA section 408(d)(3), 21 U.S.C. 346a(d)(3), announcing the filing of a pesticide petition (PP 0F7777) by DOW AgroSciences LLC, 9330 Zionsville Road, Indianapolis, IN, 46268. The petition requested that 40 CFR part 180 be amended by establishing tolerances for residues of the insecticide sulfoxaflor, or 1-(6-trifluoromethylpyridin-3-yl)ethyl](methyl)-oxido-λ4-sulfanylidenecyanamide, in or on Crop group 1, subgroup 1A, 1B, Root Vegetables at 0.05 ppm (from carrot, roots at 0.05 ppm; beet, sugar, roots at 0.03 ppm; radish, roots at 0.03 ppm); carrot, juice at 0.15 ppm; beet, sugar, raw sugar at 0.04 ppm; beet, sugar, molasses at 0.3 ppm; beet, sugar, thick juice at 0.15 ppm; beet, sugar, dried pulp at 0.07 ppm; subgroup 1C, 1D, Tuberous and Corm Vegetables at 0.01 ppm; potato at 0.01 ppm; potato, wet peel at 0.02 ppm; potato, chips at 0.02 ppm; potato, dried at 0.02 ppm; potato, granules/flakes at 0.02 ppm; Crop group 2 Leaves of Root and Tuber Vegetables at 4 ppm (from carrot, tops at 4 ppm; beet, sugar, tops at 3 ppm; radish, tops at 0.7 ppm); Crop group 3, subgroup 3–07A Bulb vegetables, Onion, bulb, subgroup at 0.01 ppm (from onion, dry bulb at 0.01 ppm); subgroup 3–07B Bulb Vegetables, Onion, green, subgroup at 0.6 ppm (from onion, green at 0.6 ppm); Crop group 4, subgroup 4A Leafy Vegetables (except Brassica), Leafy greens, subgroup at 5 ppm (from leafy greens at 1.6 ppm); subgroup 4B Leafy Vegetables (except Brassica), Leafy petioles, subgroup at 1 ppm; (from celery at 1 ppm); Crop group 5, subgroup 5A Brassica Leafy Vegetables, head and stem (except cauliflower) at 1 ppm (from cauliflower at 0.08 ppm; broccoli at 0.45 ppm; cabbage at 1 ppm); subgroup 5B Brassica Leafy Vegetables (from mustard greens at 1.6 ppm); green bean, snap, succulent at 0.7 ppm; beans, dry at 0.25 ppm; Crop group 8 Fruiting Vegetables (except cucurbits, plus okra) at 1.2 ppm (from tomato at 0.45 ppm; pepper, bell and non-bell at 1.2 ppm); tomato, puree at 0.7 ppm; tomato, paste at 1.6 ppm; tomato, catsup at 0.8 ppm; Crop group 9 Cucurbit Vegetables (except squash) at 0.3 ppm (from cucumber at 0.3 ppm; melon at 0.3 ppm); squash at 0.03 ppm; Crop group 10 Citrus Fruits at 0.6 ppm (from orange at 0.6 ppm; lemon at 0.45 ppm; grapefruit at 0.25 ppm); citrus, peel at 1 ppm; citrus, dried pulp, at 0.9 ppm; Crop group 11 Pome Fruits at 0.4 ppm (from apple at 0.3 ppm; pear at 0.4 ppm); apple, dried pomace at 1.3 ppm; Crop Group 12 Stone Fruits (except cherry) at 0.6 ppm (from nectarine, pitted fruit at 0.3 ppm; peach, pitted fruit at 0.6 ppm; plum, pitted fruit at 0.25 ppm); cherry, pitted fruit at 2.5 ppm; cherry, dried cherry at 15 ppm; Crop group 13, subgroup 13–07F Small Fruit Vine Climbing subgroup (except fuzzy kiwifruit) at 1.3 ppm (from grape at 1.3 ppm); grape, raisins at 5 ppm; subgroup 13–07G Low Growing Berry subgroup at 0.6 ppm (from strawberry, fruit at 0.6 ppm); Crop group 14 Tree Nuts (plus pistachio) at 0.02 ppm (from almond at 0.02 ppm; pistachio at 0.02 ppm; pecan at 0.01 ppm); almond, hulls at 4 ppm; Crop group 20, subgroup 20–A Rapeseed subgroup at 0.25 ppm (from canola, seeds at 0.25 ppm); canola, meal at 0.5 ppm; subgroup 20C Cottonseed subgroup at 0.2 ppm (from cotton, seed at 0.2 ppm); cotton, hulls at 0.4 ppm; cotton, gin byproducts at 8 ppm; cotton, aspirated grain fractions at 4.6 ppm; wheat, grain at 0.07 ppm; wheat, forage at 0.8 ppm; wheat, hay at 1.1 ppm; wheat, straw at 2 ppm; barley, grain at 0.15 ppm; barley hay at 0.8 ppm; barley straw at 1.5 ppm; barley malt sprouts at 0.2 ppm; soybean, seed at 0.2 ppm; soybean hay at 1.8 ppm; soybean, forage at 1.9 ppm; soybean hulls at 0.3 ppm; soybean, meal, toasted at 0.3 ppm; soybean, aspirated grain fractions at 18

ppm. Tolerances of unchanged parent, XDE–208 are also proposed for milk at 0.08 ppm; fat of cattle, goat, horse and sheep at 0.04 ppm; kidney of cattle, goat, horse and sheep at 0.2 ppm; meat of cattle, goat, horse and sheep at 0.1 ppm; meat byproducts of cattle, goat, horse and sheep at 0.25 ppm; fat and meat of hog at 0.01 ppm; meat byproducts of hog at 0.04 ppm; egg at 0.01 ppm; fat and meat of poultry at 0.01 ppm; meat byproduct of poultry at 0.03 ppm. That document referenced a summary of the petition prepared by DOW AgroSciences LLC, the registrant, which is available in the docket, *http://www.regulations.gov.* Comments were received on the notice of filing. EPA's response to these comments is discussed in Unit IV.C.

Based upon review of the data supporting the petition, EPA has increased the proposed tolerances of almond, hulls to 6.0 ppm; barley, grain to 0.4 ppm; barley, hay to 1.0 ppm; barley, straw to 2.0 ppm; beet, sugar, molasses to 0.25 ppm; berry, low growing, subgroup 13–07G to 0.7 ppm; citrus, dried pulp to 3.60 ppm; fruit, citrus, group 10–10 to 0.7 ppm; fruit, pome, group 11–10 to 0.5 ppm; fruit, small, vine climbing, subgroup 13–07F, except fuzzy kiwi fruit to 2.0 ppm; fruit, stone, group 12 to 3.0 ppm; grape, raisin to 6.0 ppm; leafy greens, subgroup 4A to 6.0 ppm; leafy petiole, subgroup 4B to 2.0 ppm; onion, green, subgroup 3–07B to 0.7 ppm; tomato, paste 2.6 ppm; tomato, puree to 1.2 ppm; vegetable, *brassica,* leafy, group 5, except cauliflower to 2.0 ppm; vegetable, cucurbit, group 9 to 0.4 ppm; vegetable, root and tuber, group 1 to 0.05 ppm; wheat, grain to 0.08 ppm; wheat, forage to 1.0 ppm; wheat, hay to 1.5 ppm; cattle, meat to 0.15 ppm; cattle, fat to 0.1 ppm; cattle, meat byproducts to 0.4 ppm; milk to 0.15 ppm; goat, meat to 0.15 ppm; goat, fat to 0.1 ppm; goat, meat byproducts to 0.4 ppm; horse, meat to 0.15 ppm; horse, fat to 0.1 ppm; horse, meat byproducts to 0.4 ppm; sheep, meat to 0.15 ppm; sheep, fat to 0.1 ppm; and sheep, meat byproducts to 0.4 ppm. EPA has decreased the proposed tolerances of bean, dry seed to 0.2 ppm; bean, succulent to 4.0 ppm; cotton, hulls to 0.35 ppm; cotton, gin byproducts to 6.0 ppm; nuts, tree, group 14 to 0.015 ppm; pistachio to 0.015 ppm; vegetable, fruiting, group 10 to 0.7 ppm; vegetable, leaves of root and tuber, group 2 to 3.0 ppm; hog, meat byproducts to 0.1 ppm; and poultry, meat byproducts to 0.1 ppm. EPA has added the following tolerances: beet, sugar, dried pulp at 0.07 ppm; grain, aspirated fractions at 20.0 ppm; vegetable, legume, foliage, group 7 at 3.0 ppm; and watercress at 6.0 ppm. EPA has not established a tolerance for an individual commodity if that commodity is included in a crop group tolerance. The reasons for these changes are explained in Unit IV.D.

III. Aggregate Risk Assessment and Determination of Safety

Section 408(b)(2)(A)(i) of FFDCA allows EPA to establish a tolerance (the legal limit for a pesticide chemical residue in or on a food) only if EPA determines that the tolerance is ''safe.'' Section 408(b)(2)(A)(ii) of FFDCA defines ''safe'' to mean that ''there is a reasonable certainty that no harm will result from aggregate exposure to the pesticide chemical residue, including all anticipated dietary exposures and all other exposures for which there is reliable information.'' This includes exposure through drinking water and in residential settings, but does not include occupational exposure. Section 408(b)(2)(C) of FFDCA requires EPA to give special consideration to exposure of infants and children to the pesticide chemical residue in establishing a tolerance and to ''ensure that there is a reasonable certainty that no harm will result to infants and children from aggregate exposure to the pesticide chemical residue. . . .''

Consistent with FFDCA section 408(b)(2)(D), and the factors specified in FFDCA section 408(b)(2)(D), EPA has reviewed the available scientific data and other relevant information in support of this action. EPA has sufficient data to assess the hazards of and to make a determination on aggregate exposure for sulfoxaflor including exposure resulting from the tolerances established by this action. EPA's assessment of exposures and risks associated with sulfoxaflor follows.

A. Toxicological Profile

EPA has evaluated the available toxicity data and considered its validity, completeness, and reliability as well as the relationship of the results of the studies to human risk. EPA has also considered available information concerning the variability of the sensitivities of major identifiable subgroups of consumers, including infants and children.

Sulfoxaflor is the first member of a new class of insecticides, the sulfoximines, and is a highly efficacious activator of the nicotinic acetylcholine receptor (nAChR) in insects. Toxicity and mechanistic studies in rats, rabbits, dogs and mice indicate that sulfoxaflor is an activator of the mammalian nAChR as well, but to a much lesser degree and in a species-specific manner. The database of guideline toxicity studies indicates that the nervous system and liver are the target organ systems, resulting in developmental toxicity, hepatotoxicity, and other apical effects.

Developmental/offspring toxicity, manifested as skeletal abnormalities and neonatal deaths, was observed in rats only. The skeletal abnormalities, including forelimb flexure, bent clavicles, and hindlimb rotation, likely resulted from skeletal muscle contraction due to activation of the skeletal muscle nAChR *in utero.* Contraction of the diaphragm, also related to skeletal muscle nAChR activation, prevented normal breathing in neonates and resulted in increased mortality in the reproduction studies. Furthermore, targeted studies indicate that offspring effects are dependent upon *in utero* exposure to sulfoxaflor. The skeletal abnormalities were observed at high doses in the developmental and reproduction studies while decreased neonatal survival was observed at slightly lower levels (e.g., mid- and high-dose animals).

Exposure to sulfoxaflor and its major metabolites resulted in hepatotoxicity in several guideline studies. For example, sulfoxaflor caused liver weight and enzyme changes, hypertrophy, proliferation, and tumors in subchronic and chronic studies. Short-term studies with metabolites resulted in similar liver effects. For sulfoxaflor, hepatoxicity occurred at lower doses in long-term studies compared to short-term studies.

In addition to the developmental and hepatic effects, treatment with sulfoxaflor resulted in decreased food consumption and body weight as well as changes in the male reproductive system. Decreased body weight, body weight changes, and food consumption were observed during the first few days of several oral studies at the mid- and high-dose levels. As a result of decreased feeding early in the studies, body weights were typically lower in the mid- and high-dose groups compared to the controls, although the differences were not generally statistically significant. Decreased palatability is a likely contributor to this effect as body weight decreases were often observed at study initiation but were comparable to control animals within several weeks.

Effects in the male reproductive organs were observed in the chronic/carcinogenicity study in rats that included increased testicular and epididymal weights, atrophy of seminiferous tubules, and decreased

secretory material in the coagulating glands, prostate, and seminal vesicles. Additionally, there was an increased incidence of interstitial cell (Leydig cell) tumors. The Leydig cell tumors observed after exposure to sulfoxaflor are not considered treatment related due to the lack of dose response, the lack of statistical significance for the combined tumors (unilateral and bilateral), and the high background rates for this tumor type in F344 rats. The primary effects on male reproductive organs are considered secondary to the loss of normal testicular function due to the size of the interstitial cell (Leydig Cell) adenomas. Consequently, the secondary effects to the male reproductive organs are also not considered treatment related.

Clinical indications of neurotoxicity were only observed at high doses in the acute neurotoxicity study in rats. At the highest dose tested, muscle tremors and twitches, convulsions, hindlimb splaying, increased lacrimation and salivation, decreased pupil size and response to touch, gait abnormalities and decreased rectal temperature were observed. Decreased motor activity was also observed in the mid- and high-dose groups. Since the neurotoxicity was observed only at a very high dose and many of the effects are not consistent with the perturbation of the nicotinic receptor system (e.g., salivation, lacrimation, and pupil response), it is unlikely that these effects are due to activation of the nAChR.

Finally, tumors were observed in chronic rat and mouse studies. In rats, significant increases in the incidence of hepatocellular adenomas and combined adenomas and/or carcinomas in the high-dose males were observed when compared to controls. In mice, there were significant increases in hepatocellular adenomas, carcinomas, and combined adenomas and/or carcinomas in high dose males when compared to controls. In female mice, there was an increase in the incidences of carcinomas at the high dose. Although this increase did not reach statistical significance, the incidences exceeded the historical control range for this tumor type was corroborated with the presence of non-neoplastic lesions at this dose. EPA determined that the liver tumors in mice were treatment-related. Using data from several mechanistic studies, EPA also determined that the liver effects in mice and rats are non-linear (threshold) in their mode of action (MoA) and the MoA for the liver tumors is consistent with a constitutive androstane receptor (CAR) mediated, mitogenic mode-of-action. Leydig cell tumors were also observed in the high-dose group of male rates, but it was determined that the tumors were not related to treatment. There was also a significant increase in the incidence of preputial gland tumors in male rats in the high-dose group. Marginal increases were also observed in the low- and mid-dose groups; however, the incident values for these groups were within the range of historical control values. Given that the liver tumors are produced by a non-linear mechanism, the Leydig cell tumors were not treatment-related, and the preputial gland tumors only occurred at the high dose in one sex of one species, EPA concluded that the evidence of potential carcinogenicity was weak and that that quantification of risk using a non-linear approach (i.e., reference dose (RfD) will adequately account for all chronic toxicity, including any potential carcinogenic effects, that could result from exposure to sulfoxaflor. The current NOAEL of 5.13 mg/kg/day used for chronic dietary risk assessment is significantly (4x) lower than the dose where tumors were observed ≥ 21.3 mg/kg/day.

In addition, EPA determined there was sufficient evidence to support a developmental mode-of-action (i.e., activation of the nAChR) accounting for the skeletal abnormalities and increased mortality observed in the rat. Furthermore, there was sufficient evidence to support that rats are uniquely sensitive to these developmental effects, informing interspecies uncertainty. Although the database indicates that the developmental effects are unlikely to be relevant to humans, the effects will be considered as relevant to humans unless additional information to the contrary is provided. Data are sufficient to support reducing the interspecies uncertainty factor to 3X for the developmental effects.

Specific information on the studies received and the nature of the adverse effects caused by sulfoxaflor as well as the no-observed-adverse-effect-level (NOAEL) and the lowest-observed-adverse-effect-level (LOAEL) from the toxicity studies can be found at *http://www.regulations.gov* in document ''Sulfoxaflor—New Active Ingredient Human Health Risk Assessment of Uses on Numerous Crops'' at pages 14–31 in docket ID number EPA–HQ–OPP–2010–0889.

B. Toxicological Points of Departure/Levels of Concern

Once a pesticide's toxicological profile is determined, EPA identifies toxicological points of departure (POD) and levels of concern to use in evaluating the risk posed by human exposure to the pesticide. For hazards that have a threshold below which there is no appreciable risk, the toxicological POD is used as the basis for derivation of reference values for risk assessment. PODs are developed based on a careful analysis of the doses in each toxicological study to determine the dose at which no adverse effects are observed (the NOAEL) and the lowest dose at which adverse effects of concern are identified (the LOAEL). Uncertainty/safety factors are used in conjunction with the POD to calculate a safe exposure level—generally referred to as a population-adjusted dose (PAD) or a reference dose (RfD)—and a safe margin of exposure (MOE). For non-threshold risks, the Agency assumes that any amount of exposure will lead to some degree of risk. Thus, the Agency estimates risk in terms of the probability of an occurrence of the adverse effect expected in a lifetime. For more information on the general principles EPA uses in risk characterization and a complete description of the risk assessment process, see *http://www.epa.gov/pesticides/factsheets/riskassess.htm.* A summary of the toxicological endpoints for sulfoxaflor used for human risk assessment is shown in Table 1 of this unit.

TABLE 1—SUMMARY OF TOXICOLOGICAL DOSES AND ENDPOINTS FOR SULFOXAFLOR FOR USE IN HUMAN HEALTH RISK ASSESSMENT

Exposure/scenario	Point of departure and uncertainty/safety factors	RfD, PAD, LOC for Risk assessment	Study and toxicological effects
Acute dietary (Females 13–50 years of age).	NOAEL = 1.8 mg/kg/day. UF_A = 3x UF_H = 10x FQPA SF = 1x	Acute RfD = 0.06 mg/kg/day. aPAD = 0.06 mg/kg/day	Developmental Neurotoxicity Study LOAEL = 7.1 mg/kg/day based on decreased neonatal survival (PND 0–4).
Acute dietary (General population including infants and children).	NOAEL = 25 mg/kg/day. UF_A = 10x UF_H = 10x FQPA SF = 1x	Acute RfD = 0.25 mg/kg/day. aPAD = 0.25 mg/kg/day	Acute Neurotoxicity Study LOAEL = 75 mg/kg/day based on decreased motor activity.
Chronic dietary (All populations)	NOAEL= 5.13 mg/kg/day. UF_A = 10x UF_H = 10x FQPA SF = 1x	Chronic RfD = 0.05 mg/kg/day. cPAD = 0.05 mg/kg/day	Chronic/Carcinogenicity Study- Rat LOAEL = 21.3 mg/kg/day based on liver effects including increase blood cholesterol, liver weight, hypertrophy, fatty change, single cell necrosis and macrophages.
Dermal short-term (1 to 30 days) and intermediate-term (1 to 6 months).	Dermal (or oral) study NOAEL = 1.8 mg/kg/day (dermal absorption rate = 2.4%. UF_A = 3x UF_H = 10x	LOC for MOE = 30 ..	Developmental Neurotoxicity Study LOAEL = 7.1 mg/kg/day based on decreased neonatal survival (PND 0–4).
Inhalation short-term (1 to 30 days) and intermediate-term (1 to 6 months).	Inhalation (or oral) study NOAEL= 1.8 mg/kg/day (inhalation absorption rate = 100%). UF_A = 3x UF_H = 10x	LOC for MOE = 30 ..	Developmental Neurotoxicity Study LOAEL = 7.1 mg/kg/day based on decreased neonatal survival (PND 0–4).
Cancer (Oral, dermal, inhalation).	Quantification of risk using a non-linear approach (i.e. reference dose (RfD) will adequately account for all chronic toxicity, including carcinogenicity, that could result from exposure to sulfoxaflor.		

FQPA SF = Food Quality Protection Act Safety Factor. LOAEL = lowest-observed-adverse-effect-level. LOC = level of concern. mg/kg/day = milligram/kilogram/day. MOE = margin of exposure. NOAEL = no-observed-adverse-effect-level. PAD = population adjusted dose (a = acute, c = chronic). RfD = reference dose. UF = uncertainty factor. UF_A = extrapolation from animal to human (interspecies). UF_H = potential variation in sensitivity among members of the human population (intraspecies).

C. Exposure Assessment

1. *Dietary exposure from food and feed uses.* In evaluating dietary exposure to sulfoxaflor, EPA considered exposure under the petitioned-for tolerances. EPA assessed dietary exposures from sulfoxaflor in food as follows:

i. *Acute exposure.* Quantitative acute dietary exposure and risk assessments are performed for a food-use pesticide, if a toxicological study has indicated the possibility of an effect of concern occurring as a result of a 1-day or single exposure. Such effects were identified for sulfoxaflor. In estimating acute dietary exposure, EPA used food consumption information from the United States Department of Agriculture (USDA) 1994–1996 and 1998 Nationwide Continuing Surveys of Food Intake by Individuals (CSFII). As to residue levels in food, EPA used maximum residue values from field trials rather than tolerance-level residue estimates. For crop groups, the residue values were translated from representative crops to the other crops in the group. For processed commodities, empirical processing factors were used for all commodities unless an empirical factor was not available, in which case the DEEM default estimate was used. Residue estimates for livestock were derived using maximum observed residues in the cattle and hen feeding studies. EPA has assumed 100% of crops covered by the registration request are treated with sulfoxaflor.

ii. *Chronic exposure.* In conducting the chronic dietary exposure assessment EPA used the food consumption data from the USDA 1994–1996 and 1998 CSFII. As to residue levels in food, EPA has made the same refinements as those described for the acute exposure assessment, with two exceptions: (1) Average residue levels from crop field trials were used rather than maximum values and (2) average residues from feeding studies, rather than maximum values, were used to derive residue estimates for livestock commodities. EPA has assumed 100% of crops covered by the registration request are treated with sulfoxaflor.

iii. *Cancer.* EPA determines whether quantitative cancer exposure and risk assessments are appropriate for a food-use pesticide based on the weight of the evidence from cancer studies and other relevant data. Cancer risk is quantified using a linear or nonlinear approach. If sufficient information on the carcinogenic mode of action is available, a threshold or nonlinear approach is used and a cancer RfD is calculated based on an earlier noncancer key event. If carcinogenic mode of action data is not available, or if the mode of action data determines a mutagenic mode of action, a default linear cancer slope factor approach is utilized. Based on the data summarized in Unit III.A., EPA has concluded that a nonlinear RfD approach is appropriate for assessing cancer risk to sulfoxaflor. Cancer risk

was assessed using the same exposure estimates as discussed in Unit III.C.1.ii., *chronic exposure.*

iv. *Anticipated residue and percent crop treated (PCT) information.* EPA did not use PCT information in the dietary assessment for sulfoxaflor. One hundred percent CT was assumed for all food commodities. Maximum residue levels from field trials were used for the acute exposure assessment while average residue levels from field trials were used for the chronic exposure assessment. Section 408(b)(2)(E) of FFDCA authorizes EPA to use available data and information on the anticipated residue levels of pesticide residues in food and the actual levels of pesticide residues that have been measured in food. If EPA relies on such information, EPA must require pursuant to FFDCA section 408(f)(1) that data be provided 5 years after the tolerance is established, modified, or left in effect, demonstrating that the levels in food are not above the levels anticipated. For the present action, EPA will issue such data call-ins as are required by FFDCA section 408(b)(2)(E) and authorized under FFDCA section 408(f)(1). Data will be required to be submitted no later than 5 years from the date of issuance of these tolerances.

2. *Dietary exposure from drinking water.* The Agency used screening level water exposure models in the dietary exposure analysis and risk assessment for sulfoxaflor in drinking water. These simulation models take into account data on the physical, chemical, and fate/transport characteristics of sulfoxaflor. Further information regarding EPA drinking water models used in pesticide exposure assessment can be found at *http://www.epa.gov/oppefed1/models/water/index.htm.*

Two scenarios were modeled, use of sulfoxaflor on non-aquatic row and orchard crops and use of sulfoxaflor on watercress. For the non-aquatic crop scenario, based on the Pesticide Root Zone Model/Exposure Analysis Modeling System (PRZM/EXAMS) and Screening Concentration in Ground Water (SCI–GROW) models, the estimated drinking water concentrations (EDWCs) of sulfoxaflor for acute exposures are estimated to be 26.4 parts per billion (ppb) for surface water and 69.2 ppb for ground water. For chronic exposures for non-cancer assessments, EDWCs are estimated to be 13.5 ppb for surface water and 69.2 ppb for ground water. For chronic exposures for cancer assessments, EDWCs are estimated to be 9.3 ppb for surface water and 69.2 ppb for ground water.

For the watercress scenario, based on the Tier I Rice Model, the estimated drinking water concentrations (EDWCs) of sulfoxaflor for surface water are estimated to be 91.3 parts per billion (ppb) after one application, 182.5 parts per billion (ppb) after two applications, and 273.8 parts per billion (ppb) after three applications. The 2007 census of agriculture estimates that approximately 680 acres of the U.S. are used for watercress production; thus, this use represents a very small fraction of the potential crop acreage that may be treated with sulfoxaflor. Moreover, the inputs to the Tier 1 rice model are quite conservative, especially with regard to application efficiency (the model assumes that there is no interception of the applied material by the watercress plants) and the 10-cm water column at the time of application (information from watercress growers indicates that watercress fields are drained prior to pesticide applications). Finally, the rice model predicts pesticide concentrations in water in the field and not drinking water *per se* where concentrations are expected to be lower due to dissipation processes such as degradation, stream flow, and dilution. While the use on watercress may theoretically impact drinking water for a few individuals, EPA does not believe that the EDWCs and residue profiles associated with the watercress use give a representative depiction of the potential exposure profile for any major identifiable subgroup of consumers within the U.S.

EPA has assessed dietary exposure using the EDWCs from both the non-aquatic uses and the watercress use. Dietary risk estimates using both sets of EDWCs are below the Agency's level of concern. For risk characterization purposes, EPA is focusing on the non-aquatic-crop EDWCs because they are more representative of the expected exposure profile for the majority of the population. Furthermore, EPA adjusted the water concentration values to take into account the source of the water (surface water vs. groundwater); the relative amounts of parent sulfoxaflor, X11719474, and X11519540; and the relative liver toxicity of the metabolites as compared to the parent compound (0.3X and 10X for X11719474 and X11519540, respectively). A full discussion of the approach used by EPA is available in Volume 77, No. 189 of the **Federal Register** (77 FR 59561, September 28, 2012). In summary, the three adjusted EDWCs are as follows:

For acute dietary risk assessment of the general population, the groundwater EDWC is greater than the surface water EDWC and was used in the assessment. The residue profile in groundwater is 60.9 ppb X11719474 and 8.3 ppb X11519540 (totaling 69.2 ppb). Parent sulfoxaflor is not expected to occur in groundwater. For this assessment, the regulatory toxicological endpoint is based on neurotoxicity. There is no information to relate the neurotoxicity of the metabolites to that of sulfoxaflor; therefore, no toxicity adjustment was made to the EDWC.

For acute dietary risk assessment of females 13–49, the regulatory endpoint is attributable only to the parent compound (as previously discussed); therefore, the surface water EDWC is the most appropriate EDWC for this assessment even though it is of a lower value than the groundwater EDWC, which reflects metabolites only. The EDWC of 9.4 ppb was used and no toxicological adjustment was made.

For chronic dietary risk assessment, the toxicological endpoint is liver effects, for which it is possible to account for the relative toxicities of X11719474 and X11519540 as compared to sulfoxaflor. The groundwater EDWC is greater than the surface water EDWC. The residue profile in groundwater consists of 60.9 ppb X11719474 and 8.3 ppb X11519540. Adjusting for the relative toxicity results in 18.3 ppb equivalents of X11719474 and 83 ppb X11519540 (totaling 101.3 ppb). The adjusted groundwater EDCW is greater than the surface water EDWC (9.3 ppb) and was, therefore, used to assess the chronic dietary exposure scenario.

3. *From non-dietary exposure.* The term ''residential exposure'' is used in this document to refer to non-occupational, non-dietary exposure (e.g., for lawn and garden pest control, indoor pest control, termiticides, and flea and tick control on pets). Sulfoxaflor is not registered for any specific use patterns that would result in residential exposure.

4. *Cumulative effects from substances with a common mechanism of toxicity.* Section 408(b)(2)(D)(v) of FFDCA requires that, when considering whether to establish, modify, or revoke a tolerance, the Agency consider ''available information'' concerning the cumulative effects of a particular pesticide's residues and ''other substances that have a common mechanism of toxicity.'' EPA has not found sulfoxaflor to share a common mechanism of toxicity with any other substances, and sulfoxaflor does not appear to produce a toxic metabolite produced by other substances. For the purposes of this tolerance action, therefore, EPA has assumed that sulfoxaflor does not have a common mechanism of toxicity with other substances. For information regarding EPA's efforts to determine which chemicals have a common mechanism

of toxicity and to evaluate the cumulative effects of such chemicals, see EPA's Web site at *http://www.epa.gov/pesticides/cumulative.*

D. Safety Factor for Infants and Children

1. *In general.* Section 408(b)(2)(C) of FFDCA provides that EPA shall apply an additional tenfold (10X) margin of safety for infants and children in the case of threshold effects to account for prenatal and postnatal toxicity and the completeness of the database on toxicity and exposure unless EPA determines based on reliable data that a different margin of safety will be safe for infants and children. This additional margin of safety is commonly referred to as the FQPA Safety Factor (SF). In applying this provision, EPA either retains the default value of 10X, or uses a different additional safety factor when reliable data available to EPA support the choice of a different factor.

2. *Prenatal and postnatal sensitivity.* Although there was quantitative susceptibility observed in the developmental neurotoxicity (DNT) study, there is no residual uncertainty because the effects are well characterized, a clear NOAEL was identified, and the endpoints chosen for risk assessment are protective of potential *in utero* and developmental effects. Quantitative susceptibility in the DNT was based on an increased rate of neonatal deaths at a dose where no maternal toxicity was observed. However, the apparent enhanced sensitivity may be due to the limited number of evaluations conducted in dams in the study rather than a true sensitivity of the young. Qualitative susceptibility was observed in the 2-generation reproduction study since neonatal deaths were observed at the same dose that resulted in hepatotoxicity in parental animals. However, these effects occurred at a higher dose compared to the offspring effects observed in the DNT. Finally, there was no evidence of quantitative or qualitative susceptibility in the developmental studies in the rat or rabbit.

As described in *Section A. Toxicological Profile,* the Agency considers the rat to be uniquely sensitive to these developmental effects. There is sufficient evidence indicating that neonatal death in rats occurs as a result of sulfoxaflor binding to the fetal receptor. Sulfoxaflor does not bind the human fetal receptor in similar manner, precluding developmental effects in humans by this mechanism of toxicity.

3. *Conclusion.* EPA has determined that reliable data show the safety of infants and children would be adequately protected if the FQPA SF were reduced to 1X. That decision is based on the following findings:

i. The toxicity database for sulfoxaflor is complete.

ii. The level of concern for neurotoxicity is low because the effects are well characterized, the dose-response curve for these effects is well characterized, and clear NOAELs have been identified.

iii. Although there is evidence of quantitative susceptibility in the DNT study, based on decreased survival of offspring up to postnatal day 4, the endpoints and doses selected for risk assessment are protective for these effects; further, EPA's degree of concern for human susceptibility is reduced based on the special studies submitted in support of the mode of action.

iv. There are no residual uncertainties identified in the exposure databases. The dietary food exposure assessments were performed based on 100% CT and either maximum or average residue levels from field trials. EPA made conservative (protective) assumptions in the ground and surface water modeling used to assess exposure to sulfoxaflor in drinking water. Although some refinements were used in the exposure assessment, the dietary and drinking water assessments will still result in the upper-bound estimates of exposure (see Unit III.C.2).

E. Aggregate Risks and Determination of Safety

EPA determines whether acute and chronic dietary pesticide exposures are safe by comparing aggregate exposure estimates to the acute PAD (aPAD) and chronic PAD (cPAD). For linear cancer risks, EPA calculates the lifetime probability of acquiring cancer given the estimated aggregate exposure. Short-, intermediate-, and chronic-term risks are evaluated by comparing the estimated aggregate food, water, and residential exposure to the appropriate PODs to ensure that an adequate MOE exists.

1. *Acute risk.* Using the exposure assumptions discussed in this unit for acute exposure, the acute dietary exposure from food and water to sulfoxaflor will occupy 16% of the aPAD for children 1–2 years old and females 13–49 years old, the population groups receiving the greatest exposure.

2. *Chronic risk.* Using the exposure assumptions described in this unit for chronic exposure, EPA has concluded that chronic exposure to sulfoxaflor from food and water will utilize 18% of the cPAD for infants, the population group receiving the greatest exposure. There are no residential uses for sulfoxaflor.

3. *Short-term risk.* Short-term aggregate exposure takes into account short-term residential exposure plus chronic exposure to food and water (considered to be a background exposure level). A short-term adverse effect was identified; however, sulfoxaflor is not registered for any use patterns that would result in short-term residential exposure. Short-term risk is assessed based on short-term residential exposure plus chronic dietary exposure. Because there is no short-term residential exposure and chronic dietary exposure has already been assessed under the appropriately protective cPAD (which is at least as protective as the POD used to assess short-term risk), no further assessment of short-term risk is necessary, and EPA relies on the chronic dietary risk assessment for evaluating short-term risk for sulfoxaflor.

4. *Intermediate-term risk.* Intermediate-term aggregate exposure takes into account intermediate-term residential exposure plus chronic exposure to food and water (considered to be a background exposure level). An intermediate-term adverse effect was identified; however, sulfoxaflor is not registered for any use patterns that would result in intermediate-term residential exposure. Intermediate-term risk is assessed based on intermediate-term residential exposure plus chronic dietary exposure. Because there is no intermediate-term residential exposure and chronic dietary exposure has already been assessed under the appropriately protective cPAD (which is at least as protective as the POD used to assess intermediate-term risk), no further assessment of intermediate-term risk is necessary, and EPA relies on the chronic dietary risk assessment for evaluating intermediate-term risk for sulfoxaflor.

5. *Aggregate cancer risk for U.S. population.* As described in Unit III.A, EPA has concluded that assessments using a non-linear approach (e.g., a chronic RfD-based assessment) will adequately account for all chronic toxicity, including carcinogenicity that could result from exposure to sulfoxaflor. Chronic dietary risk estimates are below EPA's level of concern; therefore, cancer risk is also below EPA's level of concern.

6. *Determination of safety.* Based on these risk assessments, EPA concludes that there is a reasonable certainty that no harm will result to the general population, or to infants and children from aggregate exposure to sulfoxaflor residues.

IV. Other Considerations

A. Analytical Enforcement Methodology

Adequate enforcement methodology is available to enforce the tolerance expression. High performance liquid chromatographic (HPLC) methods with positive-ion electro spray (ESI) tandem mass spectrometry (LC/MS/MS) were developed for data collection and enforcement of sulfoxaflor residues and the two metabolites X11719474 and X11721061. Method 091116 was developed for plant commodities, and Method 091188 was developed for livestock commodities. FDA multiresidue methods are not suitable for analysis of sulfoxaflor; however, data were provided which indicate that the DFG S–19 multiresidue method may provide satisfactory results. The analytical enforcement methodology may be requested from: Chief, Analytical Chemistry Branch, Environmental Science Center, 701 Mapes Rd., Ft. Meade, MD 20755–5350; telephone number: (410) 305–2905; email address: *residuemethods@epa.gov.*

B. International Residue Limits

In making its tolerance decisions, EPA seeks to harmonize U.S. tolerances with international standards whenever possible, consistent with U.S. food safety standards and agricultural practices. EPA considers the international maximum residue limits (MRLs) established by the Codex Alimentarius Commission (Codex), as required by FFDCA section 408(b)(4). The Codex Alimentarius is a joint United Nations Food and Agriculture Organization/World Health Organization food standards program, and it is recognized as an international food safety standards-setting organization in trade agreements to which the United States is a party. EPA may establish a tolerance that is different from a Codex MRL; however, FFDCA section 408(b)(4) requires that EPA explain the reasons for departing from the Codex level. The Codex has not established any MRLs for sulfoxaflor.

C. Response to Comments

Two comments were received by email on the notice of filing. One commenter asked for clarification on the proposed tolerance for Subgroup 5B *Brassica* Leafy Vegetables. EPA contacted the registrant and confirmed that the proposed tolerance for this subgroup is 1.6 ppm. The second commenter asked for clarification on the proposed tolerances for Crop Group 1, specifically questioning the discrepancy in proposed tolerances between radish roots and carrot and beets, sugar roots. EPA responded that the tolerances listed in the company's notice of filing are only proposed and not necessarily what the Agency will grant. To cover these commodities, EPA is granting a single tolerance of 0.05 ppm for vegetable, root and tuber, group 1. The comments and EPA responses can be found in the docket.

D. Revisions to Petitioned-For Tolerances

Many of the tolerance levels proposed by the registrant are different from those being established by the EPA. The reason for these differences is that the registrant determined the proposed tolerances using the North American Free-Trade Agreement tolerance calculator rather than using the Organization for Economic Co-operation and Development (OECD) calculation procedures. In order to maximize global regulatory harmonization, it became EPA policy in April 2011, which was after receipt of the sulfoxaflor submission, to use the OECD calculation procedures to derive tolerance levels. In addition, the registrant proposed tolerances for some crops as both an individual crop and as members of a crop group. EPA has not established a tolerance for an individual commodity if that commodity is included in a crop group tolerance. EPA is not establishing tolerances for cattle, sheep, goat, and horse kidney as proposed, as kidneys are covered under the requested meat byproducts tolerances. Nor is EPA establishing a tolerance for residues in plum, prune, dried as residue levels is adequately addressed by the tolerance listing for the stone fruit crop group raw agricultural commodity. EPA is establishing four tolerances which were not proposed by the petitioner:

Beet, sugar, dried pulp at 0.07 ppm due to the potential for concentration of residues upon production of the dried pulp commodity. The petitioner's evaluation indicates that it did not think a separate tolerance would be necessary but EPA's analysis of the data shows otherwise;

Grain, aspirated fractions at 20 ppm to cover residues in this feed item. The tolerance is necessary to support uses on barley and wheat but a tolerance was not requested, apparently an oversight by the petitioner;

Watercress at 6.0 ppm. The petitioner requested this use but did not provide a requested tolerance level; and

Crop Group 7 (Vegetables, legume, foliage) at 7.0 ppm. The tolerance is necessary to support uses on Crop Group 6 (legume vegetables) but the petitioner only requested tolerances for several individual commodities in Crop Group 7, apparently as an oversight. See Unit II. for specific revisions.

V. Conclusion

Therefore, tolerances are established for residues of sulfoxaflor, 1-(6-trifluoromethylpyridin-3-yl)ethyl](methyl)-oxido-λ^6-sulfanylidenecyanamide, as indicated in Unit II.

VI. Statutory and Executive Order Reviews

This final rule establishes tolerances under FFDCA section 408(d) in response to a petition submitted to the Agency. The Office of Management and Budget (OMB) has exempted these types of actions from review under Executive Order 12866, entitled ''Regulatory Planning and Review'' (58 FR 51735, October 4, 1993). Because this final rule has been exempted from review under Executive Order 12866, this final rule is not subject to Executive Order 13211, entitled ''Actions Concerning Regulations That Significantly Affect Energy Supply, Distribution, or Use'' (66 FR 28355, May 22, 2001) or Executive Order 13045, entitled ''Protection of Children from Environmental Health Risks and Safety Risks'' (62 FR 19885, April 23, 1997). This final rule does not contain any information collections subject to OMB approval under the Paperwork Reduction Act (PRA) (44 U.S.C. 3501 *et seq.*), nor does it require any special considerations under Executive Order 12898, entitled ''Federal Actions to Address Environmental Justice in Minority Populations and Low-Income Populations'' (59 FR 7629, February 16, 1994).

Since tolerances and exemptions that are established on the basis of a petition under FFDCA section 408(d), such as the tolerance in this final rule, do not require the issuance of a proposed rule, the requirements of the Regulatory Flexibility Act (RFA) (5 U.S.C. 601 *et seq.*), do not apply.

This final rule directly regulates growers, food processors, food handlers, and food retailers, not States or tribes, nor does this action alter the relationships or distribution of power and responsibilities established by Congress in the preemption provisions of FFDCA section 408(n)(4). As such, the Agency has determined that this action will not have a substantial direct effect on States or tribal governments, on the relationship between the national government and the States or tribal governments, or on the distribution of power and responsibilities among the various levels of government or between

the Federal Government and Indian tribes. Thus, the Agency has determined that Executive Order 13132, entitled ''Federalism'' (64 FR 43255, August 10, 1999) and Executive Order 13175, entitled ''Consultation and Coordination with Indian Tribal Governments'' (65 FR 67249, November 9, 2000) do not apply to this final rule. In addition, this final rule does not impose any enforceable duty or contain any unfunded mandate as described under Title II of the Unfunded Mandates Reform Act of 1995 (UMRA) (2 U.S.C. 1501 *et seq.*).

This action does not involve any technical standards that would require Agency consideration of voluntary consensus standards pursuant to section 12(d) of the National Technology Transfer and Advancement Act of 1995 (NTTAA) (15 U.S.C. 272 note).

VII. Congressional Review Act

Pursuant to the Congressional Review Act (5 U.S.C. 801 *et seq.*), EPA will submit a report containing this rule and other required information to the U.S. Senate, the U.S. House of Representatives, and the Comptroller General of the United States prior to publication of the rule in the **Federal Register**. This action is not a ''major rule'' as defined by 5 U.S.C. 804(2).

List of Subjects in 40 CFR Part 180

Environmental protection, Administrative practice and procedure, Agricultural commodities, Pesticides and pests, Reporting and recordkeeping requirements.

Dated: May 6, 2012.

Steven Bradbury,

Director, Office of Pesticide Programs.

Therefore, 40 CFR chapter I is amended as follows:

PART 180—[AMENDED]

■ 1. The authority citation for part 180 continues to read as follows:

Authority: 21 U.S.C. 321(q), 346a and 371.

■ 2. Section 180.670 is added to subpart C to read as follows:

§ 180.670 Sulfoxaflor; tolerances for residues.

(a) *General.* Tolerances are established for residues of the insecticide sulfoxaflor, including its metabolites and degradate, in or on the commodities in the table below. Compliance with the tolerance levels specified below is to be determined by measuring only sulfoxaflor (*N*-[methyloxido[1-[6-(trifluoromethyl)-3-pyridinyl]ethyl]-γ^4-sulfanylidene]cyanamide).

Commodity	Parts per million
Almond, hulls	6.0
Barley, grain	0.40
Barley, hay	1.0
Barley, straw	2.0
Bean, dry seed	0.20
Bean, succulent	4.0
Beet, sugar, dried pulp	0.07
Beet, sugar, molasses	0.25
Berry, low growing, subgroup 13–07G	0.70
Cattle, fat	0.10
Cattle, meat	0.15
Cattle, meat byproducts	0.40
Cauliflower	0.08
Citrus, dried pulp	3.6
Cotton, gin byproducts	6.0
Cotton, hulls	0.35
Cottonseed subgroup 20C	0.20
Fruit, citrus, group 10–10	0.70
Fruit, pome, group 11–10	0.50
Fruit, small, vine climbing, subgroup 13–07F, except fuzzy kiwi fruit	2.0
Fruit, stone, group 12	3.0
Goat, fat	0.10
Goat, meat	0.15
Goat, meat byproducts	0.40
Grain, aspirated fractions	20.0
Grape, raisin	6.0
Hog, fat	0.01
Hog, meat	0.01
Hog, meat byproducts	0.01
Horse, fat	0.10
Horse, meat	0.15
Horse, meat byproducts	0.40
Leafy greens, subgroup 4A	6.0
Leafy petiole, subgroup 4B	2.0
Milk	0.15
Nuts, tree, group 14	0.015
Onion, bulb, subgroup 3–07A	0.01
Onion, green, subgroup 3–07B	0.70
Pistachio	0.015
Poultry, eggs	0.01
Poultry, fat	0.01
Poultry, meat	0.01
Poultry, meat byproducts	0.01
Rapeseed, meal	0.50
Rapeseed subgroup 20A	0.40
Sheep, fat	0.10
Sheep, meat	0.15
Sheep, meat byproducts	0.40
Soybean, seed	0.20
Tomato, paste	2.60
Tomato, puree	1.20
Vegetable, *brassica,* leafy, group 5, except cauliflower	2.0
Vegetable, cucurbit, group 9	0.40
Vegetable, fruiting, group 8–10	0.70
Vegetable, leaves of root and tuber, group 2	3.0
Vegetable, legume, group 7	3.0
Vegetable, root and tuber, group 1	0.05
Watercress	6.0
Wheat, forage	1.0
Wheat, grain	0.08
Wheat, hay	1.5
Wheat, straw	2.0

(b) *Section 18 emergency exemptions.* [Reserved]

(c) *Tolerances with regional registrations.* [Reserved]

(d) *Indirect or inadvertent registrations.* [Reserved]

[FR Doc. 2013–11824 Filed 5–16–13; 8:45 am]

BILLING CODE 6560–50–P

ENVIRONMENTAL PROTECTION AGENCY

40 CFR Part 180

[EPA–HQ–OPP–2011–0852; FRL–9385–3]

Streptomycin; Pesticide Tolerances for Emergency Exemptions

AGENCY: Environmental Protection Agency (EPA).

ACTION: Final rule.

SUMMARY: This regulation establishes time-limited tolerances for residues of streptomycin in or on grapefruit and grapefruit, dried pulp. This action is in response to EPA's granting of an emergency exemption under the Federal Insecticide, Fungicide, and Rodenticide Act (FIFRA) authorizing use of the pesticide on grapefruit. This regulation establishes maximum permissible levels for residues of streptomycin in or on these commodities. The time-limited tolerances expire on December 31, 2015.

DATES: This regulation is effective May 17, 2013. Objections and requests for hearings must be received on or before July 16, 2013 and must be filed in accordance with the instructions provided in 40 CFR part 178 (see also Unit I.C. of the **SUPPLEMENTARY INFORMATION**).

ADDRESSES: The docket for this action, identified by docket identification (ID) number EPA–HQ–OPP–2011–0852, is available at *http://www.regulations.gov* or at the Office of Pesticide Programs Regulatory Public Docket (OPP Docket) in the Environmental Protection Agency Docket Center (EPA/DC), EPA West Bldg., Rm. 3334, 1301 Constitution Ave. NW., Washington, DC 20460–0001. The Public Reading Room is open from 8:30 a.m. to 4:30 p.m., Monday through Friday, excluding legal holidays. The telephone number for the Public Reading Room is (202) 566–1744, and the telephone number for the OPP Docket is (703) 305–5805. Please review the visitor instructions and additional information about the docket available at *http://www.epa.gov/dockets.*

FOR FURTHER INFORMATION CONTACT: Andrea Conrath, Registration Division (7505P), Office of Pesticide Programs, Environmental Protection Agency, 1200 Pennsylvania Ave. NW., Washington, DC 20460–0001; telephone number: (703) 308–9356; email address: *conrath.andrea@epa.gov.*

SUPPLEMENTARY INFORMATION:

I. General Information

A. Does this action apply to me?

You may be potentially affected by this action if you are an agricultural producer, food manufacturer, or pesticide manufacturer. The following list of North American Industrial Classification System (NAICS) codes is not intended to be exhaustive, but rather provides a guide to help readers determine whether this document applies to them. Potentially affected entities may include:

- Crop production (NAICS code 111).
- Animal production (NAICS code 112).
- Food manufacturing (NAICS code 311).
- Pesticide manufacturing (NAICS code 32532).

B. How can I get electronic access to other related information?

You may access a frequently updated electronic version of 40 CFR part 180 through the Government Printing Office's e-CFR site at *http://ecfr.gpoaccess.gov/cgi/t/text/text-idx?&c=ecfr&tpl=/ecfrbrowse/Title40/40tab_02.tpl.*

C. How can I file an objection or hearing request?

Under section 408(g) of the Federal Food, Drug, and Cosmetic Act (FFDCA), 21 U.S.C. 346a, any person may file an objection to any aspect of this regulation and may also request a hearing on those objections. You must file your objection or request a hearing on this regulation in accordance with the instructions provided in 40 CFR part 178. To ensure proper receipt by EPA, you must identify docket ID number EPA–HQ–OPP–2011–0852 in the subject line on the first page of your submission. All objections and requests for a hearing must be in writing, and must be received by the Hearing Clerk on or before July 16, 2013. Addresses for mail and hand delivery of objections and hearing requests are provided in 40 CFR 178.25(b).

In addition to filing an objection or hearing request with the Hearing Clerk as described in 40 CFR part 178, please submit a copy of the filing (excluding any Confidential Business Information (CBI)) for inclusion in the public docket. Information not marked confidential pursuant to 40 CFR part 2 may be disclosed publicly by EPA without prior notice. Submit the non-CBI copy of your objection or hearing request, identified by docket ID number EPA–HQ–OPP–2011–0852, by one of the following methods:

- *Federal eRulemaking Portal: http://www.regulations.gov.* Follow the online instructions for submitting comments. Do not submit electronically any information you consider to be CBI or other information whose disclosure is restricted by statute.
- *Mail:* OPP Docket, Environmental Protection Agency Docket Center (EPA/DC), (28221T), 1200 Pennsylvania Ave. NW., Washington, DC 20460–0001.
- *Hand Delivery:* To make special arrangements for hand delivery or delivery of boxed information, please follow the instructions at *http://www.epa.gov/dockets/contacts.htm.* Additional instructions on commenting or visiting the docket, along with more information about dockets generally, is available at *http://www.epa.gov/dockets.*

II. Background and Statutory Findings

EPA, on its own initiative, in accordance with FFDCA sections 408(e) and 408(l)(6) of, 21 U.S.C. 346a(e) and 346a(1)(6), is establishing time-limited tolerances for residues of streptomycin, 5-(2,4-diguanidino-3,5,6-trihydroxy-cyclohexoxy)-4-[4,5-dihydroxy-6-(hydroxymethyl)-3-methylamino-tetrahydropyran-2-yl] oxy-3-hydroxy-2-methyl-tetrahydrofuran-3-carbaldehyde, in or on grapefruit at 0.15 parts per million (ppm) and dried grapefruit pulp at 0.40 ppm. Streptomycin is an antibiotic of the aminoglycoside class and is produced by the bacteria streptomyces. The active pesticide ingredient, streptomycin sulfate, dissociates in water to streptomycin, but otherwise is relatively stable in crops, animals, and humans. Therefore, compliance with the tolerance levels is determined by measuring the residues of streptomycin only and there are no toxicologically significant metabolites and/or degradates. Streptomycin and streptomycin sulfate are considered equivalent in this document and both are referred to as streptomycin. These time-limited tolerances expire on December 31, 2015.

Section 408(l)(6) of FFDCA requires EPA to establish a time-limited tolerance or exemption from the requirement for a tolerance for pesticide chemical residues in food that will result from the use of a pesticide under an emergency exemption granted by EPA under FIFRA section 18. Such tolerances can be established without providing notice or period for public comment. EPA does not intend for its actions on FIFRA section 18 related time-limited tolerances to set binding precedents for the application of FFDCA section 408 and the safety standard to other tolerances and exemptions.

Section 408(e) of FFDCA allows EPA to establish a tolerance or an exemption from the requirement of a tolerance on its own initiative, i.e., without having received any petition from an outside party.

Section 408(b)(2)(A)(i) of FFDCA allows EPA to establish a tolerance (the legal limit for a pesticide chemical residue in or on a food) only if EPA determines that the tolerance is ''safe.'' Section 408(b)(2)(A)(ii) of FFDCA defines ''safe'' to mean that ''there is a reasonable certainty that no harm will result from aggregate exposure to the pesticide chemical residue, including all anticipated dietary exposures and all other exposures for which there is reliable information.'' This includes exposure through drinking water and in residential settings, but does not include occupational exposure. Section 408(b)(2)(C) of FFDCA requires EPA to give special consideration to exposure of infants and children to the pesticide chemical residue in establishing a tolerance and to ''ensure that there is a reasonable certainty that no harm will result to infants and children from aggregate exposure to the pesticide chemical residue. . . .''

Section 18 of FIFRA authorizes EPA to exempt any Federal or State agency from any provision of FIFRA, if EPA determines that ''emergency conditions exist which require such exemption.'' EPA has established regulations governing such emergency exemptions in 40 CFR part 166.

III. Emergency Exemption for Streptomycin on Grapefruit and FFDCA Tolerances

The Florida Department of Agriculture and Consumer Services (FDACS) requested an emergency exemption for use of streptomycin on up to 54,000 acres of fresh-market grapefruit to combat citrus canker, a disease caused by the bacteria *Xanthomonas citri.* Citrus canker was once limited to localized areas in Florida, but several recent severe hurricane seasons have spread the disease throughout the citrus growing areas and widespread treatment to control the disease throughout the season has become necessary. The FDACS requested a maximum of 2 applications of streptomycin, by ground equipment only, at a rate of 0.448 pounds of active ingredient per acre per application, during the hottest part of the season when the risk of fruit injury from the alternative controls is the greatest. After having reviewed the submission, EPA determined that an emergency condition exists for this State, and that the criteria for approval

of an emergency exemption are met. EPA has authorized a specific exemption under FIFRA section 18 for the use of streptomycin on grapefruit for control of citrus canker in Florida.

As part of its evaluation of the emergency exemption application, EPA assessed the potential risks presented by residues of streptomycin in or on grapefruit. In doing so, EPA considered the safety standard in FFDCA section 408(b)(2), and EPA decided that the necessary tolerance under FFDCA section 408(l)(6) would be consistent with the safety standard and with FIFRA section 18. Consistent with the need to move quickly on the emergency exemption in order to address an urgent non-routine situation and to ensure that the resulting food is safe and lawful, EPA is issuing this tolerance without notice and opportunity for public comment as provided in FFDCA section 408(l)(6). Although these time-limited tolerances expire on December 31, 2015, under FFDCA section 408(l)(5), residues of the pesticide not in excess of the amounts specified in the tolerances remaining in or on grapefruit and grapefruit, dried pulp after that date will not be unlawful, provided the pesticide was applied in a manner that was lawful under FIFRA, and the residues do not exceed a level that was authorized by these time-limited tolerances at the time of that application. EPA will take action to revoke these time-limited tolerances earlier if any experience with, scientific data on, or other relevant information on this pesticide indicate that the residues are not safe.

Because these time-limited tolerances are being approved under emergency conditions, EPA has not made any decisions about whether streptomycin meets FIFRA's registration requirements for use on grapefruit or whether permanent tolerances for this use would be appropriate. Under these circumstances, EPA does not believe that this time-limited tolerance decision serves as a basis for registration of streptomycin by a State for special local needs under FIFRA section 24(c). Nor does this tolerance by itself serve as the authority for persons in any State other than Florida to use this pesticide on the applicable crops under FIFRA section 18 absent the issuance of an emergency exemption applicable within that State. For additional information regarding the emergency exemption for streptomycin, contact the Agency's Registration Division at the address provided under **FOR FURTHER INFORMATION CONTACT**.

IV. Aggregate Risk Assessment and Determination of Safety

Specific information on the studies reviewed and the nature of the adverse effects caused by streptomycin as well as the no-observed-adverse-effect-level (NOAEL) and the lowest-observed-adverse-effect-level (LOAEL) from the toxicity studies can be found at *http://www.regulations.gov,* under docket ID number EPA–HQ–OPP–2011–0852, in the document titled ''Streptomycin sulfate. Section 18 Petition by the Florida Department of Agriculture and Consumer Services for use on Grapefruit.''

Consistent with the factors specified in FFDCA section 408(b)(2)(D), EPA has reviewed the available scientific data and other relevant information in support of this action. EPA has sufficient data to assess the hazards of, and to make a determination on, the aggregate exposures expected as a result of this emergency exemption request and the time-limited tolerances for residues of streptomycin in or on grapefruit at 0.15 ppm, and grapefruit, dried pulp at 0.40 ppm. EPA's assessment of exposures and risks associated with establishing the time-limited tolerances follows.

A. Toxicological Points of Departure/Levels of Concern

Once a pesticide's toxicological profile is determined, EPA identifies toxicological points of departure (POD) and levels of concern to use in evaluating the risk posed by human exposure to the pesticide. For hazards that have a threshold below which there is no appreciable risk, the toxicological POD is used as the basis for derivation of reference values for risk assessment. PODs are developed based on a careful analysis of the doses in each toxicological study to determine the dose at which no adverse effects are observed (the NOAEL) and the lowest dose at which adverse effects of concern are identified (the LOAEL). Uncertainty/safety factors are used in conjunction with the POD to calculate a safe exposure level—generally referred to as a population-adjusted dose (PAD) or a reference dose (RfD)—and a safe margin of exposure (MOE). For non-threshold risks, the Agency assumes that any amount of exposure will lead to some degree of risk. Thus, the Agency estimates non-threshold risk in terms of the probability of an occurrence of the adverse effect during a lifetime. For more information on the general principles EPA uses in risk characterization and a complete description of the risk assessment process, see *http://www.epa.gov/pesticides/factsheets/riskassess.htm.*

A summary of the toxicological endpoints for streptomycin used for human risk assessment is shown in the Table of this unit.

SUMMARY OF TOXICOLOGICAL DOSES AND ENDPOINTS FOR STREPTOMYCIN FOR USE IN HUMAN HEALTH RISK ASSESSMENT

Exposure/scenario	Point of departure and uncertainty/safety factors	RfD, PAD, LOC for risk assessment	Study and toxicological effects
Acute dietary (Any population)	NA	NA	Toxicity from single dose exposure not identified.
Chronic dietary (All populations)	NOAEL= 5 mg/kg/day UF_A = 10 UF_H = 10 FQPA SF = 1X	Chronic RfD = 0.05 mg/kg/day cPAD = 0.05 mg/kg/day	Two-year feeding study in rats. LOAEL = 10 mg/kg/day based on reduced body weight gain.
Cancer	NA—EPA Waived its toxicology data requirements		

FQPA SF = Food Quality Protection Act Safety Factor. LOAEL = lowest-observed-adverse-effect-level. LOC = level of concern. mg/kg/day = milligram/kilogram/day. MOE = margin of exposure. NOAEL = no-observed-adverse-effect-level. PAD = population adjusted dose (a = acute, c = chronic). RfD = reference dose. UF_A = extrapolation from animal to human (interspecies). UF_H = potential variation in sensitivity among members of the human population (intraspecies).

The human risk assessment for this action can be found at *http://www.regulations.gov* in the document ''Streptomycin sulfate. Section 18 Petition by the Florida Department of Agriculture and Consumer Services for Use on Grapefruit'' in the docket for ID number EPA-HQ–OPP–2011–0852.

B. Exposure Assessment

1. *Dietary exposure from food and feed uses.* In evaluating dietary exposure to streptomycin, EPA considered exposure under the time-limited tolerances established by this action as well as all existing streptomycin tolerances in 40 CFR 180.245. EPA assessed dietary exposures from streptomycin in food as follows:

i. *Acute exposure.* No such acute adverse effects were identified in the toxicological studies for streptomycin; therefore, a quantitative acute dietary exposure assessment is unnecessary.

ii. *Chronic exposure.* In conducting the chronic dietary exposure assessment, EPA used food consumption information from the U.S. Department of Agriculture (USDA) 1994–1996 and 1998 Nationwide Continuing Surveys of Food Intake by Individuals (CSFII). As to residue levels in food, EPA used tolerance level residues for all registered commodities, and the proposed tolerance levels of 0.15 ppm for grapefruit and grapefruit juice. In addition, default processing factors were used for all commodities except grapefruit juice. One hundred percent crop treated (PCT) was assumed for all crops.

iii. *Cancer.* No concern for carcinogenicity is expected for streptomycin based on the weight of evidence of available information. Streptomycin has been used for decades as a human drug at doses much higher than those expected from pesticidal uses, without findings of an association with cancer. Based on this information combined with the lack of tumors reported in the 2-year rat study assessed by FDA, and the properties of the molecule (e.g., minimal metabolism and large molecular size restricting interaction of the chemical with typical carcinogenic receptors) EPA has waived its toxicological data requirements for streptomycin. EPA has concluded that streptomycin does not pose a cancer risk to humans and a quantitative data requirements for streptomycin dietary exposure assessment for assessing cancer risk was not conducted.

iv. *Anticipated residue and PCT information.* EPA did not use anticipated residue and/or PCT information in the dietary assessment for streptomycin. Tolerance level residues and 100 PCT were assumed for all food commodities.

2. *Dietary exposure from drinking water.* The Agency used screening level water exposure models in the dietary exposure analysis and risk assessment for streptomycin in drinking water. These simulation models take into account data on the physical, chemical, and fate/transport characteristics of streptomycin. Further information regarding EPA drinking water models used in pesticide exposure assessment can be found at *http://www.epa.gov/oppefed1/models/water/index.htm.*

Based on the First Index Reservoir Screening Tool (FIRST), and Screening Concentration in Ground Water (SCI–GROW) models, for surface and ground water, respectively, the estimated drinking water concentrations (EDWCs) of streptomycin for ground and surface water were calculated as 1.2 parts per billion (ppb) and 51.4 ppb, respectively. The EDWCs are based on aerial application to apple orchards, which is the highest rate allowed by the label.

Modeled estimates of drinking water concentrations were directly entered into the dietary exposure model. For chronic dietary risk assessment, the EDWC value of 51.4 ppb for surface water was used to assess the dietary exposure contribution from drinking water.

3. *From non-dietary exposure.* The term ''residential exposure'' is used in this document to refer to non-occupational, non-dietary exposure (e.g., for lawn and garden pest control, indoor pest control, termiticides, and flea and tick control on pets).

Streptomycin is currently registered for the following uses that could result in residential exposures: Use in residential areas on trees and shrubs to control the same diseases (e.g., blight, various rots) for which it is used in commercial greenhouse and agricultural settings.

EPA assessed residential nondietary exposure using the following assumptions: Since streptomycin is not significantly absorbed through dermal route, only inhalation exposures were assessed for residential scenarios of homeowner application to fruit trees and shrubs using a low pressure handwand. Although a quantitative residential post-application inhalation exposure assessment was not performed, an occupational inhalation exposure assessment for handlers was performed which is representative of a higher-end, more intensive inhalation exposure. Thus, this assessment is also protective for evaluating any potential residential post-application inhalation exposure. Further information regarding EPA standard assumptions and generic inputs for residential exposures may be found at: *http://www.epa.gov/pesticides/trac/science/trac6a05.pdf.*

4. *Cumulative effects from substances with a common mechanism of toxicity.* Section 408(b)(2)(D)(v) of FFDCA requires that, when considering whether to establish, modify, or revoke a tolerance, the Agency consider ''available information'' concerning the cumulative effects of a particular pesticide's residues and ''other substances that have a common mechanism of toxicity.''

EPA has not found streptomycin to share a common mechanism of toxicity with any other substances, and streptomycin does not appear to produce a toxic metabolite produced by other substances. For the purposes of this tolerance action, therefore, EPA has assumed that streptomycin does not have a common mechanism of toxicity with other substances. For information regarding EPA's efforts to determine which chemicals have a common mechanism of toxicity and to evaluate the cumulative effects of such chemicals, see EPA's Web site at *http://www.epa.gov/pesticides/cumulative.*

C. Safety Factor for Infants and Children

1. *In general.* Section 408(b)(2)(C) of FFDCA provides that EPA shall apply an additional tenfold (10X) margin of safety for infants and children in the case of threshold effects to account for prenatal and postnatal toxicity and the completeness of the database on toxicity and exposure unless EPA determines based on reliable data that a different margin of safety will be safe for infants and children. This additional margin of safety is commonly referred to as the Food Quality Protection Act (FQPA) Safety Factor (SF). In applying this provision, EPA either retains the default value of 10X, or uses a different additional SF when reliable data available to EPA support the choice of a different factor.

2. *Prenatal and postnatal sensitivity.* In a rabbit developmental toxicity study, no teratogenic effects were observed at the highest dose tested (10 milligrams/kilogram/day (mg/kg/day) orally). However, women receiving clinical treatment at doses of approximately 15 mg/kg/day by intramuscular injection of streptomycin during pregnancy have been known to give birth to children with hearing loss or vestibular problems; no other teratogenic effects have been attributed to streptomycin treatment. Because only about 1% of an oral dose of streptomycin is absorbed by the body, that intramuscular injection corresponds to approximately 1,500 mg/kg/day by the oral route. Thus the pharmacological dose at which these prenatal effects have been observed is about 150 times higher than the no observed adverse effect level in the rabbit developmental toxicity study, and

approximately 30,000 times higher than the dose that produced the reduced weight gain endpoint used in establishing the chronic RfD, EPA is confident that the RfD will protect against teratogenic effects.

3. *Conclusion.* EPA has determined that reliable data show that the safety of infants and children would be adequately protected if the FQPA SF were reduced to 1. That decision is based on the following findings:

i. An extensive database exists from drug use of streptomycin in humans and animals, and all guideline toxicity data requirements for streptomycin have been waived. The toxicity of streptomycin was assessed using toxicity reviews provided by the FDA and from the published literature on drug use. Because the dose selected for risk assessment from agricultural use (based upon anticipated maximum exposures) is based upon a toxicity endpoint (decreased weight gain in test animals) that occurs at a much lower oral dose than the injected dose at which prenatal effects occur in humans, there are no residual concerns and the FQPA safety factor was reduced to 1x.

ii. There is some indication that streptomycin may be neurotoxic at the very high doses when injected as a drug. Injury to the 8th cranial nerve has been noted in some patients receiving streptomycin injections. However, this injury occurs because streptomycin accumulates in the inner ear and is not indicative of systemic injury to the nervous system. Other rare conditions reported in patients treated with streptomycin injections at clinical doses include neuromuscular blockade associated with anesthesia, enlarged blind spots of the eye, and paresthesia or abnormal sensations. Again, these responses are rare and occurred with large pharmacological doses at approximately 30,000 times higher than the RfD for streptomycin. A developmental neurotoxicity study is therefore not recommended, and there is no need for additional UFs to account for neurotoxicity.

iii. There was no evidence that *in utero* rabbits have increased susceptibility to streptomycin in the prenatal developmental study. A reproductive toxicity study has been waived and is therefore not available. Some children of mothers treated during pregnancy with streptomycin have been born with hearing deficits, which may indicate that the developing fetus is more sensitive than the mother to streptomycin-induced inner ear toxicity. However, these effects occurred after treatment with a directly injected pharmacological dose which is comparable to a dose about 150 times higher than the no observed adverse effect level in the rabbit developmental toxicity study, and approximately 30,000 times the chronic RfD EPA has selected for risk management purposes. At the much lower dose that EPA is using for risk management, there are no residual concerns. Therefore there are no concerns for prenatal effects.

iv. There are no residual uncertainties identified in the exposure databases; all guideline toxicity data requirements were waived because of the extensive clinical information available for streptomycin from decades of use as a drug in humans and animals. The dietary food exposure assessments were performed based on 100 PCT and tolerance-level residues. EPA made conservative (protective) assumptions in the ground and surface water modeling used to assess exposure to streptomycin in drinking water. EPA used similarly conservative assumptions to assess post-application exposure of children as well as incidental oral exposure of toddlers. These assessments will not underestimate the exposure and risks posed by streptomycin.

D. Aggregate Risks and Determination of Safety

EPA determines whether acute and chronic dietary pesticide exposures are safe by comparing aggregate exposure estimates to the acute PAD (aPAD) and chronic PAD (cPAD). For linear cancer risks, EPA calculates the lifetime probability of experiencing cancer given the estimated aggregate exposure. Short-, intermediate-, and chronic-term risks are evaluated by comparing the estimated aggregate food, water, and residential exposure to the appropriate PODs to ensure that an adequate MOE exists.

1. *Acute risk.* An acute aggregate risk assessment takes into account acute exposure estimates from dietary consumption of food and drinking water. No adverse effect resulting from a single oral exposure was identified and no acute dietary adverse effect endpoint was identified. Therefore, streptomycin is not expected to pose an acute risk.

2. *Chronic risk.* Using the exposure assumptions described in this unit for chronic exposure, EPA has concluded that chronic dietary exposure to streptomycin from food and water will utilize 13% of the cPAD for children 1–2 years old, the population group receiving the greatest exposure. Based on the explanation in the unit regarding residential use patterns, chronic residential exposure to residues of streptomycin is not expected.

3. *Short-term risk.* Short-term aggregate exposure takes into account short-term residential exposure plus chronic exposure to food and water (considered to be a background exposure level). Streptomycin is currently registered for uses that could result in short-term residential exposure. However, no such effects were identified in the studies for streptomycin. The Agency has determined that the chronic risk assessment is adequately protective for short-term exposures, and it is appropriate to aggregate chronic exposure through food and water (considered background exposure) with short-term residential exposures to streptomycin. Using the exposure assumptions described in this unit for short-term exposures, EPA has concluded the combined short-term food, water, and residential exposures from the highest exposure scenario result in an aggregate MOE of 2,100. Because EPA's level of concern for streptomycin is an MOE of 100 or below, this MOE is not of concern. Although a quantitative residential post-application inhalation exposure assessment was not performed, the occupational inhalation exposure assessment performed for handlers is representative of a worse case inhalation exposure and therefore protective of any potential post-application inhalation exposure in residential scenarios. The lowest MOE from the occupational assessments was 560, and assumed no use of protective equipment such as a respirator. Since this is higher than EPA's level of concern of an MOE of 100 or below it is not of concern.

4. *Intermediate-term risk.* Intermediate-term aggregate exposure takes into account intermediate-term non-dietary, non-occupational exposure plus chronic exposure to food and water (considered to be a background exposure level). Streptomycin is not registered for any use patterns that would result in intermediate-term residential exposure and no intermediate-term adverse effects have been identified. Because there is no intermediate-term residential exposure or adverse effects identified, and chronic dietary exposure has already been assessed under the appropriately protective cPAD (which is at least as protective as the POD used to assess intermediate-term risk), no further assessment of intermediate-term risk is necessary, and EPA relies on the chronic dietary risk assessment for evaluating intermediate-term risk for streptomycin.

5. *Aggregate cancer risk for U.S. population.* A quantitative cancer

assessment is unnecessary. Available data suggest there are no concerns for cancer from exposure to streptomycin, and EPA has concluded that streptomycin is not expected to pose a cancer risk to humans.

6. *Antibiotic resistance risk.* EPA estimated the potential for development of antibiotic resistance in pathogenic bacteria, in consideration of factors recommended by public health experts to sustain the effectiveness of antibiotic materials. EPA conducted a qualitative analysis of this use as outlined in FDA's Guidance for Industry (GFI) #152. FDA's GFI #152 addresses expansion of antibiotic uses outside clinical settings with respect to potential impact on resistance development. Existing resistance to streptomycin has diminished its use in clinical settings, although it is still used as a second line treatment for tuberculosis and used for several other bacterial diseases. However, based upon the limitations of the use under an emergency exemption, both in terms of rate and geographic area, EPA concluded that the use is expected to result in low risks of release into the environment, and subsequently low exposures. Thus, EPA determined that the overall rating for risks of resistance development from this emergency exemption use under an emergency exemption is ''low.'' The analysis, ''Review of Florida Department of Agriculture/AgroSource's Analysis of Streptomycin's Safety with Regard to Its Microbiological Effect on Bacteria of Human Health Concern (FDA/CVM Guidance to Industry #152)'', as well as FDA's GFI #152, may be found at *http://www.regulations.gov,* under docket ID number EPA–HQ–OPP–2011–0852.

7. *Pharmaceutical aggregate risk.* Section 408 of the FFDCA requires EPA to consider potential sources of exposure to a pesticide and related substances in addition to the dietary sources expected to result from a pesticide use subject to the tolerance. In order to determine whether to maintain a pesticide tolerance, EPA must ''determine that there is a reasonable certainty of no harm.'' Under FFDCA section 505, the Food and Drug Administration reviews human drugs for safety and effectiveness and may approve a drug notwithstanding the possibility that some users may experience adverse side effects. EPA does not believe that, for purposes of the section 408 dietary risk assessment, it is compelled to treat a pharmaceutical user the same as a non-user, or to assume that combined exposures to pesticide and pharmaceutical residues that lead to a physiological effect in the user constitutes ''harm'' under the meaning of section 408 of the FFDCA.

Rather, EPA believes the appropriate way to consider the pharmaceutical use of streptomycin in its risk assessment is to examine the impact that the additional nonoccupational pesticide exposures would have to a pharmaceutical user exposed to a related (or, in some cases, the same) compound. Where the additional pesticide exposure has no more than a minimal impact on the pharmaceutical user, EPA could make a reasonable certainty of no harm finding for the pesticide tolerances of that compound under section 408 of the FFDCA. If the potential impact on the pharmaceutical user as a result of co-exposure from pesticide use is more than minimal, then EPA would not be able to conclude that dietary residues were safe, and would need to discuss with FDA appropriate measures to reduce exposure from one or both sources.

Injected drug doses are approximately 15 mg/kg/day. Because the oral absorption of streptomycin is <1%, this corresponds to an oral equivalent dose of 1,500 mg/kg/day. This oral equivalent dose is approximately 375,000 times the highest dietary exposure estimate of 0.004 mg/kg/day (the food and water exposure estimate for the highest-exposed population (children 1–2 years old)). Therefore, dietary exposure from pesticide uses of streptomycin is negligible compared to drug exposure and would not contribute to drug toxicity, so there are no concerns for risks from dietary contribution of streptomycin exposure from pesticide use, in patients receiving streptomycin drug injections. Because the pesticide exposure has no more than a minimal impact on the total dose to a pharmaceutical user, EPA believes that there is a reasonable certainty that no harm will result from the potential dietary pesticide exposure of a user being treated therapeutically with streptomycin.

8. *Determination of safety.* Based on these risk assessments, EPA concludes that there is a reasonable certainty that no harm will result to the general population, or to infants and children, from aggregate exposure to streptomycin residues.

V. Other Considerations

A. Analytical Enforcement Methodology

An adequate enforcement methodology, ''Confirmation of Aminoglycosides by HPCL–MS/MS''; United States Department of Agriculture, Food Safety and Inspection Service, Office of Public Health Science, SOP No: CLG–AMG1.02, using high performance liquid chromatography with tandem mass spectrometry for detection (HPLC–MS/MS), is available to enforce the tolerance expression.

The method may be requested from: Chief, Analytical Chemistry Branch, Environmental Science Center, 701 Mapes Rd., Ft. Meade, MD 20755–5350; telephone number: (410) 305–2905; email address: *residuemethods@epa.gov.*

B. International Residue Limits

In making its tolerance decisions, EPA seeks to harmonize U.S. tolerances with international standards whenever possible, consistent with U.S. food safety standards and agricultural practices. EPA considers the international maximum residue limits (MRLs) established by the Codex Alimentarius Commission (Codex), as required by FFDCA section 408(b)(4). The Codex Alimentarius is a joint United Nations Food and Agriculture Organization/World Health Organization food standards program, and it is recognized as an international food safety standards-setting organization in trade agreements to which the United States is a party. EPA may establish a tolerance that is different from a Codex MRL; however, FFDCA section 408(b)(4) requires that EPA explain the reasons for departing from the Codex level.

The Codex has not established an MRL for streptomycin on grapefruit.

VI. Conclusion

Therefore, time-limited tolerances are established for residues of streptomycin, in or on grapefruit at 0.15 ppm and grapefruit, dried pulp at 0.40 ppm. These tolerances expire on December 31, 2015.

VII. Statutory and Executive Order Reviews

This final rule establishes tolerances under FFDCA sections 408(e) and 408(l)(6). The Office of Management and Budget (OMB) has exempted these types of actions from review under Executive Order 12866, entitled ''Regulatory Planning and Review'' (58 FR 51735, October 4, 1993). Because this final rule has been exempted from review under Executive Order 12866, this final rule is not subject to Executive Order 13211, entitled ''Actions Concerning Regulations That Significantly Affect Energy Supply, Distribution, or Use'' (66 FR 28355, May 22, 2001) or Executive Order 13045, entitled ''Protection of Children from Environmental Health Risks and Safety Risks'' (62 FR 19885, April 23, 1997). This final rule does not

contain any information collections subject to OMB approval under the Paperwork Reduction Act (PRA), 44 U.S.C. 3501 *et seq.,* nor does it require any special considerations under Executive Order 12898, entitled ''Federal Actions to Address Environmental Justice in Minority Populations and Low-Income Populations'' (59 FR 7629, February 16, 1994).

Since tolerances and exemptions that are established in accordance with FFDCA sections 408(e) and 408(l)(6), such as the tolerances in this final rule, do not require the issuance of a proposed rule, the requirements of the Regulatory Flexibility Act (RFA) (5 U.S.C. 601 *et seq.*) do not apply.

This final rule directly regulates growers, food processors, food handlers, and food retailers, not States or tribes, nor does this action alter the relationships or distribution of power and responsibilities established by Congress in the preemption provisions of FFDCA section 408(n)(4). As such, the Agency has determined that this action will not have a substantial direct effect on States or tribal governments, on the relationship between the national government and the States or tribal governments, or on the distribution of power and responsibilities among the various levels of government or between the Federal Government and Indian tribes. Thus, the Agency has determined that Executive Order 13132, entitled ''Federalism'' (64 FR 43255, August 10, 1999) and Executive Order 13175, entitled ''Consultation and Coordination with Indian Tribal Governments'' (65 FR 67249, November 9, 2000) do not apply to this final rule. In addition, this final rule does not impose any enforceable duty or contain any unfunded mandate as described under Title II of the Unfunded Mandates Reform Act of 1995 (UMRA) (2 U.S.C. 1501 *et seq.*).

This action does not involve any technical standards that would require Agency consideration of voluntary consensus standards pursuant to section 12(d) of the National Technology Transfer and Advancement Act of 1995 (NTTAA) (15 U.S.C. 272 note).

VIII. Congressional Review Act

Pursuant to the Congressional Review Act (5 U.S.C. 801 *et seq.*), EPA will submit a report containing this rule and other required information to the U.S. Senate, the U.S. House of Representatives, and the Comptroller General of the United States prior to publication of the rule in the **Federal Register**. This action is not a ''major rule'' as defined by 5 U.S.C. 804(2).

List of Subjects in 40 CFR Part 180

Environmental protection, Administrative practice and procedure, Agricultural commodities, Pesticides and pests, Reporting and recordkeeping requirements.

Dated: May 9, 2013.

Daniel J. Rosenblatt,

Acting Director, Registration Division, Office of Pesticide Programs.

Therefore, 40 CFR chapter I is amended as follows:

PART 180—[AMENDED]

■ 1. The authority citation for part 180 continues to read as follows:

Authority: 21 U.S.C. 321(q), 346a and 371.

■ 2. Section 180.245 is amended by adding paragraph (b) to read as follows:

§ 180.245 Streptomycin; tolerances for residues.

* * * * *

(b) *Section 18 emergency exemptions.* Time-limited tolerances are established for residues of streptomycin, in or on the agricultural commodities, as specified in the following table, resulting from use of the pesticide pursuant to FIFRA section 18 emergency exemptions. Compliance with the tolerance levels listed in the following table is to be determined by measuring the levels of streptomycin only, in or on the commodities listed in the table. The tolerances expire on the dates specified in the table.

Commodity	Parts per million	Expiration date
Grapefruit	0.15	12/31/2015
Grapefruit, dried pulp	0.40	12/31/2015

* * * * *

[FR Doc. 2013–11858 Filed 5–16–13; 8:45 am]

BILLING CODE 6560–50–P

DEPARTMENT OF HEALTH AND HUMAN SERVICES

Office of Inspector General

42 CFR Part 1007

[OIG–1203–F]

State Medicaid Fraud Control Units; Data Mining

AGENCY: Office of Inspector General (OIG), HHS.

ACTION: Final rule.

SUMMARY: This final rule amends a provision in HHS regulations prohibiting State Medicaid Fraud Control Units (MFCU) from using Federal matching funds to identify fraud through screening and analyzing State Medicaid data, known as data mining. To support and modernize MFCU efforts to effectively pursue Medicaid provider fraud, we finalize proposals to permit Federal financial participation (FFP) in costs of defined data mining activities under specified circumstances. In addition, we finalize requirements that MFCUs annually report costs and results of approved data mining activities to OIG.

DATES: These regulations are effective on June 17, 2013.

FOR FURTHER INFORMATION CONTACT: Richard Stern, Department of Health and Human Services, Office of Inspector General, (202) 619–0480.

SUPPLEMENTARY INFORMATION:

I. Background and Statutory Authority

In 1977, the Medicare-Medicaid Anti-Fraud and Abuse Amendments (Pub. L. 95–142) were enacted to strengthen the capability of the Government to detect, prosecute, and punish fraudulent activities under the Medicare and Medicaid programs. Section 17(a) of the statute amended section 1903(a) of the Social Security Act (the Act) to provide for Federal participation in the costs attributable to establishing and operating a MFCU. The requirements for operating a MFCU appear at section 1903(q) of the Act. Promulgated in 1978, regulations implementing the MFCU authority appear at 42 CFR part 1007.

Section 1903(a)(6) of the Act requires the Secretary of Health and Human Services (the Secretary) to pay FFP to a State for MFCU costs ''attributable to the establishment and operation of a MFCU'' and ''found necessary by the Secretary for the elimination of fraud in the provision and administration of medical assistance provided under the State plan.'' Under the section, States receive 90 percent FFP for an initial 3-year period for the costs of establishing and operating a MFCU, including the costs of training, and 75 percent FFP thereafter. Currently, all States with MFCUs receive FFP at a 75-percent rate. In accordance with section 1903(q) of the Act, MFCUs must be separate and distinct from the State's Medicaid agency. For a State Medicaid agency, general administrative costs of operating a State Medicaid program are reimbursed at a rate of 50 percent, although enhanced FFP rates are available for certain activities specified by statute, including those associated with Medicaid management information systems (MMIS).

To increase MFCU effectiveness in eliminating Medicaid fraud, this final rule modifies an existing regulatory prohibition on the payment of FFP for activities generally known as data mining. We discuss the reasons for this modification below.

II. Provisions of the Proposed Regulation

We published a proposed rule in the **Federal Register** on March 17, 2011 (76 FR 14637), that would permit use of Federal matching funds by MFCUs, under specified conditions, for identification of potential Medicaid fraud through data mining activities.

Current Federal regulations at 42 CFR 1007.19 specify that State MFCUs are prohibited from using Federal matching funds to conduct ''efforts to identify situations in which a question of fraud may exist, including the screening of claims, analysis of patterns of practice, or routine verification with beneficiaries of whether services billed by providers were actually received.'' The prohibition on Federal matching for ''screening of claims [and] analysis of patterns of practice'' is commonly interpreted as a prohibition on Federal matching for the costs of data mining by MFCUs. We proposed to amend § 1007.19(e) to provide for an exception to this general prohibition on FFP. We proposed to add a new § 1007.20, that would describe the conditions under which the Federal share of data mining costs would be available to MFCUs. We also proposed to amend § 1007.1 (''Definitions'') by adding a definition of data mining for the purposes of this rule. Finally, we proposed to amend § 1007.17 (''Annual Report'') to include additional reporting requirements by MFCUs to capture costs associated with data mining activities, the outcome and status of those cases, and monetary recoveries resulting from those activities.

For the purposes of the proposed rule, we used the term ''data mining'' to refer specifically to the practice of electronically sorting Medicaid claims through statistical models and intelligent technologies to uncover patterns and relationships in Medicaid claims activity and history to identify aberrant utilization and billing practices that are potentially fraudulent.

Data mining has historically been the responsibility of each State Medicaid agency, which analyzes Medicaid data as part of its routine program-monitoring activities. This practice of relying on the State Medicaid agency has placed the sole burden of identifying potentially fraudulent practices using data mining on the State Medicaid agencies and has required the MFCUs to remain highly dependent on referrals from State Medicaid agencies and other external sources.

For many years, we understand that many MFCUs have had online access to Medicaid claims information for purposes of individual case development, but have been prohibited by regulation from receiving FFP for using claims data for identifying other potential cases. Since the 1978 rule was promulgated, highly advanced tools and methods have become available that allow law enforcement and other oversight entities to analyze claims information and other data. This includes the detection of aberrant billing patterns and the development of predictive models. These tools and methods have been extremely effective in identifying potential fraud cases, and they are routinely used by other law enforcement agencies. We believe that allowing MFCUs to receive funding for data mining will enable them to marshal their resources more effectively and take full advantage of their expertise in detecting and investigating Medicaid fraud vulnerabilities.

At the same time, we recognized in the proposed rule that three elements are critical to ensuring the effective use of data mining by MFCUs.

First, MFCUs and State Medicaid agencies must fully coordinate the MFCUs' use of data mining and the identification of possible provider fraud. For example, MFCUs should consult with the State Medicaid agencies in considering data mining priorities that may also be subject to program integrity and audit reviews. Similarly, State Medicaid agencies and MFCUs should coordinate data mining projects with activities of other organizations, such as ''review contractors'' that are selected by the Centers for Medicare & Medicaid Services (CMS) and are responsible for identifying providers subject to audits or program administrative actions.

Second, while MFCUs are experienced in pursuing Medicaid fraud, it is the State Medicaid agencies that set the policies governing the appropriate activities of Medicaid providers. The MFCUs may be unaware of recent changes in reimbursement policy, making data appear aberrant when they are not. To avoid wasting resources and pursuing data mining projects without adequate basis, the MFCUs must coordinate their efforts closely with the State Medicaid agency, confirming that the results obtained from data mining are interpreted correctly, consistent with current policy and practice.

Third, MFCU staff should be properly trained in data mining techniques. Although tools and methods for data mining may be widely available, appropriate training is necessary.

For these reasons, we proposed in new 42 CFR 1007.20 that as a condition for claiming FFP in costs of data mining, a MFCU must identify methods for addressing these three critical elements in its agreements with the State Medicaid agency: Coordination with the State Medicaid agency, programmatic knowledge, and training. We further proposed that OIG must provide specific approval of that agreement to a MFCU that wants to engage in data mining. OIG will consult with CMS in approving data mining requests, given the CMS role in overseeing the activities of State Medicaid agencies and the critical importance of MFCU coordination with those agencies.

We also proposed to require that MFCUs approved to receive FFP for data mining include the following information in their annual reports to OIG: Costs associated with data mining activities, the number of cases generated from data mining activities, the outcome and status of those cases, and monetary recoveries resulting from those activities. This information will be used by OIG in overseeing and monitoring of MFCUs.

III. Analysis of and Responses to Public Comments

We received 13 sets of timely comments on the March 17, 2011, proposed rule (76 FR 14637) from a national anti-fraud association, groups of health care providers and beneficiaries, State Attorneys General, individual MFCUs, a State Medicaid agency, a managed care entity, and information technology health services companies. Most commenters supported our proposal to provide Federal reimbursement for data mining activities by MFCUs, citing potential cost savings through earlier identification of Medicaid fraud, the benefit of conserving administrative resources by better targeting of anti-fraud investigations, and the potential for increased effectiveness in finding and eliminating fraud and abuse. Commenters supported the addition of data mining as an optional tool for MFCUs that wish to employ it, but not as a requirement for all MFCUs. Supporting commenters also noted that the results of data mining activities should not be viewed as proof of provider fraud or abuse, but as information that assists state officials in targeting anti-fraud monitoring and investigations.

We reviewed each set of comments and grouped them into related categories based on subject matter. Below we set forth summaries of the public comments received, our responses to those comments, and changes we are making in this final rule as a result of the comments received.

A. Modifications to the Data Mining Prohibition

Comment: One commenter recommended that OIG eliminate the prohibition on paying FFP for data mining that is in 42 CFR 1007.19(e)(2), rather than establishing an approval mechanism for data mining as we have proposed in a new § 1007.20. The commenter noted the technological advances that have occurred since the rule was originally published in 1978 and that data mining is viewed by the MFCUs as a ''supplemental investigative tool.'' The commenter stated its belief that the existing oversight authority in the regulation would provide adequate monitoring of data mining activities.

Response: We do not believe that a wholesale elimination of the prohibition on data mining is appropriate. To be effective, data mining requires unique coordination of the resources and expertise of both the MFCU and the State Medicaid agency, as well as properly trained staff. In the absence of an approval process, we believe that a MFCU might undertake a data mining program without trained staff, might duplicate data mining activities of the Medicaid agency, or might pursue projects that rely upon a misunderstanding of program rules or policy.

However, to reflect technological advances in the use of data, we are modifying the proposed definition of data mining to emphasize the wider range of the possible uses of data, including the use of ''statistical models and intelligent technologies'' as well as other means of electronically sorting Medicaid data that are conducted for the purpose of detecting circumstances that might involve fraud. We are therefore adding the phrase ''including but not limited to the use of'' before ''statistical models and intelligent technologies'' in the definition that appears in section 1007.1 to emphasize the range of methods in which data could be used to identify potential fraud cases.

B. Use of Data Mining in the Course of an Investigation

Comment: One commenter suggested that we add the word ''randomized'' before the word ''practice'' in defining data mining and that we add a sentence to clarify that the definition is not intended to prohibit the MFCUs from conducting other types of Medicaid data analysis in the normal course of their investigations.

Response: We agree that the intent of the regulation is not to limit other types of Medicaid data analysis being conducted in the normal course of an investigation. Units may analyze relevant Medicaid data as part of the evidence-gathering process while investigating a particular possible fraud. In some instances, this data analysis conducted as part of a particular investigation might allow the Unit to identify other potential targets, which would result in opening new fraud cases. Such data analysis is an accepted part of a MFCU's investigative function and does not implicate the prohibition contained in section 1007.19(e)(2) on paying FFP for ''expenditures attributable to . . . [e]fforts to identify situations in which a question of fraud may exist, including the screening of claims [or] analysis of patterns of practice. . . .'' Further, analysis of Medicaid data to support an investigation of a particular provider is not subject to the data mining approval process under new § 1007.20. However, we do not believe the text of the regulation itself needs to state this. We are also concerned that adding the word ''randomized'' may limit the statistical techniques employed by a MFCU when conducting data mining. Therefore, we are not adding the word ''randomized'' as part of our modifications to the proposed language.

Comment: One commenter expressed concern that the definition of data mining includes only ''Medicaid claims'' as the type of data subject to analysis and suggested expanding the definition to include managed care encounter data and capitation payments.

Response: We agree that the proposed definition should be expanded. We recognize that managed care constitutes a significant and growing proportion of the national Medicaid program and that the reference to ''claims data'' may be too limited.

We also recognize that MFCUs may find it useful to mine other types of data. For example, section 2701 of the Patient Protection and Affordable Care Act, Public Law 111–148 (2010), enacted new requirements for States to collect and provide quality data on health care furnished to Medicaid eligible adults. These data could prove fruitful in identifying providers that may be submitting Medicaid billings for services that are of substandard quality or pose harm to beneficiaries. There are also bundled payments and other evolving payment methods where MFCUs might determine that data could be successfully mined to identify potential fraud. Finally, there may be relevant non-Medicaid data that would be useful to data mining, such as information from other Federal or State programs or from commercial payers.

Therefore, in this final rule, we have removed the reference to claims data and revised the definition of data mining to broadly encompass Medicaid and other relevant data that may be used to identify aberrant utilization, billing, or other practices that are potentially fraudulent.

C. Annual Report

Comment: One commenter expressed support for the proposal to include data mining information as part of the existing annual report rather than as a separate document. The commenter opposed requiring MFCUs to separately report costs and indicate the return on investment from data mining. The commenter asserted that data mining activities could be adequately monitored through the agreement between the MFCU and the State Medicaid agency. The commenter also said that providing information about costs and return on investment does not further the three elements we identified as necessary for data mining to be effective: Coordination with the State Medicaid agency, programmatic knowledge, and training.

Response: We believe that providing information about data mining costs and rate of return is an appropriate and necessary addition to the annual report. We proposed to amend our regulations to permit Federal reimbursement for data mining because we believe that the use of such modern technologies can help MFCUs more effectively identify, investigate, and prosecute Medicaid fraud. We believe that collecting basic cost and performance information will be critical to carrying out our oversight responsibilities and to determining whether MFCUs are using the additional Federal funds to increase their effectiveness and efficiency in pursuing fraud. We are therefore finalizing our requirement that MFCUs approved to receive FFP in costs for data mining must provide specific information on their activities in their annual reports to OIG.

D. Requirements for the MFCU Agreement With the State Medicaid Agency

Comment: A commenter expressed concern that requiring a description of the duration of the MCFU activity and staff time might be appropriate for a

demonstration project but is an inefficient use of MFCU time and resources. Another concern raised by the commenter is that establishing a set duration and staff time may not meet the needs of fraud investigations, particularly if duration and staff time are treated as minimums that the MFCU would be expected to meet. Finally, the commenter noted that requiring a defined duration and staff time does not address any of the three elements identified by OIG as critical to effective data mining.

Response: We agree that defining duration and staffing before undertaking data mining activities may not be efficient or reasonable for an activity that MFCUs expect to continue for an extended period and expect to yield investigative leads that were not anticipated at the outset. We are concerned that MFCUs may be reluctant to invest time and resources in data mining if they believe that an estimate of resources will become an inflexible limitation. Therefore, the final rule eliminates a requirement in the proposed rule that MFCUs define duration and staff time as part of their respective agreements with State Medicaid agencies.

However, we are mindful of our responsibility to monitor MFCUs' effective and efficient operation. We have therefore included in the final rule a requirement that staff time and other costs devoted to data mining activities be reported in a section of the annual report provided to OIG. We will review annual reports carefully to determine whether MFCUs are effectively using their resources to carry out their functions, including identifying potential fraud through data mining and other activities.

In addition, we are establishing a 3-year duration for each approval of FFP for data mining by a MFCU. We believe a 3-year period will allow OIG to evaluate whether a MFCU is using its data mining resources effectively. We also believe that 3 years will be sufficient for MFCUs and State agencies to implement their data mining activities, assess their operations, and determine any changes that would increase their effectiveness. At the end of the 3-year period, the MFCU may request renewal of its approval by submitting an updated agreement with the State agency. In considering renewal, OIG will review any changes to the agreement and will consider the information provided on data mining activities in annual reports and from other sources.

Comment: Another commenter suggested that OIG obtain further information, including the amount of outside support that MFCUs receive in conducting data mining.

Response: We do not agree that we should further require MFCUs to identify the amount of outside support for conducting data mining. We believe that expecting a MFCU to include such information in its agreement with the State agency at the start of the activity would be burdensome. We have asked only for information that will facilitate essential coordination between the MFCU and the State Medicaid agency and that will permit OIG, in consultation with CMS, to determine whether Federal reimbursement for data mining activities should be expected to increase a MFCU's effectiveness in investigating and prosecuting Medicaid fraud. We will not require any further information on outside support to be provided to OIG.

Comment: A commenter expressed a concern that naming a primary point of contact is not advisable because personnel may change frequently.

Response: We agree with the comment and will instead require in this final rule that the agreement identify both the individual who will serve as the principal point of contact in each agency, as well as the contact information, title, and office of such individuals.

E. Approval by OIG in Consultation With CMS

Comment: A commenter stated that approval of data mining by OIG, in consultation with CMS, is unnecessary if the data mining proposal has been approved by the State Medicaid agency as part of the review of the memorandum of understanding. The commenter also requested that, if OIG approval is included, the regulation identify the number of days in which OIG will make an approval decision.

Response: OIG is responsible for overseeing the efficiency and effectiveness of the MFCU program. We believe that OIG would not be properly carrying out this responsibility if it did not review and approve the data mining agreement between the State MFCU and the State Medicaid agency. As part of that review, OIG will examine whether MFCUs have both the technical infrastructure and adequate staffing to conduct data mining and whether they have procedures in place to coordinate data mining projects with State Medicaid agency staff. Also, because of the role and experience of CMS in overseeing the State Medicaid agencies, we believe that consultation with CMS is necessary.

We agree that OIG should review data mining requests in an expeditious manner. We are therefore adding to the final regulation a 90-day period during which OIG will review and respond to a MFCU's request for data mining approval or the request will be considered approved if OIG fails to respond within the 90-day review period. This review period is comparable to the timeframes that CMS follows for Medicaid State plan approvals and would provide sufficient time for OIG to review and consult with CMS on the proposed data mining plan. Should OIG need additional information, a written request by OIG to the MFCU would extend the review period for another 90 days, beginning on receipt by OIG of the MFCU's response. We will finalize the requirement that OIG, in consultation with CMS, must approve a MFCU's data mining agreement with the State Medicaid agency and add a 90-day period for OIG to respond to the MFCU's request for approval, with an extension of 90 additional days if OIG sends a written request for further information.

F. Burden on State Medicaid Agency Staff

Comment: A commenter expressed concern that the wording of the background to the proposed rule was vague regarding involvement by State Medicaid agencies, and it suggested that undue burdens might be imposed on Medicaid agency staff. The commenter was concerned that data mining by MFCUs will place undue burdens on already strapped State resources and will inhibit current program integrity efforts. The commenter proposed alternative wording to emphasize that data mining projects would be conducted entirely by MFCU staff and that Medicaid agency staff would operate in a support role.

Response: We do not believe that MFCU data mining should burden State Medicaid agency staff or interfere with their independent program integrity efforts. The commenter did not suggest changes to the proposed regulation itself. The text of the final regulation will require a MFCU that engages in data mining to describe in its negotiated agreement with the State Medicaid agency both the methods of coordination with the Medicaid agency as well as how the MFCU will obtain training in data mining techniques.

We agree that MFCU data mining will be conducted entirely by MFCU staff and that State agency staff will operate in a supporting role. MFCU data mining will not inhibit current program integrity efforts since the MFCU's

activities will be separate from current program integrity efforts and should not interfere with ongoing efforts by the Medicaid agency to identify aberrant payments. Moreover, consistent with the agreement between the MFCU and State agency, the Medicaid agency's supporting role should not impose an undue burden on State agency resources. The Medicaid agency should already work closely with the MFCU in coordinating administrative actions and in providing programmatic and policy information to the MFCU. The Medicaid agency may serve as a source of training for the MFCU in data mining techniques, but there are other sources of such training so this should also not present an undue burden on the Medicaid agency. Finally, we note that if the Medicaid agency and the MFCU are not currently working in a collaborative and efficient manner, this could be the basis for denying a MFCU's request to conduct data mining.

G. Effects of Data Mining on Providers

Comment: One commenter noted that OIG should require State Medicaid programs to describe how providers may challenge the results of data mining. The commenter also asked that OIG allow FFP for provider outreach and education by MFCU staff.

Response: OIG does not establish requirements for State Medicaid agencies, and we do not agree that a MFCU should set up a special process to permit providers to question or challenge a fraud investigation undertaken as a result of data mining. A provider would have the same legal ability to defend himself or herself in an investigation or prosecution undertaken by a MFCU whether it was the result of data mining or another source of referrals to the MFCU. Moreover, we do not believe that it is within the scope of this regulation, or within our general oversight authority, to dictate to States how their legal systems would allow for providers to challenge a particular investigation or case.

OIG recognizes that provider outreach and education may be useful and important and that many State Medicaid agencies have established provider education and outreach programs for which FFP is available. We would encourage MFCU staff to assist State Medicaid agencies, as part of their coordinating efforts, in outreach and education directed toward fraud detection and prevention.

Comment: Another commenter raised a concern about overlap and duplication among Medicare and Medicaid entities, such as CMS contractors, which may audit and investigate some of the same providers and situations. The commenter asked that OIG carefully monitor data mining activities to safeguard Federal programs and avoid unduly burdening providers.

Response: It is outside the scope of this regulation to establish monitoring requirements for audit activities of State Medicaid programs or of Federal entities, such as CMS contractors, mentioned by the commenter. In the final rule implementing the Medicaid Recovery Audit Contractor (RAC) program (76 FR 57808 (September 16, 2011)), CMS noted that State Medicaid agencies are required to coordinate auditing efforts and to make referrals of suspected fraud and/or abuse to the MFCU or other appropriate law enforcement agency. In this final rule, OIG has provided that State MFCUs must coordinate data mining activities with State Medicaid agencies to ensure that Medicaid policies are well understood by the MFCU, that data mining strategies are not duplicative, and that MFCUs are aware of any program integrity reviews by State agencies that may involve the same provider or category of providers. However, we want to again make clear that we do not intend that this coordination will interfere with MFCUs' investigative independence. Audits or administrative reviews by a State Medicaid agency, or a State or Federal audit or program integrity contractor, may not prevent a MFCU from initiating, carrying out, or completing a fraud investigation or prosecution that may result from data mining.

H. Coordination With Managed Care Organizations

Comment: Several commenters recommended that the regulation be expanded to require that MFCUs coordinate their data mining activities with Medicaid managed care organizations, if appropriate, for a particular State.

Response: Our general approach to data mining by MFCUs is to give each MFCU the autonomy to choose how to operate its programs based on the needs and priorities of each State. While we have required each MFCU to describe its coordination with its State Medicaid agency if the MFCU intends to conduct data mining, we regard this coordination as an indispensable element for data mining to be successful. Coordination with managed care plans may be an effective practice in certain States. However, we believe this determination should be made by the MFCU, in consultation with the State Medicaid agency and in the context of other data mining priorities, and we will therefore not require it of all MFCUs.

I. Experience With Health Care Data Mining

Comment: A commenter recommended that OIG require data miners to have experience and expertise with health care claims data mining and recommended certain data elements and data mining techniques to enhance effectiveness of MFCU activities.

Response: We agree that MFCU staff engaged in data mining should have the requisite training to effectively conduct data mining projects. For this reason, we have established in the regulation a condition that MFCU employees engaged in data mining receive specialized training in data mining techniques. To the extent that the commenter is suggesting that MFCUs employ specific individuals with a particular background in data mining, we are not imposing this as a requirement. We believe that MFCUs can determine their own staffing needs as they do for the other professional activities in which they engage.

With respect to data mining techniques, we believe that data mining approaches should be selected by the MFCU, in consultation with the State Medicaid agency and in light of the particular needs, priorities, and systems in that State. We will therefore not require the use of any specific data mining technologies or approaches.

IV. Regulatory Impact Statement

A. Regulatory Analysis

We have examined the impact of this final rule as required by Executive Orders 12866 and 13563, the Unfunded Mandates Reform Act of 1995, and the Regulatory Flexibility Act of 1980 (RFA) (Pub. L. 96–354).

Executive Orders 12866 and 13563

Executive Orders 12866 and 13563 direct agencies to assess all costs and benefits of available regulatory alternatives and, when regulation is necessary, to select regulatory approaches that maximize net benefits (including potential economic, environmental, public health, and safety effects; distributive impacts; and equity). Executive Order 13563 emphasizes the importance of quantifying both costs and benefits, of reducing costs, of harmonizing rules, and of promoting flexibility. A regulatory impact analysis must be prepared for major rules with economically significant effects ($136 million or more in any given year). We believe that the aggregate impact of this

rule does not reach this ''economically significant'' threshold, and thus, is not considered a major rule.

1. Estimated Impact on Medicaid Program Expenditures

We estimate below the impact of this rule on Medicaid expenditures over the next 10 years, including both Federal and State expenditures. These estimates are based on the following: MFCU grant award amounts, expenditures and recoveries from FY 2007–2012 reported to OIG; information from a Florida MFCU project that commenced in 2010 under which the Unit conducts data mining as part of a demonstration waiver approved by the Secretary; State Program Integrity Assessment provided to CMS from FY 2007 to FY 2010; and results from a 2009 National Health Policy Forum presentation ''Prevention and Early Detection of Health Care Fraud, Waste, and Abuse'', which reported data from Independence Blue Cross's use of data mining for their benefit plans.

Based on analysis of the information and data described above, we estimated the potential rate of return on MFCU data mining activities. Table 1 contains the estimates for the total cost of data mining, total recoveries as a result of data mining, and net total impact. Table 1 also includes costs, recoveries, and net impact for both Federal and State levels. We refined our estimates to account for the likelihood that data mining would not provide any recoveries in the first year and a limited amount of recoveries in the second year. Table 1 assumes a medium rate of State MFCU participation in data mining activities (40%), a medium rate of return on data mining activities ($6.90 per $1 spent), and 33% of recoveries in the second year. The net Federal impact is savings of $34.3 million from FY 2014–FY 2023.

TABLE 1—ESTIMATED IMPACT ON MEDICAID EXPENDITURES AND RECOVERIES FOR MFCU DATA MINING ACTIVITIES

	2014	2015	2016	2017	2018	2019	2020	2021	2022	2023	2014–2023
Total Cost	$1.1	$1.1	$1.2	$1.2	$1.2	$1.2	$1.3	$1.3	$1.3	$1.4	$12.3
Total Recoveries	$0.0	−$2.6	−$8.0	−$8.2	−$8.4	−$8.6	−$8.8	−$8.9	−$9.1	−$9.3	−$71.9
Net Total Impact	$1.1	−$1.5	−$6.9	−$7.0	−$7.2	−$7.3	−$7.5	−$7.7	−$7.8	−$8.0	−$59.8
Federal Cost	$0.8	$0.9	$0.9	$0.9	$0.9	$0.9	$1.0	$1.0	$1.0	$1.0	$9.3
Federal Recoveries	$0.0	−$1.6	−$4.9	−$5.0	−$5.1	−$5.2	−$5.3	−$5.4	−$5.5	−$5.6	−$43.6
Net Federal Impact	$0.8	−$0.7	−$4.0	−$4.1	−$4.2	−$4.3	−$4.3	−$4.4	−$4.5	−$4.6	−$34.3
State Cost	$0.3	$0.3	$0.3	$0.3	$0.3	$0.3	$0.3	$0.3	$0.3	$0.3	$3.0
State Recoveries	$0.0	−$1.0	−$3.2	−$3.2	−$3.3	−$3.4	−$3.5	−$3.6	−$3.6	−$3.7	−$28.5
Net State Impact	$0.3	−$0.8	−$2.9	−$2.9	−$3.0	−$3.1	−$3.2	−$3.2	−$3.3	−$3.4	−$25.5

Note: all figures in millions of dollars; totals may not add due to rounding.

2. Estimated Impact on Industry

We estimate that MFCU data mining will likely have a limited impact on the health care industry. We believe that the total number of fraud investigations of providers would increase only to the extent that the MFCUs receive additional budget authority from the States to seek an expansion of their operations. Therefore, to the extent that there is any economic impact, we believe that potential costs to the health care industry will be minimal and will be surpassed by savings of Federal and State dollars.

3. Unfunded Mandates Reform Act

Title II of the Unfunded Mandates Reform Act of 1995 (UMRA) (2 U.S.C. 1531–1538) establishes requirements for Federal agencies to assess the effects of their regulatory actions on State, local, and tribal governments and the private sector. Under UMRA, agencies must assess a rule's anticipated costs and benefits before issuing any rule that may result in aggregate costs to State, local, or tribal governments, or the private sector, of greater than $100 million in 1995 dollars (currently adjusted to $139 million). This final rule does not impose any Federal mandates on any State, local, or tribal government or the private sector within the meaning of UMRA, and thus a full analysis under UMRA is not necessary.

4. Regulatory Flexibility Act

The Regulatory Flexibility Act (RFA) (5 U.S.C. 601 et seq.) generally requires an agency to conduct a regulatory flexibility analysis of any rule subject to notice and comment rulemaking requirements unless the agency certifies that the rule will not have a significant economic impact on a substantial number of small entities. For the purposes of RFA, small entities include small businesses, certain nonprofit organizations, and small government jurisdictions. Individuals and States are not included in this definition of a small entity. This final rule would revise regulations that prohibit State MFCUs from using Federal matching funds to conduct ''efforts to identify situations in which a question of fraud may exist, including the screening of claims, analysis of patterns of practice, or routine verification with beneficiaries of whether services billed by a provider were actually received.'' These revisions impose no significant economic impact on a substantial number of small entities. Therefore, the undersigned certifies that this rule will not have a significant impact on a substantial number of small entities.

5. Executive Order 13132

Executive Order 13132 establishes certain requirements that an agency must meet when it promulgates a final rule that imposes substantial direct requirement costs on State and local Governments, preempts State law, or otherwise has Federalism implications. Since this regulation does not impose any costs on State or local Governments, preempt State or local law, or otherwise have Federalism implications, the requirements of Executive Order 13132 are not applicable.

B. Paperwork Reduction Act

In the proposed rule, pursuant to the Paperwork Reduction Act, we solicited public comments for 60 days on each of the following issues regarding information collection requirements (ICRs). No comments were received on these issues. For the purpose of this final rule, we are soliciting public comment for 30 days for the following sections of this rule regarding ICRs:

- The need for the information collection and its usefulness in carrying out the proper functions of our agency;
- the accuracy of our estimate of the information collection burden;
- the quality, utility, and clarity of the information to be collected; and
- recommendations to minimize the information collection burden on the

affected public, including automated collection techniques.

1. ICRs Regarding the Annual Report (§ 1007.17)

Section 1007.17 states that all costs expended in a given year by MFCUs attributed to data mining activities must be included as part of their existing annual report, including the amount of staff time devoted to data mining activities; the amount of staff time devoted to data mining activities; the number of case generated from those activities; the outcome and status of those cases, including the expected and actual monetary recoveries (both Federal and non-Federal share); and any other relevant indicia of return on investment from such activities.

The burden associated with the requirements in 1007.17 is expected to be minimal because MFCUs have existing systems in place to track their activities, including costs, staff time, and status and outcomes. The burden associated with this requirement is the time and effort necessary to track and calculate information to be included in their annual report. We estimate that it will take each state approximately one additional hour per year to comply with these requirements. We arrived at this estimate after consulting with Florida's MFCU, which since 2010 has a waiver to conduct data mining. We estimate that MFCU participation in data mining activities will be at a ''medium'' level, or at about 20 units. The burden associated with the existing annual report requirement contained in § 1007.17 is approved under existing OMB Control Number (OCN) 0990–0162.

Table 2 indicates the paperwork burden associated with the requirements of this final rule.

Regulation section	OMB Control No.	Respondents	Responses per respondent	Burden per response (hours)	Total annual burden (hours)	Hourly labor cost of reporting ($)	Total labor cost of reporting	Total cost ($)
1007.17	0990–0162	20	1	88	1760	23.39	102,916	102,916

Please submit any comments you may have on these information collection and recordkeeping requirements to the Office of Information and Regulatory Affairs, Office of Management and Budget, Attention: OIG Desk Officer, [OIG–1203–F], Fax: (202) 395–5806; or Email: *OIRA-submission@omb.eop.gov.*

List of Subjects in 42 CFR Part 1007

Administrative practice and procedure, Fraud, Grant programs—health, Medicaid, Reporting and recordkeeping requirements.

For the reasons set forth in the preamble, OIG amends 42 CFR part 1007, as set forth below:

PART 1007—[AMENDED]

■ 1. Revise the authority citation to part 1007 to read as follows:

Authority: 42 U.S.C. 1396b(a)(6), 1396(b)(3), 1396b(q), and 1302.

■ 2. In § 1007.1, add in alphabetical order, the definition for ''data mining'' to read as follows:

§ 1007.1 Definitions.

* * * * *

Data mining is defined as the practice of electronically sorting Medicaid or other relevant data, including but not limited to the use of statistical models and intelligent technologies, to uncover patterns and relationships within that data to identify aberrant utilization, billing, or other practices that are potentially fraudulent.

* * * * *

■ 3. In § 1007.17, add paragraph (i) to read as follows:

§ 1007.17 Annual report.

* * * * *

(i) For those MFCUs approved to conduct data mining under § 1007.20, all costs expended that year by the MFCU attributed to data mining activities; the amount of staff time devoted to data mining activities; the number of cases generated from those activities; the outcome and status of those cases, including the expected and actual monetary recoveries (both Federal and non-Federal share); and any other relevant indicia of return on investment from such activities.

■ 4. In § 1007.19, revise paragraph (e)(2) to read as follows:

§ 1007.19 Federal financial participation (FFP).

* * * * *

(e) * * *

(2) Routine verification with beneficiaries of whether services billed by providers were actually received, or, except as provided in § 1007.20, efforts to identify situations in which a question of fraud may exist, including the screening of claims and analysis of patterns of practice that involve data mining as defined in § 1007.1;

* * * * *

■ 5. Add § 1007.20 to read as follows:

§ 1007.20 Circumstances in which data mining is permissible and approval by HHS Office of Inspector General.

(a) Notwithstanding § 1007.19(e)(2), a MFCU may engage in data mining as defined in this part and receive Federal financial participation only under the following conditions:

(1) The MFCU identifies the methods of coordination between the MFCU and State Medicaid agency, the individuals serving as primary points of contact for data mining, as well as the contact information, title, and office of such individuals;

(2) MFCU employees engaged in data mining receive specialized training in data mining techniques;

(3) The MFCU describes how it will comply with paragraphs (a)(1) and (2) of this section as part of the agreement required by § 1007.9(d); and

(4) The Office of Inspector General, Department of Health and Human Services, in consultation with the Centers for Medicare & Medicaid Services, approves in advance the provisions of the agreement as defined in paragraph (a)(3) of this section.

(i) OIG will act on a request from a MFCU for review and approval of the agreement within 90 days after receipt of a written request or the request shall be considered approved if OIG fails to respond within 90 days after receipt of the written request.

(ii) If OIG requests additional information in writing, the 90-day period for OIG action on the request begins on the day OIG receives the information from the MFCU.

(iii) The approval is for 3 years.

(iv) A MFCU may request renewal of its data mining approval for additional 3-year periods by submitting a written request for renewal to OIG, along with an updated agreement with the State Medicaid agency.

(b) [Reserved]

Dated: January 2, 2013.

Daniel R. Levinson,

Inspector General.

Dated: January 17, 2013.

Kathleen Sebelius,

Secretary, Department of Health and Human Services.

[FR Doc. 2013–11735 Filed 5–16–13; 8:45 am]

BILLING CODE 4152–01–P

FEDERAL COMMUNICATIONS COMMISSION

47 CFR Part 2

[WT Docket No. 10–4; FCC 13–21]

Signal Booster Rules

AGENCY: Federal Communications Commission.

ACTION: Final rule; correcting amendment.

SUMMARY: The Federal Communications Commission published in the **Federal Register** of 78 FR 21555, April 11, 2013, a document in the Signal Boosters proceeding, WT Docket No. 10–4, which included Final Rules that reflected the amendments adopted of certain rules. This document corrects the amendment of one of those sections.

DATES: Effective May 17, 2013.

FOR FURTHER INFORMATION CONTACT: Joyce Jones, Mobility Division, Wireless Telecommunications Bureau, (202) 418–1327, TTY (202) 418–7233.

SUPPLEMENTARY INFORMATION: The Federal Communications Commission published a document in the **Federal Register** of 78 FR 21555, April 11, 2013 regarding certain FCC rules governing radiofrequency radiation exposure evaluation for mobile devices. The document amended a number of FCC rules concerning signal boosters for consumer and industrial use. This document corrects a certain rule in the document published in the **Federal Register** of 78 FR 21555, April 11, 2013. This document does not change any of the other rule amendments set forth in the document published in the **Federal Register** of 78 FR 21555, April 11, 2013.

List of Subjects in 47 CFR part 2

Frequency allocations and radio treaty matters; general rules and regulations.

Federal Communications Commission.

Marlene H. Dortch,

Secretary.

Rule Changes

Accordingly, 47 CFR part 2 is corrected by making the following correcting amendments:

PART 2—FREQUENCY ALLOCATIONS AND RADIO TREATY MATTERS; GENERAL RULES AND REGULATIONS

■ 1. The authority citation for part 2 continues to read as follows:

Authority: 47 U.S.C. 154, 302A, 303, and 336, unless otherwise noted.

■ 2. Section 2.1091 is amended by revising the first sentence in paragraph (c) to read as follows:

§ 2.1091 Radiofrequency radiation exposure evaluation: mobile devices.

* * * * *

(c) Mobile devices that operate in the Commercial Mobile Radio Services pursuant to part 20 of this chapter; the Cellular Radiotelephone Service pursuant to part 22 of this chapter; the Personal Communications Services pursuant to part 24 of this chapter; the Satellite Communications Services pursuant to part 25 of this chapter; the Miscellaneous Wireless Communications Services pursuant to part 27 of this chapter; the Maritime Services (ship earth station devices only) pursuant to part 80 of this chapter; and the Specialized Mobile Radio Service, and the 3650 MHz Wireless Broadband Service pursuant to part 90 of this chapter are subject to routine environmental evaluation for RF exposure prior to equipment authorization or use if they operate at frequencies of 1.5 GHz or below and their effective radiated power (ERP) is 1.5 watts or more, or if they operate at frequencies above 1.5 GHz and their ERP is 3 watts or more. * * *

* * * * *

[FR Doc. 2013–11444 Filed 5–16–13; 8:45 am]

BILLING CODE 6712–01–P

FEDERAL COMMUNICATIONS COMMISSION

47 CFR Part 25

[IB Docket No. 06–154; FCC 12–116]

2006 Biennial Regulatory Review

AGENCY: Federal Communications Commission.

ACTION: Correcting amendments.

SUMMARY: The Federal Communications Commission published a document in the **Federal Register** on February 6, 2013 (78 FR 8417), revising Commission rules. This document corrects the final regulation by revising certain provisions.

DATES: Effective on May 17, 2013.

FOR FURTHER INFORMATION CONTACT: William Bell, Satellite Division, International Bureau, at 202–418–0741 or via email at *William.Bell@fcc.gov*.

SUPPLEMENTARY INFORMATION: The Federal Communications Commission published a rule on February 6, 2013 which became effective on March 8, 2013. That document listed incorrect cross-references in the introductory text in § 25.221(b) and, due to paragraph mis-numbering, inadvertently replaced § 25.221(a)(7), which should not have been changed, with a slightly revised version of the text in § 25.221(a)(8).

List of Subjects in 47 CFR Part 25

Satellites and telecommunications.

Federal Communications Commission.

Marlene H. Dortch,

Secretary.

Accordingly, 47 CFR part 25 is corrected by making the following corrective amendments:

PART 25—SATELLITE COMMUNICATIONS

■ 1. The authority citation for part 25 continues to read as follows:

Authority: Interprets or applies Sections 4, 301, 302, 303, 307, 309, 332, and 705 of the Communications Act, as amended, 47 U.S.C. Sections 154, 301, 302, 303, 307, 309, 332, and 705, unless otherwise noted.

■ 2. In § 25.221, revise paragraphs (a)(7) and (8), and paragraph (b) introductory text to read as follows:

§ 25.221 Blanket Licensing provisions for Earth Stations on Vessels (ESVs) receiving in the 3700–4200 MHz (space-to-Earth) frequency band and transmitting in the 5925–6425 MHz (Earth-to-space) frequency band, operating with Geostationary Satellite Orbit (GSO) Satellites in the Fixed-Satellite Service.

(a) * * *

(7) ESV operators shall control all ESVs by a hub earth station located in the United States, except that an ESV on U.S.-registered vessels may operate under control of a hub earth station location outside the United States provided the ESV operator maintains a point of contact within the United States that will have the capability and authority to cause an ESV on a U.S.-registered vessel to cease transmitting if necessary.

(8) ESV operators transmitting in the 5925–6425 MHz (Earth-to-space) frequency band to GSO satellites in the Fixed-Satellite Service (FSS) shall not seek to coordinate, in any geographic location, more than 36 megahertz of uplink bandwidth on each of no more than two GSO FSS satellites.

* * * * *

(b) Applications for ESV operation in the 5925–6425 MHz (Earth-to-space) band to GSO satellites in the Fixed-Satellite Service must include, in addition to the particulars of operation identified on Form 312 and associated Schedule B, the applicable technical demonstrations in paragraphs (b)(1), (b)(2) or (b)(3) of this section and the

documentation identified in paragraphs (b)(4) through (b)(7) of this section.

* * * * *

[FR Doc. 2013–11442 Filed 5–16–13; 8:45 am]

BILLING CODE 6712–01–P

FEDERAL COMMUNICATIONS COMMISSION

47 CFR Part 54

[WC Docket Nos. 10–90; DA 13–598]

Survey of Urban Rates for Fixed Voice and Fixed Broadband Residential Services

AGENCY: Federal Communications Commission.

ACTION: Final rule.

SUMMARY: In this document, the Wireline Competition Bureau and the Wireless Telecommunications Bureau adopt the form and content for a survey of urban rates for fixed voice and fixed broadband residential services, which the Commission will use to implement universal service reforms adopted as part of the *USF/ICC Transformation Order.*

DATES: Effective May 17, 2013. This *Order* contains information collection requirements that have not been approved by the Office of Management and Budget (OMB). The Commission will publish a separate document in the **Federal Register** announcing their effective dates.

ADDRESSES: Federal Communications Commission, 445 12th Street SW., Washington, DC 20554.

FOR FURTHER INFORMATION CONTACT: Suzanne Yelen, Assistant Division Chief, at 202–418–0626, Industry Analysis & Technology Division, Wireline Competition Bureau. For additional information concerning the PRA information collection requirements contained in this document, send an email to *PRA@fcc.gov* or contact Judith B. Herman at 202–418–0214.

SUPPLEMENTARY INFORMATION: This is a summary of the Bureau's *Urban Rates Survey Order* in WC Docket No. 10–90; DA 13–598, released on April 3, 2013. The full text of this document is available for public inspection during regular business hours in the FCC Reference Center, Room CY–A257, 445 12th Street SW., Washington, DC 20554, and may also be purchased from the Commission's copy contractor, BCPI, Inc., Portals II, 445 Twelfth Street SW., Room CY–B402, Washington, DC 20554. Customers may contact BCPI, Inc. via their Web site, *http://www.bcpi.com*, or call 1–800–378–3160. This document is available in alternative formats (computer diskette, large print, audio record, and Braille). Persons with disabilities who need documents in these formats may contact the FCC by email: *FCC504@fcc.gov* or phone: 202–418–0530 or TTY: 202–418–0432.

Synopsis of Reconsideration Order

1. On November 18, 2011, the Commission released the *USF/ICC Transformation Order and FNPRM,* 76 FR 73830, November 29, 2011, which comprehensively reforms and modernizes the universal service and intercarrier compensation systems. In that *Order,* the Commission directed the Wireline Competition Bureau and Wireless Telecommunications Bureau (Bureaus) to conduct a survey of residential urban rates for voice services. Specifically, the Commission directed the Bureaus to ''develop a methodology to survey a representative sample of facilities-based fixed voice service providers taking into account the relative categories of fixed voice providers as determined in the most recent FCC Form 477 data collection.'' The Commission also delegated ''authority to conduct an annual survey of urban broadband rates, if necessary, in order to derive a national range of rates for broadband service'' and ''to monitor urban broadband offerings, including by conducting an annual survey, in order to specify an appropriate minimum for usage allowances and to adjust such a minimum over time.'' In the accompanying *FNPRM,* the Commission sought comment on various issues associated with determining reasonable comparability for voice and broadband rates.

2. In response to the Commission's direction, the Wireline Competition Bureau (Bureau) released a Public Notice, 77 FR 52279, August 29, 2012, seeking comment on the format and content of a proposed survey of urban rates for fixed voice and fixed broadband residential services. The Bureau also sought to further develop the record on how we could use the data collected in the survey to determine the local voice rate floor and the reasonable comparability benchmarks for fixed voice and fixed broadband services.

3. In the *USF/ICC Transformation Order and FNPRM,* the Commission asked if it should ''separately collect data on fixed and mobile voice telephony rates.'' In the Public Notice, we sought more detailed comment specifically on the development of a survey for fixed services. We now adopt a survey that collects data for fixed services.

4. We adopt a fixed-services specific survey because we have decided not to create a national average urban rate that represents a blended rate derived from both fixed and mobile data. We conclude that the differences in rate plans and other attributes of fixed and mobile services would make it inordinately difficult to create a unified benchmark. Accounting for all of these differences would require collecting substantial additional information as well as making numerous assumptions that could greatly complicate the development of the national average. For example, fixed and mobile voice offerings often differ in pricing structure, with fixed voice providers charging for unlimited calling in the local calling area and mobile providers charging for a bucket of any-distance minutes. Similarly, fixed and mobile broadband offerings typically differ substantially in speed and capacity allowances. Generating a blended fixed and mobile rate would require accounting for the various innate properties of each service to make them ''comparable.'' Such a comparison would require assumptions about which service characteristics might be adjusted, and collection and analysis of data to understand customers' valuation of such characteristics, both of which would be resource intensive.

5. In other respects, the Bureaus are continuing to consider the best approach to implementing the reasonable comparability requirements with respect to supported fixed and mobile services. In particular, some nationwide providers have argued that they should be able to meet the Commission's reasonable comparability benchmarks by certifying that they charge the same prices in rural as urban areas. We will address such arguments in a future order.

6. Because we anticipate announcing reasonable comparability benchmarks derived from survey data after the deadline for the July 1, 2013 ETC annual reports, ETCs (both fixed and mobile) subject to section 54.313 of the Commission's rules are not expected to make any certification that their voice service rates are reasonably comparable to the national average urban voice rate, as required in section 54.313(a)(10), in their 2013 annual reports. Instead, this requirement will be initially implemented in the 2014 annual reports.

7. *Survey Format and Sample Selection.* As proposed in the Public Notice, we intend to implement this survey through an online reporting form

accessible to those urban providers of fixed voice and broadband services that are chosen to participate. The Administrator, the Universal Service Administrative Company, may assist in administering the survey. We will select urban providers using FCC Form 477 data so as to create a statistically valid sample that is representative of the relative proportion of fixed terrestrial providers for the purpose of setting a reasonable comparability benchmark for fixed voice and fixed broadband services and a rate floor for fixed voice service. Separate, independent samples will be chosen for the fixed voice and fixed broadband sections of the survey. As further proposed in the Public Notice, we will survey a statistically valid sample generated from all fixed terrestrial providers—regardless of regulatory status or technology—that serve urban census tracts in Metropolitan Statistical Areas (MSAs) across the country. We will direct each provider chosen as part of the sample to indicate prices it charges within the identified Census tract.

8. Although no commenters objected to this approach, the National Exchange Carrier Association, the National Telecommunications Cooperative Association, the Organization for the Promotion and Advancement of Small Telecommunications Companies, Eastern Rural Telecom Association, and the Western Telecommunications Alliance (together, NECA) urge the us to include within the survey sample in each MSA all types of providers, including providers that serve the whole MSA and providers that serve only a portion of the MSA. We agree. As proposed in the Public Notice, we will survey a statistically valid sample generated from all fixed terrestrial providers in each MSA, and we will not exclude providers based on the size of their service area within an MSA.

9. Consistent with our proposal in the Public Notice, we define ''urban'' for the purposes of this survey as all 2010 Census urban areas and urban clusters that sit within an MSA, which includes approximately 70–80 percent of the U.S. population. We will use Commission data, primarily collected from Form 477 submissions, to determine which providers are serving urban census tracts—this is the most efficient way to identify service providers in particular areas. No commenter objected to this proposal. As further proposed in the Public Notice, we will provide hyperlinks in the survey instrument so the respondent can easily associate the Census tract specified in the survey with a physical location within the respondent's service area.

10. We require that a provider with multiple operating companies within the same Census tract answer the survey questions for each operating company. One commenter requests that a survey respondent need only report data for one operating company in those cases where the survey respondent has more than one operating company in a particular tract. We are concerned, however, that allowing survey respondents to select from among multiple operating companies to report data could inadvertently introduce statistical bias in the survey results. Once survey results have been collected, we will select from among the reported companies in each Census tract in a manner that maintains statistical integrity.

11. As suggested by AT&T, we include language in the survey instructions specifying that providers should include in their responses information regarding all-distance voice services and broadband services even if those services are provided not just by the respondent, but by the respondent and an affiliate. Particularly for local telephone operating companies, there may be numerous instances in which these entities provide all-distance voice service plans and/or broadband services in conjunction with an affiliate and failing to capture these offerings could result in substantially incomplete data.

12. *Fixed Voice Offerings (Types of services).* As proposed in the Public Notice, we require providers to report separately stand-alone, non-discounted rates for their unlimited or flat-rate local service, unlimited all distance service, and measured or messaged local service. If the provider does not offer any of these services, it would indicate this and not report data for that category. No commenter disagreed with this proposal. In addition, as the Wireline Competition Bureau proposed, we require data for circuit switched and facilities-based VoIP services to be collected separately. Further, we state explicitly in the instructions that grandfathered services and pricing are not to be reported in the survey.

13. *Fixed Voice Offerings (Bundled services).* We decline to include bundled pricing in the survey at this time. In response to the Public Notice, NECA suggests that the survey also should collect data on separately-identified service rates in bundled service offerings. NECA argues that the majority of customers now purchase bundles and that because bundled rates are generally lower than a la carte rates, excluding bundles could create an inflated rate floor. Although we recognize that consumers may pay somewhat lower rates for fixed voice services when those services are purchased as part of a bundle, carriers today typically have discretion in how they allocate the price of a bundle among the services making up the bundle. Companies may base these allocations on regulatory requirements, state and local tax requirements or company-specific marketing initiatives. We are concerned about developing a rate floor and benchmark based on carrier self-reported allocations using inconsistent methodologies. Moreover, in the *USF/ICC Transformation Order,* the Commission specifically adopted a minimum rate floor ''to avoid over-subsidizing carriers whose intrastate rates are not minimally reasonable.'' Because bundles are marketing devices used to induce consumers to purchase additional services based on a discount, benchmarks set based on these prices could be artificially low. We note that the Commission has used data for stand-alone fixed-only service for its rate benchmark in the past.

14. *Fixed Voice Offerings (Non-recurring charges).* We will collect information regarding non-recurring charges in the initial survey and will determine whether to include this data as part of the benchmark after the survey results have been examined. Some commenters suggest we should not include these charges because such fees are ''associated with initiating, extending, modifying, restoring, or repairing service, but are not the fees for the service itself, differ by customer location and other factors that makes including them complex, and are directly linked to marketing plans and are often waived. We agree that such fees can differ substantially among customers depending on location and other factors and that including these charges will add complexity to the survey. Further, we are mindful that non-recurring charges are often part of marketing strategies and may be waived or discounted in order to attract customers. However, we are concerned that there may be cases in which providers offer high non-recurring charges in combination with low recurring charges or allow consumers to pay non-recurring charges on a monthly basis, and that excluding non-recurring charges from the survey would restrict the Bureaus' ability to evaluate whether such charges would materially impact the outcome when setting the rate floor and reasonable comparability benchmarks.

15. *Fixed Voice Offerings (Recurring charges).* In the *USF/ICC Transformation Order,* the Commission determined that the rate floor should be

based upon ''end-user rates plus state regulated fees (specifically, state SLCs, state universal service fees, and mandatory extended area service charges).'' Therefore, notwithstanding arguments that fees, taxes, and surcharges beyond the provider's control should not be included in the survey, we are required to collect data on state SLCs, state universal service fees, and mandatory extended area service (EAS) charges. We conclude that there is a value in collecting information on such fees as individual line items on the survey in order to monitor over time the extent to which states impose fees for state universal service funds and mandatory EAS.

16. We have modified the proposed survey to include all other recurring surcharges, taxes, and Telecommunications Relay Service (TRS) charges as a single, aggregated survey question. This information is relevant to our development of reasonable comparability benchmarks. Although we acknowledge that these charges can vary by area and including them may raise the complexity of the survey somewhat, these charges may be a significant portion of customers' monthly bills. We decline to include touch tone charges as a separate item in the survey at this time. Several of the larger incumbent carriers eliminated separate touchtone charges more than a decade ago, and we are not aware of a sufficiently large number of providers charging separately for touch tone service today to warrant its inclusion as a separate entry. To the extent some providers still charge separately for touch tone, they should report such charges in the line entitled ''Total of all other surcharges, taxes, TRS, and touch tone charges.'' For multiple, customer-chosen EAS charges, we include language in the survey instructions to specify how the provider should separately report mandatory and voluntary EAS charges.

17. *Fixed Voice Offerings (Local calling areas).* We decline to collect information regarding calling area size and scope in the survey. Several commenters argue that the survey should gather this information because the typically smaller number of persons within a calling area in rural areas as compared to urban calling areas must be taken into account in calculating the rate floor. In adopting the rate floor rule, the Commission was seeking to ensure that consumers in high-cost areas pay some minimum amount to support the cost of the network before turning to the federal support mechanism, which ultimately is borne by consumers across the nation. As the Commission stated, ''we do not believe it is equitable for consumers across the country to subsidize the cost of service for some consumers that pay local service rates that are significantly lower than the national urban average.'' Calling areas (like local retail rates) are established by the states based on factors such as the attributes and needs of local communities and are not necessarily related to the cost of service. Considering local calling areas in the rate floor analysis would be inconsistent with the Commission's efforts to avoid subsidizing artificially low local rates.

18. *Fixed Voice Offerings (Multiple rate zones within Census tract).* We make a minor modification to the proposal in the Public Notice to address the situation in which providers may have multiple zones that have different rates and fees within a single Census tract. To avoid confusion or the possibility that providers will use varying methods to determine an average rate among multiple zones, we include in the survey instructions that indicate that if a provider has multiple rates or other fees/taxes within a single, surveyed Census tract, the provider should report all of the rates for that Census tract separately. The Bureau will then determine which rates should be included in the survey in a manner that will avoid introducing statistical bias.

19. *Fixed Broadband Offerings (Types of services).* We require providers to report all residential, non-discounted rates for all standalone service speeds above 200 kbps offered in the specified Census tract. This is a change from the original proposal that offerings be placed in one of four service tiers. We agree with commenters that the proposed categories in the Public Notice might not accommodate the variety of plans currently offered. The modified survey will ensure we have an understanding of the speeds available in the marketplace and will be easier for respondents to complete.

20. We conclude that requiring survey respondents to use the speed categories in FCC Form 477 would involve more time and resources for filers than necessary for the Bureau to fulfill its obligations. Although NECA claims that this will minimize the burden on providers, we are not persuaded. For Form 477, providers report existing subscriber counts for seventy-two download and upload speed combinations. Because Form 477 requires providers querying their existing customer databases for subscriber counts and the rate survey requires providers to report rates that would be offered to a hypothetical prospective customer, we see little reason to believe using the Form 477 speed tiers would reduce burden.

21. We conclude that requiring providers to report offerings both above and below the 4 Mbps down/1 Mbps up standard is necessary to fulfill our obligations. We disagree with the suggestions of several commenters that the Bureau should limit the survey to inquire solely about offerings near 4 Mbps down/1 Mbps up because only this speed is eligible for Connect America Fund support and all other offerings are therefore irrelevant or beyond the Commission's authority. In the *USF/ICC Transformation Order,* the Commission concluded that it ''must also lay the groundwork for longer-term evolution of CAF broadband obligations, as we expect technical capabilities and user needs will continue to evolve. We therefore commit to monitoring trends in the performance of urban broadband offerings through the survey data we will collect and rural broadband offerings through the reporting data we will collect.'' The Commission thus has directed the Bureaus to conduct a survey of not just services that are close to 4 Mbps down/1 Mbps up broadband standard, but also of trends in the broadband market. To fulfill this obligation, we must obtain information on a range of broadband speeds available in the market.

22. *Fixed Broadband Offerings (Capacity allowances).* We adopt our proposal that providers report on any capacity allowances and what actions are taken when the capacity allowance is exceeded. We specifically identified possible actions to include overage charges, blocking traffic, and rate limiting. No commenter objected to including capacity allowance in our survey, and we conclude that it is necessary to know the allowances (if any) associated with each service offering at a given price. We adopt the suggestion of the Alaska Rural Coalition that the Bureau also request information regarding provider roll-over offerings—''the provider practice of allowing customers to 'roll over' their unused capacity for a month to apply to future months of service.'' We agree that it would be useful to collect information on roll-over practices and add ''roll over'' as an option in the capacity allowance question.

23. *Fixed Broadband Offerings (Bundling, recurring, and non-recurring charges).* We conclude at this time that respondents will not be required to include in their survey responses rates for any service that cannot be purchased on a stand-alone basis. As explained above for voice service, determining how to allocate the price of a bundled

service among its components is difficult, and bundled service providers allocate pricing using different methodologies. Seeking data on prices for offerings not actually offered in the marketplace would likely skew the survey results.

24. We will collect information regarding non-recurring charges associated with broadband services and determine whether to include this data in the broadband benchmark once we have evaluated the initial survey results. We conclude it is reasonable to gain a better understanding of the total price that consumers are paying, including non-recurring charges, before setting the broadband comparability benchmark. Therefore, we will adopt the recurring taxes, fees, and surcharge questions as proposed in the Public Notice.

25. *Non-Filers.* We will contact directly any provider that is sent a survey notification that does not complete the online survey form within 30 days. Compliance with the rules adopted in this *Order* is mandatory, and failure to comply may lead to enforcement action, including forfeiture penalties, pursuant to the Communications Act of 1934, as amended, and other applicable law.

Filing Procedures

26. Once OMB has completed its review of the survey collection requirements adopted today, we will issue a public notice providing detailed instructions and announcing when the survey notifications will be distributed.

Congressional Review Act

27. The Commission will send a copy of this *Urban Rate Survey Order* in a report to be sent to Congress and the Government Accountability Office, pursuant to the Congressional Review Act.

Paperwork Reduction Act

28. This *Urban Rates Survey Order* contains new information collection requirements subject to the PRA. It will be submitted to OMB for review under section 3507(d) of the PRA. OMB, the general public, and other Federal agencies are invited to comment on the new information collection requirements contained in this proceeding.

Final Regulatory Flexibility Analysis

29. As required by the Regulatory Flexibility Act of 1980, as amended (RFA), an Initial Regulatory Flexibility Analysis (IRFA) was incorporated in the *Urban Rate Survey Public Notice.* The Bureau sought written public comment on the proposals in the *Urban Rates Survey Public Notice,* including comment on the IRFA. No comments were received addressing the IRFA. This present Final Regulatory Flexibility Analysis (FRFA) conforms to the RFA.

30. *Need for and Objective of the Order.* The *Order* adopts a survey of urban rates for fixed voice and fixed broadband residential services for purposes of implementing various reforms adopted as part of the *USF/ICC Transformation Order.* In the *USF/ICC Transformation Order,* the Commission comprehensively reformed universal service funding for high-cost, rural areas, adopting fiscally responsible, accountable, incentive-based policies to preserve and advance voice and broadband service. As discussed in the *Order,* the rate survey will be used to develop benchmarks and rate floors to insure supported providers' rates are not unreasonably high or unnecessarily low.

31. *Summary of Significant Issues Raised by Public Comments in Response to the IRFA.* No parties have raised significant issues in response to the IRFA.

32. *Response to Comments by the Chief Counsel for Advocacy of the Small Business Administration.* Pursuant to the Small Business Jobs Act of 2010, the Commission is required to respond to any comments filed by the Chief Counsel for Advocacy of the Small Business Administration (SBA), and to provide a detailed statement of any change made to the proposed rules as a result of those comments. The Chief Counsel did not file any comments in response to the proposed rules in this proceeding.

33. *Description and Estimate of the Number of Small Entities to Which the Adopted Rules Will Apply.* The RFA directs agencies to provide a description of, and, where feasible, an estimate of the number of small entities that may be affected by the rules and policies adopted herein. The RFA generally defines the term ''small entity'' as having the same meaning as the terms ''small business,'' ''small organization,'' and ''small governmental jurisdiction.'' In addition, the term ''small business'' has the same meaning as the term ''small business concern'' under the Small Business Act. A ''small business concern'' is one which: (1) Is independently owned and operated; (2) is not dominant in its field of operation; and (3) satisfies any additional criteria established by the SBA. Nationwide, there are a total of approximately 27.5 million small businesses, according to the SBA.

34. *Small Business.* Nationwide, there are a total of approximately 27.5 million small businesses, according to the SBA.

35. *Wired Telecommunications Carriers.* The SBA has developed a small business size standard for Wired Telecommunications Carriers, which consists of all such companies having 1,500 or fewer employees. According to Census Bureau data for 2007, there were 3,188 firms in this category, total, that operated for the entire year. Of this total, 3144 firms had employment of 999 or fewer employees, and 44 firms had employment of 1000 employees or more. Thus, under this size standard, the majority of firms can be considered small.

36. *Local Exchange Carriers (LECs).* Neither the Commission nor the SBA has developed a size standard for small businesses specifically applicable to local exchange services. The closest applicable size standard under SBA rules is for Wired Telecommunications Carriers. Under that size standard, such a business is small if it has 1,500 or fewer employees. According to Commission data, 1,307 carriers reported that they were incumbent local exchange service providers. Of these 1,307 carriers, an estimated 1,006 have 1,500 or fewer employees and 301 have more than 1,500 employees. Consequently, the Commission estimates that most providers of local exchange service are small entities that may be affected by the rules and policies adopted in the *Order.*

37. *Incumbent Local Exchange Carriers (incumbent LECs).* Neither the Commission nor the SBA has developed a size standard for small businesses specifically applicable to incumbent local exchange services. The closest applicable size standard under SBA rules is for Wired Telecommunications Carriers. Under that size standard, such a business is small if it has 1,500 or fewer employees. According to Commission data, 1,307 carriers reported that they were incumbent local exchange service providers. Of these 1,307 carriers, an estimated 1,006 have 1,500 or fewer employees and 301 have more than 1,500 employees. Consequently, the Commission estimates that most providers of incumbent local exchange service are small businesses that may be affected by rules adopted in the *Order.*

38. *Competitive Local Exchange Carriers (competitive LECs), Competitive Access Providers (CAPs), Shared-Tenant Service Providers, and Other Local Service Providers.* Neither the Commission nor the SBA has developed a small business size standard specifically for these service providers. The appropriate size standard under SBA rules is for the category Wired Telecommunications Carriers. Under

that size standard, such a business is small if it has 1,500 or fewer employees. According to Commission data, 1,442 carriers reported that they were engaged in the provision of either competitive local exchange services or competitive access provider services. Of these 1,442 carriers, an estimated 1,256 have 1,500 or fewer employees and 186 have more than 1,500 employees. In addition, 17 carriers have reported that they are Shared-Tenant Service Providers, and all 17 are estimated to have 1,500 or fewer employees. In addition, 72 carriers have reported that they are Other Local Service Providers. Of the 72, seventy have 1,500 or fewer employees and two have more than 1,500 employees. Consequently, the Commission estimates that most providers of competitive local exchange service, competitive access providers, Shared-Tenant Service Providers, and Other Local Service Providers are small entities that may be affected by rules adopted pursuant to the Order.

39. *Wireless Telecommunications Carriers (except Satellite).* Since 2007, the SBA has recognized wireless firms within this new, broad, economic census category. Prior to that time, such firms were within the now-superseded categories of Paging and Cellular and Other Wireless Telecommunications. Under the present and prior categories, the SBA has deemed a wireless business to be small if it has 1,500 or fewer employees. For this category, census data for 2007 show that there were 1,383 firms that operated for the entire year. Of this total, 1,368 firms had employment of 999 or fewer employees and 15 had employment of 1000 employees or more. Similarly, according to Commission data, 413 carriers reported that they were engaged in the provision of wireless telephony, including cellular service, Personal Communications Service (PCS), and Specialized Mobile Radio (SMR) Telephony services. Of these, an estimated 261 have 1,500 or fewer employees and 152 have more than 1,500 employees. Consequently, the Commission estimates that approximately half or more of these firms can be considered small. Thus, using available data, we estimate that the majority of wireless firms can be considered small.

40. *Local Multipoint Distribution Service.* Local Multipoint Distribution Service (''LMDS'') is a fixed broadband point-to-multipoint microwave service that provides for two-way video telecommunications. The auction of the 986 LMDS licenses began and closed in 1998. The Commission established a small business size standard for LMDS licenses as an entity that has average gross revenues of less than $40 million in the three previous calendar years. An additional small business size standard for ''very small business'' was added as an entity that, together with its affiliates, has average gross revenues of not more than $15 million for the preceding three calendar years. The SBA has approved these small business size standards in the context of LMDS auctions. There were 93 winning bidders that qualified as small entities in the LMDS auctions. A total of 93 small and very small business bidders won approximately 277 A Block licenses and 387 B Block licenses. In 1999, the Commission re-auctioned 161 licenses; there were 32 small and very small businesses winning that won 119 license.

41. *Cable and Other Program Distribution.* Since 2007, these services have been defined within the broad economic census category of Wired Telecommunications Carriers; that category is defined as follows: ''This industry comprises establishments primarily engaged in operating and/or providing access to transmission facilities and infrastructure that they own and/or lease for the transmission of voice, data, text, sound, and video using wired telecommunications networks. Transmission facilities may be based on a single technology or a combination of technologies.'' The SBA has developed a small business size standard for this category, which is: all such firms having 1,500 or fewer employees. According to Census Bureau data for 2007, there were a total of 955 firms in this previous category that operated for the entire year. Of this total, 939 firms had employment of 999 or fewer employees, and 16 firms had employment of 1000 employees or more. Thus, under this size standard, the majority of firms can be considered small and may be affected by rules adopted pursuant to the *Order.*

42. *Cable Companies and Systems.* The Commission has developed its own small business size standards, for the purpose of cable rate regulation. Under the Commission's rules, a ''small cable company'' is one serving 400,000 or fewer subscribers, nationwide. Industry data indicate that, of 1,076 cable operators nationwide, all but eleven are small under this size standard. In addition, under the Commission's rules, a ''small system'' is a cable system serving 15,000 or fewer subscribers. Industry data indicate that, of 7,208 systems nationwide, 6,139 systems have under 10,000 subscribers, and an additional 379 systems have 10,000–19,999 subscribers. Thus, under this second size standard, most cable systems are small and may be affected by rules adopted pursuant to the *Order.*

43. *Cable System Operators.* The Act also contains a size standard for small cable system operators, which is ''a cable operator that, directly or through an affiliate, serves in the aggregate fewer than 1 percent of all subscribers in the United States and is not affiliated with any entity or entities whose gross annual revenues in the aggregate exceed $250,000,000.'' The Commission has determined that an operator serving fewer than 677,000 subscribers shall be deemed a small operator, if its annual revenues, when combined with the total annual revenues of all its affiliates, do not exceed $250 million in the aggregate. Industry data indicate that, of 1,076 cable operators nationwide, all but ten are small under this size standard. We note that the Commission neither requests nor collects information on whether cable system operators are affiliated with entities whose gross annual revenues exceed $250 million, and therefore we are unable to estimate more accurately the number of cable system operators that would qualify as small under this size standard.

44. *Open Video Services.* The open video system (''OVS'') framework was established in 1996, and is one of four statutorily recognized options for the provision of video programming services by local exchange carriers. The OVS framework provides opportunities for the distribution of video programming other than through cable systems. Because OVS operators provide subscription services, OVS falls within the SBA small business size standard covering cable services, which is ''Wired Telecommunications Carriers.'' The SBA has developed a small business size standard for this category, which is: all such firms having 1,500 or fewer employees. According to Census Bureau data for 2007, there were a total of 955 firms in this previous category that operated for the entire year. Of this total, 939 firms had employment of 999 or fewer employees, and 16 firms had employment of 1000 employees or more. Thus, under this second size standard, most OVS operators are small and may be affected by rules adopted pursuant to the *Order.* In addition, we note that the Commission has certified some OVS operators, with some now providing service. Broadband service providers (''BSPs'') are currently the only significant holders of OVS certifications or local OVS franchises. The Commission does not have financial or employment information regarding the entities authorized to provide OVS, some of which may not yet be operational. Thus, again, at least

some of the OVS operators may qualify as small entities.

45. *Internet Service Providers.* Since 2007, these services have been defined within the broad economic census category of Wired Telecommunications Carriers; that category is defined as follows: ''This industry comprises establishments primarily engaged in operating and/or providing access to transmission facilities and infrastructure that they own and/or lease for the transmission of voice, data, text, sound, and video using wired telecommunications networks. Transmission facilities may be based on a single technology or a combination of technologies.'' The SBA has developed a small business size standard for this category, which is: all such firms having 1,500 or fewer employees. According to Census Bureau data for 2007, there were 3,188 firms in this category, total, that operated for the entire year. Of this total, 3144 firms had employment of 999 or fewer employees, and 44 firms had employment of 1000 employees or more. Thus, under this size standard, the majority of firms can be considered small. In addition, according to Census Bureau data for 2007, there were a total of 396 firms in the category Internet Service Providers (broadband) that operated for the entire year. Of this total, 394 firms had employment of 999 or fewer employees, and two firms had employment of 1000 employees or more. Consequently, we estimate that the majority of these firms are small entities that may be affected by rules adopted pursuant to the *Order*.

46. *Description of Projected Reporting, Recordkeeping and Other Compliance Requirements.* In the *Order,* the Bureau adopts a survey of urban rates for fixed voice and fixed broadband residential services. Specifically, it requires reporting by a number of entities that are included in the sample, including some small entities, of advertised rates and product offerings.

47. *Steps Taken to Minimize Significant Economic Impact on Small Entities, and Significant Alternatives Considered.* The RFA requires an agency to describe any significant alternatives that it has considered in reaching its proposed approach, which may include the following four alternatives (among others): (1) The establishment of differing compliance or reporting requirements or timetables that take into account the resources available to small entities; (2) the clarification, consolidation, or simplification of compliance or reporting requirements under the rule for small entities; (3) the use of performance, rather than design, standards; and (4) an exemption from coverage of the rule, or any part thereof, for small entities.

48. The requirements adopted in the *Order* comprise an efficient data collection process that imposes the smallest burden on fixed voice and fixed broadband providers that still allows the Commission to gather the necessary data to meet the goals of the *USF/ICC Transformation Order.* The rate survey is not anticipated to have a significant economic impact on small entities because the survey will only sample a small number of providers. Furthermore, since the statistical sampling methodology will result in larger entities being more likely to be surveyed, we anticipate small entities will only compose a minor portion of the overall sample. Moreover, the survey only asks about advertised rates and product offerings which should be readily available to entities of any size. Furthermore, any significant economic impact cannot necessarily be minimized through alternatives since the survey sample will already be restricted to a small set of the total population of carriers necessary for generating a statistically valid sample, and the survey will only ask for readily available advertised rates and will be implemented in an easily accessible online format.

49. *Report to Congress.* The Commission will send a copy of the *Order,* including this FRFA, in a report to Congress pursuant to the Congressional Review Act. In addition, the Commission will send a copy of the *Order,* including this FRFA, to the Chief Counsel for Advocacy of the SBA.

Ordering Clauses

50. Accordingly, *it is ordered,* pursuant to sections 1, 2, 4(i), 5, 201–205, 218–220, 254, 303(r), and 403 of the Communications Act of 1934, as amended, 47 U.S.C. 151, 152, 154(i), 155, 201–205, 218–220, 254, 303(r), and 403, sections 0.91, 0.131, 0.201(d), 0.291, 0.331 and 1.427 of the Commission's rules, 47 CFR 0.91, 0.131, 0.201(d), 0.291, 0.331, 1.427, and the delegations of authority in paragraphs 85, 99, 106, 114, and 246 of the *USF/ICC Transformation Order,* FCC 11–161, that this Order *is adopted.*

51. *It is further ordered* that this Order *shall be effective* thirty (30) days after publication in the **Federal Register**, except for the requirements contained in paragraphs 11–13, 15–17, 19–20, 23, and 25–26, and Appendix A, which are subject to the Paperwork Reduction Act (PRA). These requirements include new or modified information collection requirements that require approval by the Office of Management and Budget under the PRA, and *shall become effective* after the Commission publishes a notice in the **Federal Register** announcing such approval and the relevant effective date(s).

52. *It is further ordered* that the Commission's Consumer and Governmental Affairs Bureau, Reference Information Center, *shall send* a copy of this *Order,* including the Final Regulatory Flexibility Analysis, to the Chief Counsel for Advocacy of the Small Business Administration.

53. *It is further ordered* that the Commission *shall send* a copy of this *Order* to Congress and the Government Accountability Office pursuant to the Congressional Review Act, *see* 5 U.S.C. 801(a)(1)(A).

Federal Communications Commission.

Carol Mattey,

Deputy Bureau Chief, Wireline Competition Bureau.

Appendix A—Urban Rates Survey Form

I. Survey Respondent Information

Provider Name: (pre-populated by FCC)
Operating Company Name:
Provider FRN (used on MONTH DAY, YEAR Form 477):
Provider Study Area Code (if current USF recipient):
Name of Person Completing Form:
Contact Phone Number:
Contact Email Address:
Name of Certifying Official:
Certifying Official's Phone Number:
Certifying Official's Email Address:
Location for Which Reported Rates Apply: (pre-populated by FCC)

II. Fixed Voice Information

For each specified voice service offered within the Census tract on MONTH DAY, YEAR, respondents must report non-discounted recurring monthly rates and service initiation charges. Detailed instructions for each question section are provided in the particular section. Note that circuit-switched and VoIP service information should be reported separately as indicated.

II.a Rate and Charge Information

In some cases, multiple rates and or taxes/fees/surcharges may exist for the same service within the Census tract. If this occurs for the specified Census tract, respondents must report the least and most expensive total cost offerings. For example, if two different rates (or other surveyed amounts such as taxes) for flat-rate, local service are applicable to two different portions of the Census tract, then the respondent should indicate that multiple rates exist.

Do multiple rates and/or taxes, fees, surcharges exist for this service offering within the same specified Census tract?
For Circuit Switched (unlimited or flat-rate local service, unlimited all-distance

service, measured or messaged local service)
For VoIP (unlimited or flat-rate local service, unlimited all-distance service, measured or messaged local service)

II.a.1 Monthly Rates

For each service offered, report each component of the rate in dollar and cents amounts. If both circuit switched and VoIP service are offered, report information for both services. Reported monthly rates should be standard, non-discounted residential rates. If there are multiple rates or taxes/fees/surcharges for the same service offering in the specified Census tract (indicated by ''Yes'' in the previous question), report the least total monthly cost offering in Sections 11.a.1 and 11.a.2, and the greatest total monthly cost rates in Sections II.a.3 and II.a.4. If there is only one rate to report, use Sections 11.a.1 and 11.a.2. ''All-distance'' services include only domestic calling, not international.

Recurring service charge (without SLC)
For Circuit Switched (unlimited or flat-rate local service, unlimited all-distance service, measured or messaged local service)
For VoIP (unlimited or flat-rate local service, unlimited all-distance service, measured or messaged local service)
Federal subscriber line charge (SLC), if any
For Circuit Switched (unlimited or flat-rate local service, unlimited all-distance service, measured or messaged local service)
For VoIP (unlimited or flat-rate local service, unlimited all-distance service, measured or messaged local service)
Access Recovery Charge (ARC), if any
For Circuit Switched (unlimited or flat-rate local service, unlimited all-distance service, measured or messaged local service)
For VoIP (unlimited or flat-rate local service, unlimited all-distance service, measured or messaged local service)
State SLC, if any
For Circuit Switched (unlimited or flat-rate local service, unlimited all-distance service, measured or messaged local service)
For VoIP (unlimited or flat-rate local service, unlimited all-distance service, measured or messaged local service)
State USF charge, if any
For Circuit Switched (unlimited or flat-rate local service, unlimited all-distance service, measured or messaged local service)
For VoIP (unlimited or flat-rate local service, unlimited all-distance service, measured or messaged local service)
Mandatory extended area service (EAS) charges, if any
For Circuit Switched (unlimited or flat-rate local service, unlimited all-distance service, measured or messaged local service)
For VoIP (unlimited or flat-rate local service, unlimited all-distance service, measured or messaged local service)
Voluntary EAS charges, if any
For Circuit Switched (unlimited or flat-rate local service, unlimited all-distance service, measured or messaged local service)
For VoIP (unlimited or flat-rate local service, unlimited all-distance service, measured or messaged local service)
Total of all other surcharges, taxes, and TRS charges. (See instructions for a list of charges to be included.)
For Circuit Switched (unlimited or flat-rate local service, unlimited all-distance service, measured or messaged local service)
For VoIP (unlimited or flat-rate local service, unlimited all-distance service, measured or messaged local service)
Number of voice calls or message units included in monthly rate if measured service (local service area calls only)
For Circuit Switched (measured or messaged local service)
For VoIP (measured or messaged local service)
Dollar calling allowance for voice calls included in monthly rate if measured service (local service area calls only).
For Circuit Switched (measured or messaged local service)
For VoIP (measured or messaged local service)
Peak period local rate per unit (minute or call/message) once allowance exceed, if measured service.
For Circuit Switched (measured or messaged local service, indicate if rate is per call or per minute)
For VoIP Switched (measured or messaged local service, indicate if rate is per call or per minute)
Off-peak period local rate per unit (minute or call/message) once allowance exceeded, if measured service.
For Circuit Switched (measured or messaged local service, indicate if rate is per call or per minute)
For VoIP Switched (measured or messaged local service, indicate if rate is per call or per minute)

II.a.2 Service Initiation Charges

For each item listed, report the *minimum* non-discounted amount a customer would pay for each non-recurring charge. If an item is not offered by the carrier, then mark ''N/A.''

Total connection charge for residential service if no premises visit is required.
For Circuit Switched (unlimited or flat-rate local service, unlimited all-distance service, measured or messaged local service)
For VoIP (unlimited or flat-rate local service, unlimited all-distance service, measured or messaged local service)
Minimum additional charge if drop line and terminal block are needed to connect service. Do not include any inside wiring charges.
For Circuit Switched (unlimited or flat-rate local service, unlimited all-distance service, measured or messaged local service)
For VoIP (unlimited or flat-rate local service, unlimited all-distance service, measured or messaged local service)
Mandatory surcharges on connection accounted as company revenue
For Circuit Switched (unlimited or flat-rate local service, unlimited all-distance service, measured or messaged local service)
For VoIP (unlimited or flat-rate local service, unlimited all-distance service, measured or messaged local service)
State, county, and local taxes and surcharges on connection
For Circuit Switched (unlimited or flat-rate local service, unlimited all-distance service, measured or messaged local service)
For VoIP (unlimited or flat-rate local service, unlimited all-distance service, measured or messaged local service)
Other mandatory connection charges
For Circuit Switched (unlimited or flat-rate local service, unlimited all-distance service, measured or messaged local service)
For VoIP (unlimited or flat-rate local service, unlimited all-distance service, measured or messaged local service)

II.a.3 Monthly Rates (Use Only If Multiple Rates)

Only use the following rates and charges questions if reporting multiple rates and/or taxes/fees/surcharges for the same service in the same Census tract. Report rates and charges for the greatest total monthly cost offering.

Federal subscriber line charge (SLC), if any
For Circuit Switched (unlimited or flat-rate local service, unlimited all-distance service, measured or messaged local service)
For VoIP (unlimited or flat-rate local service, unlimited all-distance service, measured or messaged local service)
Access Recovery Charge (ARC), if any
For Circuit Switched (unlimited or flat-rate local service, unlimited all-distance service, measured or messaged local service)
For VoIP (unlimited or flat-rate local service, unlimited all-distance service, measured or messaged local service)
State SLC, if any
For Circuit Switched (unlimited or flat-rate local service, unlimited all-distance service, measured or messaged local service)
For VoIP (unlimited or flat-rate local service, unlimited all-distance service, measured or messaged local service)
State USF charge, if any
For Circuit Switched (unlimited or flat-rate local service, unlimited all-distance service, measured or messaged local service)
For VoIP (unlimited or flat-rate local service, unlimited all-distance service, measured or messaged local service)
Mandatory extended area service (EAS) charges, if any
For Circuit Switched (unlimited or flat-rate local service, unlimited all-distance service, measured or messaged local service)
For VoIP (unlimited or flat-rate local service, unlimited all-distance service, measured or messaged local service)
Voluntary EAS charges, if any
For Circuit Switched (unlimited or flat-rate local service, unlimited all-distance

service, measured or messaged local service)
For VoIP (unlimited or flat-rate local service, unlimited all-distance service, measured or messaged local service)
Total of all other surcharges, taxes, and TRS charges. (See instructions for a list of charges to be included.)
For Circuit Switched (unlimited or flat-rate local service, unlimited all-distance service, measured or messaged local service)
For VoIP (unlimited or flat-rate local service, unlimited all-distance service, measured or messaged local service)
Number of voice calls or message units included in monthly rate if measured service (local service area calls only)
For Circuit Switched (measured or messaged local service)
For VoIP (measured or messaged local service)
Dollar calling allowance for voice calls included in monthly rate if measured service (local service area calls only).
For Circuit Switched (measured or messaged local service)
For VoIP (measured or messaged local service)
Peak period local rate per unit (minute or call/message) once allowance exceed, if measured service.
For Circuit Switched (measured or messaged local service, indicate if rate is per call or per minute)
For VoIP Switched (measured or messaged local service, indicate if rate is per call or per minute)
Off-peak period local rate per unit (minute or call/message) once allowance exceeded, if measured service.
For Circuit Switched (measured or messaged local service, indicate if rate is per call or per minute)
For VoIP Switched (measured or messaged local service, indicate if rate is per call or per minute)

II.a.4 Service Initiation Charges (Use Only If Multiple Rates)

For each item listed, report the *minimum* non-discounted amount a customer would pay for each non-recurring charge. If an item is not offered by the carrier, then mark ''N/A.''

Total connection charge for residential service if no premises visit is required.
For Circuit Switched (unlimited or flat-rate local service, unlimited all-distance service, measured or messaged local service)
For VoIP (unlimited or flat-rate local service, unlimited all-distance service, measured or messaged local service)
Minimum additional charge if drop line and terminal block are needed to connect service. Do not include any inside wiring charges.
For Circuit Switched (unlimited or flat-rate local service, unlimited all-distance service, measured or messaged local service)
For VoIP (unlimited or flat-rate local service, unlimited all-distance service, measured or messaged local service)
Mandatory surcharges on connection accounted as company revenue
For Circuit Switched (unlimited or flat-rate local service, unlimited all-distance service, measured or messaged local service)
For VoIP (unlimited or flat-rate local service, unlimited all-distance service, measured or messaged local service)
State, county, and local taxes and surcharges on connection
For Circuit Switched (unlimited or flat-rate local service, unlimited all-distance service, measured or messaged local service)
For VoIP (unlimited or flat-rate local service, unlimited all-distance service, measured or messaged local service)
Other mandatory connection charges
For Circuit Switched (unlimited or flat-rate local service, unlimited all-distance service, measured or messaged local service)
For VoIP (unlimited or flat-rate local service, unlimited all-distance service, measured or messaged local service)

III. Internet Service Information

For each standalone, Internet service offered in the specified Census tract on MONTH DAY, YEAR, report information on the service's technology, advertised speeds, capacity allowances (if any), recurring rates, and non-recurring rates. Only report offerings where both the download and upload speeds are at least 200 kbps. Detailed instructions for each question section are provided in the particular section. Report information for each service offering distinguished by speeds, technology, and capacity allowance (if any). In the form, each column represents a separate speed/technology/capacity allowance combination.

III.a Service Information

Report information for each service offering distinguished by *speeds, technology,* and *capacity allowance* (if any). For example, if in the specified Census tract, unlimited 5/2 Mbps residential service is offered using either DSL or fiber to the home (FTTH), then report the 5/2 Mbps DSL unlimited service in one column and the 5/2 Mbps FFTH unlimited service in the next column. As another example, if a 10/2 Mbps DSL services is offered with either a 100 GB or 200 GB capacity allowance then report the 10/2 Mbps DSL 100 GB service in one column and the 10/2 Mbps DSL 200 GB service in the next column. Use as many columns (and extend as necessary) to report on all offered services. A drop down box allows for selecting the following technologies: DSL, FTTH, cable, fixed wireless, and other. Note that FTTH should only be used if the optical fiber reaches the boundary of the living space, such as a box on the outside wall. Report advertised speeds in Mbps.

Service Technology
Advertised Download Speed (Mbps)
Advertised Upload Speed (Mbps)

III.b Capacity Allowance Information

Report capacity allowances (in GB) applied to the service, if any. A capacity allowance is the monthly data usage level at which the Internet Service provider begins to block, rate-limit, or charge excess fees for additional data transmission. If a service offering has no specified allowance then enter ''Unlimited.'' For each capacity allowance in place, indicate what action is taken when the allowance is reached. For services with capacity allowances, a drop down box will offer a menu of actions the ISP will take once the limit is reached. These include ''Overage Charge,'' ''Blocking Traffic,'' ''Rate- limiting,'' and ''Other.'' If a capacity allowance is based on a customer's use relative to other customers, report the data amount (in GB) for which the allowance would be reached as of MONTH DAY, YEAR. Also indicate whether un-used data capacity may be ''rolled over'' from month to month.

Monthly capacity allowance on service (GB), if any. If no specified allowance, choose ''Unlimited.''

May unused capacity be rolled-over to the next month?

If the capacity allowance is reached, what action is taken?

III.c Rate and Charges Information

In some cases, multiple rates and/or taxes/fees/surcharges may exist for the same service within the Census tract. If this occurs for the specified Census tract, respondents must report the least and most expensive total cost offerings.

Do multiple rates and/or taxes, fees, surcharges exist for the same service offering within the same specified Census tract? (yes/no)

III.c.1 Recurring Rates

For each service offering, report each component of the rate in dollar and cents amounts. Reported monthly rates should be standard, non-discounted residential rates. In some cases, this may be the month-to-month rate available to a customer not eligible for introductory rates, etc. If there are multiple rates or taxes/fees/surcharges for the same service offering in the specified Census tract (indicated by ''Yes'' in the previous question), report the least total monthly cost offering in the Sections III.c.1 and III.c.2, and the greatest total monthly cost rates in Sections III.c.3 and III.c.4. If there is only one rate to report, use Sections III.c.1 and III.c.2.

Recurring monthly charge
Total of state, local, and municipal taxes
Total of all other mandatory fees and taxes (such as provider surcharges, etc.) passed through.
Surcharges on the service accounted as company revenue (i.e. non-pass through)

III.c.2 Non-Recurring Charges

For each item listed, report the *minimum* amount a customer would pay for each non-recurring charge if the item is required for the Internet service. If an item is not offered by the provider, then mark it as ''NA''.

Activation or connection *not* requiring a service visit to the premises

Activation or connection requiring a service visit (but assuming the premises is already physically wired)

Does this service require the customer use a modem or other hardware? (yes/no)

If ''Yes'' for modem and hardware question, what is the purchase price for necessary hardware? (if provider sells such hardware.)

If ''Yes'' for modem and hardware question, what is the *monthly rental price* for necessary hardware? (if provider rents hardware.)

Computer/laptop hook-up by service technician already making a service visit.

III.c.3 Recurring Rates (Use Only If Multiple Rates)

Only answer the following rates and charges questions if reporting multiple rates and/or taxes/fees/surcharges for the same service in the same Census tract. Report rates and charges for the greatest total monthly cost offering.

Recurring monthly charge
Total of state, local, and municipal taxes
Total of all other mandatory fees and taxes (such as provider surcharges, etc.) passed through.
Surcharges on the service accounted as company revenue (i.e. non-pass through)

III.c.4 Non-Recurring Rates (Use Only If Multiple Rates)

For each item listed, report the minimum amount a customer would pay for each non-recurring charge if the item is required for the Internet service. If an item is not offered by the provider, then mark it as ''NA''.

Activation or connection *not* requiring a service visit to the premises
Activation or connection requiring a service visit (but assuming the premises is already physically wired)
Does this service require the customer use a modem or other hardware? (yes/no)
If ''Yes'' for modem and hardware question, what is the purchase price for necessary hardware? (if provider sells such hardware.)
If ''Yes'' for modem and hardware question, what is the *monthly rental price* for necessary hardware? (if provider rents hardware.)
Computer/laptop hook-up by service technician already making a service visit.

[FR Doc. 2013–10567 Filed 5–16–13; 8:45 am]

BILLING CODE 6712–01–P

DEPARTMENT OF TRANSPORTATION

Surface Transportation Board

49 CFR Parts 1002, 1011, 1108, 1109, 1111, and 1115

[Docket No. EP 699]

Assessment of Mediation and Arbitration Procedures

AGENCY: Surface Transportation Board, DOT.

ACTION: Final rules.

SUMMARY: The Surface Transportation Board (Board or STB) adopts regulations that allow the Board to order parties to participate in mediation in certain types of cases and modify and clarify its existing mediation regulations. The Board also establishes a new arbitration program under which carriers and shippers may agree voluntarily in advance to arbitrate certain types of disputes that come before the Board, and clarifies and simplifies its existing arbitration rules.

DATES: These rules are effective on June 12, 2013.

ADDRESSES: Information or questions regarding these final rules should reference Docket No. EP 699 and be in writing addressed to: Chief, Section of Administration, Office of Proceedings, Surface Transportation Board, 395 E Street SW., Washington, DC 20423–0001.

FOR FURTHER INFORMATION CONTACT: Amy C. Ziehm at 202–245–0391. [Assistance for the hearing impaired is available through the Federal Information Relay Service (FIRS) at 1–800–877–8339.]

SUPPLEMENTARY INFORMATION: The Board favors the resolution of disputes through the use of mediation and arbitration procedures, in lieu of formal Board proceedings, wherever possible.[1] To that end, the Board has existing rules that encourage parties to agree voluntarily to mediate or arbitrate certain matters subject to its jurisdiction. The Board's mediation rules are set forth at 49 CFR 1109.1, 1109.3, 1109.4, 1111.2, 1111.9, and 1111.10. Its arbitration rules are set forth at 49 CFR 1108, 1109.1, 1109.2, 1109.3, and 1115.8. In a decision served on August 20, 2010,[2] and published in the **Federal Register** on August 24, 2010,[3] we sought input on how to increase the use of mediation and arbitration to resolve matters before the Board.[4] The Board received comments from 12 parties.[5]

On March 28, 2012, the Board issued a Notice of Proposed Rulemaking (NPRM) incorporating the previous comments and concerns of the parties. The Board proposed regulations that would allow the Board to order parties to participate in mediation in certain types of cases and would modify and clarify its existing mediation rules. The Board also proposed an arbitration program under which carriers and shippers would agree voluntarily to arbitrate certain types of disputes, and proposed modifications to clarify and simplify its existing rules governing arbitration in other disputes.[6]

The Board sought comments on the proposed regulations by May 17, 2012,[7] and replies by June 18, 2012.[8] On August 2, 2012, the Board held a public hearing to further explore the NPRM and the comments of the parties. At the public hearing, the Board heard testimony from the NGFA, NITL, WCTL, AAR, NS, UP, UTU–NY, The Tom O'Connor Group (Tom O'Connor), and the Alliance for Rail Competition (ARC).[9]

As explained in the NPRM, the Board's arbitration processes have remained largely unused since they were instituted.[10] The changes to the

[1] Mediation is a process in which parties attempt to negotiate an agreement that resolves some or all of the issues in dispute, with the assistance of a trained, neutral, third-party mediator. Arbitration, by comparison, is an informal evidentiary process conducted by a trained, neutral, third-party arbitrator with expertise in the subject matter of the dispute. By agreeing to participate in arbitration, the parties agree to be bound (with limited appeal rights) by the arbitral decision.

[2] *Assessment of Mediation and Arbitration Procedures,* EP 699 (STB served Aug. 20, 2010).

[3] *Assessment of Mediation and Arbitration Procedures,* 75 FR 52054.

[4] *Assessment of Mediation and Arbitration Procedures,* EP 699 (STB served Dec. 3, 2010). The Board served a subsequent notice in this matter on December 3, 2010, to clarify that any comments filed by the Railroad-Shipper Transportation Advisory Council (RSTAC) would be accorded the same weight as other comments in developing any new rules. RSTAC is an advisory board established by Federal law to advise the U.S. Congress, the U.S. Department of Transportation, and the Board on issues related to rail transportation policy, with particular attention to issues of importance to small shippers and small railroads. By statute, RSTAC members are appointed by the Board's chairman. Representatives of large and small rail customers, Class I railroads, and small railroads sit on RSTAC. The Board's members and the U.S. Secretary of Transportation are *ex officio,* nonvoting RSTAC members. (49 U.S.C. 726.)

[5] The Board received comments from the U.S. Department of Agriculture (USDA), the Association of American Railroads (AAR), Consumers United for Rail Equity (CURE), the National Grain and Feed Association (NGFA), the National Oilseed Processors Association (NOPA), RSTAC, Transportation Arbitration and Mediation, P.L.L.C. (TAM), the Western Coal Traffic League (WCTL), Dave Gambrel, and Gordon P. MacDougall for the United Transportation Union–New York State Legislative Board (UTU–NY). The American Paper & Forest Association (APFA) and The National Industrial Transportation League (NITL) filed joint comments.

[6] *Assessment of Mediation and Arbitration Procedures,* EP 699 (STB served Mar. 28, 2012).

[7] The Board received comments from BNSF Railway Company (BNSF), Norfolk Southern Railway Company (NS), Union Pacific Railroad Company (UP), AAR, WCTL, Montana Grain Growers Association (MGGA), NGFA, NITL, National Railroad Passenger Corporation (AMTRAK), USDA, and UTU–NY.

[8] The Board received replies from AAR, UP, WCTL, NITL, and UTU–NY.

[9] Terry Whiteside appeared on behalf of the following parties: ARC, Montana Wheat & Barley Committee, Colorado Wheat Administrative Committee, Idaho Barley Commission, Idaho Wheat Commission, Nebraska Wheat Board, Oklahoma Wheat Commission, South Dakota Wheat Commission, Texas Wheat Producer Board, and Washington Grain Commission.

[10] The Board first adopted arbitration rules in *Arbitration of Certain Disputes Subject to the Statutory Jurisdiction of the Surface Transportation Board,* EP 560 (STB served Sept. 2, 1997).

Board's arbitration rules are intended to consolidate the separate arbitration procedures in Parts 1108 and 1109, and to encourage greater use of arbitration to resolve disputes before the Board by simplifying the process, identifying specific types of disputes eligible for a new arbitration program, and establishing clear limits on the amounts in controversy.[11] As discussed below, the Board believes that the proposed arbitration program it now establishes will be useful to both shippers and carriers, facilitating the resolution of disputes in a less time-consuming and expensive manner than through the Board's formal adjudicatory processes. Additionally, as arbitration is potentially less adversarial, it can help the parties to preserve their commercial relationship.[12]

In designing the arbitration program set forth in these final rules, the Board sought to incorporate the suggestions of the commenting parties to the maximum extent possible. The resulting arbitration program is designed to be flexible, party-driven, and functional. Under the new arbitration program, all parties eligible to bring matters before the Board will have the opportunity to opt into the arbitration program before a dispute arises. Parties will also have the option to opt into the arbitration program when a dispute is formally filed with the Board, provided the parties agree to do so in writing. Arbitration-program-eligible matters are limited to demurrage; accessorial charges; misrouting or mishandling of rail cars; and disputes involving a carrier's published rules and practices as applied to particular rail transportation. The parties may also agree in writing, prior to the commencement of arbitration, to arbitrate certain additional matters, subject to the condition that they may only arbitrate matters within the statutory jurisdiction of the Board, and may not arbitrate matters in which the Board is required to grant or deny a license or other regulatory approval or exemption. Furthermore, the monetary award cap under the Board's new program will be set at $200,000. In response to comments, the final rules provide that parties may agree to a different award level when they opt into the program or by a separate written agreement at the start of an arbitration proceeding.

The changes to the existing mediation rules establish procedures under which the Board may order the parties to participate in mediation in certain types of disputes before the Board, on a case-specific basis, and clarifies and simplifies the existing mediation rules.[13] The Board will assign one or more Board employees, trained in mediation, to conduct the mediation. Mediation periods will last up to 30 days, but can be extended upon the mutual request of the parties. The Board reserves the right to stay underlying proceedings and to toll any applicable statutory deadlines when the parties mutually consent to mediation. However, the Board will not stay proceedings or toll statutory deadlines when at least one of the parties does not consent to mediation. The Board concludes that the revised mediation rules are in the public interest. If a dispute is amicably resolved, it is likely that the parties would incur considerably less time and expense than if they used the Board's formal adjudicatory process.

There are important limitations to the types of matters that can be the subject of the mediation and arbitration program. The mediation and arbitration rules are not available to resolve any matter in which the Board is statutorily required to grant or deny an application or petition for exemption for a license or other regulatory approval, or in matters beyond the statutory jurisdiction of the Board.[14] These rules will also not apply to labor-protection disputes, which have their own arbitration procedures.

The Board's Final Rules and the Comments of the Parties

Arbitration

Having carefully considered the comments and testimony of the parties, the Board adopts the following rules governing the use of arbitration to resolve disputes before the Board. The Board's arbitration rules will be revised to consolidate the separate arbitration procedures contained in Parts 1108 and 1109, and are intended to encourage greater use of arbitration to resolve disputes before the Board by simplifying the process and by clarifying the types of disputes that may be submitted under the Board's new arbitration program. We discuss below the major issues raised in the comments to our proposed arbitration rules, and our responses to the parties' concerns.

Participation in the Board's Arbitration Program

The NPRM proposed a new arbitration program in which Class I and Class II rail carriers would have been deemed to agree to participate voluntarily in the Board's proposed arbitration program unless they opted out of the program by filing a notice with the Board. Class III rail carriers and shippers would not have been deemed to agree to participate but instead could have chosen to participate in the arbitration program on a case-by-case basis. Under the proposed rules, there would have been no penalty for opting out of the Board's arbitration program. The option of choosing to participate in the arbitration program on a case-by-case basis was also open to Class I and Class II railroads if they opted out of the arbitration program.

AAR and the participating Class I railroads are unanimous in their objection to the opt-out provision of the NPRM. AAR's position is that the proposed arbitration program was not voluntary, and the parties could not meaningfully consent to arbitration.[15] BNSF[16] and NS[17] echo AAR's concerns. UP challenges the opt-out provision on grounds that Class I and Class II railroads would be treated differently from Class III railroads and shippers.[18]

During the public hearing, AAR argued that if the Board moves forward with its proposed rule requiring Class I and Class II railroads to agree in advance to arbitrate certain matters, then the requirement should be required of all parties on an equal, reciprocal basis.[19] AAR stated that allowing participants to opt into the program would encourage participation.[20] UP went further stating that the opt-out approach did not facilitate trust between shippers and carriers.[21] UP also raised concerns that the proposed rules would create uncertainty because tens of thousands of shippers would have the ability to use a one-sided mechanism to force the Class I railroads to arbitrate

[11] The Board has authority to revise its arbitration rules under 49 U.S.C. 721(a) and under the Alternative Dispute Resolution Act, 5 U.S.C. 571–584.

[12] Alternative Dispute Resolution Act of 1998, Public Law 105–315, § 2, 112 Stat. 2993 (1998) (discussing the benefits of alternative dispute resolution).

[13] The Board's authority to revise its mediation rules exists under 49 U.S.C. 721(a) and under the Alternative Dispute Resolution Act, 5 U.S.C. 571–584.

[14] Thus, these procedures will not be available in a regulatory proceeding to obtain the grant, denial, stay or revocation of a request for construction, abandonment, acquisition, trackage rights, merger, or pooling authority or an exemption related to such matters.

[15] AAR Comments 6, May 17, 2012.

[16] BNSF Comments 3, May 17, 2012.

[17] NS Comments 3 & 6, May 17, 2012.

[18] UP Comments 4–7, May 17, 2012.

[19] Public Hr'g Tr., 112, Aug. 2, 2012.

[20] *Id.* at 113.

[21] *Id.* at 134.

disputes.[22] UP speculated that an opt-in arbitration program, where even a few parties on each side are opting in, may result in more voluntary participation.[23] In its comments, BNSF proposes altering the program from an opt-out to an opt-in program where the joining party could specify the types of disputes it would be willing to arbitrate.[24]

The Board found persuasive the concerns and suggestions raised by AAR, UP, BNSF, and NS, and remains committed to establishing a functional arbitration program, which clearly necessitates participation by the Class I and Class II railroads. The record and the testimony of the carriers show that the proposed rule requiring a Class I or Class II railroad to opt out of the program created an unintended perception that the Board's proposed arbitration program would be procedurally biased.

Based on the comments, and to encourage the participation of Class I and Class II railroads in this arbitration program, the final rule eliminates the opt-out procedures in favor of an opt-in requirement for all parties. Under the final rule, all classes of rail carriers, shippers, and other parties eligible to participate in disputes before the Board may voluntarily choose to opt into the Board's arbitration program by filing a notice with the Board. The Board will then maintain a list of program participants on its Web site. Thus, all parties will be on an equal footing entering into the arbitration program. The Board recognizes that there are many more shippers than there are railroads, making the process of shippers opting in a significant task. The Board's Office of Rail Customer and Public Assistance will engage in outreach with shipper organizations to ensure that they are aware of their options under the arbitration program.

Under the final rules, those parties voluntarily opting into the arbitration program are eligible to select which arbitration-program-eligible matters they are willing to arbitrate. An arbitral award may not exceed a monetary cap of $200,000, unless the parties to a dispute agree to a different amount, either higher or lower, in writing, on a case-by-case basis, prior to the commencement of arbitration. Both railroads and shippers may voluntarily opt into the program on a case-by-case basis. Parties who have opted into the program may also choose to opt out of the program by filing a notice with the Board. An opt-out notice will take effect 90 days after filing. These opt-out procedures may not be used to opt out of an ongoing arbitration proceeding.

Program participants in the new arbitration program will have prior knowledge of the issues to be arbitrated and the maximum amount of a monetary award. The Board's arbitration program is intended to be participant-driven; allowing parties to agree in writing to arbitrate additional matters and change the monetary award cap on a case-by-case basis.

Arbitration-Program-Eligible Matters

In its proposed rules, the Board suggested matters that would be eligible for arbitration through the program. This list included: (1) Demurrage and accessorial charges; (2) misrouting or mishandling of rail cars; (3) disputes involving a carrier's published rules and practices as applied to particular rail transportation; and (4) other rail service-related matters.

The inclusion of the term ''other service-related matters'' led some commenters to suggest that arbitration program participants, particularly Class I and Class II railroads, would be agreeing in advance to arbitrate matters that were not clearly defined. AAR asserts that, despite the list, the Board failed to define adequately what disputes would be subject to the proposed arbitration program.[25] Similarly, UP states that the ''other service-related matters'' language in the NPRM was overly broad and suggested alternative language.[26]

Conversely, NITL asks that the Board add to the list of arbitral matters: (1) Disputes about loss and damage arising under receipts and bills of lading governed by 49 U.S.C. 11706; (2) disputes about damage to shipper rail cars; and (3) disputes involving damage as a result of service failures not otherwise covered in the list proposed by the Board.[27] NITL justifies these additions by noting that they are generally dollar-determinable, rarely have broad policy or regulatory ramifications, and are common sources of dispute between railroads and shippers.[28] UP and AAR oppose an expansion of the list of arbitration-eligible matters.[29]

Additionally, NITL asks that the Board clarify whether parties could use the Board's arbitration process for contract disputes where all parties to the dispute agree and where the contract does not contain an arbitration clause.[30] UP opposes this approach on grounds that this type of arbitration would complicate the dispute resolution process and would entangle the Board in interpreting contracts, which the Board generally leaves to the courts to resolve.[31] UTU–NY also raises jurisdictional concerns and asserts that arbitration should be confined to transactions otherwise subject to the Board's jurisdiction. [32]

The MGGA also advocates expanding the scope of subjects that could be arbitrated through the Board's program, requesting that parties be permitted to arbitrate matters that could lead to prospective relief, including freight rates.[33] UP counters that rate challenges are complicated and that an arbitrator would lack the expertise or resources to handle such matters.[34] Likewise, WCTL agrees that the arbitration program would not be appropriate to resolve complex matters.[35]

During the public hearing, AAR and the participating Class I railroads urged the Board to remove the catch-all ''other rail service-related matters'' provision.[36] UP stated that adding clarity to the arbitration process by reducing the range and types of disputes would encourage participation.[37] AAR expressed the view that the list of arbitration-eligible matters should be limited to specifically enumerated matters that do not rise to a level of policy significance and are essentially factual disputes.[38] The NGFA stated that it has no objection to removing the catch-all provision.[39]

The Board's final rule clarifies the types of disputes that are eligible for arbitration under the Board's program, removing the catchall language of ''other rail service-related matters'' to ensure that the list of program-eligible matters is clearly defined. Matters eligible for arbitration are: Demurrage, accessorial charges, misrouting or mishandling or railcars, and disputes involving a carrier's published rules and practices as applied to particular rail transportation. Under the final rules, all parties opting into the arbitration program will have full prior knowledge that these four matters are eligible under the arbitration program.

[22] *Id.*

[23] *Id.* at 135–36.

[24] BNSF Comments 3–4, May 17, 2012

[25] AAR Comments 7, May 17, 2012.

[26] UP Comments 7–8, May 17, 2012.

[27] NITL Comments 8, May 17, 2012.

[28] *Id.*

[29] UP Reply 5–7, June 18, 2012; and AAR Reply 9–10, June 18, 2012.

[30] NITL Comments 9, May 17, 2012.

[31] UP Reply 8, June 18, 2012.

[32] UTU–NY Comments 9, May 17, 2012.

[33] MGGA Comments 2, May 17, 2012.

[34] UP Reply 9, June 18, 2012.

[35] WCTL Comments 7–8, May 17, 2012.

[36] Public Hr'g Tr., 147–53, Aug. 2, 2012.

[37] *Id.* at 148.

[38] *Id.* at 112–13.

[39] *Id.* at 95.

In response to the comments, the final rules also provide that, when submitting an opt-in notice, parties may further narrow the field of eligible matters that they will agree to arbitrate. At the same time, the final rules reflect the requests of a number of parties for the opportunity to arbitrate additional types of disputes where the parties believe arbitration could be helpful. Thus, to provide parties with maximum flexibility, the final rules specify that parties may agree in writing on a case-by-case basis to arbitrate additional matters, provided that the additional matters are within the Board's statutory jurisdiction to resolve, and that the dispute does not require the Board to grant, deny, stay or revoke a license or other regulatory approval or exemption, and does not involve labor protective conditions.

Monetary Award Cap

The NPRM proposed that the relief that could be awarded under the arbitration program would be limited to a maximum of $200,000 per arbitral dispute, unless all parties to the matter agreed at the commencement of arbitration to a higher cap. However, the Board specifically invited comments on whether the proposed monetary award cap should be increased or decreased.

NITL argues that the proposed cap of $200,000 is too low and is likely to substantially restrict the number of disputes that might be eligible for arbitration.[40] NITL suggests that the cap should be increased to at least $500,000.[41] That figure, according to NITL, would better cover the majority of disputes under the proposed arbitration program and would make shipper parties more likely to participate in disputes.[42] WCTL endorses the monetary award limit put forward by the Board.[43] USDA asserts that the proposed $200,000 cap should be increased, or that there need be no cap at all.[44]

During the public hearing, NGFA stated that its arbitration program currently has a cap of $200,000, but that its cap is currently under review.[45] WCTL said that it was generally satisfied with the proposed cap of $200,000, but that the parties should have the option to mutually agree to increase the amount.[46] ARC recommended a program award cap of $1,000,000 to reflect the cost a party might incur in the arbitration process and to open the program up to a larger number of potential users.[47]

UP stated that it would not rule out participating in Board-sponsored arbitration if the monetary award cap is raised from $200,000 to $500,000.[48] NS stated that the cap would be one of a number of factors it would consider in deciding whether to participate in arbitration and that the higher the cap the more important a factor it would become.[49] AAR recommended that the Board keep the cap low at least until participants become more familiar and comfortable with the program.[50]

The Board will maintain the proposed arbitration program's monetary award cap of $200,000. We recognize that some parties have concerns about this amount but we believe an award cap of $200,000 is an appropriate starting point as the arbitration program is introduced. Such an amount is high enough to encompass a wide range of disputes, but should not be so high as to dissuade parties from participating in the arbitration program.[51] The monetary award cap is per case and not per occurrence. As parties become more familiar with using the arbitration program, the Board may reassess the monetary award cap.

At the same time, the Board recognizes that any monetary award cap placed on the arbitration program may not fully encompass every arbitration-eligible dispute. Thus, the final rules allow parties to agree in writing to arbitrate a dispute with a different award amount. However, no injunctive relief will be available through the Board's arbitration program because matters in which a party seeks injunctive relief are generally complicated or implicate significant policy or regulatory issues that are better suited for resolution using the Board's formal adjudicatory procedures.

Counterclaims and Affirmative Defenses

The Board's proposed rules did not expressly provide parties with the option to present counterclaims and affirmative defenses in arbitration proceedings. AAR[52] and UP[53] express concerns about whether the railroads could present counterclaims in the proposed arbitration program and note that the proposed rules create a perception that shippers would hold veto power over any such claim. At the hearing, UP noted that, regardless of whether the railroad or the shipper initiated the arbitration, it would not be cost effective to deal with only part of a dispute through arbitration, leaving related issues unresolved.[54] NITL suggested that the Board should allow for counterclaims in arbitration if the issue is arbitration-program-eligible and is related to the same transportation events as the primary claim.[55]

In response to these comments, the final rules will allow a respondent to file a counterclaim against a complaining party when the respondent files its answer to the arbitration complaint, provided the counterclaim arises out of the same set of circumstances or is substantially related to the underlying dispute, and subject to the Board's jurisdiction. An answer shall also contain all affirmative defenses that a respondent wishes to assert against a complainant. If a party fails to assert a counterclaim or affirmative defense in the answer to the complaint, it will forfeit the right to do so at a later date. Counterclaims will not count against the monetary award cap selected by the parties for the initiating complaint, because a counterclaim is a separate claim and will be subject to its own monetary award cap of $200,000, unless a different cap is selected by the parties.

Arbitrator Panel

In its proposed rules, the Board did not propose the use of multiple arbitrators to resolve a dispute. It did, however, seek comments on approaches the agency could employ if parties were to utilize a panel of two or three arbitrators. In response, NITL asserts that the parties should have the option of using a panel of three arbitrators.[56] It claims that, although many disputes might be resolved by a single arbitrator, there are some disputes in which the collective judgment of three persons might be useful.[57] NITL argues, however, that this option should be used only when all parties to a dispute agree that one arbitrator would be insufficient.[58] MGGA claims that a panel of arbitrators would be better than a single arbitrator.[59] It suggests that, upon agreement by both parties, the

[40] NITL Comments 14, May 17, 2012.

[41] *Id.*

[42] *Id.*

[43] WCTL Comments 9, May 17, 2012.

[44] USDA Comments 3, May 17, 2012.

[45] *Id.* at 64-Public Hr'g Tr., 65, Aug. 2, 2012.

[46] *Id.* at 104.

[47] *Id.* at 55.

[48] *Id.* at 138.

[49] *Id.* at 139.

[50] Public Hr'g Tr., 138–39, Aug. 2, 2012.

[51] For example, of 15 recent demurrage cases before the Board, 11 would have been eligible for arbitration under the $200,000 monetary award cap based on the value of the case asserted in the complaint.

[52] AAR Comments 13–14, May 17, 2012.

[53] UP Comments 4, May 17, 2012.

[54] Public Hr'g Tr., 148–49, Aug. 2, 2012.

[55] *Id.* at 40.

[56] NITL Comments 13, May 17, 2012.

[57] *Id.*

[58] *Id.*

[59] MGGA Comments 2, May 17, 2012.

Board should appoint the agency's arbitrator, and each party should choose and pay for an additional arbitrator.[60]

During the public hearing, NGFA supported a panel of three arbitrators. In the NGFA's experience, this improves the likelihood of well-reasoned decisions, enhances the balance and fairness with which the system is viewed, and reduces the potential for inadvertent errors.[61] ARC stated that creating a panel of three arbitrators, in which the railroad and shipper are both represented by an arbitrator on the panel, would eliminate the need to find a single arbitrator who would be both neutral and an industry expert.[62] NITL believed a single arbitrator to be more cost effective, but that the parties should have the option to select an arbitration panel.[63] Both NITL[64] and WCTL[65] expressed concerns regarding the cost-prohibitive nature of a panel of three arbitrators in light of the $200,000 monetary award cap, the central concern being that shippers seeking small amounts of damages might be frozen out of the arbitration process if the Board were to mandate a three-member arbitration panel.

UP stated at the hearing that it views three-member arbitration panels as a solution to the problem of finding a single-neutral arbitrator with subject-matter expertise.[66] UP stated that with three arbitrators, and each of the parties selecting someone it believes is knowledgeable and able to explain the issues, UP might be willing to accept a third-neutral arbitrator with less familiarity of the subject matter.[67]

The Board finds persuasive the comments regarding the respective benefits of both a panel of three arbitrators and the use of a single-neutral arbitrator. The Board further believes that a flexible program will be the most useful to party participants. The parties, and not the Board, are in the best position to determine what will work best in a particular arbitration proceeding. The final rules, therefore, allow the parties to shape individual arbitrations to suit their specific needs rather than creating a one-size-fits-all arbitration program.

Under the final rules, a panel of three arbitrators will be utilized unless the parties agree in writing to the use of a single neutral arbitrator. The Board believes that using a panel of three arbitrators will alleviate the concerns raised about finding a single-neutral arbitrator with subject-matter expertise. The parties in their comments and testimony recognize that it would not be overly difficult to appoint two subject-matter experts as arbitrators who can educate and guide the third-neutral arbitrator.[68] Thus, establishing a three-member arbitration panel, as a general rule, will help to ensure the integrity and neutrality of the arbitration proceedings.

The Board also recognizes that it can be appropriate to use a single-neutral arbitrator in certain cases as a cost-effective, expeditious choice for resolving a dispute between the parties. Thus, the final rules allow either party to request the single-arbitrator option in either the complaint or the answer. Both parties, however, must consent to the use of a single-neutral arbitrator in writing for the option to be selected. If no agreement is reached, the parties will have the option of utilizing the panel of three arbitrators or bringing the matter formally before the Board and foregoing the arbitration process.

Selecting Arbitrators and Cost Sharing

AAR suggests that the Board should reassess how arbitrators will be selected.[69] If the Board were to maintain the current roster system, AAR asks that the Board initiate a public and transparent process for updating the list.[70] It claims that the Board has no apparent standards of qualifications for arbitrators and no apparent vetting process.[71] AAR further asserts that the Board should void the existing roster and institute a proceeding to establish a new list of arbitrators.[72] In such a proceeding, according to AAR, the Board should establish objective criteria to judge whether an individual could be an effective arbitrator of Board-related disputes.[73] It proposes that such criteria should include a minimum number of years of transportation experience and demonstrated neutrality.[74]

AAR further suggests that the Board should establish clear procedures for selecting the third-party neutral or single arbitrator in a specific dispute.[75] It proposes that, if the parties cannot agree on an arbitrator, the Board could establish a ''best-final offer'' process where each party would submit the name of each arbitrator to the Board with reasons backing that choice.[76] The Board could then select one of the two.[77] WCTL and NITL propose a similar process for the Board to select an arbitrator.[78]

At the hearing, UP speculated that one reason why the Board's arbitration procedures have not been used in the past may be the quality of the available list of arbitrators.[79] UP noted that, in other arbitration settings, it can quickly assess the qualifications and neutrality of an arbitrator. Typically, UP and the opposing party can each select an arbitrator and then either mutually agree on a third arbitrator or utilize a neutral arbitration organization to supply a list of potential arbitrators complete with extensive background information.[80]

The Board recognizes that its current list of arbitrators is outdated and does not provide the type of information the parties have expressed an interest in knowing prior to an arbitrator's appointment. The selection process could also have been made clearer. The Board has incorporated the suggestions and best practices identified by the parties into the final rules to create a streamlined, party-driven arbitrator selection process, and will therefore no longer maintain a roster or list of arbitrators.

The Board will provide the parties with a list of five neutral arbitrators to facilitate the selection of a third-neutral arbitrator, or a single-neutral arbitrator if the parties so agree in writing. The neutral arbitrator is intended to be an arbitration-process expert, rather than a subject-matter expert. When individual arbitration proceedings arise, the Board will obtain a list of potential arbitrators from professional arbitration associations such as the American Arbitration Association, Judicial Arbitration and Mediation Services (JAMS), and the Federal Mediation and Conciliation Service. The Board believes that these professional arbitration associations, with expansive and well-maintained rosters, will be able to provide a list of qualified-neutral arbitrators to the Board upon request. Utilizing the expertise of these

[60] *Id.*

[61] Public Hr'g Tr., 20, Aug. 2, 2012.

[62] *Id.* at 56 & 72–73.

[63] *Id.* at 42.

[64] *Id.* at 84–85.

[65] *Id.* at 85–86.

[66] *Id.* at 141–42.

[67] Public Hr'g Tr., 142, Aug. 2, 2012.

[68] The final rules allow each party to appoint one arbitrator who is intended to be a subject-matter expert. The final rules place no restrictions on the selection of this party-appointed arbitrator. A party may appoint any individual that it believes has the requisite qualifications to serve as an arbitrator, including its employee, a choice that could reduce the costs of arbitration.

[69] AAR Comments 17–18, May 17, 2012.

[70] *Id.* at 17.

[71] *Id.* at 17.

[72] *Id.*

[73] *Id.*

[74] *Id.* at 17–18.

[75] AAR Comments 18, May 17, 2012.

[76] *Id.*

[77] *Id.*

[78] WCTL Comments 10, May 17, 2012; and NITL Comments 12, May 17, 2012.

[79] Public Hr'g Tr., 121, Aug. 2, 2012.

[80] *Id.* at 122.

organizations should expedite and improve the arbitrator selection process. It was apparent from the comments and testimony that the parties have had experience utilizing arbitrators from these organizations and have been comfortable doing so. The list of neutral arbitrators will be accompanied by a detailed professional history of each arbitrator. Parties to arbitration will split all costs associated with the use of the neutral arbitrator. The Board will pay all costs associated with obtaining a list of arbitrators from professional arbitration associations.

To select the neutral arbitrator, the Board has adopted a ''strike'' methodology in the final rules. Specifically, after the Board obtains a list of five neutral arbitrators, and provides the list to the parties, the complainant will be responsible for striking one name from the list. The respondent will then have the opportunity to strike another name from the list. The process will repeat until only one name remains on the list: the individual who will be the neutral arbitrator. This selection should be concluded in no more than 14 days from the date the Board sends the arbitrator list to the parties. Each party to arbitration is responsible for conducting its own due diligence on the list of neutral arbitrators. The selection of the neutral arbitrator will not be challengeable before the Board. To permit challenges to the strike methodology would increase litigation costs and lengthen the arbitration process, which would contravene the goals of the Board's arbitration program.

Arbitration Procedures

To carry out an effective arbitration process for all parties, arbitration proceedings must be conducted in a timely yet thorough manner. The final rules provide that when the parties select a panel of three arbitrators, the neutral arbitrator will establish all arbitration procedures including discovery, the submission of evidence, and the treatment of confidential information, and the evidentiary phase of the arbitration process must be completed within 90 days from the established start date. The neutral arbitrator will be required to issue an unredacted written decision to the parties on behalf of the arbitration panel within 30 days following the completion of the evidentiary phase. The neutral arbitrator must serve a redacted copy of the arbitration decision upon the Board within 60 days of the completion of the evidentiary phase.

Publication of Decisions and Precedential Value

Under the proposed rules, arbitration decisions would not be made public in order to promote parties' willingness to utilize the arbitration program. The Board received comments and testimony in opposition to this proposal. AAR argues that making arbitration awards public would have three benefits: (1) Public decisions that summarize the position of the parties discourage extreme positions and can encourage voluntary settlement; (2) public decisions would create incentives for arbitrators to render thoughtful, well-reasoned decisions; and (3) public decisions would allow parties to make an informed decision in selecting arbitrators based on their prior work.[81] As such, AAR proposes that arbitrators should be required to render written confidential decisions to the parties involved in disputes and also a shorter public summary of the decision to be submitted to the Board for publication on the Board's Web site.[82] At the public hearing, NITL stated that it believes there are commercial positives to publishing arbitration decisions and that published decisions add a layer of transparency to the arbitration program.[83] NITL also argued that publishing decisions may ease concerns about the program because parties can see that other parties have gone through the process before.[84] NGFA stated that arbitration decisions should be published but with confidential materials redacted.[85] NGFA expressed the view that publishing arbitration decisions would encourage shippers and carriers to resolve disputes prior to arbitration.[86] UP suggested that the Board should publish arbitration decisions on the Board's Web site in order to ensure transparency of the arbitration process.[87]

During the hearing, NITL stated that published arbitration decisions should have no precedential value.[88] MGGA also supports non-precedential arbitration decisions.[89] NGFA states that, while arbitration decisions offer no precedential value, they provide considerable value as a published guide.[90] UP states that it would support publication of arbitration decisions if they did not disclose confidential information, are not precedential, and are not admissible in future arbitrations.[91]

Based on the parties' comments, the Board will require the publication of arbitration decisions. The arbitrators shall, with the help of the parties or pursuant to the arbitration agreement, redact from this decision all proprietary or confidential information, and provide the redacted copy to the Board within 60 days of the completion of the evidentiary phase. The Board will then publish the redacted decision on its Web site. Arbitrators shall be required in all cases to maintain an unredacted copy of their decisions. In the event an arbitration decision is appealed to the Board, the neutral arbitrator shall be required to serve upon the Board an unredacted copy of the decision, but the Board will consider this decision confidential and will not post it on its Web site. The Board will not publish any proprietary or confidential information. Although arbitration decisions will be available on the Board's Web site, these decisions will have no precedential value in any proceeding including other mediations, arbitrations, formal Board proceedings, and court appeals of Board decisions.

Standard of Review

The Board stated in its proposed rules that its standard of review of an arbitral decision would be narrow and that relief would be limited to instances involving a clear abuse of arbitral authority or discretion. BNSF asks the Board to allow appeals on additional grounds including that: (1) The arbitrator has exceeded his or her authority; (2) the arbitration award contravenes statutory requirements; and/or (3) the arbitrator has exhibited partiality.[92] BNSF argues that a party is more likely to participate in the arbitration program if it knows that the standard of review is broad enough to allow the Board to review and modify or vacate an award that is clearly in error or is issued under circumstances where the arbitrator is biased or acts outside his or her authority.[93] BNSF notes that this standard is similar to the standard used to review arbitration awards under the Federal Arbitration Act.[94]

Other parties also support broadening the standard of review. For example, UP argues that one ground for appeal should be that an arbitrator failed to

[81] AAR Reply 10–11, June 18, 2012.
[82] *Id.* at 11.
[83] Public Hr'g Tr., 101, Aug. 2, 2012.
[84] *Id.* at 93.
[85] *Id.* at 21.
[86] *Id.*
[87] *Id.* at 124.
[88] *Id.* at 43.
[89] MGGA Comment 2, May 17, 2012.
[90] NFGA Comment 9, May 17, 2012.
[91] UP Reply 10, June 18, 2012.
[92] BNSF Comments 5, May 17, 2012.
[93] *Id.*
[94] *Id.*

disclose any relationship or dealing between the arbitrator and a party or its counsel.[95] AAR proposes, at a minimum, that the Board should add the phrase ''or contravenes statutory requirements'' to the proposed standard of review.[96] USDA suggests that parties should be able to appeal the initial arbitration decision to a proposed review panel before seeking the Board's review of the arbitration decision, except in instances involving a clear abuse of arbitral authority or discretion.[97]

NITL objects to these attempts to expand the standard.[98] It claims that the standard should be narrow because a broad standard could lead to frequent and complex appeals and could undercut a prime rationale for arbitration in the first place.[99] NITL does, however, agree that the lack of disclosure of an arbitrator's relevant relationship would be a sound reason for appeal and that the Board should broaden its standard to accommodate that ground.[100]

Additionally, NGFA claims that, because the proposed 49 CFR 1115.8(c) would require an arbitrator to be guided by the Interstate Commerce Act and by STB and ICC precedent, on appeal a party could argue that it was an abuse of discretion for an arbitrator to depart from an earlier Board or ICC decision.[101] According to NGFA, this possibility would significantly broaden the standard proposed at § 1108.11(c).[102] Therefore, NGFA asserts that the Board should not instruct arbitrators to be guided by prior Board or ICC decisions, except for jurisdictional issues.[103] WCTL questions NGFA's suggestion.[104] WCTL notes that, if the Board's decision were to uphold an arbitral award that was contrary to established law, the Board's decision would be subject to challenge in court under the Hobbs Act (28 U.S.C. 2321, 2342).[105]

Upon petition by one or more parties to the arbitration, the Board reserves the right to review, modify, or vacate any arbitration award. The final rules clarify that the Board will apply a narrow standard of review, but which is somewhat broader than originally proposed, and will grant relief only on grounds that the award reflects a clear abuse of arbitral authority or discretion, or directly contravenes statutory authority. In response to BNSF's proposed standard of review, the Board notes that, if arbitrators exceed their authority or exhibit partiality, such conduct is within the scope of the adopted standard. The final rules provide that, under this narrow standard of review, arbitrators may be guided by, but need not be bound by, agency precedent.

The Board notes that the review process adopted here is similar to the arbitral review process established by the Federal Energy Regulatory Commission (FERC).[106] FERC, like the Board, is an independent regulatory agency with a statutory mandate to protect the public interest. We are broadening our proposed standard of review somewhat to help carry out our statutory responsibility by ensuring that arbitration decisions do not directly contravene statutory authority. We decline, however, further broadening the Board's standard of review because such a detailed review process could defeat the purpose of arbitration.

Judicial review of the Board's decision reviewing an arbitral decision would be in the federal courts of appeals under the Hobbs Act (28 U.S.C. 2321, 2342) and would apply Administrative Procedure Act standards of review. If the parties do not seek the Board's appellate review of an arbitral decision, they would have the right to appeal the arbitral award directly to a federal district court, under the Federal Arbitration Act, 9 U.S.C. 9–13.

Mediation

In the NPRM, the Board proposed new mediation rules under which the Board could order parties to participate in mediation of certain types of disputes, on a case-specific basis, and sought to clarify and simply the existing mediation procedures where parties to a proceeding can voluntarily request the Board to institute a mediation process to attempt to resolve a dispute. The Board also proposed to reserve the right to stay underlying proceedings and toll any applicable statutory deadlines for the duration of the mediation.

Comments and testimony from the parties regarding the Board's proposed revisions to its mediation rules at Part 1109 were generally positive, with only one party objecting fully to the revised rules.

At the public hearing, many of the parties expressed their support for the proposed mediation program. NGFA stated that it supports the proposed rules.[107] NITL expressed its support for the Board's proposal to order parties to mediation at the request of one party, or at the Board's own initiative except in matters involving regulatory approvals and for labor disputes.[108] NITL believed the proposed 30-day mediation period and the option to extend the mediation period are reasonable.[109] ARC stated that mediation could be one of the most important and useful steps for resolving disputes going forward.[110] Tom O'Connor stated that he had positive experiences with Board-sponsored mediation in the past, and that he supports continued and expanded use of mediation at the Board.[111] NS also expressed its support for voluntary mediation provided it remains confidential and inadmissible in formal Board proceedings.[112]

In its comments, UP states that it does not object to the new mediation proposals, but it suggests that ''applicable statutory deadlines'' be clarified to read ''statutory deadlines imposed on the Board under the Interstate Commerce Act'' so that it is clear that the Board cannot toll limitations and deadlines established by other federal or state statutes.[113] Similarly, in its comments AAR expresses concerns that the Board does not have the authority to toll statutes of limitations on the collection of payments in the courts and that such statutes could run while mediation is ordered by the Board without consent of the parties.[114] It asks that the Board clarify its authority to toll statutory deadlines while mediation is ongoing. Additionally, AAR questions what authority the Board has to compel mediation without obtaining the consent of the parties.[115]

WCTL supports many of the mediation regulations proposed by the Board. It does claim, however, that the proposed regulations contain confidentiality provisions that differ somewhat from the confidentiality provisions the Board employs in SAC cases.[116] WCTL argues that the existing confidentiality provisions applying to SAC cases have been effective, and that the Board should consider applying those confidentiality provisions as part

[95] UP Comments 12, May 17, 2012.
[96] AAR Comments 18, May 17, 2012.
[97] USDA Comments 3, May 17, 2012.
[98] NITL Reply 21, June 18, 2012.
[99] *Id.*
[100] NITL Reply 22, June 18, 2012.
[101] NGFA Comments 9–10, May 17, 2012.
[102] NGFA Comments 10, May 17, 2012.
[103] *Id.*
[104] WCTL Reply 7, June 18, 2012.
[105] *Id.*

[106] *See generally* Alternative Dispute Resolution, 60 FR 19494, 19499–500 (April 19, 1995) (codified at 18 CFR 385.605 (Rule 605)) (describing FERC's arbitral review process).

[107] Public Hr'g Tr., 17, Aug. 2, 2012.
[108] *Id.* at 28.
[109] *Id.* at 29.
[110] *Id.* at 54.
[111] *Id.* at 58.
[112] *Id.* at 115.
[113] UP Comments 12, May 17, 2012.
[114] AAR Comments 21–22, May 17, 2012.
[115] *Id.* at 21.
[116] WCTL Comments 6, May 17, 2012.

of its new rules to be applied to all cases, or at least consider eliminating the document-destruction requirement contained in proposed rule § 1109.3(f)(1).[117]

The UTU–NY opposes the proposed changes to the mediation rules. It objects to the scope of the mediation proposal, and argues that mediation should not be available in labor-management disputes because they are better left to other agencies, statutes, or private resolution.[118]

Having considered the comments and testimony of the parties, the Board revises its rules at Part 1109 to allow the Board to order mediation in certain types of disputes (those in which the Board is not required to grant or deny a license or other regulatory approval or exemption, and those that do not involve labor protection) before the Board. The final rules also permit the Board to institute mediation at the mutual request of all parties to a dispute. The Board may also order the parties to participate in mediation of a dispute when requested by only one party to the proceeding or on the Board's own initiative. Authority to grant voluntary mediation requests is delegated to the Director of the Board's Office of Proceedings. The Board may compel mediation or grant a mediation request at any time in an eligible proceeding.[119] The Board will appoint one or more Board employees with mediation training, unless the parties mutually agree to a non-Board mediator and so inform the Board. If the parties use a non-Board mediator, they shall mutually assume responsibility for paying the fees and/or costs of the mediator. Mediation periods shall last for up to 30 days, although this time may be extended upon the mutual request of the parties. The Board will remove the confidentiality requirement that parties and mediators destroy all mediation related notes at the conclusion of mediation. The Board reserves the right to stay proceedings and toll any applicable statutory deadlines pending the conclusion of a 30-day mediation period when all parties voluntarily consent to mediation. The Board will not stay proceedings or toll applicable statutory deadlines where one or more parties does not voluntarily consent to mediation or as provided in the rules governing rate cases.[120]

The proposed rules, which would govern both the use of mediation and arbitration in Board proceedings, are set forth in Appendix A.

Regulatory Flexibility Act

The Regulatory Flexibility Act of 1980 (RFA), 5 U.S.C. 601–612, generally requires a description and analysis of rules that would have significant economic impact on a substantial number of small entities. In drafting a rule, an agency is required to: (1) Assess the effect that its regulation would have on small entities; (2) analyze effective alternatives that might minimize a regulation's impact; and (3) make the analysis available for public comment. 5 U.S.C. 601–604. Under § 605(b), an agency is not required to perform an initial or final regulatory flexibility analysis if it certifies that the proposed or final rules will not have a ''significant impact on a substantial number of small entities.''

Insofar as the goal of the RFA is to reduce the cost to small entities of complying with federal regulations, the RFA requires an agency to perform a regulatory flexibility analysis of small entity impacts only when a rule directly regulates those entities. In other words, the impact must be a direct impact on small entities ''whose conduct is circumscribed or mandated'' by the proposed rule. *White Eagle Coop. Ass'n* v. *Conner,* 553 F.3d 467, 480 (7th Cir. 2009). An agency has no obligation to conduct a small entity impact analysis of effects on entities that it does not regulate. *United Dist. Cos.* v. *FERC,* 88 F.3d 1105, 1170 (D.C. Cir. 1996).

These final rules clarify and simplify the existing procedures for two alternative dispute resolution processes to formal adjudications before the Board. First, the rules permit carriers and shippers to agree voluntarily to resolve certain kinds of disputes before the Board under a newly-defined arbitration program. Second, the rules permit parties to agree voluntarily, and sometimes could require parties, to mediate certain kinds of disputes before the Board.

Although these alternative dispute resolution processes are available to all rail carriers, including small entities,[121] these rules will not have a significant impact on a substantial number of small entities. For the most part, these final rules provide for voluntary mediation and arbitration. Regulated entities are not required to engage in additional regulatory compliance as the procedures are optional. Even in the case of Board-ordered mediation, there are no additional regulatory compliance requirements as mediation will be conducted pursuant to a formal complaint filed with the Board. Under the final rules, any resolution reached through mediation would be the result of the mutual agreement of the parties, including small entities, not as a result of a Board-imposed decision. With respect to arbitration, which is entirely voluntary, that process is designed to consume less time and be less costly than formal complaint proceedings, thus permitting the parties to obtain relief at a greater net value. To the extent that these final rules have any impact, it is expected to result in faster resolution of controversies before the Board at a lower cost. Therefore, the Board certifies under 5 U.S.C. 605(b) that these rules will not have a significant economic impact on a substantial number of small entities within the meaning of the RFA.

Paperwork Reduction Act

In a supplemental **Federal Register** notice, published at 77 FR 23208 on April 8, 2012, the Board sought comments pursuant to the Paperwork Reduction Act (PRA), 44 U.S.C. 3501–3549, and Office of Management and Budget (OMB) regulations at 5 CFR 1320.11, regarding: (1) Whether the collection of information associated with the proposed arbitration program is necessary for the proper performance of the functions of the Board, including whether the collection has practical utility; (2) the accuracy of the Board's burden estimates; (3) ways to enhance the quality, utility, and clarity of the information collected; and (4) ways to minimize the burden of the collection of information on the respondents, including the use of automated collection techniques or other forms of information technology, when appropriate. None of the comments received specifically referenced these questions. Several of the comments discussed above, however, could be viewed to argue that requiring opt-in letters would be more practical and less burdensome than requiring opt-out letters and the final rule adopts that change.

The proposed rules were submitted to OMB for review as required under the PRA, 44 U.S.C. 3507(d), and 5 CFR 1320.11. No comments were received from OMB, which assigned to the collection Control No. 2140–0020. The display of a currently valid OMB control

[117] *Id.*

[118] UTU–NY Comments 8, May 17, 2012.

[119] Pursuant to 49 CFR 1109.4, mediation must occur soon after the filing of a complaint in rate reasonable cases.

[120] *See* 49 CFR part 1111.

[121] The Small Business Administration's Office of Size Standards has established a size standard for rail transportation, pursuant to which a line-haul railroad is considered small if its number of employees is 1,500 or less, and a short line railroad is considered small if its number of employees is 500 or less. 13 CFR 121.201 (industry subsector 482).

number for this collection is required by law. Under the PRA and 5 CFR 1320.11, an agency may not conduct or sponsor, and a person is not required to respond to, a collection of information unless the collection displays a currently valid OMB control number. As required, simultaneously with the publication of this final rule, the Board is submitting this modified collection to OMB for review.

This action will not significantly affect either the quality of the human environment or the conservation of energy resources.

This rulemaking will affect the following subjects: §§ 1002.2, 1011.7, 1108, 1109.1, 1109.2, 1109.3, 1111.10, and 1115.8, of title 49, chapter X, of the Code of Federal Regulations. It is issued subject to the Board's authority under 49 U.S.C. 721(a).

It is ordered:

1. The Board adopts the final rules as set forth in this decision. Notice of the adopted rules will be published in the **Federal Register**.

2. This decision is effective 30 days after the day of service.

Raina S. White,

Clearance Clerk.

List of Subjects

49 CFR Part 1002

Administrative practice and procedure, Common carriers, Freedom of information.

49 CFR Part 1011

Administrative practice and procedure, Authority delegations (Governmnent agencies), Organization and functions (Government agencies).

49 CFR Part 1108

Administrative practice and procedure, Railroads.

49 CFR Part 1109

Administrative practice and procedure, Maritime carriers, Motor carriers, Railroads.

49 CFR Part 1111

Administrative practice and procedure, Investigations.

49 CFR Part 1115

Administrative practice and procedure.

Decided: May 10, 2013.

By the Board, Chairman Elliott, Vice Chairman Begeman, and Commissioner Mulvey.

Jeffrey Herzig,

Clearance Clerk.

For the reasons set forth in the preamble, the Surface Transportation Board amends parts 1002, 1011, 1108, 1109, 1111, and 1115 of title 49, chapter X, of the Code of Federal Regulations as follows:

PART 1002—FEES

■ 1. The authority citation for part 1002 is revised to read as follows:

Authority: 5 U.S.C. 552(a)(4)(A) and 553; 31 U.S.C. 9701; and 49 U.S.C. 721. Section 1002.1(g)(11) is also issued under 5 U.S.C. 5514 and 31 U.S.C. 3717.

■ 2. Amend § 1002.2 by revising paragraphs (f)(87) and (f)(88) to read as follows:

§ 1002.2 Filing fees.

* * * * *

(f) * * *

Type of proceeding	Fee
* * * * *	
Part VI: Informal Proceedings	
* * * * *	
(87) Arbitration of Certain Disputes Subject to the Statutory Jurisdiction of the Surface Transportation Board under 49 CFR part 1108:	
(i) Complaint	$75
(ii) Answer (per defendant), Unless Declining to Submit to Any Arbitration	75
(iii) Third Party Complaint	75
(iv) Third Party Answer (per defendant), Unless Declining to Submit to Any Arbitration	75
(v) Appeals of Arbitration Decisions or Petitions to Modify or Vacate an Arbitration Award	150
(88) Basic fee for STB adjudicatory services not otherwise covered	250
* * * * *	

* * * * *

PART 1011—BOARD ORGANIZATION; DELEGATIONS OF AUTHORITY

■ 3. The authority citation for part 1011 continues to read as follows:

Authority: 5 U.S.C. 553; 31 U.S.C. 9701; 49 U.S.C. 701, 721, 11123, 11124, 11144, 14122, and 15722.

■ 4. Amend § 1011.7 by adding paragraphs (a)(2)(xvii), (a)(2)(xviii), and (a)(2)(xix) to read as follows:

§ 1011.7 Delegations of authority by the Board to specific offices of the Board.

(a) * * *

(2) * * *

(xvii) To authorize parties to a proceeding before the Board, upon mutual request, to participate in meditation with a Board-appointed mediator, for a period of up to 30 days and to extend the mediation period at the mutual request of the parties.

(xviii) To authorize a proceeding to be held in abeyance while mediation procedures are pursued, pursuant to the mutual request of the parties to the matter.

(xix) To order arbitration of program-eligible matters under the Board's regulations at 49 CFR part 1108, or upon the mutual request of parties to a proceeding before the Board.

* * * * *

■ 5. Revise part 1108 to read as follows:

PART 1108—ARBITRATION OF CERTAIN DISPUTES SUBJECT TO THE STATUTORY JURISDICTION OF THE SURFACE TRANSPORTATION BOARD

Sec.

1108.1 Definitions.
1108.2 Statement of purpose, organization, and jurisdiction.
1108.3 Participation in the Board's arbitration program.
1108.4 Use of arbitration.
1108.5 Arbitration commencement procedures.
1108.6 Arbitrators.
1108.7 Arbitration procedures.
1108.8 Relief.
1108.9 Decisions.
1108.10 Precedent.
1108.11 Enforcement and appeals.
1108.12 Fees and costs.
1108.13 Additional parties per side.

Authority: 49 U.S.C. 721(a) and 5 U.S.C. 571 *et seq.*

§ 1108.1 Definitions.

As used in this part:

(a) *Arbitrator* means a single person appointed to arbitrate pursuant to these rules.

(b) *Arbitrator Panel* means a group of three people appointed to arbitrate pursuant to these rules. One panel member would be selected by each side to the arbitration dispute, and the parties would mutually agree to the selection of the third-neutral arbitrator under the ''strike'' methodology described in § 1108.6(c).

(c) *Arbitration program* means the program established by the Surface Transportation Board in this part under which participating parties, including rail carriers and shippers, have agreed voluntarily in advance, or on a case-by-case basis to resolve disputes about arbitration-program-eligible matters brought before the Board using the Board's arbitration procedures.

(d) *Arbitration-program-eligible matters* are those disputes or components of disputes, that may be resolved using the Board's arbitration

program and include disputes involving one or more of the following subjects: Demurrage; accessorial charges; misrouting or mishandling of rail cars; and disputes involving a carrier's published rules and practices as applied to particular rail transportation.

(e) *Counterclaim* is an independent arbitration claim filed by a respondent against a complainant arising out of the same set of circumstances or is substantially related to the underlying arbitration complaint and subject to the Board's jurisdiction.

(f) *Final arbitration decision* is the unredacted decision served upon the parties 30 days after the close of the arbitration's evidentiary phase.

(g) *Interstate Commerce Act* means the Interstate Commerce Act as amended by the ICC Termination Act of 1995.

(h) *Monetary award cap* means a limit on awardable damages of $200,000 per case, unless the parties mutually agree to a different award cap. If parties bring one or more counterclaims, such counterclaims will be subject to a separate monetary award cap of $200,000 per case, unless the parties mutually agree to a different award cap.

(i) *Neutral Arbitrator* means the arbitrator selected by the strike methodology outlined in § 1108.6(c).

(j) *Statutory jurisdiction* means the jurisdiction conferred on the STB by the Interstate Commerce Act, including jurisdiction over rail transportation or services that have been exempted from regulation.

(k) *STB* or *Board* means the Surface Transportation Board.

§ 1108.2 Statement of purpose, organization, and jurisdiction.

(a) *The Board's intent.* The Board favors the resolution of disputes through the use of mediation and arbitration procedures, in lieu of formal Board proceedings, whenever possible. This section provides for the creation of a binding, voluntary arbitration program in which parties, including shippers and railroads, agree in advance to arbitrate certain types of disputes with a limit on potential liability of $200,000 unless the parties mutually agree to a different award cap. The Board's arbitration program is open to all parties eligible to bring or defend disputes before the Board.

(1) Except as discussed in paragraph (b) of this section, parties to arbitration may agree by mutual written consent to arbitrate additional matters and to a different amount of potential liability than the monetary award cap identified in this section.

(2) Nothing in these rules shall be construed in a manner to prevent parties from independently seeking or utilizing private arbitration services to resolve any disputes they may have.

(b) *Limitations to the Board's Arbitration Program.* These procedures shall not be available for disputes involving labor protective conditions, which have their own procedures. These procedures shall not be available to obtain the grant, denial, stay or revocation of any license, authorization (e.g., construction, abandonment, purchase, trackage rights, merger, pooling), or exemption related to such matters. Parties may only use these arbitration procedures to arbitrate matters within the statutory jurisdiction of the Board.

§ 1108.3 Participation in the Board's arbitration program.

(a) *Opt-in procedures.* Any rail carrier, shipper, or other party eligible to bring or defend disputes before the Board may at any time voluntarily choose to opt into the Board's arbitration program. Opting in may be for a particular dispute or for all potential disputes before the Board unless and until the party exercises the opt-out procedures discussed in § 1108.3(b). To opt in parties may either:

(1) File a notice with the Board, under Docket No. EP 699, advising the Board of the party's intent to participate in the arbitration program. Such notice may be filed at any time and shall be effective upon receipt by the Board.

(i) Notices filed with the Board shall state which arbitration-program-eligible issue(s) the party is willing to submit to arbitration.

(ii) Notices may, at the submitting party's discretion, provide for a different monetary award cap.

(2) Participants to a proceeding, where one or both parties have not opted into the arbitration program, may by joint notice agree to submit an issue in dispute to the Board's arbitration program.

(i) The joint notice must clearly state the issue(s) which the parties are willing to submit to arbitration and the corresponding maximum monetary award cap if the parties desire to arbitrate for a different amount than the Board's $200,000 monetary award cap.

(b) *Opt-out procedures.* Any party who has elected to participate in the arbitration program may file a notice at any time under Docket No. EP 699, informing the Board of the party's decision to opt out of the program or amend the scope of its participation. The notice shall take effect 90 days after filing and shall not excuse the filing party from arbitration proceedings that are ongoing, or permit it to withdraw its consent to participate in any arbitration-program-eligible dispute associated with their opt-in notice for any matter before the Board at any time within that 90 day period before the opt-out notice takes effect

(c) *Public notice of arbitration program participation.* The Board shall maintain a list of participants who have opted into the arbitration program on its Web site at *www.stb.dot.gov.* Those parties participating in arbitration on a case-by-case basis will not be listed on the Board's Web site.

§ 1108.4 Use of arbitration.

(a) *Arbitration-program-eligible matters.* Matters eligible for arbitration under the Board's program are: Demurrage; accessorial charges; misrouting or mishandling of rail cars; and disputes involving a carrier's published rules and practices as applied to particular rail transportation. Parties may agree in writing to arbitrate additional matters on a case-by-case basis as provided in paragraph (e) of this section.

(b) *Monetary award cap.* Arbitration claims may not exceed the arbitration program award cap of $200,000 per arbitral proceeding unless:

(1) The defending party's opt-in notice provides for a different monetary cap or;

(2) The parties agree to select a different award cap that will govern their arbitration proceeding. The parties may change the award cap by incorporating an appropriate provision in their agreement to arbitrate.

(3) Counterclaims will not offset against the monetary award cap of the initiating claim. A counterclaim is an independent claim and is subject to a monetary award cap of $200,000 per case, separate from the initiating claim, or to a different cap agreed upon by the parties in accordance with § 1108.4(b)(2).

(c) *Assignment of arbitration-program-eligible matter*s. The Board shall assign to arbitration all arbitration-program-eligible disputes arising in a docketed proceeding where all parties to the proceeding are participants in the Board's arbitration program, or where one or more parties to the matter are participants in the Board's arbitration program, and all other parties to the proceeding request or consent to arbitration.

(d) *Matters partially arbitration-program-eligible.* Where the issues in a proceeding before the Board relate in part to arbitration-program-eligible matters, only those parts of the dispute

related to arbitration-program-eligible matters may be arbitrated pursuant to the arbitration program, unless the parties petition the Board in accordance with paragraph (e) of this section to include additional disputes.

(e) *Other matters.* Parties may petition the Board, on a case-by-case basis, to assign to arbitration disputes, or portions of disputes, not listed as arbitration-program-eligible matters. This may include counterclaims and affirmative defenses. The Board will not consider for arbitration types of disputes which are expressly prohibited in § 1108.2(b).

(f) *Arbitration clauses.* Nothing in the Board's regulations shall preempt the applicability of, or otherwise supersede, any new or existing arbitration clauses contained in agreements between shippers and carriers.

§ 1108.5 Arbitration commencement procedures.

(a) *Complaint.* Arbitration under these rules shall commence with a written complaint, which shall be filed and served in accordance with Board rules contained at part 1104 of this chapter. Each complaint must contain a statement that the complainant and the respondent are participants in the Board's arbitration program pursuant to § 1108.3(a), or that the complainant is willing to arbitrate voluntarily all or part of the dispute pursuant to the Board's arbitration procedures, and the relief requested.

(1) If the complainant desires arbitration with a single-neutral arbitrator instead of a three-member arbitration panel, the complaint must make such a request in its complaint.

(2) If the complainant is not a participant in the arbitration program, the complaint may specify the issues that the complainant is willing to arbitrate.

(3) If the complainant desires to set a different amount of potential liability than the $200,000 monetary award cap, the complaint should specify what amount of potential liability the complainant is willing to incur.

(b) *Answer to the complaint.* Any respondent must, within 20 days of the date of the filing of a complaint, answer the complaint. The answer must state whether the respondent is a participant in the Board's arbitration program, or whether the respondent is willing to arbitrate the particular dispute.

(1) If the complaint requests arbitration by a single-neutral arbitrator instead of by an arbitration panel, the answer must contain a statement consenting to arbitration by a single-neutral arbitrator or an express rejection of the request.

(i) The respondent may also initiate a request to use a single-neutral arbitrator instead of an arbitration panel.

(ii) Absent the parties agreeing to arbitration through a single-neutral arbitrator, the Board will assign the case to arbitration by a panel of three arbitrators as provided by § 1108.6(a)–(c). The party requesting the single-neutral arbitrator shall at that time provide written notice to the Board and the other parties if it continues to object to a three-member arbitration panel. Upon timely receipt of the notice, the Board shall the set the matter for formal adjudication.

(2) When the complaint specifies a limit on the arbitrable issues, the answer must state whether the respondent is willing to resolve those issues through arbitration.

(i) If the answer contains an agreement to arbitrate some but not all of the arbitration issues in the arbitration complaint, the complainant will have 10 days from the date of the answer to advise the respondent and the Board in writing whether the complainant is willing to arbitrate on that basis.

(ii) Where the respondent is a participant in the Board's arbitration program, the answer should further state that the respondent has thereby agreed to use arbitration to resolve all of the arbitration-program-eligible issues in the complaint. The Board will then set the matter for arbitration, and provide a list of arbitrators.

(3) When the complaint proposes a different amount of potential liability, the answer must state whether the respondent agrees to that amount in lieu of the $200,000 monetary award cap.

(c) *Counterclaims.* In answering a complaint, the respondent may file one or more counterclaims against the complainant if such claims arise out of the same set of circumstances or are substantially related, and are subject to the Board's jurisdiction as provided in § 1108.2(b). Counterclaims are subject to the assignment provisions contained in § 1108.4(c)–(e). Counterclaims are subject to the monetary award cap provisions contained in § 1108.4(b)(2)–(3).

(d) *Affirmative defenses.* An answer to an arbitration complaint shall contain specific admissions or denials of each factual allegation contained in the complaint, and any affirmative defenses that the respondent wishes to assert against the complainant.

(e) *Arbitration agreement.* Prior to the commencement of an arbitration proceeding, the parties to arbitration together with the neutral arbitrator shall create a written arbitration agreement, which at a minimum will state with specificity the issues to be arbitrated and the corresponding monetary award cap to which the parties have agreed. The agreement may contain other mutually agreed upon provisions.

(1) Any additional issues selected for arbitration by the parties, that are not outside the scope of these arbitration rules as explained in § 1108.2(b), must be subject to the Board's statutory authority.

(2) These rules shall be incorporated by reference into any arbitration agreement conducted pursuant to an arbitration complaint filed with the Board.

§ 1108.6 Arbitrators.

(a) *Panel of arbitrators.* Unless otherwise requested in writing pursuant to § 1108.5(a)(1), all matters arbitrated under these rules shall be resolved by a panel of three arbitrators.

(b) *Party-appointed arbitrators.* The party or parties on each side of an arbitration dispute shall select one arbitrator, and serve notice of the selection upon the Board and the opposing party within 20 days of an arbitration answer being filed.

(1) Parties on one side of an arbitration proceeding may not challenge the arbitrator selected by the opposing side.

(2) Parties to an arbitration proceeding are responsible for the costs of the arbitrator they select.

(c) *Selecting the neutral arbitrator.* The Board shall provide the parties with a list of five neutral arbitrators within 20 days of an arbitration answer being filed. When compiling a list of neutral arbitrators for a particular arbitration proceeding, the Board will conduct searches for arbitration experts by contacting appropriate professional arbitration associations. The parties will have 14 days from the date the Board provides them with this list to select a neutral arbitrator using a single strike methodology. The complainant will strike one name from the list first. The respondent will then have the opportunity to strike one name from the list. The process will then repeat until one individual on the list remains, who shall be the neutral arbitrator.

(1) The parties are responsible for conducting their own due diligence in striking names from the neutral arbitrator list. The final selection of a neutral arbitrator is not challengeable before the Board.

(2) The parties shall split the cost of the neutral arbitrator.

(3) The neutral arbitrator appointed through the strike methodology shall serve as the head of the arbitration panel and will be responsible for ensuring that the tasks detailed in §§ 1108.7 and 1108.9 are accomplished.

(d) *Use of a single arbitrator.* Parties to arbitration may request the use of a single-neutral arbitrator. Requests for use of a single-neutral arbitrator must be included in a complaint or an answer as required in § 1108.5(a)(1). Parties to both sides of an arbitration dispute must agree to the use of a single-neutral arbitrator in writing. If the single-arbitrator option is selected, the arbitrator selection procedures outlined in § 1108.6(c) shall apply.

(e) *Arbitrator incapacitation.* If at any time during the arbitration process a selected arbitrator becomes incapacitated or is unwilling or unable to fulfill his or her duties, a replacement arbitrator shall be promptly selected by either of the following processes:

(1) If the incapacitated arbitrator was appointed directly by a party to the arbitration, the appointing party shall, without delay, appoint a replacement arbitrator pursuant to the procedures set forth in § 1108.6(b).

(2) If the incapacitated arbitrator was the neutral arbitrator, the parties shall promptly inform the Board of the neutral arbitrator's incapacitation and the selection procedures set forth in § 1108.6(c) shall apply.

§ 1108.7 Arbitration procedures.

(a) *Arbitration evidentiary phase timetable.* Whether the parties select a single arbitrator or a panel of three arbitrators, the neutral arbitrator shall establish all rules deemed necessary for each arbitration proceeding, including with regard to discovery, the submission of evidence, and the treatment of confidential information, subject to the requirement that this evidentiary phase shall be completed within 90 days from the start date established by the neutral arbitrator.

(b) *Written decision timetable.* The neutral arbitrator will be responsible for writing the arbitration decision. The unredacted arbitration decision must be served on the parties within 30 days of completion of the evidentiary phase. A redacted copy of the arbitration decision must be served upon the Board within 60 days of the close of the evidentiary phase for publication on the Board's Web site.

(c) *Extensions to the arbitration timetable.* Petitions for extensions to the arbitration timetable shall only be considered in cases of arbitrator incapacitation as detailed in § 1108.6(e).

(d) *Protective orders.* Any party, on either side of an arbitration proceeding, may request that discovery and the submission of evidence be conducted pursuant to a standard protective order agreement.

§ 1108.8 Relief.

(a) *Relief available.* An arbitrator may grant relief in the form of monetary damages to the extent they are available under this part or as agreed to in writing by the parties.

(b) *Relief not available.* No injunctive relief shall be available in Board arbitration proceedings.

§ 1108.9 Decisions.

(a) *Decision requirements.* Whether by a panel of arbitrators or a single-neutral arbitrator, all arbitration decisions shall be in writing and shall contain findings of fact and conclusions of law. The neutral arbitrator shall provide an unredacted draft of the arbitration decision to the parties to the dispute.

(b) *Redacting arbitration decision.* The neutral arbitrator shall also provide the parties with a draft of the decision that redacts or omits all proprietary business information and confidential information pursuant to any such requests of the parties under the arbitration agreement.

(c) *Party input.* The parties may then suggest what, if any, additional redactions they think are required to protect against the disclosure of proprietary and confidential information in the decision.

(d) *Neutral arbitrator authority.* The neutral arbitrator shall retain the final authority to determine what additional redactions are appropriate to make.

(e) *Service of arbitration decision.* The neutral arbitrator shall serve copies of the unredacted decision upon the parties in accordance with the timetable and requirements set forth in § 1108.7(b). The neutral arbitrator shall also serve copies of the redacted decision upon the parties and the Board in accordance with the timetable and requirements set forth in § 1108.7(b). The arbitrator may serve the decision via any service method permitted by the Board's regulations.

(f) *Service in the case of an appeal.* In the event an arbitration decision is appealed to the Board, the neutral arbitrator shall, without delay and under seal, serve upon the Board an unredacted copy of the arbitration decision.

(g) *Publication of decision.* Redacted copies of the arbitration decisions shall be published and maintained on the Board's Web site.

(h) *Arbitration decisions are binding.* By arbitrating pursuant to these procedures, each party agrees that the decision and award of the arbitrator(s) shall be binding and judicially enforceable in any court of appropriate jurisdiction, subject to the rights of appeal provided in § 1108.11.

§ 1108.10 Precedent.

Decisions rendered by arbitrators pursuant to these rules may be guided by, but need not be bound by, agency precedent. Arbitration decisions shall have no precedential value and may not be relied upon in any manner during subsequent arbitration proceedings conducted under the rules in this part.

§ 1108.11 Enforcement and appeals.

(a) *Petitions to modify or vacate.* A party may petition the Board to modify or vacate an arbitral award. The appeal must be filed within 20 days of service of a final arbitration decision, and is subject to the page limitations of § 1115.2(d) of this chapter. Copies of the appeal shall be served upon all parties in accordance with the Board's rules at part 1104 of this chapter. The appealing party shall also serve a copy of its appeal upon the arbitrator(s). Replies to such appeals shall be filed within 20 days of the filing of the appeal with the Board, and shall be subject to the page limitations of § 1115.2(d) of this chapter.

(b) *Board's standard of review.* On appeal, the Board's standard of review of arbitration decisions will be narrow, and relief will be granted only on grounds that the award reflects a clear abuse of arbitral authority or discretion or directly contravenes statutory authority. Using this standard, the Board may modify or vacate an arbitration award in whole or in part.

(1) Board decisions vacating or modifying arbitration decisions under the Board's standard of review are reviewable under the Hobbs Act, 28 U.S.C. 2321 and 2342.

(2) Nothing in these rules shall prevent parties to arbitration from seeking judicial review of arbitration awards in a court of appropriate jurisdiction pursuant to the Federal Arbitration Act, 9 U.S.C. 9–13, in lieu of seeking Board review.

(c) *Staying arbitration decision.* The timely filing of a petition for review of the arbitral decision by the Board will not automatically stay the effect of the arbitration decision. A stay may be requested under § 1115.3(f) of this chapter.

(d) *Enforcement.* Parties seeking to enforce an arbitration decision made pursuant to the Board's arbitration program must petition a court of

appropriate jurisdiction under the Federal Arbitration Act, 9 U.S.C. 9–13.

§ 1108.12 Fees and costs.

(a) *Filing fees.* When parties use the Board's arbitration procedures to resolve a dispute, the party filing the complaint or an answer shall pay the applicable filing fee pursuant to 49 CFR part 1002.

(b) *Party costs.* When an arbitration panel is used, each party (or side to a dispute) shall pay the costs associated with the arbitrator it selects. The cost of the neutral arbitrator shall be shared equally between the opposing parties (or sides) to a dispute.

(c) *Single arbitrator method.* If the single arbitrator method is utilized in place of the arbitration panel, the parties shall share equally the costs of the neutral arbitrator.

(d) *Board costs.* Regardless of whether there is a single arbitrator or a panel of three arbitrators, the Board shall pay the costs associated with the preparation of a list of neutral arbitrators.

§ 1108.13 Additional parties per side.

Where an arbitration complaint is filed by more than one complainant in a particular arbitration proceeding against, or is answered or counterclaimed by, more than one respondent, these arbitration rules will apply to the complainants as a group and the respondents as a group in the same manner as they will apply to individual opposing parties.

■ 6. Revise Part 1109 to read as follows:

PART 1109—USE OF MEDIATION IN BOARD PROCEEDINGS

Sec.

1109.1 Mediation statement of purpose, organization, and jurisdiction.
1109.2 Commencement of mediation.
1109.3 Mediation procedures.
1109.4 Mandatory mediation in rate cases to be considered under the stand-alone cost methodology.

Authority: 49 U.S.C. 721(a) and 5 U.S.C. 571 *et seq.*

§ 1109.1 Mediation statement of purpose, organization, and jurisdiction.

The Board favors the resolution of disputes through the use of mediation and arbitration procedures, in lieu of formal Board proceedings, whenever possible. Parties may seek to resolve a dispute brought before the Board using the Board's mediation procedures. These procedures shall not be available in a regulatory proceeding to obtain the grant, denial, stay or revocation of a request for construction, abandonment, purchase, trackage rights, merger, pooling authority or exemption related to such matters. The Board may, by its own order, direct the parties to participate in mediation using the Board's mediation procedures. The Board's mediation program is open to all parties eligible to bring or defend matters before the Board.

§ 1109.2 Commencement of mediation.

(a) *Availability of mediation.* Mediation may be commenced in a dispute before the Board:

(1) Pursuant to a Board order issued in response to a written request of one or more parties to a matter;

(2) Where the Board orders mediation by its own order; or

(3) In connection with a rate complaint, as provided by § 1109.4 and part 1111 of this chapter.

(b) *Requests for mediation.* Parties wishing to pursue mediation may file a request for mediation with the Board at any time following the filing of a complaint. Parties that use the Board's mediation procedures shall not be required to pay any fees other than the appropriate filing fee associated with the underlying dispute, as provided at 49 CFR 1002.2. The Board shall grant any mediation request submitted by all parties to a matter, but may deny mediation where one or more parties to the underlying dispute do not consent to mediation, or where the parties seek to mediate disputes not eligible for Board-sponsored mediation, as listed in § 1109.1.

§ 1109.3 Mediation procedures.

(a) *Mediation model.* The Chairman will appoint one or more Board employees trained in mediation to mediate any dispute assigned for mediation. Alternatively, the parties to a matter may agree to use a non-Board mediator if they so inform the Board within 10 days of an order assigning the dispute to mediation. If a non-Board mediator is used, the parties shall share equally the fees and/or costs of the mediator. The following restrictions apply to any mediator selected by the Board or the parties:

(1) No person serving as a mediator may thereafter serve as an advocate for a party in any other proceeding arising from or related to the mediated dispute, including, without limitation, representation of a party to the mediation before any other federal court or agency; and

(2) If the mediation does not fully resolve all issues in the docket before the Board, the Board employees serving as mediators may not thereafter advise the Board regarding the future disposition of the remaining issues in the docket.

(b) *Mediation period.* The mediation period shall be 30 days, beginning on the date of the first mediation session. The Board may extend mediation for additional periods of time not to exceed 30 days per period, pursuant to mutual written requests of all parties to the mediation proceeding. The Board will not extend mediation for additional periods of time where one or more parties to mediation do not agree to an extension. The Board will not order mediation more than once in any particular proceeding, but may permit it if all parties to a matter mutually request another round of mediation. The mediator(s) shall notify the Board whether the parties have reached any agreement by the end of the 30-day period.

(c) *Party representatives.* At least one principal of each party, who has the authority to bind that party, shall participate in the mediation and be present at any session at which the mediator(s) request that principal to be present.

(d) *Confidentiality.* Mediation is a confidential process, governed by the confidentiality rules of the Administrative Dispute Resolution Act of 1996 (ADRA) (5 U.S.C. 574). In addition to the confidentiality rules set forth in the ADRA, the Board requires the following additional confidentiality protections:

(1) All parties to Board sponsored mediation will sign an Agreement to Mediate. The Agreement to Mediate shall incorporate these rules by reference.

(2) As a condition of participation, the parties and any interested parties joining the mediation must agree to the confidentiality of the mediation process as provided in this section and further detailed in an agreement to mediate. The parties to mediation, including the mediator(s), shall not testify in administrative or judicial proceedings concerning the issues discussed in mediation, nor submit any report or record of the mediation discussions, other than the settlement agreement with the consent of all parties, except as required by law.

(3) Evidence of conduct or statements made during mediation is not admissible in any Board proceeding. If mediation fails to result in a full resolution of the dispute, evidence that is otherwise discoverable may not be excluded from introduction into the record of the underlying proceeding merely because it was presented during mediation. Such materials may be used if they are disclosed through formal discovery procedures established by the Board or other adjudicatory bodies.

(e) *Abeyance.* Except as otherwise provided for in § 1109.4(f) and part 1111 of this chapter, any party may request that a proceeding be held in abeyance while mediation procedures are pursued. Any such request should be submitted to the Chief, Section of Administration, Office of Proceedings. The Board shall promptly issue an order in response to such requests. Except as otherwise provided for in § 1109.4(g) and part 1111 of this chapter, the Board may also direct that a proceeding be held in abeyance pending the conclusion of mediation. Where both parties to mediation voluntarily consent to mediation, the period during which any proceeding is held in abeyance shall toll applicable statutory deadlines. Where one or both parties to mediation do not voluntarily consent to mediation, the Board will not hold the underlying proceeding in abeyance and statutory deadlines will not be tolled.

(f) *Mediated settlements.* Any settlement agreement reached during or as a result of mediation must be in writing, and signed by all parties to the mediation. The parties need not provide a copy of the settlement agreement to the Board, or otherwise make the terms of the agreement public, but the parties, or the mediator(s), shall notify the Board that the parties have reached a mutually agreeable resolution and request that the Board terminate the underlying Board proceeding. Parties to the settlement agreement shall waive all rights of administrative appeal to the issues resolved by the settlement agreement.

(g) *Partial resolution of mediated issues.* If the parties reach only a partial resolution of their dispute, they or the mediator(s) shall so inform the Board, and the parties shall file any stipulations they have mutually reached, and ask the Board to reactivate the procedural schedule in the underlying proceeding to decide the remaining issues.

§ 1109.4 Mandatory mediation in rate cases to be considered under the stand-alone cost methodology.

(a) *Mandatory use of mediation.* A shipper seeking rate relief from a railroad or railroads in a case involving the stand-alone cost methodology must engage in non-binding mediation of its dispute with the railroad upon filing a formal complaint under 49 CFR part 1111.

(b) *Assignment of mediators.* Within 10 business days after the shipper files its formal complaint, the Board will assign one or more mediators to the case. Within 5 business days of the assignment to mediate, the mediator(s) shall contact the parties to discuss ground rules and the time and location of any meeting.

(c) *Party representatives.* At least one principal of each party, who has the authority to bind that party, shall participate in the mediation and be present at any session at which the mediator(s) requests that the principal be present.

(d) *Settlement.* The mediator(s) will work with the parties to try to reach a settlement of all or some of their dispute or to narrow the issues in dispute, and reach stipulations that may be incorporated into any adjudication before the Board if mediation does not fully resolve the dispute. If the parties reach a settlement, the mediator(s) may assist in preparing a written settlement agreement.

(e) *Confidentiality.* The entire mediation process shall be private and confidential. No party may use any concessions made or information disclosed to either the mediator(s) or the opposing party before the Board or in any other forum without the consent of the other party. The confidentiality provision of § 1109.3(d) and the mediation agreement shall apply to all mediations conducted under this section.

(f) *Mediation period.* The mediation shall be completed within 60 days of the appointment of the mediator(s). The mediation may be terminated prior to the end of the 60-day period only with the certification of the mediator(s) to the Board. Requests to extend mediation, or to re-engage it later, will be entertained on a case-by-case basis, but only if filed by all interested parties.

(g) *Procedural schedule.* Absent a specific order from the Board, the onset of mediation will not affect the procedural schedule in stand alone cost rate cases set forth at 49 CFR 1111.8(a).

PART 1111—COMPLAINT AND INVESTIGATION PROCEDURES

■ 7. The authority citation for part 1111 continues to read as follows:

Authority: 49 U.S.C. 721, 10704, and 11701.

■ 8. Amend § 1111.10 by revising paragraph (b) to read as follows:

§ 1111.10 Meeting to discuss procedural matters.

* * * * *

(b) *Simplified standards complaints.* In complaints challenging the reasonableness of a rail rate based on the simplified standards, the parties shall meet, or discuss by telephone or through email, discovery and procedural matters within 7 days after the mediation period ends. The parties should inform the Board as soon as possible thereafter whether there are unresolved disputes that require Board intervention and, if so, the nature of such disputes.

PART 1115—APPELLATE PROCEDURES

■ 9. The authority citation for part 1115 continues to read as follows:

Authority: 5 U.S.C. 559; 49 U.S.C. 721.

■ 10. Revise § 1115.8 to read as follows:

§ 1115.8 Petitions to review arbitration decisions.

An appeal of right to the Board is permitted. The appeal must be filed within 20 days of a final arbitration decision, unless a later date is authorized by the Board, and is subject to the page limitations of § 1115.2(d). The STB's standard of review of arbitration decisions will be narrow, and relief will be granted only on grounds that the award reflects a clear abuse of arbitral authority or discretion or directly contravenes statutory authority. The timely filing of a petition will not automatically stay the effect of the arbitration decision. A stay may be requested under § 1115.3(f).

Note: The following appendix will not appear in the Code of Federal Regulations.

Appendix—*Surface Transportation Board*

Agreement To Mediate

(1) *Purpose.* The parties agree to engage in mediation under the auspices of the Surface Transportation Board.

(2) *Commencement.* The mediation process commences once the Board assigns a case for mediation.

(3) *Termination.* The mediator may stop the mediation at any point if he or she feels that an impasse has been reached. The mediator will stop the mediation if he or she can no longer maintain neutrality or cannot perform his or her role in an ethical or effective manner. The mediator will discuss this decision with the parties.

(4) *Authority and Representation.* The parties shall ensure that their representatives in mediation sessions are vested with the authority to negotiate and settle the issues presented in the docketed proceeding.

(5) *Scope.* The parties are not required to reach a settlement on the issues presented in Docket No. _____. The parties may reach an agreement on some or all of the issues. The parties may engage in discussions and agreements on issues not presented in the docketed proceeding as may be necessary to reach resolution on other issues.

(6) *Procedures.* Mediation will be governed by the rules and procedures set forth at 49 CFR part 1109 and this agreement. The Board's rules governing mediation found at 49 CFR part 1109 are expressly incorporated into this agreement by reference.

(7) *Role of the Mediator.* The parties understand that the mediators are to serve as facilitators of the mediation process and are not to give the parties advice. The parties further understand that the mediators have no authority to decide the case and are not acting as an advocate or attorney for any party. The mediators may, in their best judgment, provide clarification of STB rules and regulations. The parties understand that they have a right to have legal representation present at all mediation proceedings.

(8) *Confidentiality.* Mediation is a privileged and confidential process, subject to 49 CFR 1109.3(d) and 1109.4(e). The parties agree that statements and documents are to remain confidential.

(a) *Statements.* The parties and their representatives agree that the mediation sessions are confidential settlement negotiations, which are not subject to discovery. Therefore, the parties and their representatives agree not to introduce in any subsequent forum any statements made during the mediation, unless a statement has been properly obtained through a later discovery process.

(b) *Documents.* The parties and their representatives agree that the mediation sessions are confidential settlement negotiations, which are not subject to discovery. Therefore, the parties and their representatives agree not to introduce in any subsequent forum any documents produced during the mediation, unless a document has been properly obtained through a later discovery process.

(c) *Discovery Issues.* The parties agree that mediation shall not be used as a shield to discovery in the event a settlement is not reached. Information presented at mediation that is otherwise discoverable shall remain so regardless of the mediation process. The parties agree not to subpoena the mediators or the Board's mediation program administrator to produce any documents prepared by or submitted to the mediators in any future proceedings. The mediators and the program administrator will not testify on behalf of any party or submit any type of report on the substance of the mediation.

(d) *Exceptions to Confidentiality.* The only exceptions to confidentiality are those set forth in 5 U.S.C. 574(a)–(b) of the Administrative Dispute Resolution Act of 1996.

(9) *Settlement.* No party shall be bound by anything said or done at the mediation unless a written settlement agreement is prepared and signed by all necessary parties. If a settlement is reached on some or all of the issues presented, the agreement shall be reduced to writing. The parties are responsible for reducing their agreements to a written document, though the mediators may assist the parties as necessary to reduce verbal agreements to writing.

By signature we acknowledge that we have read, understand and agree to the foregoing Agreement to Mediate.

_____
Mediation Participant

_____
Date

_____
Mediation Participant

_____
Date

_____
Mediation Participant

_____
Date

_____
Mediation Participant

_____
Date

_____
Mediator

_____
Date

_____
Mediator

_____
Date

[FR Doc. 2013–11675 Filed 5–16–13; 8:45 am]

BILLING CODE 4915–01–P

Proposed Rules

Federal Register
Vol. 78, No. 96
Friday, May 17, 2013

This section of the FEDERAL REGISTER contains notices to the public of the proposed issuance of rules and regulations. The purpose of these notices is to give interested persons an opportunity to participate in the rule making prior to the adoption of the final rules.

DEPARTMENT OF HOMELAND SECURITY

Coast Guard

33 CFR Part 165

[Docket No. USCG–2013–0326]

RIN 1625–AA00

Safety Zone; Discovery World Fireworks, Milwaukee Harbor, Milwaukee, WI

AGENCY: Coast Guard, DHS.

ACTION: Notice of proposed rulemaking.

SUMMARY: The Coast Guard proposes to establish a safety zone within Milwaukee Harbor, Milwaukee, Wisconsin. This safety zone is intended to restrict vessels from a portion of Milwaukee Harbor due to 4 fireworks displays at Discovery World Pier. This proposed safety zone is necessary to protect the surrounding public and vessels from the hazards associated with these fireworks displays.

DATES: Comments and related materials must be received by the Coast Guard on or before June 17, 2013.

ADDRESSES: You may submit comments identified by docket number USCG–2013–0326 using any one of the following methods:

(1) *Federal eRulemaking Portal: http://www.regulations.gov.*

(2) *Fax:* 202–493–2251.

(3) *Mail:* Docket Management Facility (M–30), U.S. Department of Transportation, West Building Ground Floor, Room W12–140, 1200 New Jersey Avenue SE., Washington, DC 20590–0001.

(4) *Hand delivery:* Same as mail address above, between 9 a.m. and 5 p.m., Monday through Friday, except Federal holidays. The telephone number is 202–366–9329.

To avoid duplication, please use only one of these four methods. See the ''Public Participation and Request for Comments'' portion of the **SUPPLEMENTARY INFORMATION** section below for instructions on submitting comments.

FOR FURTHER INFORMATION CONTACT: If you have questions on this proposed rule, call or email Petty Officer Joseph McCollum, U.S. Coast Guard Sector Lake Michigan; telephone 414–747–7148, email *Joseph.P.McCollum@uscg.mil*. If you have questions on viewing or submitting material to the docket, call Barbara Hairston, Program Manager, Docket Operations, telephone (202) 366–9826.

SUPPLEMENTARY INFORMATION:

Table of Acronyms

DHS—Department of Homeland Security
FR—Federal Register
NPRM—Notice of Proposed Rulemaking

A. Public Participation and Request for Comments

We encourage you to participate in this rulemaking by submitting comments and related materials. All comments received will be posted without change to *http://www.regulations.gov* and will include any personal information you have provided.

1. Submitting Comments

If you submit a comment, please include the docket number for this rulemaking, indicate the specific section of this document to which each comment applies, and provide a reason for each suggestion or recommendation. You may submit your comments and material online at *http://www.regulations.gov*, or by fax, mail, or hand delivery, but please use only one of these means. If you submit a comment online, it will be considered received by the Coast Guard when you successfully transmit the comment. If you fax, hand deliver, or mail your comment, it will be considered as having been received by the Coast Guard when it is received at the Docket Management Facility. We recommend that you include your name and a mailing address, an email address, or a telephone number in the body of your document so that we can contact you if we have questions regarding your submission.

To submit your comment online, go to *http://www.regulations.gov*, type the docket number (USCG–2013–0326) in the ''SEARCH'' box and click ''SEARCH.'' Click on ''Submit a Comment'' on the line associated with this rulemaking.

If you submit your comments by mail or hand delivery, submit them in an unbound format, no larger than 8½ by 11 inches, suitable for copying and electronic filing. If you submit comments by mail and would like to know that they reached the Facility, please enclose a stamped, self-addressed postcard or envelope. We will consider all comments and material received during the comment period and may change the rule based on your comments.

2. Viewing Comments and Documents

To view comments, as well as documents mentioned in this preamble as being available in the docket, go to *http://www.regulations.gov*, type the docket number (USCG–2013–0326) in the ''SEARCH'' box and click ''SEARCH.'' Click on ''OPEN DOCKET FOLDER'' on the line associated with this rulemaking. You may also visit the Docket Management Facility in Room W12–140 on the ground floor of the Department of Transportation West Building, 1200 New Jersey Avenue SE., Washington, DC 20590, between 9 a.m. and 5 p.m., Monday through Friday, except Federal holidays.

3. Privacy Act

Anyone can search the electronic form of comments received into any of our dockets by the name of the individual submitting the comment (or signing the comment, if submitted on behalf of an association, business, labor union, etc.). You may review a Privacy Act notice regarding our public dockets in the January 17, 2008 issue of the **Federal Register** (73 FR 3316).

4. Public Meeting

We do not now plan to hold a public meeting, but you may submit a request for one using one of the four methods specified under **ADDRESSES**. Please explain why you believe a public meeting would be beneficial. If we determine that one would aid this rulemaking, we will hold one at a time and place announced by a later notice in the **Federal Register**.

B. Basis and Purpose

Bartolotta Catering Company has informed the Coast Guard of 4 fireworks displays planned for 2013. These displays are scheduled for July 10;

August 3 and 22; and October 5. Each display is expected to involve fireworks no larger than 4″ in diameter and will be fired from the same location on Discovery World Pier. The Captain of the Port, Lake Michigan, has determined that the likelihood of transiting watercraft during the fireworks displays presents a significant risk of serious injuries or fatalities. The safety risks associated with these displays include falling debris, accidental detonations, and the spread of fire among spectator vessels.

C. Discussion of Proposed Rule

The Captain of the Port, Lake Michigan, has determined that a safety zone is necessary to mitigate the aforementioned safety risks. Thus, this proposed rule establishes a safety zone that encompasses all waters of Milwaukee Harbor, including Lakeshore inlet and Discovery World Marina, within the arc of a circle with a 300-foot radius from the fireworks launch site located in approximate position 43°02′10.7″ N, 087°53′37.5″ W (NAD 83).

This proposed rule will be effective from July 10, 2013, until October 5, 2013. This safety zone will be enforced from 9 p.m. until 11 p.m. on July 10; August 3 and 22; and October 5, 2013.

The Captain of the Port Lake Michigan will use all appropriate means to notify the public when the safety zone in this proposal will be enforced. Consistent with 33 CFR 165.7(a), such means of notice may include, among other things, publication in the **Federal Register**, Broadcast Notice to Mariners, Local Notice to Mariners, or upon request, by facsimile (fax).

Entry into, transiting, or anchoring within the proposed safety zone during the period of enforcement is prohibited unless authorized by the Captain of the Port, Lake Michigan, or his designated representative. The Captain of the Port, Lake Michigan, or his designated representative may be contacted via VHF Channel 16.

D. Regulatory Analyses

We developed this proposed rule after considering numerous statutes and executive orders related to rulemaking. Below we summarize our analyses based on these statutes or executive orders.

1. Regulatory Planning and Review

This proposed rule is not a significant regulatory action under section 3(f) of Executive Order 12866, Regulatory Planning and Review, and does not require an assessment of potential costs and benefits under section 6(a)(3) of that Order. The Office of Management and Budget has not reviewed it under that Order. It is not ''significant'' under the regulatory policies and procedures of the Department of Homeland Security (DHS). We conclude that this proposed rule is not a significant regulatory action because we anticipate that it will have minimal impact on the economy, will not interfere with other agencies, will not adversely alter the budget of any grant or loan recipients, and will not raise any novel legal or policy issues. The safety zone established by this proposed rule will be relatively small and enforced for two hours on a given day. Also, the safety zone is designed to minimize its impact on navigable waters. Furthermore, the safety zone has been designed to allow vessels to transit unrestricted to portions of the waterways not affected by the safety zones. Thus, restrictions on vessel movements within the affected area is expected to be minimal. Under certain conditions, moreover, vessels may still transit through the safety zone when permitted by the Captain of the Port. On the whole, the Coast Guard expects insignificant adverse impact to mariners from the activation of this safety zone.

2. Impact on Small Entities

The Regulatory Flexibility Act of 1980 (RFA), 5 U.S.C. 601–612, as amended, requires federal agencies to consider the potential impact of regulations on small entities during rulemaking. The term ''small entities'' comprises small businesses, not-for-profit organizations that are independently owned and operated and are not dominant in their fields, and governmental jurisdictions with populations of less than 50,000. The Coast Guard certifies under 5 U.S.C. 605(b) that this proposed rule will not have a significant economic impact on a substantial number of small entities.

This proposed rule would affect the following entities, some of which might be small entities: the owners and operators of vessels intending to transit or anchor in the vicinity of the Discovery World Marina or Lakeshore inlet during the period that this proposed zone is enforced.

This proposed safety zone will not have a significant economic impact on a substantial number of small entities for all of the reasons discussed in the above Regulatory Planning and Review section. If you think that your business, organization, or governmental jurisdiction qualifies as a small entity and that this proposed rule would have a significant economic impact on it, please submit a comment (see **ADDRESSES**) explaining why you think it qualifies and how and to what degree this rule would economically affect it.

3. Assistance for Small Entities

Under section 213(a) of the Small Business Regulatory Enforcement Fairness Act of 1996 (Pub. L. 104–121), we want to assist small entities in understanding this proposed rule. If the rule would affect your small business, organization, or governmental jurisdiction and you have questions concerning its provisions or options for compliance, please contact the person listed in the **FOR FURTHER INFORMATION CONTACT**, above. The Coast Guard will not retaliate against small entities that question or complain about this proposed rule or any policy or action of the Coast Guard.

4. Collection of Information

This proposed rule would call for no new collection of information under the Paperwork Reduction Act of 1995 (44 U.S.C. 3501–3520).

5. Federalism

A rule has implications for federalism under Executive Order 13132, Federalism, if it has a substantial direct effect on the States, on the relationship between the national government and the States, or on the distribution of power and responsibilities among the various levels of government. We have analyzed this proposed rule under that Order and determined that this rule does not have implications for federalism.

6. Protest Activities

The Coast Guard respects the First Amendment rights of protesters. Protesters are asked to contact the person listed in the **FOR FURTHER INFORMATION CONTACT** section to coordinate protest activities so that your message can be received without jeopardizing the safety or security of people, places or vessels.

7. Unfunded Mandates Reform Act

The Unfunded Mandates Reform Act of 1995 (2 U.S.C. 1531–1538) requires Federal agencies to assess the effects of their discretionary regulatory actions. In particular, the Act addresses actions that may result in the expenditure by a State, local, or tribal government, in the aggregate, or by the private sector of $100,000,000 (adjusted for inflation) or more in any one year. Though this proposed rule would not result in such an expenditure, we do discuss the effects of this proposed rule elsewhere in this preamble.

8. Taking of Private Property

This proposed rule would not affect a taking of private property or otherwise have taking implications under Executive Order 12630, Governmental Actions and Interference with Constitutionally Protected Property Rights.

9. Civil Justice Reform

This proposed rule meets applicable standards in sections 3(a) and 3(b)(2) of Executive Order 12988, Civil Justice Reform, to minimize litigation, eliminate ambiguity, and reduce burden.

10. Protection of Children From Environmental Health Risks

We have analyzed this proposed rule under Executive Order 13045, Protection of Children from Environmental Health Risks and Safety Risks. This proposed rule is not an economically significant rule and would not create an environmental risk to health or risk to safety that might disproportionately affect children.

11. Indian Tribal Governments

This proposed rule does not have tribal implications under Executive Order 13175, Consultation and Coordination with Indian Tribal Governments, because it does not have a substantial direct effect on one or more Indian tribes, on the relationship between the Federal Government and Indian tribes, or on the distribution of power and responsibilities between the Federal Government and Indian tribes.

12. Energy Effects

This proposed rule is not a ''significant energy action'' under Executive Order 13211, Actions Concerning Regulations That Significantly Affect Energy Supply, Distribution, or Use.

13. Technical Standards

This proposed rule does not use technical standards. Therefore, we did not consider the use of voluntary consensus standards.

14. Environment

We have analyzed this proposed rule under Department of Homeland Security Management Directive 023–01 and Commandant Instruction M16475.lD, which guide the Coast Guard in complying with the National Environmental Policy Act of 1969 (NEPA)(42 U.S.C. 4321–4370f), and have made a preliminary determination that this action is one of a category of actions which do not individually or cumulatively have a significant effect on the human environment. This proposed rule involves the establishment of a safety zone and thus, is categorically excluded under paragraph (34)(g) of the Instruction. A preliminary environmental analysis checklist supporting this determination is available in the docket where indicated under **ADDRESSES**. We seek any comments or information that may lead to the discovery of a significant environmental impact from this proposed rule.

List of Subjects in 33 CFR Part 165

Harbors, Marine Safety, Navigation (water), Reporting and record keeping requirements, Security measures, Waterways.

For the reasons discussed in the preamble, the Coast Guard proposes to amend 33 CFR Part 165 as follows:

PART 165— REGULATED NAVIGATION AREAS AND LIMITED ACCESS AREAS

■ 1. The authority citation for part 165 continues to read as follows:

Authority: 33 U.S.C. 1231; 46 U.S.C. Chapters 701, 3306, 3703; 50 U.S.C. 191, 195; 33 CFR 1.05–1, 6.04–1, 6.04–6, and 160.5; Pub. L. 107–295, 116 Stat. 2064; Department of Homeland Security Delegation No. 0170.1.

■ 2. Add § 165.T09–0326 to read as follows:

§ 165.T09–0326 Safety Zone; Discovery World Fireworks, Milwaukee Harbor, Milwaukee, Wisconsin.

(a) *Location.* All waters of Milwaukee Harbor, including Lakeshore inlet and Discovery World Marina, within the arc of a circle with a 300-foot radius from the fireworks launch site located in approximate position 43°02′10.7″ N, 087°53′37.5″ W (NAD 83).

(b) *Effective Period.* This safety zone will be effective from July 10, 2013, until October 5, 2013. This safety zone will be enforced from 9 p.m. until 11 p.m. on July 10; August 3 and 22; and October 5, 2013.

(c) *Definitions.* The following definitions apply to this section:

(1) ''On-scene Representative'' means any Coast Guard Commissioned, warrant, or petty officer designated by the Captain of the Port, Lake Michigan to monitor a safety zone, permit entry into the zone, give legally enforceable orders to persons or vessels within the zones, and take other actions authorized by the Captain of the Port.

(2) ''Public vessel'' means vessels owned, chartered, or operated by the United States, or by a State or political subdivision thereof.

(d) *Regulations.*

(1) In accordance with the general regulations in § 165.23 of this part, entry into, transiting, or anchoring within this safety zone is prohibited unless authorized by the Captain of the Port, Lake Michigan, or his designated representative.

(2) This safety zone is closed to all vessel traffic except as may be permitted by the Captain of the Port, Lake Michigan, or his designated representative. All persons and vessels must comply with the instructions of the Coast Guard Captain of the Port or his designated representative. Upon being hailed by the U.S. Coast Guard by siren, radio, flashing light or other means, the operator of a vessel shall proceed as directed.

(3) All vessels must obtain permission from the Captain of the Port or his designated representative to enter, move within, or exit the safety zone established in this section when this safety zone is enforced. Vessels and persons granted permission to enter the safety zone must obey all lawful orders or directions of the Captain of the Port or a designated representative. While within a safety zone, all vessels must operate at the minimum speed necessary to maintain a safe course.

(e) *Exemption.* Public vessels, as defined in paragraph (c) of this section, are exempt from the requirements in this section.

(f) *Waiver.* For any vessel, the Captain of the Port Lake Michigan or his designated representative may waive any of the requirements of this section, upon finding that operational conditions or other circumstances are such that application of this section is unnecessary or impractical for the purposes of public or environmental safety.

(g) *Notification.* The Captain of the Port Lake Michigan will notify the public that the safety zone in this section is or will be enforced by all appropriate means to the affected segments of the public including publication in the **Federal Register** as practicable, in accordance with 33 CFR 165.7(a). Such means of notification may also include, but are not limited to Broadcast Notice to Mariners or Local Notice to Mariners.

Dated: May 6, 2013.

M.W. Sibley,

Captain, U.S. Coast Guard, Captain of the Port, Lake Michigan.

[FR Doc. 2013–11752 Filed 5–16–13; 8:45 am]

BILLING CODE 9110–04–P

DEPARTMENT OF HOMELAND SECURITY

Coast Guard

33 CFR Part 165

[Docket No. USCG–2013–0021]

RIN 1625–AA00

Safety Zones; Hawaiian Island Commercial Harbors, HI

AGENCY: Coast Guard, DHS.

ACTION: Notice of Proposed Rulemaking.

SUMMARY: The Coast Guard proposes to establish permanent safety zones in Hawaii's nine commercial harbors (Nawiliwili and Port Allen, Kauai; Barber's Point and Honolulu Harbor, Oahu; Kaunakakai, Molokai; Kaumalapau, Lanai; Kahalui, Maui and Kawaihae and Hilo on the Island of Hawaii). The purpose of these safety zones is to expedite the evacuation of the harbors in the event a tsunami warning is issued for the main Hawaiian Islands.

DATES: Comments and related material must be received by the Coast Guard on or before June 17, 2013.

ADDRESSES: You may submit comments identified by docket number using any one of the following methods:

(1) *Federal eRulemaking Portal: http://www.regulations.gov.*

(2) *Fax:* 202–493–2251.

(3) *Mail or Delivery:* Docket Management Facility (M–30), U.S. Department of Transportation, West Building Ground Floor, Room W12–140, 1200 New Jersey Avenue SE., Washington, DC 20590–0001. Deliveries accepted between 9 a.m. and 5 p.m., Monday through Friday, except federal holidays. The telephone number is 202–366–9329.

See the ''Public Participation and Request for Comments'' portion of the **SUPPLEMENTARY INFORMATION** section below for further instructions on submitting comments. To avoid duplication, please use only one of these three methods.

FOR FURTHER INFORMATION CONTACT: If you have questions on this rule, call or email Lieutenant Commander Scott O. Whaley, Waterways Management Division, U.S. Coast Guard Sector Honolulu; telephone (808) 522–8264 (ext. 352), email *Scott.O.Whaley@uscg.mil.* If you have questions on viewing or submitting material to the docket, call Barbara Hairston, Program Manager, Docket Operations, telephone (202) 366–9826.

SUPPLEMENTARY INFORMATION:

Table of Acronyms

DHS Department of Homeland Security
FR Federal Register
NPRM Notice of Proposed Rulemaking

A. Public Participation and Request for Comments

We encourage you to participate in this rulemaking by submitting comments and related materials. All comments received will be posted without change to *http://www.regulations.gov* and will include any personal information you have provided.

1. Submitting Comments

If you submit a comment, please include the docket number for this rulemaking, indicate the specific section of this document to which each comment applies, and provide a reason for each suggestion or recommendation. You may submit your comments and material online at *http://www.regulations.gov*, or by fax, mail, or hand delivery, but please use only one of these means. If you submit a comment online, it will be considered received by the Coast Guard when you successfully transmit the comment. If you fax, hand deliver, or mail your comment, it will be considered as having been received by the Coast Guard when it is received at the Docket Management Facility. We recommend that you include your name and a mailing address, an email address, or a telephone number in the body of your document so that we can contact you if we have questions regarding your submission.

To submit your comment online, go to *http://www.regulations.gov*, type the docket number USCG–2013–0021 in the ''SEARCH'' box and click ''SEARCH.'' Click on ''Submit a Comment'' on the line associated with this rulemaking.

If you submit your comments by mail or hand delivery, submit them in an unbound format, no larger than 8½ by 11 inches, suitable for copying and electronic filing. If you submit comments by mail and would like to know that they reached the Facility, please enclose a stamped, self-addressed postcard or envelope. We will consider all comments and material received during the comment period and may change the rule based on your comments.

2. Viewing Comments and Documents

To view comments, as well as documents mentioned in this preamble as being available in the docket, go to *http://www.regulations.gov*, type the docket number USCG–2013–0021 in the ''SEARCH'' box and click ''SEARCH.'' Click on Open Docket Folder on the line associated with this rulemaking. You may also visit the Docket Management Facility in Room W12–140 on the ground floor of the Department of Transportation West Building, 1200 New Jersey Avenue SE., Washington, DC 20590, between 9 a.m. and 5 p.m., Monday through Friday, except Federal holidays.

3. Privacy Act

Anyone can search the electronic form of comments received into any of our dockets by the name of the individual submitting the comment (or signing the comment, if submitted on behalf of an association, business, labor union, etc.). You may review a Privacy Act notice regarding our public dockets in the January 17, 2008, issue of the **Federal Register** (73 FR 3316).

4. Public Meeting

We do not now plan to hold a public meeting. But you may submit a request for one, using one of the methods specified under **ADDRESSES**. Please explain why you believe a public meeting would be beneficial. If we determine that one would aid this rulemaking, we will hold one at a time and place announced by a later notice in the **Federal Register**.

B. Basis and Purpose

Tsunamis can occur at any time. There is no tsunami season. The destructive potential of a tsunami can take lives, cause millions of dollars in property damage, and alter sensitive ecologies. The tsunami generated by the 9.0 earthquake that struck Japan in 2011 reached Hawaiian shores in approximately seven hours. More recently, in 2012 a tsunami was generated by a 7.7 earthquake originating from the Queen Charlotte Islands of British Columbia. The surge created from this earthquake reached the Hawaiian shores in less than four hours. No time can be wasted in the evacuation of the harbors once a tsunami warning has been issued.

The purpose for this rule is to evacuate and close Hawaii's commercial harbors, collectively or individually, after a tsunami warning has been issued. It is crucial to minimize the number of vessels in Hawaii's commercial harbors to reduce the amount of vessel and port damage and potential harbor blockage that could occur in the event of a tsunami reaching the shores of the Hawaiian Islands. All Hawaiian Islands rely heavily on their commercial harbors for receiving goods and services. Dedicated on-island commercial salvage assets are limited so blockage of a

channel or harbor by a vessel that failed to evacuate could have devastating impacts on local residents for a significant period of time.

The Coast Guard has met with industry partners, commercial mariners, and recreational boaters in the creation of this rule. Vessels are much safer at sea beyond the 300 feet or 50 fathom curve than in port during a tsunami.

The statutory basis for this rulemaking is 33 U.S.C. 1231, which gives the Coast Guard, under a delegation from the Secretary of Homeland Security, regulatory authority to enforce the Ports and Waterways Safety Act.

C. Discussion of Proposed Rule

This rule will create safety zones encompassing each of Hawaii's commercial harbors. In the event a tsunami warning is issued, the Coast Guard will enforce these safety zones, closing those harbors within the anticipated impact area of the tsunami. When the safety zones are activated for enforcement, no vessels will be permitted to enter the closed harbors. Enforcement of these safety zones will also trigger an immediate evacuation of the closed harbors. The harbors will remain closed until the Coast Guard reopens the specific harbor(s) impacted. Once the threat has passed and harbors have been assessed as safe for reentry of commercial navigation, the safety zones will be deactivated allowing vessels to transit the harbors in accordance with already established regulations.

D. Regulatory Analyses

We developed this proposed rule after considering numerous statutes and executive orders related to rulemaking. Below we summarize our analyses based on a number of these statutes or executive orders.

1. Regulatory Planning and Review

This proposed rule is not a significant regulatory action under section 3(f) of Executive Order 12866, Regulatory Planning and Review, as supplemented by Executive Order 13563, Improving Regulation and Regulatory Review, and does not require an assessment of potential costs and benefits under section 6(a)(3) of Executive Order 12866 or under section 1 of Executive Order 13563. The Office of Management and Budget has not reviewed it under those Orders. This safety zone will only be activated for enforcement in the event the state of Hawaii is issued a tsunami warning for the safety of lives and property.

2. Impact on Small Entities

Under the Regulatory Flexibility Act (5 U.S.C. 601–612), we have considered the impact of this proposed rule on small entities. The Coast Guard certifies under 5 U.S.C. 605(b) that this proposed rule will not have a significant economic impact on a substantial number of small entities. This safety zone would be activated, and thus subject to enforcement only when a tsunami warning is issued for the Main Hawaiian Islands. Once the threat has passed and harbors have been assessed as safe for reentry of commercial navigation, the safety zone will be deactivated allowing vessels to transit the harbors in accordance with already established regulations.

If you think that your business, organization, or governmental jurisdiction qualifies as a small entity and that this rule would have a significant economic impact on it, please submit a comment (see **ADDRESSES**) explaining why you think it qualifies and how and to what degree this rule would economically affect it.

3. Assistance for Small Entities

Under section 213(a) of the Small Business Regulatory Enforcement Fairness Act of 1996 (Pub. L. 104–121), we want to assist small entities in understanding this proposed rule. If the rule would affect your small business, organization, or governmental jurisdiction and you have questions concerning its provisions or options for compliance, please contact the person listed in the **FOR FURTHER INFORMATION CONTACT**, above. The Coast Guard will not retaliate against small entities that question or complain about this proposed rule or any policy or action of the Coast Guard.

4. Collection of Information

This proposed rule will not call for a new collection of information under the Paperwork Reduction Act of 1995 (44 U.S.C. 3501–3520.).

5. Federalism

A rule has implications for federalism under Executive Order 13132, Federalism, if it has a substantial direct effect on the States, on the relationship between the national government and the States, or on the distribution of power and responsibilities among the various levels of government. We have analyzed this proposed rule under that Order and determined that this rule does not have implications for federalism.

6. Protest Activities

The Coast Guard respects the First Amendment rights of protesters. Protesters are asked to contact the person listed in the **FOR FURTHER INFORMATION CONTACT** section to coordinate protest activities so that your message can be received without jeopardizing the safety or security of people, places or vessels.

7. Unfunded Mandates Reform Act

The Unfunded Mandates Reform Act of 1995 (2 U.S.C. 1531–1538) requires Federal agencies to assess the effects of their discretionary regulatory actions. In particular, the Act addresses actions that may result in the expenditure by a State, local, or tribal government, in the aggregate, or by the private sector of $100,000,000 (adjusted for inflation) or more in any one year. Though this proposed rule would not result in such an expenditure, we do discuss the effects of this rule elsewhere in this preamble.

8. Taking of Private Property

This proposed rule would not cause a taking of private property or otherwise have taking implications under Executive Order 12630, Governmental Actions and Interference with Constitutionally Protected Property Rights.

9. Civil Justice Reform

This proposed rule meets applicable standards in sections 3(a) and 3(b)(2) of Executive Order 12988, Civil Justice Reform, to minimize litigation, eliminate ambiguity, and reduce burden.

10. Protection of Children From Environmental Health Risks

We have analyzed this proposed rule under Executive Order 13045, Protection of Children from Environmental Health Risks and Safety Risks. This rule is not an economically significant rule and would not create an environmental risk to health or risk to safety that might disproportionately affect children.

11. Indian Tribal Governments

This proposed rule does not have tribal implications under Executive Order 13175, Consultation and Coordination with Indian Tribal Governments, because it would not have a substantial direct effect on one or more Indian tribes, on the relationship between the Federal Government and Indian tribes, or on the distribution of power and responsibilities between the Federal Government and Indian tribes.

12. Energy Effects

This proposed rule is not a ''significant energy action'' under Executive Order 13211, Actions Concerning Regulations That Significantly Affect Energy Supply, Distribution, or Use.

13. Technical Standards

This proposed rule does not use technical standards. Therefore, we did not consider the use of voluntary consensus standards.

14. Environment

We have analyzed this proposed rule under Department of Homeland Security Management Directive 023–01 and Commandant Instruction M16475.lD, which guide the Coast Guard in complying with the National Environmental Policy Act of 1969 (NEPA) (42 U.S.C. 4321–4370f), and have made a preliminary determination that this action is one of a category of actions that do not individually or cumulatively have a significant effect on the human environment. This rule will evacuate commercial harbors which anticipate tsunami impact. This rule is categorically excluded, under figure 2–1, paragraph (34)(g), of the Instruction. We seek any comments or information that may lead to the discovery of a significant environmental impact from this proposed rule.

List of Subjects in 33 CFR Part 165

Harbors, Marine safety, Navigation (water), Reporting and recordkeeping requirements, Security measures, Waterways.

For the reasons discussed in the preamble, the Coast Guard proposes to amend 33 CFR part 165 as follows:

PART 165—REGULATED NAVIGATION AREAS AND LIMITED ACCESS AREAS

■ 1. The authority citation for part 165 continues to read as follows:

Authority: 33 U.S.C. 1226, 1231; 46 U.S.C. Chapter 701; 50 U.S.C. 191, 195; 33 CFR 1.05–1, 6.04–1, 6.04–6, and 160.5; Pub. L. 107–295, 116 Stat. 2064; Department of Homeland Security Delegation No. 0170.1.

■ 2. Add § 165. 14–1414 to read as follows:

§ 165. 14–1414 Safety Zones; Hawaiian Islands Commercial Harbors; HI.

(a) *Location.* The following areas are safety zones: The commercial harbors of Nawiliwili and Port Allen, Kauai; Barber's Point and Honolulu Harbor, Oahu; Kaunakakai, Molokai; Kaumalapau, Lanai; Kahalui, Maui and Kawaihae and Hilo on the Island of Hawaii. The activation of these safety zones may include any combination of these harbors, or all of these harbors, dependent upon details in the tsunami warning. This safety zone extends from the surface of the water to the ocean floor.

(b) *Regulations.* When the safety zone is activated and, therefore, subject to enforcement, no person or vessel may enter or remain in the safety zone except for support vessels, support personnel, and other vessels authorized by the Captain of the Port, Sector Honolulu (COTP), or a designated representative of the COTP. All other applicable regulations in 33 CFR 165 remain in effect and subject to enforcement. You may contact the Coast Guard on VHF Channel 16 (156.800 MHz) or at telephone number 808–842–2600 to obtain clarification on safety zone transits and locations. Coast Guard patrol boats will be enforcing the safety zone and providing on-scene direction.

(c) *Enforcement period.* Paragraph (b) of this section will be enforced when a tsunami warning has been issued for the Hawaiian Islands. The COTP will notify the public of any enforcement, suspension of enforcement, or termination of enforcement through the following appropriate means to ensure the widest publicity: broadcast notice to mariners, notices of enforcement, press releases and Homeport. Following the passage of a tsunami and harbor assessments, de-activation of these safety zones will be conducted through radio broadcast by the U.S. Coast Guard.

(d) *Penalties.* Vessels or persons violating this rule would be subject to the penalties set forth in 33 U.S.C. 1232 and 50 U.S.C. 192.

Dated: April 6, 2013.

J.M. Nunan,

Captain, U.S. Coast Guard, Captain of the Port Honolulu.

[FR Doc. 2013–11753 Filed 5–16–13; 8:45 am]

BILLING CODE 9110–04–P

DEPARTMENT OF HOMELAND SECURITY

Coast Guard

33 CFR Part 165

[Docket No. USCG–2013–0330]

RIN 1625–AA00

Safety Zone; Outer Banks Bluegrass Festival; Shallowbag Bay, Manteo, NC

AGENCY: Coast Guard, DHS.

ACTION: Notice of Proposed Rulemaking.

SUMMARY: The Coast Guard is proposing the establishment of a temporary safety zone on Shallowbag Bay, Manteo, NC on October 4, 2013, for a fireworks display as part of the Outer Banks Bluegrass Festival. This action is necessary to protect the life and property of the maritime public from the hazards posed by fireworks displays. This safety zone is intended to restrict vessels from a portion of Shallowbag Bay River during the Outer Banks Bluegrass Festival Fireworks display.

DATES: Comments and related material must be received by the Coast Guard on or before June 17, 2013.

ADDRESSES: You may submit comments identified by docket number using any one of the following methods:

(1) *Federal eRulemaking Portal: http://www.regulations.gov.*

(2) *Fax:* 202–493–2251.

(3) *Mail or Delivery:* Docket Management Facility (M–30), U.S. Department of Transportation, West Building Ground Floor, Room W12–140, 1200 New Jersey Avenue SE., Washington, DC 20590–0001. Deliveries accepted between 9 a.m. and 5 p.m., Monday through Friday, except federal holidays. The telephone number is 202–366–9329.

See the ''Public Participation and Request for Comments'' portion of the **SUPPLEMENTARY INFORMATION** section below for further instructions on submitting comments. To avoid duplication, please use only one of these three methods.

FOR FURTHER INFORMATION CONTACT: If you have questions on this rule, call or email CWO3 Joseph M. Edge, Sector North Carolina Waterways Management, Coast Guard; telephone (252) 247–4525, email *Joseph.M.Edge@uscg.mil.* If you have questions on viewing or submitting material to the docket, call Barbara Hairston, Program Manager, Docket Operations, telephone (202) 366–9826.

SUPPLEMENTARY INFORMATION:

Table of Acronyms

DHS Department of Homeland Security
FR Federal Register
NPRM Notice of Proposed Rulemaking

A. Public Participation and Request for Comments

We encourage you to participate in this rulemaking by submitting comments and related materials. All comments received will be posted without change to *http://www.regulations.gov* and will include any personal information you have provided.

1. Submitting Comments

If you submit a comment, please include the docket number for this rulemaking, indicate the specific section

of this document to which each comment applies, and provide a reason for each suggestion or recommendation. You may submit your comments and material online at *http://www.regulations.gov,* or by fax, mail, or hand delivery, but please use only one of these means. If you submit a comment online, it will be considered received by the Coast Guard when you successfully transmit the comment. If you fax, hand deliver, or mail your comment, it will be considered as having been received by the Coast Guard when it is received at the Docket Management Facility. We recommend that you include your name and a mailing address, an email address, or a telephone number in the body of your document so that we can contact you if we have questions regarding your submission.

To submit your comment online, go to *http://www.regulations.gov,* type the docket number [USCG–2013–0330] in the ''SEARCH'' box and click ''SEARCH.'' Click on ''Submit a Comment'' on the line associated with this rulemaking.

If you submit your comments by mail or hand delivery, submit them in an unbound format, no larger than 8½ by 11 inches, suitable for copying and electronic filing. If you submit comments by mail and would like to know that they reached the Facility, please enclose a stamped, self-addressed postcard or envelope. We will consider all comments and material received during the comment period and may change the rule based on your comments.

2. Viewing Comments and Documents

To view comments, as well as documents mentioned in this preamble as being available in the docket, go to *http://www.regulations.gov,* type the docket number (USCG–2013–0330) in the ''SEARCH'' box and click ''SEARCH.'' Click on Open Docket Folder on the line associated with this rulemaking. You may also visit the Docket Management Facility in Room W12–140 on the ground floor of the Department of Transportation West Building, 1200 New Jersey Avenue SE., Washington, DC 20590, between 9 a.m. and 5 p.m., Monday through Friday, except Federal holidays.

3. Privacy Act

Anyone can search the electronic form of comments received into any of our dockets by the name of the individual submitting the comment (or signing the comment, if submitted on behalf of an association, business, labor union, etc.). You may review a Privacy Act notice regarding our public dockets in the January 17, 2008, issue of the **Federal Register** (73 FR 3316).

4. Public Meeting

We do not now plan to hold a public meeting. But you may submit a request for one, using one of the methods specified under **ADDRESSES**. Please explain why you believe a public meeting would be beneficial. If we determine that one would aid this rulemaking, we will hold one at a time and place announced by a later notice in the **Federal Register**.

B. Basis and Purpose

On October 4, 2013, fireworks will be launched from a barge located in Shallowbag Bay in Manteo, North Carolina as part of the Outer Banks Bluegrass Festival. The temporary safety zone created by this rule is necessary to ensure the safety of vessels and spectators from hazards associated with the fireworks display. Such hazards include obstructions to the waterway that may cause death, serious bodily harm, or property damage, as well as the accidental discharge of fireworks, dangerous projectiles, and falling hot embers or other debris. Establishing a safety zone to control vessel movement around the location of the launch area will help ensure the safety of persons and property in the vicinity of this event and help minimize the associated risks.

C. Discussion of Proposed Rule

A temporary safety zone is necessary to ensure the safety of spectators and vessels during the setup, loading, and launching of the Outer Banks Bluegrass Festival Fireworks Display. The fireworks display will occur for approximately 15 minutes from 9 p.m. to 9:15 p.m. on October 4, 2013. However, the Safety Zone will be effective and enforced from 8 p.m. until 10 p.m. in order to ensure safety during the setup, loading and removal of the display equipment.

The safety zone will encompass all waters on Shallowbag Bay within a 200 yard radius of a barge anchor in position 35°54′31″ N, longitude 075°39′42″ W from 8 p.m. until 10 p.m. on October 4, 2013. All geographic coordinates are North American Datum 1983 (NAD 83). The effect of this temporary safety zone will be to restrict navigation in the regulated area during the fireworks display.

All persons and vessels shall comply with the instructions of the Coast Guard Captain of the Port or the designated on scene patrol personnel. Entry into, transiting, or anchoring within the safety zone is prohibited unless authorized by the Captain of the Port Sector North Carolina or his designated representative. The Captain of the Port or his designated representative may be contacted via VHF Channel 16. Notification of the temporary safety zone will be provided to the public via marine information broadcasts.

D. Regulatory Analyses

We developed this proposed rule after considering numerous statutes and executive orders related to rulemaking. Below we summarize our analyses based on a number of these statutes or executive orders.

1. Regulatory Planning and Review

This proposed rule is not a significant regulatory action under section 3(f) of Executive Order 12866, Regulatory Planning and Review, as supplemented by Executive Order 13563, Improving Regulation and Regulatory Review, and does not require an assessment of potential costs and benefits under section 6(a)(3) of Executive Order 12866 or under section 1 of Executive Order 13563. The Office of Management and Budget has not reviewed it under those Orders. Although this regulation will restrict access to the area, the effect of this rule will not be significant because: (i) The safety zone will only be in effect from 8 p.m. to 10 p.m. on October 4, 2013, (ii) the Coast Guard will give advance notification via maritime advisories so mariners can adjust their plans accordingly, and (iii) although the safety zone will apply to the section of Shallowbag Bay, vessel traffic will be able to transit safely around the safety zone.

2. Impact on Small Entities

The Regulatory Flexibility Act of 1980 (RFA), 5 U.S.C. 601–612, as amended, requires federal agencies to consider the potential impact of regulations on small entities during rulemaking. The term ''small entities'' comprises small businesses, not-for-profit organizations that are independently owned and operated and are not dominant in their fields, and governmental jurisdictions with populations of less than 50,000. The Coast Guard certifies under 5 U.S.C. 605(b) that this proposed rule will not have a significant economic impact on a substantial number of small entities.

This rule will affect the following entities, some of which may be small entities: The owners or operators of vessels intending to transit through or anchor in the specified portion of Shallowbag Bay on October 4, 2013.

This safety zone will not have a significant economic impact on a substantial number of small entities for

the following reasons. This rule will only be in effect for two hours, from 8 p.m. to 10 p.m. Although the safety zone will apply to a section of Shallowbag Bay, vessel traffic will be able to transit safely around the safety zone. Before the effective period, the Coast Guard will issue maritime advisories widely available to the users of the waterway.

If you think that your business, organization, or governmental jurisdiction qualifies as a small entity and that this rule would have a significant economic impact on it, please submit a comment (see **ADDRESSES**) explaining why you think it qualifies and how and to what degree this rule would economically affect it.

3. Assistance for Small Entities

Under section 213(a) of the Small Business Regulatory Enforcement Fairness Act of 1996 (Pub. L. 104–121), we want to assist small entities in understanding this proposed rule. If the rule would affect your small business, organization, or governmental jurisdiction and you have questions concerning its provisions or options for compliance, please contact the person listed in the **FOR FURTHER INFORMATION CONTACT**, above. The Coast Guard will not retaliate against small entities that question or complain about this proposed rule or any policy or action of the Coast Guard.

4. Collection of Information

This proposed rule will not call for a new collection of information under the Paperwork Reduction Act of 1995 (44 U.S.C. 3501–3520.).

5. Federalism

A rule has implications for federalism under Executive Order 13132, Federalism, if it has a substantial direct effect on the States, on the relationship between the national government and the States, or on the distribution of power and responsibilities among the various levels of government. We have analyzed this proposed rule under that Order and determined that this rule does not have implications for federalism.

6. Protest Activities

The Coast Guard respects the First Amendment rights of protesters. Protesters are asked to contact the person listed in the **FOR FURTHER INFORMATION CONTACT** section to coordinate protest activities so that your message can be received without jeopardizing the safety or security of people, places or vessels.

7. Unfunded Mandates Reform Act

The Unfunded Mandates Reform Act of 1995 (2 U.S.C. 1531–1538) requires Federal agencies to assess the effects of their discretionary regulatory actions. In particular, the Act addresses actions that may result in the expenditure by a State, local, or tribal government, in the aggregate, or by the private sector of $100,000,000 (adjusted for inflation) or more in any one year. Though this proposed rule would not result in such an expenditure, we do discuss the effects of this rule elsewhere in this preamble.

8. Taking of Private Property

This proposed rule would not cause a taking of private property or otherwise have taking implications under Executive Order 12630, Governmental Actions and Interference with Constitutionally Protected Property Rights.

9. Civil Justice Reform

This proposed rule meets applicable standards in sections 3(a) and 3(b)(2) of Executive Order 12988, Civil Justice Reform, to minimize litigation, eliminate ambiguity, and reduce burden.

10. Protection of Children From Environmental Health Risks

We have analyzed this proposed rule under Executive Order 13045, Protection of Children from Environmental Health Risks and Safety Risks. This rule is not an economically significant rule and would not create an environmental risk to health or risk to safety that might disproportionately affect children.

11. Indian Tribal Governments

This proposed rule does not have tribal implications under Executive Order 13175, Consultation and Coordination with Indian Tribal Governments, because it would not have a substantial direct effect on one or more Indian tribes, on the relationship between the Federal Government and Indian tribes, or on the distribution of power and responsibilities between the Federal Government and Indian tribes.

12. Energy Effects

This proposed rule is not a ''significant energy action'' under Executive Order 13211, Actions Concerning Regulations That Significantly Affect Energy Supply, Distribution, or Use.

13. Technical Standards

This proposed rule does not use technical standards. Therefore, we did not consider the use of voluntary consensus standards.

14. Environment

We have analyzed this proposed rule under Department of Homeland Security Management Directive 023–01 and Commandant Instruction M16475.lD, which guide the Coast Guard in complying with the National Environmental Policy Act of 1969 (NEPA) (42 U.S.C. 4321–4370f), and have made a preliminary determination that this action is one of a category of actions that do not individually or cumulatively have a significant effect on the human environment. This proposed rule establishes a temporary safety zone to protect the public from fireworks fallout. This rule is categorically excluded from further review under paragraph 34(g) of Figure 2–1 of the Commandant Instruction. A preliminary environmental analysis checklist supporting this determination and a Categorical Exclusion Determination are available in the docket where indicated under **ADDRESSES**. We seek any comments or information that may lead to the discovery of a significant environmental impact from this proposed rule.

List of Subjects in 33 CFR Part 165

Harbors, Marine safety, Navigation (water), Reporting and recordkeeping requirements, Security measures, and Waterways.

For the reasons discussed in the preamble, the Coast Guard proposes to amend 33 CFR part 165 as follows:

PART 165— REGULATED NAVIGATION AREAS AND LIMITED ACCESS AREAS

■ 1. The authority citation for part 165 continues to read as follows:

Authority: 33 U.S.C. 1231; 46 U.S.C. Chapter 701, 3306, 3703; 50 U.S.C. 191, 195; 33 CFR 1.05–1, 6.04–1, 6.04–6, 160.5; Pub. L. 107–295, 116 Stat. 2064; Department of Homeland Security Delegation No. 0170.1.

■ 2. Add § *165.T05–0330* to read as follows:

§ 165.T05–0330 SAFETY ZONE, SHALLOWBAG BAY; MANTEO, NC

(a) Definitions. For the purposes of this section, Captain of the Port means the Commander, Sector North Carolina. *Representative* means any Coast Guard commissioned, warrant, or petty officer who has been authorized to act on the behalf of the Captain of the Port.

(b) Location. The following area is a safety zone: This safety zone will encompass all waters on Shallowbag Bay within a 200 yard radius of a barge

anchor in position 35°54′31″ N, longitude 075°39′42″ W. All geographic coordinates are North American Datum 1983 (NAD 83).

(c) Regulations. (1) The general regulations contained in § 165.23 of this part apply to the area described in paragraph (b) of this section.

(2) Persons or vessels requiring entry into or passage through any portion of the safety zone must first request authorization from the Captain of the Port, or a designated representative, unless the Captain of the Port previously announced via Marine Safety Radio Broadcast on VHF Marine Band Radio channel 22 (157.1 MHz) that this regulation will not be enforced in that portion of the safety zone. The Captain of the Port can be contacted at telephone number (910) 343–3882 or by radio on VHF Marine Band Radio, channels 13 and 16.

(d) Enforcement. The U.S. Coast Guard may be assisted in the patrol and enforcement of the zone by Federal, State, and local agencies.

(e) Enforcement period. This section will be enforced from 8 p.m. to 10 p.m. on October 4, 2013, unless cancelled earlier by the Captain of the Port.

Dated: May 7, 2013.

A. Popiel,

Captain, U.S. Coast Guard, Captain of the Port North Carolina.

[FR Doc. 2013–11748 Filed 5–16–13; 8:45 am]

BILLING CODE 9110–04–P

DEPARTMENT OF HOMELAND SECURITY

Coast Guard

33 CFR Part 165

[Docket No. USCG–2013–0301]

RIN 1625–AA00

Safety Zone; Coronado Fourth of July Fireworks, Glorietta Bay; Coronado, CA

AGENCY: Coast Guard, DHS.

ACTION: Notice of Proposed Rulemaking.

SUMMARY: The Coast Guard proposes a temporary safety zone for the Coronado Fourth of July Fireworks from 8:45 p.m. to 10 p.m. on July 4, 2013. This regulated area encompasses the navigable waters of Glorietta Bay in Coronado, CA in support of Coronado Fourth of July Fireworks display. This action is necessary to provide for the safety of the participants, crew, spectators, participating vessels, and other vessels and users of the waterway. Persons and vessels will be prohibited from entering into, transiting through, or anchoring within this safety zone unless authorized by the Captain of the Port, or his designated representative.

DATES: Comments and related material must be received by the Coast Guard on or before June 17, 2013.

Requests for public meetings must be received by the Coast Guard on or before May 31, 2013.

ADDRESSES: You may submit comments identified by docket number using any one of the following methods:

(1) *Federal eRulemaking Portal: http://www.regulations.gov.*

(2) *Fax:* 202–493–2251.

(3) *Mail or Delivery:* Docket Management Facility (M–30), U.S. Department of Transportation, West Building Ground Floor, Room W12–140, 1200 New Jersey Avenue SE., Washington, DC 20590–0001. Deliveries accepted between 9 a.m. and 5 p.m., Monday through Friday, except federal holidays. The telephone number is 202–366–9329. See the ''Public Participation and Request for Comments'' portion of the **SUPPLEMENTARY INFORMATION** section below for further instructions on submitting comments. To avoid duplication, please use only one of these three methods.

FOR FURTHER INFORMATION CONTACT: If you have questions on this rule, call or Lieutenant John Bannon, Chief of Waterways, Coast Guard; telephone 619–278–7261, email *John.E.Bannon@uscg.mil.* If you have questions on viewing or submitting material to the docket, call Barbara Hairston, Program Manager, Docket Operations, telephone (202) 366–9826.

SUPPLEMENTARY INFORMATION:

Table of Acronyms

DHS—Department of Homeland Security
FR—Federal Register
NPRM—Notice of Proposed Rulemaking

A. Public Participation and Request for Comments

We encourage you to participate in this rulemaking by submitting comments and related materials. All comments received will be posted without change to *http://www.regulations.gov* and will include any personal information you have provided.

1. Submitting Comments

If you submit a comment, please include the docket number for this rulemaking, indicate the specific section of this document to which each comment applies, and provide a reason for each suggestion or recommendation. You may submit your comments and material online at *http://www.regulations.gov,* or by fax, mail, or hand delivery, but please use only one of these means. If you submit a comment online, it will be considered received by the Coast Guard when you successfully transmit the comment. If you fax, hand deliver, or mail your comment, it will be considered as having been received by the Coast Guard when it is received at the Docket Management Facility. We recommend that you include your name and a mailing address, an email address, or a telephone number in the body of your document so that we can contact you if we have questions regarding your submission.

To submit your comment online, go to *http://www.regulations.gov,* type the docket number [USCG–2013–0301] in the ''SEARCH'' box and click ''SEARCH.'' Click on ''Submit a Comment'' on the line associated with this rulemaking.

If you submit your comments by mail or hand delivery, submit them in an unbound format, no larger than 8½ by 11 inches, suitable for copying and electronic filing. If you submit comments by mail and would like to know that they reached the Facility, please enclose a stamped, self-addressed postcard or envelope. We will consider all comments and material received during the comment period and may change the rule based on your comments.

2. Viewing Comments and Documents

To view comments, as well as documents mentioned in this preamble as being available in the docket, go to *http://www.regulations.gov,* type the docket number (USCG–2013–0301) in the ''SEARCH'' box and click ''SEARCH.'' Click on Open Docket Folder on the line associated with this rulemaking. You may also visit the Docket Management Facility in Room W12–140 on the ground floor of the Department of Transportation West Building, 1200 New Jersey Avenue SE., Washington, DC 20590, between 9 a.m. and 5 p.m., Monday through Friday, except Federal holidays.

3. Privacy Act

Anyone can search the electronic form of comments received into any of our dockets by the name of the individual submitting the comment (or signing the comment, if submitted on behalf of an association, business, labor union, etc.). You may review a Privacy Act notice regarding our public dockets in the January 17, 2008, issue of the **Federal Register** (73 FR 3316).

4. Public Meeting

We do not now plan to hold a public meeting. But you may submit a request for one, using one of the methods specified under **ADDRESSES**. Please explain why you believe a public meeting would be beneficial. If we determine that one would aid this rulemaking, we will hold one at a time and place announced by a later notice in the **Federal Register**.

B. Regulatory History and Information

The Coast Guard has previously established a permanent safety zone in the table to 33 CFR 165.1123 for this annual event. This proposal is to notify the public that the regulated area has been moved 100 yards northwest from the location noted in 33 CFR 165.1123. This change was made to help mitigate environmental concerns. Therefore, a temporary final rule will be published after the comment period of this NPRM. A permanent final rule and update to the 33 CFR 165.1123 table for this annual event is under review for proposed rulemaking.

C. Basis and Purpose

The Ports and Waterways Safety Act gives the Coast Guard authority to create and enforce safety zones. The Coast Guard proposes establishing a temporary safety zone on the navigable waters of Glorietta Bay in support of a fireworks show sponsored by the city of Coronado. The safety zone will include all navigable waters within 800 feet of the fireworks barge located in approximate position: 32°40′43.0″ N, 117°10′14.3″ W

The temporary safety zone is necessary to provide for the safety of the show's crew, spectators, and participants of the event, participating vessels, and other vessels and users of the waterway.

This safety zone is necessary to provide for the safety of the fireworks barge crew and participating safety vessels, recreational boating spectators, and other users of the waterway from hazards associated with fireworks. Fireworks launched in close proximity to watercraft pose a significant risk to public safety and property. Such displays draw large numbers of spectators on vessels. The combination of a large number of spectators, congested waterways, darkness punctuated by bright flashes of light and burning debris has the potential to result in serious injuries or fatalities.

The proposed safety zone will restrict vessels from operating within a portion of the navigable waters around the fireworks launch platforms during the enforcement period which will be immediately before, during, and immediately after the fireworks displays.

D. Discussion of Proposed Rule

The Coast Guard is proposing the establishment of a temporary safety zone for the Coronado Fourth of July Fireworks from 8:45 p.m. to 10 p.m. on July 4, 2013. This regulated area encompasses the navigable waters of Glorietta Bay in Coronado, CA in support of Coronado Fourth of July Fireworks display. This action is necessary to provide for the safety of the participants, crew, spectators, participating vessels, and other vessels and users of the waterway. Persons and vessels will be prohibited from entering into, transiting through, or anchoring within this safety zone unless authorized by the Captain of the Port, or his designated representative.

The safety zone will include all navigable waters within 800 feet of the fireworks barge located in approximate position: 32°40′43.0″ N, 117°10′14.3″ W.

Vessels will be able to transit the surrounding area and may be authorized to transit through the proposed safety zone with the permission of the Captain of the Port or the designated representative. Before activating the zones, the Coast Guard will notify mariners by appropriate means including but not limited to Local Notice to Mariners and Broadcast Notice to Mariners.

E. Regulatory Analyses

We developed this proposed rule after considering numerous statutes and executive orders related to rulemaking. Below we summarize our analyses based on a number of these statutes or executive orders.

1. Regulatory Planning and Review

This proposed rule is not a significant regulatory action under section 3(f) of Executive Order 12866, Regulatory Planning and Review, as supplemented by Executive Order 13563, Improving Regulation and Regulatory Review, and does not require an assessment of potential costs and benefits under section 6(a)(3) of Executive Order 12866 or under section 1 of Executive Order 13563. The Office of Management and Budget has not reviewed it under those Orders. This determination is based on the small size, and limited duration of the safety zone.

2. Impact on Small Entities

The Regulatory Flexibility Act of 1980 (RFA), 5 U.S.C. 601–612, as amended, requires federal agencies to consider the potential impact of regulations on small entities during rulemaking. The term ''small entities'' comprises small businesses, not-for-profit organizations that are independently owned and operated and are not dominant in their fields, and governmental jurisdictions with populations of less than 50,000. The Coast Guard certifies under 5 U.S.C. 605(b) that this proposed rule will not have a significant economic impact on a substantial number of small entities.

(1) This proposed rule will affect the following entities, some of which may be small entities: the owners or operators of vessels intending to transit or anchor in specified portions of Glorietta Bay from 8:45 p.m. to 10:00 p.m. on July 4, 2013.

(2) This safety zone will not have a significant economic impact on a substantial number of small entities for the following reasons: The safety zone will only be in effect for one hour, late in the evening when vessel traffic is low.

If you think that your business, organization, or governmental jurisdiction qualifies as a small entity and that this rule would have a significant economic impact on it, please submit a comment (see **ADDRESSES**) explaining why you think it qualifies and how and to what degree this rule would economically affect it.

3. Assistance for Small Entities

Under section 213(a) of the Small Business Regulatory Enforcement Fairness Act of 1996 (Pub. L. 104–121), we want to assist small entities in understanding this proposed rule. If the rule would affect your small business, organization, or governmental jurisdiction and you have questions concerning its provisions or options for compliance, please contact the person listed in the **FOR FURTHER INFORMATION CONTACT**, above. The Coast Guard will not retaliate against small entities that question or complain about this proposed rule or any policy or action of the Coast Guard.

4. Collection of Information

This proposed rule will not call for a new collection of information under the Paperwork Reduction Act of 1995 (44 U.S.C. 3501–3520.).

5. Federalism

A rule has implications for federalism under Executive Order 13132, Federalism, if it has a substantial direct effect on the States, on the relationship between the national government and the States, or on the distribution of power and responsibilities among the various levels of government. We have

analyzed this proposed rule under that Order and determined that this rule does not have implications for federalism.

6. Protest Activities

The Coast Guard respects the First Amendment rights of protesters. Protesters are asked to contact the person listed in the **FOR FURTHER INFORMATION CONTACT** section to coordinate protest activities so that your message can be received without jeopardizing the safety or security of people, places or vessels.

7. Unfunded Mandates Reform Act

The Unfunded Mandates Reform Act of 1995 (2 U.S.C. 1531–1538) requires Federal agencies to assess the effects of their discretionary regulatory actions. In particular, the Act addresses actions that may result in the expenditure by a State, local, or tribal government, in the aggregate, or by the private sector of $100,000,000 (adjusted for inflation) or more in any one year. Though this proposed rule would not result in such an expenditure, we do discuss the effects of this rule elsewhere in this preamble.

8. Taking of Private Property

This proposed rule would not cause a taking of private property or otherwise have taking implications under Executive Order 12630, Governmental Actions and Interference with Constitutionally Protected Property Rights.

9. Civil Justice Reform

This proposed rule meets applicable standards in sections 3(a) and 3(b)(2) of Executive Order 12988, Civil Justice Reform, to minimize litigation, eliminate ambiguity, and reduce burden.

10. Protection of Children From Environmental Health Risks

We have analyzed this proposed rule under Executive Order 13045, Protection of Children from Environmental Health Risks and Safety Risks. This rule is not an economically significant rule and would not create an environmental risk to health or risk to safety that might disproportionately affect children.

11. Indian Tribal Governments

This proposed rule does not have tribal implications under Executive Order 13175, Consultation and Coordination with Indian Tribal Governments, because it would not have a substantial direct effect on one or more Indian tribes, on the relationship between the Federal Government and Indian tribes, or on the distribution of power and responsibilities between the Federal Government and Indian tribes.

12. Energy Effects

This proposed rule is not a ''significant energy action'' under Executive Order 13211, Actions Concerning Regulations That Significantly Affect Energy Supply, Distribution, or Use.

13. Technical Standards

This proposed rule does not use technical standards. Therefore, we did not consider the use of voluntary consensus standards.

14. Environment

We have analyzed this proposed rule under Department of Homeland Security Management Directive 023–01 and Commandant Instruction M16475.lD, which guide the Coast Guard in complying with the National Environmental Policy Act of 1969 (NEPA) (42 U.S.C. 4321–4370f), and have made a preliminary determination that this action is one of a category of actions that do not individually or cumulatively have a significant effect on the human environment. This proposed rule involves establishment of a temporary safety zone. This rule is categorically excluded from further review under paragraph 34(g) of Figure 2–1 of the Commandant Instruction. A preliminary environmental analysis checklist supporting this determination and a Categorical Exclusion Determination are available in the docket where indicated under **ADDRESSES**. We seek any comments or information that may lead to the discovery of a significant environmental impact from this proposed rule.

List of Subjects in 33 CFR Part 165

Harbors, Marine safety, Navigation (water), Reporting and recordkeeping requirements, Security Measures, Waterways.

For the reasons discussed in the preamble, the Coast Guard proposes to amend 33 CFR part 165 as follows:

PART 165—REGULATED NAVIGATION AREAS AND LIMITED ACCESS AREAS

■ 1. The authority citation for part 165 continues to read as follows:

Authority: 33 U.S.C. 1226, 1231; 46 U.S.C. Chapter 701, 3306, 3703; 50 U.S.C. 191, 195; 33 CFR 1.05–1, 6.04–1, 6.04–6, and 160.5; Pub. L. 107–295, 116 Stat. 2064; Department of Homeland Security Delegation No. 0170.1.

■ 2. Add § 165.T11–564 to read as follows:

§ 165.T11–564 Safety Zone; Coronado Fourth Of July Fireworks, Glorietta Bay; Coronado, CA

(a) *Location.* The zone will include all navigable waters within 800 feet of the fireworks barge located in Glorietta Bay in approximate position: 32° 40′43.0″ N, 117° 10′14.3″ W.

(b) *Enforcement Period.* This section will be enforced from 8:45 p.m. to 10:00 p.m. on July 4, 2013. If the event concludes prior to the scheduled termination time, the Captain of the Port will cease enforcement of this safety zone and will announce that fact via Broadcast Notice to Mariners.

(c) *Definitions.* The following definition applies to this section: *Designated representative,* means any commissioned, warrant, or petty officer of the Coast Guard on board Coast Guard, Coast Guard Auxiliary, and local, state, and federal law enforcement vessels who have been authorized to act on the behalf of the Captain of the Port.

(d) *Regulations.* (1) Entry into, transit through or anchoring within this safety zone is prohibited unless authorized by the Captain of the Port of San Diego or his designated representative.

(2) All persons and vessels shall comply with the instructions of the Coast Guard Captain of the Port or his designated representative.

(3) Upon being hailed by U.S. Coast Guard patrol personnel by siren, radio, flashing light, or other means, the operator of a vessel shall proceed as directed.

(4) The Coast Guard may be assisted by other federal, state, or local agencies.

Dated: May 2, 2013.

S.M. Mahoney,

Captain, U.S. Coast Guard, Captain of the Port San Diego.

[FR Doc. 2013–11747 Filed 5–16–13; 8:45 am]

BILLING CODE 9110–04–P

ENVIRONMENTAL PROTECTION AGENCY

40 CFR Part 52

[EPA–R04–OAR–2013–0044; FRL–9814–4]

Approval and Promulgation of Implementation Plans; Tennessee; Transportation Conformity Revisions

AGENCY: Environmental Protection Agency.

ACTION: Proposed rule.

SUMMARY: EPA is proposing to approve a State Implementation Plan (SIP) revision submitted by the State of Tennessee, through the Tennessee Department of Environment and

Conservation, Bureau of Environment, Air Pollution Control Division, on July 12, 2012. This revision consists of updates to transportation conformity criteria and procedures related to interagency consultation and enforceability of certain transportation-related control and mitigation measures. The intended effect is to update the transportation conformity criteria and procedures in the Tennessee SIP. This action is being taken pursuant to section 110 of the Clean Air Act. In the final rules section of this issue of the **Federal Register**, EPA is approving the State's SIP revision as a direct final rule without prior proposal because the Agency views this as a noncontroversial submittal and anticipates no adverse comments. A detailed rationale for the approval is set forth in the direct final rule. If no adverse comments are received in response to this rule, no further activity is contemplated. If EPA receives adverse comments, the direct final rule will be withdrawn and all public comments received will be addressed in a subsequent final rule based on this proposed rule. EPA will not institute a second comment period on this document. Any parties interested in commenting on this document should do so at this time.

DATES: Written comments must be received on or before June 17, 2013.

ADDRESSES: Submit your comments, identified by Docket ID No. EPA–R04–OAR–2013–0044, by one of the following methods:

1. *www.regulations.gov:* Follow the on-line instructions for submitting comments.
2. *Email: R4–RDS@epa.gov.*
3. *Fax:* (404) 562–9019.
4. *Mail:* ''EPA–R04–OAR–2013–0044,'' Air Quality Modeling and Transportation Section, Air Planning Branch, Air, Pesticides and Toxics Management Division, U.S. Environmental Protection Agency, Region 4, 61 Forsyth Street SW., Atlanta, Georgia 30303–8960.
5. *Hand Delivery or Courier:* Kelly Sheckler, Air Quality Modeling and Transportation Section, Air Planning Branch, Air, Pesticides and Toxics Management Division, U.S. Environmental Protection Agency, Region 4, 61 Forsyth Street SW., Atlanta, Georgia 30303–8960. Such deliveries are only accepted during the Regional Office's normal hours of operation. The Regional Office's official hours of business are Monday through Friday, 8:30 to 4:30, excluding federal holidays.

Please see the direct final rule which is located in the Rules section of this **Federal Register** for detailed instructions on how to submit comments.

FOR FURTHER INFORMATION CONTACT: Amanetta Somerville or Kelly Sheckler, Air Quality Modeling and Transportation Section, Air Planning Branch, Air, Pesticides and Toxics Management Division, U.S. Environmental Protection Agency, Region 4, 61 Forsyth Street SW., Atlanta, Georgia 30303–8960. Ms. Somerville's telephone number is 404–562–9025. She can also be reached via electronic mail at *sheckler.kelly@epa.gov.* Ms. Sheckler's telephone number is 404–562–9222. She can also be reached via electronic mail at *sheckler.kelly@epa.gov*.

SUPPLEMENTARY INFORMATION: For additional information see the direct final rule which is published in the final rules section of this issue of the **Federal Register**.

Dated: May 8, 2013.

A. Stanley Meiburg,

Acting Regional Administrator, Region 4.

[FR Doc. 2013–11678 Filed 5–16–13; 8:45 am]

BILLING CODE 6560–50–P

FEDERAL COMMUNICATIONS COMMISSION

47 CFR Part 54

[CC Docket Nos. 01–92 and 94–45; GN Docket No. 09–51; WC Docket Nos. 10–92, 07–135, 05–337, and 03–109; WT Docket No. 10–208; Report No. 2975]

Petition for Reconsideration of Action in Rulemaking Proceeding

AGENCY: Federal Communications Commission.

ACTION: Petition for reconsideration.

SUMMARY: In this document, a Petition for Reconsideration and Clarification (Petition) has been filed in the Commission's Rulemaking proceeding by David Cohen on behalf of United States Telecom Association.

DATES: Oppositions to the Petition must be filed on or before June 3, 2013. Replies to an opposition must be filed on or before June 11, 2013.

ADDRESSES: Federal Communications Commission, 445 12th Street SW., Washington, DC 20554.

FOR FURTHER INFORMATION CONTACT: Alexander Minard, Wireline Competition Bureau, (202) 418–7400 or TTY: (202) 418–0484.

SUPPLEMENTARY INFORMATION: This is a summary of Commission document Report No. 2975, released May 1, 2013. The full text of Report No. 2975 is available for viewing and copying in Room CY–B402, 445 12th Street SW., Washington, DC, 20554, or may be purchased from the Commission's copy contractor, Best Copy and Printing, Inc. (BCPI) (1–800–378–3160). The Commission will not send a copy of this *Notice* pursuant to the Congressional Review Act, 5 U.S.C. 801(a)(1)(A), because this *Notice* does not have an impact on any rules of particular applicability.

Subject: Connect America Fund: A National Broadband Plan for Our Future; Establishing Just and Reasonable Rates for Local Exchange Carriers; High-Cost Universal Service Support; Developing a Unified Intercarrier Compensation Regime; Federal-State Joint Board on Universal Service; Lifeline and Link-Up; Universal Service Reform—Mobility Fund, document DA 13–332, published at 78 FR 22198, April 15, 2013, in WC Docket Nos. 10–90, 07–135, 05–337, 03–109, GN Docket No. 09–51, CC Docket Nos. 01–92, 96–45, WT Docket No. 10–208, and published pursuant to 47 CFR 1.429(e). *See also* 1.4(b)(1) of the Commission's rules.

Number of Petitions Filed: 1.

Federal Communications Commission.

Gloria J. Miles,

Federal Register Liaison, Office of the Secretary, Office of Managing Director.

[FR Doc. 2013–11796 Filed 5–16–13; 8:45 am]

BILLING CODE 6712–01–P

FEDERAL COMMUNICATIONS COMMISSION

47 CFR Part 54

[WC Docket Nos. 10–90 and 05–337; Report No. 2976]

Petition for Reconsideration of Action in Rulemaking Proceeding

AGENCY: Federal Communications Commission.

ACTION: Petition for reconsideration.

SUMMARY: In this document, a Petition for Reconsideration (Petition) has been filed in the Commission's Rulemaking proceeding filed by Derrick Owens, Jerry Weikle, Gerald J. Duffy, and Richard A. Askoff on behalf of the Western Telecommunications Alliance, the Eastern Rural Telecom Association, and the National Exchange Carrier Association, Inc.

DATES: Oppositions to the Petition must be filed on or before June 3, 2013. Replies to an opposition must be filed on or before June 11, 2013.

ADDRESSES: Federal Communications Commission, 445 12th Street SW., Washington, DC 20554.

FOR FURTHER INFORMATION CONTACT: Heidi Lankau, Wireline Competition Bureau, (202) 418–2876 or TTY: (202) 418–0484.

SUPPLEMENTARY INFORMATION: This is a summary of Commission's document, Report No. 2976, released May 3, 2013, The full text of Report No. 2976 is available for viewing and copying in Room CY–B402, 445 12th Street SW., Washington, DC or may be purchased from the Commission's copy contractor, Best Copy and Printing, Inc. (BCPI) (1–800–378–3160). The Commission will not send a copy of this *Notice* pursuant to the Congressional Review Act, 5 U.S.C. 801(a)(1)(A), because this *Notice* does not have an impact on any rules of particular applicability.

Subject: Connect America Fund; High-Cost Universal Service Support, published at 78 FR 16808, March 19, 2013 in WC Docket Nos. 10–90, 05–337,and published pursuant to 47 CFR 1.429(e). *See also* 1.4(b)(1) of the Commission's rules.

Number of Petitions Filed: 1

Federal Communications Commission.

Gloria J. Miles,

Federal Register Liaison, Office of the Secretary, Office of Managing Director.

[FR Doc. 2013–11798 Filed 5–16–13; 8:45 am]

BILLING CODE 6712–01–P

DEPARTMENT OF COMMERCE

National Oceanic and Atmospheric Administration

50 CFR Parts 223 and 224

[Docket No. 121120640–3457–01]

RIN 0648–XC365

Endangered and Threatened Wildlife; 90-Day Finding on a Petition To List Iliamna Lake Seals as a Threatened or Endangered Species

AGENCY: National Marine Fisheries Service (NMFS), National Oceanic and Atmospheric Administration (NOAA), Commerce.

ACTION: Notice of 90-day petition finding; request for information.

SUMMARY: We, NMFS, announce a 90-day finding on a petition to list the Pacific harbor seals in Iliamna Lake (*Phoca vitulina richardii*) as threatened or endangered under the Endangered Species Act (ESA). We find that the petition presents substantial scientific or commercial information indicating that the petitioned action may be warranted. Therefore, we are initiating a status review of the harbor seals in Iliamna Lake to determine if listing under the ESA is warranted. To ensure this status review is comprehensive, we solicit scientific and commercial information regarding this species.

DATES: Information and comments must be received by July 16, 2013.

ADDRESSES: You may submit comments on this document, identified by FDMS Docket Number NOAA–NMFS–2012–0236 by any of the following methods:

- *Electronic Submission:* Submit all electronic public comments via the Federal e-Rulemaking Portal. Go to *www.regulations.gov/#!docketDetail;D=NOAA-NMFS-2012-0236,* click the ''Comment Now!'' icon, complete the required fields, and enter or attach your comments.
- *Mail:* Address written comments to Jon Kurland, Assistant Regional Administrator for Protected Resources, Alaska Region NMFS, Attn: Ellen Sebastian. Mail comments to P.O. Box 21668, Juneau, AK 99802–1668.
- *Fax:* Address written comments to Jon Kurland, Assistant Regional Administrator for Protected Resources, Alaska Region NMFS, Attn: Ellen Sebastian. Fax comments to 907–586–7557.
- *Hand delivery to the Federal Building:* Address written comments to Jon Kurland, Assistant Regional Administrator for Protected Resources, Alaska Region NMFS, Attn: Ellen Sebastian. Deliver comments to 709 West 9th Street, Room 420A, Juneau, AK.

Instructions: Comments sent by any other method, to any other address or individual, or received after the end of the comment period, may not be considered by NMFS. All comments received are a part of the public record and will generally be posted for public viewing on *www.regulations.gov* without change. All personal identifying information (e.g., name, address, etc.), confidential business information, or otherwise sensitive information submitted voluntarily by the sender will be publicly accessible. NMFS will accept anonymous comments (enter ''N/A'' in the required fields if you wish to remain anonymous). Attachments to electronic comments will be accepted in Microsoft Word, Excel, or Adobe PDF file formats only.

Interested persons may obtain a copy of the petition online at the NMFS Alaska Region Web site: *http://www.alaskafisheris.noaa.gov/protectedresources/seals/harbor.htm.*

FOR FURTHER INFORMATION CONTACT: Mandy Migura, NMFS Alaska Region, (907) 271–1332; Jon Kurland, NMFS Alaska Region, (907) 586–7638; or Lisa Manning, NMFS Office of Protected Resources, (301) 427–8466.

SUPPLEMENTARY INFORMATION:

ESA Statutory, Regulatory, and Policy Provisions

Section 4(b)(3)(A) of the ESA of 1973, as amended (16 U.S.C. 1531 *et seq.*) requires that, to the maximum extent practicable, within 90 days of the receipt of a petition to list a species as threatened or endangered, the Secretary of Commerce (Secretary) make a finding as to whether that petition presents substantial scientific or commercial information indicating that the petitioned action may be warranted, and promptly publish such finding in the **Federal Register** (16 U.S.C. 1533(b)(3)(A)).

Joint ESA-implementing regulations between NMFS and the U.S. Fish and Wildlife Service (USFWS) define ''substantial information'' in the context of reviewing a petition to list, delist, or reclassify a species as the amount of information that would lead a reasonable person to believe that the measure proposed in the petition may be warranted. When evaluating whether substantial information is contained in a petition, the Secretary must consider whether the petition: (i) Clearly indicates the administrative measure recommended, and gives the scientific and any common name of the species involved; (ii) contains detailed narrative justification for the recommended measure, describing, based on available information, past and present numbers and distribution of the species involved and any threats faced by the species; (iii) provides information regarding the status of the species over all or a significant portion of its range; and (iv) is accompanied by appropriate supporting documentation in the form of bibliographic references, reprints of pertinent publications, copies of reports or letters from authorities, and maps (50 CFR 424.14(b)(2)).

When we find that substantial information in a petition indicates the petitioned action may be warranted (a ''positive 90-day finding''), we are required to promptly commence a review of the status of the species concerned (a ''status review''), which includes conducting a comprehensive review of the best available scientific and commercial information. Within 12 months of receiving the petition, we must conclude the review with a finding as to whether, in fact, the petitioned action is warranted. Because the finding

at the 12-month stage is based on a more thorough review of the available information, a positive 90-day finding does not prejudge the outcome of the status review.

Court decisions clarify the appropriate scope and limitations of the Services' review of petitions at the 90-day finding stage in making a determination as to whether a petitioned action may be warranted. As a general matter, these decisions hold that a petition need not establish a strong likelihood or a high probability that a species is either threatened or endangered to support a positive 90-day finding. Decisions under the ESA must be based on the best scientific and commercial data available. We evaluate the petitioner's request based upon the information in the petition including its references, and the information readily available in our files. If the petitioner's sources are based on accepted scientific principles, we will accept them and characterizations of the information presented unless we have specific information in our files that indicates the petition's information is incorrect, unreliable, obsolete, or otherwise irrelevant to the requested action. Information that is susceptible to more than one interpretation or that is contradicted by other available information will not be dismissed at the 90-day finding stage, so long as it is reliable and a reasonable person would conclude it supports the petitioner's assertions. In other words, conclusive information indicating the species may meet the ESA's requirements for listing is not required to make a positive 90-day finding. We will not conclude that a lack of specific information alone negates a positive 90-day finding, if a reasonable person would conclude that the unknown information itself suggests an extinction risk of concern for the species at issue.

To make a 90-day finding on a petition to list a species, we evaluate whether the petition presents substantial scientific or commercial information indicating the subject species may be either threatened or endangered, as defined by the ESA. First, we evaluate whether the information presented in the petition, along with the information readily available in our files, indicates that the petitioned entity may constitute a ''species'' eligible for listing under the ESA. Then, we evaluate whether the information indicates that the species faces extinction risk that is cause for concern; this may be indicated in information expressly discussing the species' status and trends, or in information describing impacts and threats to the species. Information presented on impacts or threats should be specific to the species and should reasonably suggest that one or more of the threats act, will act, or have acted on the species to the point that it may warrant protection under the ESA. Broad statements about generalized threats to the species, or identification of factors that could negatively impact a species, do not constitute substantial information that listing may be warranted.

Under the ESA, a listing determination may address a species, subspecies, or a distinct population segment (DPS) of any vertebrate species which interbreeds when mature (16 U.S.C. 1532(16)). In 1996, the USFWS and NMFS published the Policy Regarding the Recognition of Distinct Vertebrate Population Segments under the ESA (DPS Policy, 61 FR 4722; February 7, 1996). This policy clarifies the agencies' interpretation of the phrase ''distinct population segment of any species of vertebrate fish or wildlife'' (ESA section 3(16)) for the purposes of listing, delisting, and reclassifying a species under the ESA (61 FR 4722; February 7, 1996). The policy established two criteria that must be met for a population or group of populations to be considered a DPS: (1) The population segment must be discrete in relation to the remainder of the species (or subspecies) to which it belongs; and (2) the population segment must be significant to the remainder of the species (or subspecies) to which it belongs. A population segment may be considered discrete if it satisfies either one of the following conditions: (1) it is markedly separated from other populations of the same biological taxon as a consequence of physical, physiological, ecological, or behavioral factors (quantitative measures of genetic or morphological discontinuity may provide evidence of this separation); or (2) it is delimited by international governmental boundaries across which there is a significant difference in exploitation control, habitat management, conservation status, or if regulatory mechanisms exist that are significant in light of section 4(a)(1) of the ESA. If a population is determined to be discrete, the agency must then consider whether it is significant to the taxon to which it belongs. Considerations in evaluating the significance of a discrete population include: (1) Persistence of the discrete population in an unusual or unique ecological setting for the taxon; (2) evidence that the loss of the discrete population segment would cause a significant gap in the taxon's range; (3) evidence that the discrete population segment represents the only surviving natural occurrence of a taxon that may be more abundant elsewhere outside its historical geographical range; or (4) evidence that the discrete population has marked genetic differences from other populations of the species.

A species, subspecies, or DPS is ''endangered'' if it is in danger of extinction throughout all or a significant portion of its range, and ''threatened'' if it is likely to become endangered within the foreseeable future throughout all or a significant portion of its range (ESA section 3(6) and 3(20), respectively, 16 U.S.C. 1532(6) and (20)). Section 4(a)(1) of the ESA requires the Secretary to determine whether a species is endangered or threatened due to of any of the following factors: (1) The present or threatened destruction, modification, or curtailment of its habitat or range; (2) overutilization for commercial, recreational, scientific, or educational purposes; (3) disease or predation; (4) inadequacy of existing regulatory mechanisms; or (5) other natural or manmade factors affecting the species continuing existence (16 U.S.C. 1533(a)(1)). An ''endangered'' or ''threatened'' determination is not made during the 90-day review of the petition, but rather is determined subsequent to a status review.

Analysis of the Petition

On November 19, 2012, we received a petition from the Center for Biological Diversity (CBD) to list the harbor seals in Iliamna Lake, Alaska as a threatened or endangered species under the ESA and to designate critical habitat concurrent with listing. According to NMFS's 2012 Stock Assessment Reports (*http://www.nmfs.noaa.gov/pr/pdfs/sars/*), harbor seals in Alaska are divided into 12 separate stocks, as defined by the Marine Mammal Protection Act. Harbor seals in Iliamna Lake are currently considered as part of the Bristol Bay harbor seal stock.

CBD asserts that the harbor seals found in Iliamna Lake constitute a DPS of Pacific harbor seals and refers to them in the petition as ''Iliamna Lake seals.'' CBD asserts that the seals in Iliamna Lake face the following threats: (1) Habitat modification and disturbance associated with the Pebble Project (a copper-gold-molybdenum porphyry deposit in the advanced exploration stage located north of Iliamna Lake) and climate change; (2) disease and natural predation; (3) other natural and anthropogenic factors including risks of rarity, entanglement in fishing gear, illegal hunting, oil and gas exploration

and development, contaminants, and commercial fisheries; and (4) inadequacy of existing regulatory mechanisms for addressing greenhouse gas emissions, climate change, ocean acidification, and the Pebble Project. CBD concludes that the combination of being a small, isolated population with the identified threats qualifies the seals in Iliamna Lake for listing as a threatened or endangered species under the ESA.

Petition Finding

We have reviewed the petition, the literature cited in the petition, and other literature and information available in our files; we identified numerous factual errors, misquoted and incomplete references, and unsupported conclusions within the petition. Our review indicates that there is uncertainty and conflicting information specific to the harbor seals in Iliamna Lake. The seals inhabiting Iliamna Lake are not well studied, but there is some evidence that at least a small number of seals remain in the lake year-round. Currently, there is uncertainty and conflicting information about whether Pacific harbor seals migrate between Iliamna Lake and Bristol Bay. If there is no migration, and these seals are distinct from those in Bristol Bay, then they may face potentially serious threats including low abundance, the Pebble Project and climate change. Given this uncertainty, and considering the requirements of 50 CFR 424.14(b) and standards for addressing petitions at the 90-day stage, we find that the information presented in the petition and information readily available in our files would lead a reasonable person to believe that the petitioned action may be warranted. Therefore, we are making a positive 90-day finding and will promptly commence a status review of Iliamna Lake seals.

Request for Information

As a result of the finding, we will commence a status review of Pacific harbor seals in Iliamna Lake to determine: (1) If the Pacific harbor seals in Iliamna Lake constitute a DPS under the ESA, and if so, (2) the risk of extinction to this DPS. Based on the results of the status review, we will then determine whether listing the Pacific harbor seals of Iliamna Lake as threatened or endangered under the ESA is warranted. We intend that any final action resulting from this status review be as accurate as possible. Therefore, we are opening a 60-day public comment period to solicit comments and information from the public, government agencies, the scientific community, industry, Alaska Native tribes and organizations, and any other interested parties on the status of the Pacific harbor seals in Iliamna Lake, including:

(1) Information on taxonomy, abundance, reproductive success, age structure, distribution and population connectivity, habitat selection, food habits, population density and trends, and habitat trends;

(2) Information on the effects of potential threats, including the Pebble Project and climate change, on the distribution and abundance of seals in Iliamna Lake and their principal prey over the short- and long-term;

(3) Information on the effects of other potential threats, including disease and predation, contaminants, fishing, hunting, industrial activities, or other known or potential threats;

(4) Information on management or conservation programs for harbor seals in Iliamna Lake, including mitigation measures associated with private, tribal or governmental conservation programs which benefit harbor seals in Iliamna Lake;

(5) Information on the effects of research on the harbor seals in Iliamna Lake; and

(6) Information relevant to whether harbor seals in Iliamna Lake may qualify as a DPS.

We request that all data and information be accompanied by supporting documentation such as maps, bibliographic references, or reprints of pertinent publications. Please send any comments to the **ADDRESSES** listed above. We will base our findings on a review of best available scientific and commercial information available, including all information received during the public comment period.

Authority: The authority for this action is the Endangered Species act of 1973, as amended (16 U.S.C. 1531 *et seq.*).

Dated: May 13, 2013.

Alan D. Risenhoover,

Director, Office of Sustainable Fisheries, performing the functions and duties of the Deputy Assistant Administrator for Regulatory Programs, National Marine Fisheries Service.

[FR Doc. 2013–11869 Filed 5–16–13; 8:45 am]

BILLING CODE 3510–22–P

DEPARTMENT OF COMMERCE

National Ocean and Atmospheric Administration

50 CFR Parts 223 and 224

[Docket No. 130214141–3141–01]

RIN 0648–XC515

Endangered and Threatened Wildlife; 90-Day Finding on Petitions To List the Dusky Shark as Threatened or Endangered Under the Endangered Species Act

AGENCY: National Marine Fisheries Service (NMFS), National Oceanic and Atmospheric Administration (NOAA), Commerce.

ACTION: 90-day petition finding, request for information, and initiation of status review.

SUMMARY: We, NMFS, announce a 90-day finding on petitions to list the dusky shark (*Carcharhinus obscurus*) range-wide or, in the alternative, the Northwest Atlantic and Gulf of Mexico population of the dusky shark as a threatened or endangered distinct population segment (DPS) under the Endangered Species Act (ESA), and to designate critical habitat concurrently with the listing. We find that the petitions present substantial scientific or commercial information indicating that the petitioned action may be warranted for the Northwest Atlantic and Gulf of Mexico population of dusky shark; we find that the petitions fail to present substantial scientific or commercial information indicating that the petitioned action may be warranted for the dusky shark range-wide. Therefore, we will conduct a status review of the Northwest Atlantic and Gulf of Mexico population of dusky shark to determine if the petitioned action is warranted. To ensure that the status review is comprehensive, we are soliciting scientific and commercial information pertaining to this petitioned species from any interested party.

DATES: Information and comments on the subject action must be received by July 16, 2013.

ADDRESSES: You may submit comments, information, or data on this document, identified by the code NOAA–NMFS–2013–0045, by any of the following methods:

• *Electronic Submissions:* Submit all electronic comments via the Federal eRulemaking Portal. Go to *www.regulations.gov/#!docketDetail;D=NOAA-NMFS-2013-0045,* click the ''Comment Now!'' icon,

complete the required fields, and enter or attach your comments.

• *Mail:* Submit written comments to Office of Protected Resources, NMFS, 1315 East-West Highway, Silver Spring, MD 20910.

• *Fax:* 301–713–4060, Attn: Maggie Miller.

Instructions: Comments sent by any other method, to any other address or individual, or received after the end of the comment period, may not be considered by NMFS. All comments received are a part of the public record and will generally be posted for public viewing on *www.regulations.gov* without change. All personal identifying information (e.g., name, address, etc.), confidential business information, or otherwise sensitive information submitted voluntarily by the sender will be publicly accessible. NMFS will accept anonymous comments (enter ''N/A'' in the required fields if you wish to remain anonymous), although submitting comments anonymously will prevent NMFS from contacting you if NMFS has difficulty retrieving your submission. Attachments to electronic comments will be accepted in Microsoft Word, Excel, or Adobe PDF file formats only.

FOR FURTHER INFORMATION CONTACT: Maggie Miller, NMFS, Office of Protected Resources, (301) 427–8403.

SUPPLEMENTARY INFORMATION:

Background

On November 14, 2012, we received a petition from WildEarth Guardians (WEG) to list the dusky shark (*Carcharhinus obscurus*) as threatened or endangered under the ESA throughout its entire range, or, as an alternative, to list the Northwest Atlantic/Gulf of Mexico DPS as threatened or endangered. The petitioners also requested that critical habitat be designated for the dusky shark under the ESA. On February 1, 2013, we received a petition from Natural Resources Defense Council (NRDC) to list the northwest Atlantic DPS of dusky shark as threatened, or, as an alternative, to list the dusky shark range-wide as threatened, and a request that critical habitat be designated. The joint USFWS/NMFS petition management handbook states that if we receive two equivalent petitions for the same species and a 90-day finding has not yet been made on the earlier petition, then the later petition will be combined with the earlier petition and a combined 90-day finding will be prepared. Given that, this 90-day finding will address both the WEG and NRDC petitions for dusky shark. Copies of the petitions are available upon request (see **ADDRESSES,** above).

ESA Statutory, Regulatory, and Policy Provisions and Evaluation Framework

Section 4(b)(3)(A) of the ESA of 1973, as amended (16 U.S.C. 1531 *et seq.*), requires, to the maximum extent practicable, that within 90 days of receipt of a petition to list a species as threatened or endangered, the Secretary of Commerce make a finding on whether that petition presents substantial scientific or commercial information indicating that the petitioned action may be warranted, and to promptly publish such finding in the **Federal Register** (16 U.S.C. 1533(b)(3)(A)). When it is found that substantial scientific or commercial information in a petition indicates the petitioned action may be warranted (a ''positive 90-day finding''), we are required to promptly commence a review of the status of the species concerned, during which we will conduct a comprehensive review of the best available scientific and commercial information. In such cases, we conclude the review with a finding as to whether, in fact, the petitioned action is warranted within 12 months of receipt of the petition. Because the finding at the 12-month stage is based on a more thorough review of the available information, as compared to the narrow scope of review at the 90-day stage, a ''may be warranted'' finding does not prejudge the outcome of the status review.

Under the ESA, a listing determination may address a species, which is defined to also include subspecies and, for any vertebrate species, any DPS that interbreeds when mature (16 U.S.C. 1532(16)). A joint NMFS–U.S. Fish and Wildlife Service (USFWS) (jointly, ''the Services'') policy clarifies the agencies' interpretation of the phrase ''distinct population segment'' for the purposes of listing, delisting, and reclassifying a vertebrate species under the ESA (61 FR 4722; February 7, 1996) (''DPS Policy''). A species is ''endangered'' if it is in danger of extinction throughout all or a significant portion of its range, and ''threatened'' if it is likely to become endangered within the foreseeable future throughout all or a significant portion of its range (ESA sections 3(6) and 3(20), respectively, 16 U.S.C. 1532(6) and (20)). Pursuant to the ESA and our implementing regulations, we determine whether species are threatened or endangered based on any one or a combination of the following five section 4(a)(1) factors: (1) The present or threatened destruction, modification, or curtailment of habitat or range; (2) overutilization for commercial, recreational, scientific, or educational purposes; (3) disease or predation; (4) inadequacy of existing regulatory mechanisms; and (5) any other natural or manmade factors affecting the species' existence (16 U.S.C. 1533(a)(1), 50 CFR 424.11(c)). In evaluating whether a population constitutes a significant portion of the species' range, we consider the portion of the range to be significant if its contribution to the overall viability of the species is so important that, without it, the species may be in danger of extinction. These considerations are consistent with interpretations and principles in the NMFS and USFWS Draft Policy on Interpretation of the Phrase ''Significant Portion of Its Range'' in the Endangered Species Act's Definitions of ''Endangered Species'' and ''Threatened Species,'' which we consider as nonbinding guidance in making listing determinations until a final policy is published. In the draft policy, the Services explain that this definition of ''significant'' for the purpose of analyzing whether a population constitutes a significant portion of a species range differs from the definition of ''significant'' defined in the Services' DPS Policy and used for DPS analysis (76 FR 76987; December 9, 2011).

ESA-implementing regulations issued jointly by NMFS and USFWS (50 CFR 424.14(b)) define ''substantial information'' in the context of reviewing a petition to list, delist, or reclassify a species as the amount of information that would lead a reasonable person to believe that the measure proposed in the petition may be warranted. In evaluating whether substantial information is contained in a petition, the Secretary must consider whether the petition: (1) Clearly indicates the administrative measure recommended and gives the scientific and any common name of the species involved; (2) contains detailed narrative justification for the recommended measure, describing, based on available information, past and present numbers and distribution of the species involved and any threats faced by the species; (3) provides information regarding the status of the species over all or a significant portion of its range; and (4) is accompanied by the appropriate supporting documentation in the form of bibliographic references, reprints of pertinent publications, copies of reports or letters from authorities, and maps (50 CFR 424.14(b)(2)).

Judicial decisions have clarified the appropriate scope and limitations of the Services' review of petitions at the 90-

day finding stage, in making a determination that a petitioned action ''may be'' warranted. As a general matter, these decisions hold that a petition need not establish a ''strong likelihood'' or a ''high probability'' that a species is either threatened or endangered to support a positive 90-day finding.

We evaluate the petitioners' request based upon the information in the petition including its references and the information readily available in our files. We do not conduct additional research, and we do not solicit information from parties outside the agency to help us in evaluating the petition. We will accept the petitioners' sources and characterizations of the information presented if they appear to be based on accepted scientific principles, unless we have specific information that indicates that the petition's information is incorrect, unreliable, obsolete, or otherwise irrelevant to the requested action. Information that is susceptible to more than one interpretation or that is contradicted by other available information will not be dismissed at the 90-day finding stage, so long as it is reliable and a reasonable person would conclude that it supports the petitioners' assertions. In other words, conclusive information indicating that the species may meet the ESA's requirements for listing is not required to make a positive 90-day finding. We will not conclude that a lack of specific information alone negates a positive 90-day finding if a reasonable person would conclude that the unknown information itself suggests an extinction risk of concern for the species at issue.

To make a 90-day finding on a petition to list a species, we evaluate whether the petition presents substantial scientific or commercial information indicating that the subject species may be either threatened or endangered, as defined by the ESA. First, if the petition requests listing of a subspecies or a DPS, we evaluate whether the information presented in the petition, along with the information readily available in our files, indicates that the petitioned entity constitutes a ''species'' eligible for listing under the ESA, pursuant to the DPS Policy. Next, we evaluate whether the information indicates that the species faces an extinction risk that is cause for concern throughout all or a significant portion of its range; this may be indicated in information expressly discussing the species' status and trends, or in information describing impacts and threats to the species. We evaluate any information on specific demographic factors pertinent to evaluating extinction risk for the species (e.g., population abundance and trends, productivity, spatial structure, age structure, sex ratio, diversity, current and historical range, habitat integrity or fragmentation), and the potential contribution of identified demographic risks to extinction risk for the species. We then evaluate the potential links between these demographic risks and the causative impacts and threats identified in section 4(a)(1). Information presented on impacts or threats should be specific to the species and should reasonably suggest that one or more of these factors may be operative threats that act or have acted on the species to the point that it may warrant protection under the ESA. Broad statements about generalized threats to the species, or identification of factors that could negatively impact a species, do not constitute substantial information indicating that listing may be warranted. We look for information indicating that not only is the particular species exposed to a factor, but that the species may be responding in a negative fashion; then we assess the potential significance of that negative response.

Many petitions identify risk classifications made by non-governmental organizations, such as the International Union on the Conservation of Nature (IUCN), the American Fisheries Society, or NatureServe, as evidence of extinction risk for a species. Risk classifications by other organizations or made under other Federal or state statutes may be informative, but the classification alone may not provide the rationale for a positive 90-day finding under the ESA. For example, as explained by NatureServe, their assessments of a species' conservation status do ''not constitute a recommendation by NatureServe for listing under the U.S. Endangered Species Act'' because NatureServe assessments ''have different criteria, evidence requirements, purposes and taxonomic coverage than government lists of endangered and threatened species, and therefore these two types of lists should not be expected to coincide'' (*http://www.natureserve.org/prodServices/statusAssessment.jsp*). Thus, when a petition cites such classifications, we will evaluate the source of information that the classification is based upon in light of the standards on extinction risk and impacts or threats discussed above.

Distribution and Life History of the Dusky Shark

The dusky shark is part of the Carcharhinidae family. It is a coastal-pelagic species that inhabits warm temperate and tropical waters (FAO, 2012). It has a global but patchy distribution, with its range-wide occurrence poorly known. In the Northwest Atlantic, dusky sharks can be found from southern Massachusetts and Georges Bank to Florida, the Bahamas, Cuba, and the northern Gulf of Mexico (NMFS, 2011a). Dusky shark distribution off Central America is not well known (NMFS, 2011a). In the Eastern Pacific, the species is thought to occur off the coast of southern California to the Gulf of California, Revillagigedo Islands, and possibly Chile (NOAA, 1998; Musick *et al.,* 2007). The species can also be found off the coasts of Australia, Nicaragua, and southern Brazil (NMFS, 2011a). According to Dudley *et al.* (2005), the shark's distribution in the western Indian Ocean extends from the Red Sea to the southern tip of Africa and off the coast of Madagascar. The species is also thought to be found in the Mediterranean Sea, and off the coasts and continental shelves of Japan, China, Vietnam, New Caledonia, and North Africa, possibly around oceanic islands off western Africa (Musick *et al.,* 2007; NMFS, 2011a).

The dusky shark is a highly migratory species that occurs in both inshore (surf zone) and offshore waters, from the surface to depths as deep as 1,883 feet (574 m) (NOAA, 1998; Hoffmayer *et al.,* 2010; NMFS, 2011a). The shark avoids areas of lower salinity and is rarely found in estuarine environments (NOAA, 1998; SEDAR, 2011). Along the U.S. coasts, the dusky shark undertakes long temperature-related migrations, moving north in the summer as waters warm and retreating south in the fall as water temperatures drop (NMFS, 2011a). Seasonal migrations have also been documented off South Africa (NOAA, 1998). In western Australia, both adolescents and adults move inshore during the summer and fall, with neonates occupying separate inshore areas (NOAA, 1998).

The general life history pattern of the dusky shark is that of a long lived (oldest known female shark aged at 39 years), slow growing, and late maturing species (SEDAR, 2011). The dusky shark is a large, fairly slender shark, with an average total length (TL) of around 11.8 feet (360 cm) and weight of 400 pounds (180 kg) (NMFS, 2011a). Northwest Atlantic and Gulf of Mexico dusky males attain sexual maturity at around 280 cm TL, or 19 years, and females reach sexual maturity at 284 cm TL, or 21 years (NOAA, 1998; NMFS, 2011a). Similar maturity sizes have been observed for dusky sharks from South

Africa and Australia (NOAA, 1998). The dusky shark is viviparous (i.e., gives birth to live young), with a gestation period of around 18 months and a triennial reproductive cycle (SEDAR, 2011). Litter sizes range between 3 and 14 pups (NMFS, 2011a; SEDAR, 2011) with the pupping months for the Northwest Atlantic and Gulf of Mexico dusky population occurring from May to June. Young are born at sizes of 33 to 39 inches (85—100 cm) (NMFS, 2011a).

The shark has a rounded snout that is shorter than or equal to the width of its mouth and a low ridge along its back between its dorsal fins (NMFS, 2011a). The dorsal fin originates over or near the free rear tips of moderately large pectoral fins, and the second dorsal fin has a free tip length that is usually not more than twice its fin height (NMFS, 2011a; FLMNH, undated). The dusky shark is colored bronzy gray to blue gray above and white ventrally, and is also known as the bronze whaler or black whaler (NMFS, 2011a). It is a high trophic level predator (Cortés, 1999) with a diet that includes a wide variety of bony and cartilaginous fishes and squid (NOAA, 1998). In the Indian Ocean, young dusky sharks have been observed feeding in large aggregations (NOAA, 1998).

With respect to ESA listing actions, we added the dusky shark to our candidate species list in 1997 (62 FR 37560; July 14, 1997), but subsequently transferred the Northwest Atlantic and Gulf of Mexico population to our Species of Concern List in 2004 (69 FR 19975; April 15, 2004). There is no mandatory Federal protection for candidate species or species of concern, but voluntary protection is urged.

Analysis of Petition and Information Readily Available in NMFS Files

We evaluated the information provided in the petitions and readily available in our files to determine if the petitions presented substantial scientific or commercial information indicating that the petitioned actions may be warranted. The petitions contain information on the species, including the taxonomy, species description, geographic distribution, habitat, some population status and trends, and factors contributing to the species' decline. According to the WEG petition, at least four of the five causal factors in section 4(a)(1) of the ESA are adversely affecting the continued existence of the dusky shark, specifically: (A) Present and threatened destruction, modification, and curtailment of habitat and range; (B) overutilization for commercial, recreational, scientific, or educational purposes; (D) inadequacy of existing regulatory mechanisms; and (E) other natural or manmade factors affecting its continued existence. The focus of the NRDC petition is mainly on the northwest Atlantic population and identified the threats of: (B) overutilization for commercial, recreational, scientific, or educational purposes; (D) inadequacy of existing regulatory mechanisms; and (E) other natural or manmade factors affecting its continued existence. In the following sections, we use the information presented in the petitions and in our files to determine whether the petitioned action may be warranted. We consider both the information presented for the global population of dusky sharks (as provided primarily in the WEG petition) as well as the information presented for the Northwest Atlantic and Gulf of Mexico population (provided in both petitions) on the specific ESA section 4(a)(1) factors affecting the species' risk of extinction. We provide separate analyses and conclusions regarding the information presented by the petitioners and in our files for the global and for the Northwest Atlantic and Gulf of Mexico populations since we were petitioned to list either the global population (range-wide) or the Northwest Atlantic and Gulf of Mexico population.

Qualification of Northwest Atlantic and Gulf of Mexico Population as a DPS

Both petitions assert that the Northwest Atlantic and Gulf of Mexico population (henceforth referred to as ''NW Atlantic population'') of dusky shark qualifies as a DPS because it is both a discrete and significant population segment of the species as defined in the DPS Policy. The NRDC petition states that the NW Atlantic population is discrete based on both genetic and spatial separation from other populations of dusky sharks. Genetic analyses indicate that the NW Atlantic population of dusky sharks is genetically differentiated from other populations of dusky sharks (Benavides *et al.,* 2011; Gray *et al.,* 2012). Results from both nuclear microsatellite DNA and mitochondrial control region analyses showed significant genetic differentiation between the western North Atlantic, South African, and Australian dusky shark populations, with a low frequency of migration between these populations (Benavides *et al.,* 2011; Gray *et al.,* 2012). Analysis of mitochondrial control regions also indicate that dusky sharks off the U.S. East Coast and in the Gulf of Mexico are not genetically distinct (Benavides *et al.,* 2011), with tagging data that show a high frequency of movements between these two basins (SEDAR, 2011). Furthermore, Benavides *et al.* (2011) provides preliminary evidence of population structure between the NW Atlantic population and the dusky sharks in the Southwest Atlantic (off Brazil), suggesting that the NW Atlantic population, if it were depleted, would not likely be replenished by immigrant females from the Southwest Atlantic population.

In addition to genetic separation, the NRDC contends that the NW Atlantic population is geographically separated from other populations. NRDC indicates that the NW Atlantic population primarily inhabits U.S. waters, and as such is delimited by international governmental boundaries within which differences in control of exploitation, management of habitat, conservation status, or regulatory mechanisms exist that are significant in light of section 4(a)(1)(D) of the ESA.

Both petitions make the case that the NW Atlantic population is significant to the taxon. As described above, the NW Atlantic population appears to be genetically distinct and geographically separate from other dusky shark populations, with evidence of little mixing between neighboring populations (Benavides *et al.,* 2011; Gray *et al.,* 2012). Thus, the petitions reason that loss of this population would result in a significant gap in the range of the species because it is unlikely to be repopulated by sharks from other populations.

Overall, based on the above analysis, we conclude that the information in the two petitions and in our files suggests that the NW Atlantic population of dusky shark may qualify as a DPS under the discreteness and significance criteria of the DPS Policy. We will explore this designation further and conduct a formal DPS analysis during the status review.

Qualification of the Northwest Atlantic and Gulf of Mexico as a Significant Portion of the Range (SPOIR)

The NRDC petition specifically requests that we list the dusky shark as threatened because the species is likely to become endangered in a significant portion of its range (specifically throughout the habitat of the Northwest Atlantic, including the Gulf of Mexico). The WEG petition makes a similar statement: ''The Gulf of Mexico comprises a significant portion of the dusky shark's range'' and focuses part of its threats analysis on this portion. However, we conclude that neither petition presented substantial information, nor is there information in our files, to indicate that the Northwest

Atlantic and Gulf of Mexico is a significant portion of the dusky shark's range. In making this assessment we considered a portion of the range to be significant if its contribution to the overall viability of the dusky shark was so important that, without it, the dusky shark would be in danger of extinction. These considerations are consistent with interpretations and principles in the NMFS and USFWS Draft Policy on Interpretation of the Phrase ''Significant Portion of Its Range'' in the Endangered Species Act's Definitions of ''Endangered Species'' and ''Threatened Species,'' which we consider as nonbinding guidance in making listing determinations until a final policy is published (76 FR 76987; December 9, 2011).

As requested by the NRDC, we considered whether the loss of the northwest Atlantic portion would be expected to increase the entire species' vulnerability to extinction to the point where the global population of dusky sharks would be in danger of extinction. However, neither petition provides substantial evidence that the global population may be at risk of extinction from the loss of the Northwest Atlantic portion, nor do we have information that would support this in our files. The WEG petition presents information on threats to the global population, whereas the NRDC petition does not; however, neither petition presents information about the dependence of the global population on the Northwest Atlantic portion for survival. Therefore, we conclude that the petitions do not provide substantial evidence that the Northwest Atlantic may qualify as a significant portion of the dusky shark's range or that listing of the global population of shark may be warranted because the population is threatened or endangered in a significant portion of its range.

Our analysis below considers the application of the ESA section 4(a)(1) factors to the Northwest Atlantic population in determining whether the WEG and NRDC petitions present substantial information indicating that listing the Northwest Atlantic population may be warranted. In addition, we consider the application of the ESA section 4(a)(1) factors to the global population in determining whether the WEG petition presents substantial information indicating that listing the global population may be warranted.

Factor A: Present and Threatened Destruction, Modification, or Curtailment of Habitat or Range

NW Atlantic Population Analysis

The WEG petition identifies the 2010 Deepwater Horizon oil spill as an event that has degraded the marine environment used by the NW Atlantic population of dusky sharks, but does not provide any information on how the effects of the spill contribute to the extinction risk of the species. It cites a National Geographic Daily News article (Handwerk, 2010) that discusses the potential negative impacts of the spill on whale sharks, a large, filter-feeding species. When feeding, the whale shark swims with its mouth open, filtering over 100,000 gallons of water an hour, capturing prey and passing the water through its gills (Handwerk, 2010). Due to this type of feeding behavior, scientists believe that the oil from the spill may have had lethal impacts to the whale sharks (Handwerk, 2010). Specifically, the article mentions sightings of whale sharks that were unable to avoid the oil slick, and suggests that the oil may have clogged the sharks' gills, suffocating them, or contaminated their prey; however, there have been no reports of dead whale sharks (Handwerk, 2010). The article does not mention the dusky shark or its exposure to the oil. The dusky shark is not a filter-feeder, and thus the effects of the oil spill on the whale shark do not provide information on the effects of the spill on the dusky shark. In addition, the WEG petition does not provide any information on how the oil has affected the dusky sharks' extinction risk, but mentions that researchers are currently studying the fatal and non-fatal impacts of the oil spill on the species. The petition does note that apex predators can bioaccumulate toxic chemicals that they ingest from their prey, but does not provide information on the amount of toxic substances from prey that the global population or the NW Atlantic population is absorbing, or how much this threat is a cause for concern in relation to extinction risk.

The WEG petition notes that the oil ''has degraded sea grass habitat south of Chandeleur Island a known nursery for a number of shark species'' but does not identify if this location is a known nursery ground for the dusky shark. Neither the reference (CBD, undated) nor information in our files (NMFS, 2009) indicates that this is a nursery area for dusky sharks.

Global Population Analysis

In terms of other threats to the habitat of the global population of dusky sharks, the WEG petition cites a general statement about the rate of development in the United States and abroad, and the resultant destructive impact on coastal habitat (Camhi *et al.,* 1998), but does not provide any details on how this development is destroying specific dusky shark habitat or contributing to its extinction risk. Broad statements about generalized threats to the species do not constitute substantial information indicating that listing under the ESA may be warranted.

Factor A Conclusion

We conclude that the information presented in the WEG petition on threats from the modification of habitat does not provide substantial information indicating that listing is warranted for the global population or NW Atlantic population. However, we acknowledge that although there is no specific information at this time on the effects of the oil spill on the NW Atlantic population, the petition did reference a study (Hueter and Gelsleichter, 2010) that is currently looking at the sub-lethal impacts of oil exposure, with dusky sharks listed as a target species. We may re-examine this factor as new information becomes available. The NRDC petition did not identify habitat modification or destruction as a threat to the NW Atlantic population.

Factor B: Overutilization for Commercial, Recreational, Scientific, or Educational Purposes

NW Atlantic Population Analysis

The WEG petition presents information on threats from commercial and recreational overexploitation for the global population and the NW Atlantic population separately. However, in discussing the ''domestic'' commercial and recreational exploitation of the global population, the petition focuses entirely on information concerning the NW Atlantic population. In this section, the petition states ''The dusky shark is subject to overfishing domestically . . . throughout its range, including in the NWA/GOM [NW Atlantic] and Pacific'' and references the latest Southeast Data, Assessment, and Review (SEDAR) stock assessment report for the dusky shark (henceforth referred to as ''SEDAR 21'') (SEDAR, 2011). However, this statement is incorrect, as SEDAR 21 did not examine the status of the entire dusky shark population or the Pacific population of dusky sharks, only the Northwest Atlantic and Gulf of Mexico stock.

Information from the petitions suggests that the primary threat to the

NW Atlantic population is from fishing pressure by commercial and recreational fisheries. Dusky sharks off the U.S. East Coast have been a prohibited species in U.S. Atlantic Highly Migratory Species (HMS) fisheries since 2000 (NMFS, 1999), meaning that neither U.S. commercial nor recreational fishers are allowed to legally land this species. However, according to the results from SEDAR 21, the stock is still overfished with overfishing occurring. This suggests that the species continues to be caught as bycatch in pelagic and bottom longline fisheries and/or is misidentified by recreational and commercial fishers and seafood dealers, with other sharks recorded as dusky shark in landings, log books and dealer reports (Cortés *et al.,* 2006; NMFS, 2012a). Historically, the fishing mortality of this population was estimated to be low from 1960 through the early 1980s, but was thought to have increased to unsustainably high levels in the 1990s, before declining following the prohibition of dusky landings in 2000 (SEDAR, 2011). In the 2006 stock assessment for the Northwest Atlantic and Gulf of Mexico dusky shark population, it was estimated that the stock (in 2004) had suffered significant declines from its virgin population size (in 1960) (Cortés *et al.,* 2006). Three forms of Bayesian surplus production models predicted depletions of over 80 percent, an age-structured production model estimated a decline of 62–80 percent, and a catch-free age-structure production model estimated a decrease in the spawning stock biomass (SSB) of 92–93 percent (Cortés *et al.,* 2006; SEDAR, 2011). The stock assessment also found statistically significant decreasing trends in the average weight of the catch, suggesting that the majority of dusky sharks being caught were immature and that the stock was heavily exploited (Cortés *et al.,* 2006). Given the historically heavy fishing on this population, and its low productivity and hence high vulnerability to exploitation, the stock assessment projected that the Northwest Atlantic and Gulf of Mexico population required 100 to 400 years to rebuild (Cortés *et al.,* 2006; SEDAR, 2011). Based on these results, NMFS declared the dusky shark stock in the Northwest Atlantic and Gulf of Mexico to be overfished with overfishing occurring (71 FR 65087; November 7, 2006) and established a rebuilding plan in July 2008. In 2011, the status of the Northwest Atlantic and Gulf of Mexico stock was re-evaluated through the SEDAR process (76 FR 62331; October 7, 2011), with results that indicate this dusky shark population is still overfished and continues to experience overfishing, even though harvest of the species is prohibited (SEDAR, 2011).

The NRDC petition contends that although SEDAR 21 determined that the stock is experiencing overfishing, the current fishing mortality (F) values calculated by SEDAR 21 are underestimations and therefore ''the percent reduction needed to end overfishing (a 36 percent reduction) as well as rebuild the fishery (62 percent) are underestimated.'' SEDAR 21 selected a range of 44.2—65 percent as the discard mortality for dusky sharks caught by bottom longline (BLL) gear (SEDAR, 2011). The petition states that these estimates ''represent average values across age classes and are substantially lower than capture mortality rates of juvenile dusky sharks, a major source of bycatch'' and references Morgan and Burgess (2007) and Romine *et al.* (2009). These two papers present at-vessel mortality rates for different age groups of dusky sharks on BLL gear. Morgan and Burgess (2007) estimated an 87.7 percent mortality rate for young dusky sharks (0–100 cm fork length, FL) and an 82.4 percent mortality rate for juveniles (101–231 cm FL). Romine *et al.* (2009) estimated mortality rates that ranged between 69 and 79 percent for dusky sharks < 230 cm FL. These higher rates may suggest that juveniles are more susceptible to at-vessel mortality on BLL gear than previously assumed, with subsequent discards perhaps underestimated in SEDAR 21.

Furthermore, the NRDC petition references the SEDAR 21 results that show additional declines (relative to the virgin (1960) population) in biomass and SSB between the 2006 and 2011 assessments (SEDAR, 2011). SEDAR 21 suggested that the declines in SSB can be attributed to decreasing numbers of older, heavier, sharks, but is partially compensated for by increases in pup survival (i.e., density dependent recruitment) as the abundance of dusky sharks (in numbers) has increased from 2004 to 2009 (SEDAR, 2011). However, the petition contends that the ''significant impacts of continuing fishing pressures—and fishing-related mortality—on juvenile dusky sharks'' and their late age at sexual maturity (hence, the long time needed to survive before reproducing) makes this scenario unlikely unless current fishing mortality is reduced.

The NRDC petition also provides information on bycatch of NW Atlantic dusky sharks in U.S. commercial fisheries, and references NMFS U.S. National Bycatch Report for data in 2005 and 2006 (NMFS, 2011). The report estimates that 2,739 sharks were caught as bycatch on reef fish handline and BLL gear, and 570,896 live pounds (lbs) (258,954 kg) in the shark BLL fishery, but notes that the shark BLL estimates are currently being reviewed. In addition, the petition states that the recreational fishery has accounted for around 47 percent of the total catch of dusky sharks (from 2001–2009) even though harvest of this species has been prohibited since 2001. Although total catch has decreased substantially since before the ban (by around 85 percent), dusky sharks are still being caught in both the recreational and commercial fisheries, and under the current fishing mortality rate, the stock has only an 11 percent probability of recovery by 2480 (400 years) (SEDAR, 2011; NMFS, 2012a).

The fishery management terms ''overfishing'' and ''overfished,'' and targets such as ''rebuilding'' and ''recovery,'' are defined under the Magnuson-Stevens Fishery Conservation and Management Act (MSA) and are based on different criteria than threatened or endangered statuses under the ESA. As such, they do not necessarily indicate that a species may warrant listing under the ESA because they do not necessarily have any relationship to a species' extinction risk. Overutilization under the ESA means that a species has been or is being harvested at levels that pose a risk of extinction. In other words, the species is being harvested faster than it can replace itself. Since 1960 (assumed pre-fishing levels), the dusky shark biomass and SSB have declined by approximately 80 and 85 percent, respectively, and, as the petition notes, dusky sharks are inherently vulnerable to overexploitation due to their life history characteristics, with a ''very low natural intrinsic rate of population increase, one of the lowest intrinsic rebound potentials and lowest productivities of all sharks.'' Given this biological vulnerability (Cortés *et al.,* 2012), the significant population decline, and the fact that this population is still experiencing fishing pressure from both commercial and recreational fishers with no change in its status despite fishing prohibitions, overutilization by commercial and/or recreational fisheries may present a threat that warrants further exploration to see if it is contributing to the Northwest Atlantic population's risk of extinction that is cause for concern.

Factor B Conclusion for NW Atlantic Population

We conclude that the information presented in the petitions and information from our files indicates that the petitioned action to list the NW Atlantic population may be warranted due to threats from overutilization by commercial and/or recreational fisheries.

Global Population Analysis

In terms of threats of overexploitation on the global population, the petitions reference the international shark fin trade as contributing to the decline of the dusky shark. The WEG petition cites Musick *et al.* (2007) when it states that the dusky shark represents at least 1.2—1.7 percent of the fins auctioned in Hong Kong, the world's largest fin trading center. However, in the original study that produced those estimates (Clarke *et al.,* 2006a), the authors noted that the dusky shark had the ''least reliable results'' (referring to the above percentage proportions in the Hong Kong fin market) because the genetic primer used to identify shark fin species did not differentiate between dusky and Galapagos sharks (Clarke *et al.,* 2006a). Thus, the authors caution that the percentage estimates of 1.2 to 1.7 ''most likely overestimates this species' proportion in the trade'' (Clarke *et al.,* 2006a). In addition, the WEG petition incorrectly cites Musick *et al.* (2007) claiming that ''between 144,000 and 767,000 dusky sharks are represented in the shark fin trade each year or, in biomass, 6,000 to 30,000 million tons.'' The biomass numbers are in metric tons, not million tons (i.e., 6,000 mt to 30,000 mt) (Musick *et al.* 2007; Clarke *et al.,* 2006b); however, the petitions do not provide substantial evidence to indicate how these numbers relate to the global population size or data to indicate that the global population is in decline.

Because dusky sharks have large fins with high fin needle content (a gelatinous product used to make shark fin soup), they fetch a high commercial price in the Asian shark fin trade (Clarke *et al.,* 2006a) and thus are more likely to be kept when incidentally caught (Musick *et al.,* 2007). Again, the petitions do not provide information on how the abundance and biomass of dusky sharks that are removed for the shark fin trade compare to global population numbers or biomass of dusky sharks, or how it subsequently translates to extinction risk. The WEG petition asserts that ''studies suggest the dusky shark globally suffered a 64 92 percent decline in virgin biomass by 2004'' but references SEDAR 21, which only calculated declines for the Northwest Atlantic and Gulf of Mexico population, not the global population (SEDAR, 2011). The petition provides no information regarding the notion that equivalent declines are found elsewhere throughout the dusky shark range.

For information on dusky shark abundance elsewhere in the world (i.e., not the NW Atlantic population), the WEG petition acknowledges that there are little available data. It provides information on fisheries that may land dusky sharks and the types of fishing gear used, but does not provide information on the status of these populations or any past or present numbers of the species in these areas. The WEG petition notes that in the Southwest Atlantic there are ''little population data'' but that the shark is taken both directly and indirectly by pelagic longline (PLL) and artisanal fisheries operating in these waters. However, the petition does not provide any data, such as catch or landings data, to show how these fisheries are threats to the dusky shark global population or how they contribute to its extinction risk, nor do we have that information in our files. The WEG petition states that in the Mediterranean, again, that there are ''little data available on population trends'' with the IUCN deeming the population ''data deficient.'' Although the petition states that ''Nevertheless, there are numerous accounts of dusky sharks taken as both target and bycatch along the North African and Sicilian coasts . . . unsustainably,'' the reference the WEG uses to support this statement actually states that the species is not frequently caught in this area (''caught sporadically in . . . fisheries, principally off North Africa and rather less frequently by [other fisheries] in the Sicilian Channel . . . and rarely observed on fishmarkets in the Mediterranean'') (Musick *et al.,* 2007). Neither the petition, nor its reference, provides any information on catch numbers or evidence that take of dusky sharks is unsustainable or cause for concern.

For the population found off the Australian coast, the WEG petition states that ''Fisheries in Australian . . . waters have historically exploited dusky shark recreationally and continue to do so'' and mentions the use of demersal gillnets to target neonates and dusky sharks less than 3 years of age, capturing ''18–28 percent of the population in its first year.'' The reference for these statements is Musick *et al.* (2007) which provides information from a stock assessment (Simpfendorfer, 1999) and also cites McAuley *et al.* (2005) as a second assessment of the dusky shark population found off southwestern Australia. We could not verify the publication title of the McAuley *et al.* (2005) citation because the bibliography for the Musick *et al.* (2007) publication was not included by the petitioner, nor is this full reference included in the bibliography for the Musick *et al.* (2009) publication (which appears to be an updated version of the Musick *et al.* (2007) publication). We consider the second assessment for the dusky shark population found off southwestern Australia to be the McAuley *et al.* (2007) publication, which was also cited by the petitioner. It should also be noted that the fishery described by Musick *et al.* (2007) as using demersal gillnets is a commercial fishery, not a recreational fishery.

According to the stock assessments, neonate and juvenile *C. obscurus* have been the primary targets of the demersal gillnet fishery operating off southwestern Australia since the 1970s (Simpfendorfer, 1999; McAuley *et al.,* 2007). Due to the selectivity of the gillnet mesh sizes used in the fishery, very few dusky sharks older than 4 years are caught (Simpfendorfer, 1999), but these older individuals are also largely immune to exploitation because their distribution tends to be outside of the fishery's operational area (McAuley *et al.,* 2007). Historically, catches of dusky sharks in this fishery grew from under 100 mt per year in the late 1970s to just under 600 mt in 1998/1999 before fishery management restrictions reduced and stabilized the catch at around 300 mt per year (McAuley *et al.,* 2007).

Both assessments used demographic models to estimate the impacts of fishing mortality on the shark stock, and specifically examined the 1994 and 1995 cohorts. According to the Simpfendorfer (1999) assessment, the rates of fishing mortality experienced by the 1994 and 1995 cohorts were sustainable. In fact, Simpfendorfer (1999) estimated that up to 4.3 percent of each class could be sustainably harvested each year, or, in presenting a scenario of unequal exploitation distribution, estimated that up to 64.6 percent of the youngest age-class could be removed without decreasing the population, as long as no other age-class was harvested. McAuley *et al.* (2007) presented an update to this assessment using revised biological parameters and age-specific rates of fishing mortality. Results from McAuley *et al.* (2007) confirm the sustainability of the rates of fishing mortality experienced by the 1994 and 1995 dusky shark cohorts, but suggest that the 4.3 percent exploitation may be overly optimistic for older dusky

sharks. Instead, the assessment found that exploitation above 1 percent per year on dusky sharks older than 10 years had a 55 percent probability of resulting in a decline in the stock (McAuley *et al.,* 2007). As such, the authors attribute the declining trend in catch rates in the target demersal gillnet fishery to the unquantified, yet probable, harvest of older sharks outside of the fishery, resulting in fewer breeders and thus fewer recruits to the population.

However, in 2006, the Western Australian Government implemented a number of fishery management restrictions for its commercial fisheries, with the purpose of reducing mortality, particularly of dusky and sandbar sharks, and achieving dusky shark target biomass levels of 40 percent of the virgin biomass by 2040 (Musick *et al.,* 2007; Musick *et al.,* 2009). One of these measures involved setting a maximum size limit for dusky sharks (Musick *et al.,* 2007; Musick *et al.,* 2009), thereby protecting the stock breeding biomass from being harvested by fisheries outside of the demersal gillnet fishery. According to the reference cited by the petitioner, ''These management measures should arrest further declines'' and encourages continued monitoring of the stock (Musick *et al.,* 2007). Thus, given the results of the stock assessments that show sustainable fishing mortality on the heavily targeted dusky neonates, and current regulations that arrest the harvest of the more sensitive older shark population, we do not find evidence that suggests overutilization of the dusky shark population off western Australia is a threat to the existence of the global dusky shark population.

In the Indian Ocean, the WEG petition states that the dusky shark is mainly taken as bycatch in PLL tuna fisheries gear, but also by small commercial fisheries and recreational long-line and gillnet fishing. It also states that beach meshing is used to catch juveniles and adolescents. It does not provide details on any past or present numbers in this region; however, it references a study by Dudley *et al.* (2005), which analyzed catch rate and size frequency of dusky sharks caught in protective beach nets off the coast of South Africa. The results from this study showed no significant linear trend in catch rate over the period of 1978 to 1999 (Dudley *et al.,* 2005). The authors of the study also mentioned that group catches of dusky sharks usually coincided with the annual ''sardine run,'' with size and catch distribution influenced by the attempts to remove the nets before the influx of sardine shoals (Dudley *et al.,* 2005; Musick *et al.,* 2007). In a follow-up study that looked at more recent years of catch per unit effort (CPUE) information (extending the dataset from 1978 to 2003), the authors came to the same conclusion: the dusky shark did not show any indications of population decline, the CPUE trend was stable (Dudley and Simpfendorfer, 2006).

In terms of other types of indirect catch of the global population of dusky sharks, the WEG petition makes generalized statements about sharks comprising a high percentage of non-target bycatch in commercial fisheries targeting swordfish and tuna in the Southwest Atlantic. However, the petition does not provide this percentage, nor does it or the reference used as support (Mandelman *et al.,* 2008), provide information on how much of this bycatch in the Southwest Atlantic can be attributed to dusky sharks. In fact, the reference only examines historical catches of the Northwest Atlantic and Gulf of Mexico dusky shark population, excluding catch records from the Caribbean and areas farther south (Mandelman *et al.,* 2008). The WEG petition then proceeds to list countries that operate PLL vessels in the South Atlantic and mentions different types of fisheries operating in the Mediterranean and Indian Ocean that may also catch dusky sharks as bycatch. However, it fails to provide any information on the actual catch numbers, catch or population trends, past or present numbers of dusky sharks in this region, or information on how these fisheries contribute to the extinction risk of the global population of dusky sharks. The WEG petition also provides a figure of the distribution of hooks deployed by all International Commission for the Conservation of Atlantic Tunas (ICCAT) parties from 2000–2006 but does not explain the relevance of the figure in relation to dusky shark catches or overutilization of the global dusky shark population.

For recreational catch, the WEG petition follows the same pattern of describing the type of fishing gear used to catch dusky sharks. However, it fails to provide substantial information on numbers, population trends, or support for how recreational fisheries may be contributing to the extinction risk of the global dusky shark population.

Factor B Conclusion for Global Population

Broad statements about generalized threats to the species, or identification of factors that could negatively impact a species, such as being a target of fisheries or caught on specific fishing gear, do not constitute substantial information indicating that listing may be warranted. With the exception of the NW Atlantic, the petitioners do not provide information on catch rates, landings, population trends, abundance numbers, or other information indicating that the global dusky shark may be responding in a negative fashion to fisheries or specific fishing gear. Because the petitioners have failed to provide substantial information that the NW Atlantic population constitutes a significant portion of the global population's range, we conclude that the information presented in the petitions on threats from overutilization does not provide substantial information indicating that listing may be warranted for the global population.

Factor D: Inadequacy of Existing Regulatory Mechanisms

NW Atlantic Population Analysis

The petitions assert that the inadequacy of existing Federal, state, or international regulatory mechanisms require that the dusky shark be listed under the ESA. As noted above, the dusky sharks off the U.S East Coast were classified as a prohibited species in the 1999 NMFS Fishery Management Plan (FMP) for Atlantic Tunas, Swordfish and Sharks (NMFS, 1999). In 2003, Amendment 1 to this FMP established a Mid-Atlantic shark closure in part to protect dusky sharks (NMFS, 2003). Beginning in January 2005, NMFS closed this Mid-Atlantic area to bottom longline fishing from January 1 through July 31 of every year, partially due to reports of high catches and mortality rates of dusky sharks on bottom longline gear in this area (NMFS, 2012a). After the 2006 stock assessment found the Northwest Atlantic and Gulf of Mexico dusky shark population to be overfished with overfishing occurring (Cortés *et al.,* 2006), we established a rebuilding plan for this stock in July 2008, with Amendment 2 to the Consolidated Atlantic HMS FMP (NMFS, 2007). This amendment focused on minimizing the bycatch of dusky sharks by: reducing the overall retention limits of non-sandbar large coastal shark species, no longer allowing the species to be collected under display permits, and prohibiting similar-looking species from being retained by the recreational fishery. Although SEDAR 21 still determined the dusky shark stock to be overfished and experiencing overfishing in 2011, it concluded that the prohibition on dusky shark catch in 2000 has been an effective management tool in decreasing fishing mortality rates (F). Specifically, SEDAR 21 estimated that F has decreased by 11 percent from

2000 (F = 0.385) to 2009 (F = 0.056). However, even with this decrease in F, SEDAR 21 calculated that the stock has only an 11 percent probability of rebuilding by 2408 (400 years). This does not necessarily imply that the stock will go extinct. Dusky sharks do have inherently low population growth rates with no fishing pressure, and there is evidence that the species is still being caught by both commercial and recreational fisheries (NMFS, 2011b; NMFS, 2012a; NMFS 2012b). Despite the fact that existing regulations have prohibited harvest of this species, these factors may be cause for concern in regard to its extinction risk.

As required under the MSA, we must implement additional conservation and management measures to rebuild the overfished dusky shark stock, and, as such, have proposed management measures that are expected to have a 70 percent probability of rebuilding the stock by 2099 (November 26, 2012; 77 FR 70552). The comment period for these proposed measures ended on February 12, 2013, and, after reviewing the comments, we announced that we would reconsider the proposed measures in a separate future action. We felt this was necessary to explore different approaches for ending overfishing and rebuilding dusky sharks, and fully consider and address public comments. Thus, because management measures are still in the process of being determined, we cannot comment on their likelihood of being effective in minimizing the species' extinction risk at this time.

Factor D Conclusion for NW Atlantic Population

Therefore, we conclude that the petitions, and information from our files, indicate that the petitioned action may be warranted for the NW Atlantic population as current regulatory mechanisms may not be adequate to protect the NW Atlantic population from extinction risk.

Global Population Analysis

For international regulations, the WEG petition mentions some of the international conservation agreements and plans to protect sharks, such as the Food and Agriculture Organization of the United Nations (FAO) International Plan of Action for the Conservation and Management of Sharks, but states that these measures are only voluntary. The petition presents no information regarding compliance with the voluntary measures or the impact of any non-compliance on the global dusky shark population. The WEG petition also mentions that ''individual countries such as Australia have made minor adjustments to their dusky shark quotas in the wake of depletion, but there is no evidence that these management measures have staved off decline of individual populations'' and cites Musick *et al.* (2007) and NMFS's 2010 Shark Finning Report to Congress (NMFS, 2010). As mentioned previously, Musick *et al.* (2007) references an assessment of the dusky shark population off southwestern Australia that found the stock was more susceptible to overfishing than previously thought; however, the authors also note that since 2006, the Western Australian Government has implemented additional management measures in all commercial fisheries, such as maximum size limits to protect older dusky sharks, which ''should arrest further declines'' of the dusky shark population (Musick *et al.,* 2007). The NMFS 2010 Shark Finning Report to Congress concluded that ''great strides continue to be made in shark conservation, data gathering, management, research, and education on a national and global scale that will contribute to sustainable management of sharks'' (NMFS, 2010). Although perhaps more regulations are needed for the conservation of all shark species in general, the WEG petition does not provide substantial evidence to support the assertion that current regulatory mechanisms are insufficient to prevent the endangerment or extinction of the global dusky shark population.

The WEG petition notes that finning regulations are ''generally inadequate'' for protecting the global dusky shark population because they may still be caught either directly or indirectly. It acknowledges that finning ''contributes to a very high mortality rate for this species'' and stresses that finning is ''now a major factor in the commercial exploitation of sharks worldwide,'' suggesting it is a threat to the global population of dusky sharks. Finning regulations are a common form of shark management regulation and have been adopted by far more countries and regional fishery management organizations than the petition lists (see HSI, 2012). In addition, a number of countries have also enacted complete shark fishing bans, with the Bahamas, Marshall Islands, Honduras, Sabah (Malaysia), and Tokelau (an island territory of New Zealand) adding to the list in 2011, and the Cook Islands in 2012. Shark sanctuaries can also be found in the Eastern Tropical Pacific Seascape (which encompasses around 2,000,000 km^2 and includes the Galapagos, Cocos, and Malpelo Islands), in waters off the Maldives, Mauritania, Palau, and French Polynesia. Countries that prohibit the sale or trade of shark fins or products include the Bahamas, CNMI, American Samoa, Cook Islands, Egypt, French Polynesia, Guam, Republic of Marshall Islands, and Sabah. Additionally, many cities in Canada also prohibit the sale or trade of shark fins/products; thus, providing further international protection for the global dusky shark population. The WEG petition also mentions that lack of Convention on International Trade in Endangered Species of Wild Fauna and Flora (CITES) protections (specifically an Appendix II listing) and international reporting requirements makes ESA-listing more urgent and ''exacerbates the paucity of international regulation of by-catch.'' Although a CITES Appendix II listing or international reporting requirements would provide better data on the global catch and trade of dusky sharks, the lack of listing or requirements would not suggest that current regulatory mechanisms are inadequate to protect the global dusky shark population from extinction.

Factor D Conclusion for Global Population

Other than the information presented for the NW Atlantic population, neither the information in the petitions, nor information in our files, suggest that the global dusky shark population is at risk of extinction from the inadequacy of existing regulatory mechanisms. Because the petitions do not present substantial evidence that the NW Atlantic population constitutes a significant portion of the dusky shark's range, we conclude that the petitions do not present substantial information on threats from the inadequacy of existing regulatory mechanisms that would indicate that listing may be warranted for the global population.

Factor E: Other Natural or Manmade Factors

NW Atlantic Population Analysis

The petitions contend that ''biological vulnerability'' in the form of slow growth rates, late maturity, and shorter reproductive cycles make the species particularly vulnerable to overfishing and slow to recover. In an ecological risk assessment, Cortés *et al.* (2012) assessed 20 shark stocks caught in association with Atlantic PLL fisheries and estimated their productivity values and susceptibility to the fishery. The authors then considered those values to come up with an overall vulnerability ranking, which was defined as ''a measure of the extent to which the

impact of a fishery [Atlantic PLL] on a species will exceed its biological ability to renew itself'' (Cortés *et al.,* 2012). Out of the 20 assessed shark stocks, the Northwest Atlantic dusky shark population ranked 6th in lowest median productivity value (r = 0.043) but 17th in susceptibility to the Atlantic PLL fishery (indicating low susceptibility) (Cortés *et al.,* 2012). However, depending on the method used to calculate the vulnerability ranking, dusky sharks ranged from being at a low (17th) to high (6th) risk from Atlantic PLL fisheries (vulnerability rankings = 6th, 12th, and 17th) (Cortés *et al.,* 2012). On bottom longline fisheries, information in the petition and in our files shows that the species suffers high mortality from incidental capture (Morgan and Burgess, 2007; Romine *et al.* 2009).

Factor E Conclusion for NW Atlantic Population

We conclude that the information in the petition and in our files suggests that biological vulnerability of the species may be a threat to the NW Atlantic population as this population is already severely depleted and still experiencing levels of fishing pressure that may be of concern. Thus, its high observed at-vessel fishing mortality and low productivity may hinder the success of ongoing and future recovery efforts.

Global Population Analysis

In addition to biological vulnerability, the WEG petition asserts that natal homing, geographic preferences, and misidentification of fins makes the dusky shark particularly vulnerable to overfishing, and that pollution may lead to a population collapse, but does not provide specific or substantial information on the current or likely future effects of these factors on the extinction risk of the global dusky shark population.

Factor E Conclusion for Global Population

Other than the information presented in the petition and in our files regarding Factor E with respect to the NW Atlantic population, the petition provides only broad general assertions regarding the impact of other natural or manmade factors to the global population. Because the information in the petitions in combination with the information in our files do not present substantial information indicating that the NW Atlantic population constitutes a significant portion of the species' range, we conclude that the information presented in the petitions and in our files is insufficient to indicate that there has been or may be any negative effect on the global dusky shark's ability to recover due to pollution impacts, misidentification rates, global warming, or other biological or ecological vulnerability factors.

Summary of Section 4(a)(1) Factors

We conclude that the petitions do not present substantial scientific or commercial information indicating that any of the section (4)(a)(1) factors may be causing or contributing to an increased risk of extinction for the global population of dusky sharks. However, we also conclude that the petitions present substantial scientific or commercial information indicating that a combination of three of the section 4(a)(1) factors: overutilization for commercial, recreational, scientific, or educational purposes; inadequate existing regulatory mechanisms; and other natural or manmade factors may be causing or contributing to an increased risk of extinction for the NW Atlantic population of dusky sharks.

Petition Finding

Global Population

After reviewing the information contained in the petition, as well as information readily available in our files, and based on the above analysis, we conclude that the petitions do not present substantial scientific or commercial information indicating that the petitioned action may be warranted for the global population.

NW Atlantic Population

We conclude that the petitions present substantial scientific information indicating the petitioned action of listing the NW Atlantic population of dusky sharks as threatened or endangered may be warranted. Therefore, in accordance with section 4(b)(3)(B) of the ESA and NMFS' implementing regulations (50 CFR 424.14(b)(2)), we will commence a status review of the NW Atlantic population. During the status review, we will determine whether the population identified by the petitioners meets the DPS policy's criteria, and if so, whether the population is in danger of extinction (endangered) or likely to become so within the foreseeable future (threatened) throughout all or a significant portion of its range. We now initiate this review, and thus, the NW Atlantic dusky shark is considered to be a candidate species (69 FR 19975; April 15, 2004). Within 12 months of the receipt of the petition (November 14, 2012), we will make a finding as to whether listing the species as endangered or threatened is warranted as required by section 4(b)(3)(B) of the ESA. If listing the species is found to be warranted, we will publish a proposed rule and solicit public comments before developing and publishing a final rule.

Information Solicited

To ensure that the status review is based on the best available scientific and commercial data, we are soliciting information relevant to whether the NW Atlantic population of dusky sharks is a DPS and whether it is threatened or endangered. Specifically, we are soliciting information, including unpublished information, in the following areas: (1) The discreteness, as defined in the DPS Policy, of the NW Atlantic population; (2) the significance, as defined in the DPS Policy, of the NW Atlantic population; (3) historical and current distribution and abundance of this population throughout its range; (4) historical and current population trends; (5) life history in NW Atlantic and Gulf of Mexico waters; (6) at-vessel and post-release mortality rates of dusky sharks on different types of fishing gears; (7) historical and current data on dusky shark bycatch and retention in commercial and recreational fisheries in the NW Atlantic and Gulf of Mexico waters; (8) historical and current data on dusky shark discards in commercial and recreational fisheries in the NW Atlantic and Gulf of Mexico waters; (9) data on the trade of NW Atlantic dusky shark products, including fins, jaws, and teeth; (10) any current or planned activities that may adversely impact the species; (11) ongoing or planned efforts to protect and restore the population and its habitat; (12) population structure information, such as genetics data; and (13) management, regulatory, and enforcement information. We request that all information be accompanied by: (1) Supporting documentation such as maps, bibliographic references, or reprints of pertinent publications; and (2) the submitter's name, address, and any association, institution, or business that the person represents.

References Cited

A complete list of references is available upon request from NMFS Protected Resources Headquarters Office (see **ADDRESSES**).

Authority

The authority for this action is the Endangered Species Act of 1973, as amended (16 U.S.C. 1531 *et seq.*).

Dated: May 13, 2013.

Alan D. Risenhoover,

Director, Office of Sustainable Fisheries, performing the functions and duties of the Deputy Assistant Administrator for Regulatory Programs, National Marine Fisheries Service.

[FR Doc. 2013–11862 Filed 5–16–13; 8:45 am]

BILLING CODE 3510–22–P

Notices

Federal Register
Vol. 78, No. 96
Friday, May 17, 2013

This section of the FEDERAL REGISTER contains documents other than rules or proposed rules that are applicable to the public. Notices of hearings and investigations, committee meetings, agency decisions and rulings, delegations of authority, filing of petitions and applications and agency statements of organization and functions are examples of documents appearing in this section.

DEPARTMENT OF AGRICULTURE

Submission for OMB Review; Comment Request

May 13, 2013.

The Department of Agriculture has submitted the following information collection requirement(s) to OMB for review and clearance under the Paperwork Reduction Act of 1995, Public Law 104–13. Comments regarding (a) Whether the collection of information is necessary for the proper performance of the functions of the agency, including whether the information will have practical utility; (b) the accuracy of the agency's estimate of burden including the validity of the methodology and assumptions used; (c) ways to enhance the quality, utility and clarity of the information to be collected; (d) ways to minimize the burden of the collection of information on those who are to respond, including through the use of appropriate automated, electronic, mechanical, or other technological collection techniques or other forms of information technology should be addressed to: Desk Officer for Agriculture, Office of Information and Regulatory Affairs, Office of Management and Budget (OMB), New Executive Office Building, 725–17th Street NW., Washington, DC 20502. Commenters are encouraged to submit their comments to OMB via email to: *OIRA_Submission@omb.eop.gov* or fax (202) 395–5806 and to Departmental Clearance Office, USDA, OCIO, Mail Stop 7602, Washington, DC 20250–7602. Comments regarding these information collections are best assured of having their full effect if received by June 17, 2013. Copies of the submission(s) may be obtained by calling (202) 720–8681.

An agency may not conduct or sponsor a collection of information unless the collection of information displays a currently valid OMB control number and the agency informs potential persons who are to respond to the collection of information that such persons are not required to respond to the collection of information unless it displays a currently valid OMB control number.

Rural Housing Service

Title: 7 CFR 1924–F, Complaints and Compensation Defects.

OMB Control Number: 0575–0082.

Summary of Collection: Section 509C of Title V of the Housing Act of 1949, as amended, authorizes the Rural Housing Service (RHS) to pay the costs for correcting defects or compensate borrowers of Section 502 Direct loan funds for expenses arising out of defects with respect to newly constructed dwellings and new manufactured housing units with authorized funds. This regulation provides instruction to all RHS personnel to enable them to implement a procedure to accept and process complaints from borrowers/owners against builders and dealers/contractors, to resolve the complaint informally. When the complaint involves structural defects which cannot be resolved by the cooperation of the builder or dealer/contractor, it authorizes expenditure to resolve the defect with grant funds. Resolution could involve expenditure for (1) Repairing defects; (2) reimbursing for emergency repairs; (3) pay temporary living expenses or (4) convey dwelling to RHS with release of liability for the RHS loan.

Need and Use of the Information: The information is collected from agency borrowers and the local agency office serving the county in which the dwelling is located. This information is used by Rural Housing Staff to evaluate the request and assist the borrower in identifying possible causes and corrective actions. The information is collected on a case-by-case basis when initiated by the borrower. Without this information, RHS would be unable to assure that eligible borrowers would receive compensation to repair defects to their newly constructed dwellings.

Description of Respondents: Business or for-profit.

Number of Respondents: 200.

Frequency of Responses: Reporting: On occasion.

Total Burden Hours: 80.

Charlene Parker,
Departmental Information Collection Clearance Officer.

[FR Doc. 2013–11810 Filed 5–16–13; 8:45 am]

BILLING CODE 3410–XV–P

DEPARTMENT OF AGRICULTURE

Agricultural Marketing Service

[Doc. # AMS–CN–13–0034]

Notice of Meeting of Advisory Committee on Universal Cotton Standards

AGENCY: Agricultural Marketing Service, USDA.

ACTION: Notice of public meeting.

SUMMARY: In accordance with the Federal Advisory Committee Act, as amended, (5 U.S.C. App.), the Agricultural Marketing Service (AMS) is announcing an upcoming meeting of the Advisory Committee on Universal Cotton Standards (Committee). The Committee is being convened to recommend to the Secretary of Agriculture any changes considered necessary to the Universal Cotton Standards and to review freshly prepared sets of Universal Cotton Standards for conformity with existing standards.

DATES: The meeting dates are June 19–21, 2013. The meeting will convene on Wednesday, June 19th, from 1:00 p.m. to 3:30 p.m. On Thursday, June 20, the meeting will continue from 9:00 a.m. to 5:00 p.m., and on Friday, June 21st meetings will take place from 9:00 a.m. until the completion of the review. The deadline to submit written public comments is June 11, 2013.

ADDRESSES: The June 19th meeting will take place at the Raleigh Marriott Crabtree Valley, 4500 Marriott Drive, Raleigh, North Carolina 27612. Meetings will re-convene on the morning of June 20th at the Raleigh Marriott Crabtree Valley before relocating to the offices of Cotton Incorporated, 6399 Weston Parkway, Cary, North Carolina 27513 in the afternoon. On the morning of June 21st, meetings re-convene at the offices of Cotton Incorporated. Information and instructions pertaining to the meeting are posted at the following Web address: *http://www.ams.usda.gov/AMSv1.0/*

AdvisoryCommitteeonUniversal Standards.

FOR FURTHER INFORMATION CONTACT: James Knowlton, Standardization and Engineering Division, Cotton and Tobacco Programs, AMS, USDA, 3275 Appling Road, Memphis, Tennessee 38133; Phone: (901) 384–3030; Fax (901) 384–3032; Email: *james.knowlton@ams.usda.gov*.

SUPPLEMENTARY INFORMATION: The Advisory Committee on Universal Cotton Standards includes representatives of all segments of the U.S. cotton industry and the 22 international associations that are signatories to the Universal Cotton Standards Agreement, which is authorized under the United States Cotton Standards Act (U.S.C. 51–65). The purpose of these meetings is: (1) To recommend to the Secretary of Agriculture any changes considered necessary to the Universal Standards; and (2) to review freshly prepared sets of Universal Cotton Standards for conformity with existing standards.

The meeting will be open to the public. The meeting agenda for June 19th includes presentations of proposed standard for High Volume Instrument (HVI) trash measurements and amendments to the Universal Cotton Standards Agreement. A formal meeting of the Committee will take place on the morning of June 20th, and presentations by invited speakers will be made and formal committee action will take place. On the afternoon of June 20th, committee members will review the 1986 original set and reserve sets of standard guide boxes for authenticity. New standard guide boxes will then be matched and approved on June 21st. The final meeting agenda may be viewed at *http://www.ams.usda.gov/AMSv1.0/AdvisoryCommitteeon UniversalStandards* on June 18, 2013.

Public Comments: Written comments for the Committee's consideration will be accepted through Tuesday, June 11, 2013 via *www.regulations.gov*. Comments received after that date may not be reviewed by the Committee before the meeting. AMS strongly prefers comments to be submitted electronically; however, written comments may also be submitted by Tuesday, June 11, 2013 via mail to Mr. James Knowlton, Standardization and Engineering Division, Cotton and Tobacco Programs, AMS, USDA, 3275 Appling Road, Memphis, Tennessee 38133. Instructions for viewing all comments are posted at *www.regulations.gov*.

Meeting Accommodations: The meeting hotel and Cotton Incorporated Offices are ADA compliant, and the USDA provides reasonable accommodation to individuals with disabilities where appropriate. If you need a reasonable accommodation to participate in this public meeting, please notify James Knowlton at *james.knowlton@ams.usda.gov* or (901) 384–3030. Determinations for reasonable accommodation will be made on a case-by-case basis.

Dated: May 14, 2013.

Rex A. Barnes,

Associate Administrator, Agricultural Marketing Service.

[FR Doc. 2013–11822 Filed 5–16–13; 8:45 am]

BILLING CODE 3410–02–P

DEPARTMENT OF AGRICULTURE

Forest Service

Hiawatha East Resource Advisory Committee

AGENCY: Forest Service, USDA.

ACTION: Notice of meetings.

SUMMARY: The Hiawatha East Resource Advisory Committee (Committee) will meet in Kincheloe, Michigan. The Committee is meeting as authorized under the Secure Rural Schools and Community Self-Determination Act of 2000 (the Act) (Pub. L. 112–141) and in compliance with the Federal Advisory Committee Act (FACA) (Pub. L. 92–463). The purpose of the Committee is to improve collaborative relationships and to provide advice and recommendations to the Forest Service concerning projects and funding consistent with Title II of the Act. The meetings are open to the public. The purpose of the meetings is to review and recommend projects authorized under Title II of the Act.

DATES: The meetings will be held Tuesday, May 30, 2013; Thursday, June 20, 2013; Thursday, July 11, 2013; Thursday, August 15, 2013; and Thursday, September 19, 2013. All meetings will begin at 6:00 p.m. (EST).

ADDRESSES: The meetings will be held at the Chippewa County 911 Center, 4657 West Industrial Park Drive, Kincheloe, Michigan 49788. Written comments may be submitted as described under Supplementary Information. All comments, including names and addresses when provided, are placed in the record and are available for public inspection and copying. The public may inspect comments received at the Hiawatha National Forest, 820 Rains Drive, Gladstone, Michigan 49837. Please call ahead at (906) 428–5829 to facilitate entry into the building to view comments.

FOR FURTHER INFORMATION CONTACT: Janel Crooks, RAC Coordinator, USDA Forest Service, Hiawatha National Forest, 820 Rains Drive, Gladstone, Michigan 49837; (906) 428–5829; email *HiawathaNF@fs.fed.us*. Individuals who use telecommunication devices for the deaf (TDD) may call the Federal Information Relay Service (FIRS) at 1–800–877–8339 between 8:00 a.m. and 8:00 p.m., Eastern Standard Time, Monday through Friday.

SUPPLEMENTARY INFORMATION: The following business will be conducted: Update regarding implementation of 2008–2011 Projects; Update on the Secure Rural Schools 2012 Update; Review and discussion of proposals for 2012; and Public Comment. Individuals who wish to bring related matters to the attention of the Committee may file written statements with the Committee staff before or after the meeting. The agenda will include time for people to make oral statements of three minutes or less. Individuals wishing to make an oral statement should request in writing no later than two weeks prior to the meeting, to be scheduled on the agenda. Written comments and requests for time for oral comments must be sent to Hiawatha National Forest; Attn: RAC Coordinator; 820 Rains Drive, Gladstone, MI 49837, or by email to *HiawathaNF@fs.fed.us* or via facsimile to (906) 428–9030. A summary of the meetings will be posted at *https://fsplaces.fs.fed.us/fsfiles/unit/wo/secure_rural_schools.nsf/Web_Agendas?OpenView&Count=1000&RestrictToCategory=Hiawatha+East+Resource+Advisory+Committee* within 21 days of the meeting.

Meeting Accommodations: If you are a person requiring reasonable accomodation, please make requests in advance for sign language interpreting, assistive listening devices or other reasonable accomodation for access to the facility or procedings by contacting the person listed under **FOR FURTHER INFORMATION CONTACT**. All reasonable accommodation requests are managed on a case by case basis.

Dated: May 10, 2013.

Stevan J. Christiansen,

Designated Federal Officer.

[FR Doc. 2013–11768 Filed 5–16–13; 8:45 am]

BILLING CODE 3410–11–P

DEPARTMENT OF COMMERCE

Submission for OMB Review; Comment Request

The Department of Commerce has submitted to the Office of Management and Budget (OMB) for clearance the following proposal for collection of information under the emergency provisions of the Paperwork Reduction Act (44 U.S.C. Chapter 35).

Agency: National Telecommunications and Information Administration (NTIA).

Title: Computer and Internet Use Supplement to the Census Bureau's Current Population Survey.

OMB Control Number: 0660–0021.

Form Number(s): None.

Type of Request: Emergency submission (revision of a currently approved information collection).

Number of Respondents: 40,500.

Average Hours per Response: 10 minutes.

Burden Hours: 6,750.

Needs and Uses: President Obama has established a national goal of universal, affordable broadband access for all Americans. To that end, the Administration is working with Congress, the Federal Communications Commission (FCC), and other stakeholders to develop and advance economic and regulatory policies that foster broadband deployment and adoption. Current, systematic, and comprehensive data on broadband adoption and non-use by U.S. households is critical to allow policymakers not only to gauge progress made to date, but also to identify problem areas with a specificity that permits carefully targeted and cost effective responses.

NTIA proposes to add 53 questions in the Computer and Internet Use Supplement to the U.S. Census Bureau's July 2013 Current Population Survey (CPS) to gather reliable data on broadband (also known as high-speed Internet) use by U.S. households. These questions clarify certain previously used questions, and update others to reflect rapidly changing broadband device technology and the many consumer and business activities that broadband enables. The emergency review by OMB will expedite the inclusion of the questions to the CPS.

Affected Public: Individuals or households.

Frequency: Once.

Respondent's Obligation: Voluntary.

Copies of the above information collection proposal can be obtained by calling or writing Jennifer Jessup, Departmental Paperwork Clearance Officer, (202) 482–0336, Department of Commerce, Room 6616, 14th and Constitution Avenue NW., Washington, DC 20230 (or via the Internet at *JJessup@doc.gov*).

Written comments and recommendations for the proposed information collection should be sent by June 14, 2013 to Nicholas Fraser, OMB Desk Officer, via the Internet at *Nicholas_A._Fraser@omb.eop.gov* or FAX number (202) 395–5167.

Dated: May 14, 2013.

Gwellnar Banks,

Management Analyst, Office of the Chief Information Officer.

[FR Doc. 2013–11795 Filed 5–16–13; 8:45 am]

BILLING CODE 3510–06–P

DEPARTMENT OF COMMERCE

Foreign-Trade Zones Board

[Order No. 1898]

Reorganization of Foreign-Trade Zone 241 Under Alternative Site Framework, Fort Lauderdale, Florida

Correction

In notice document 2013–11203 appearing on pages 27364–27365 in the issue of Friday, May 10, 2013, make the following correction:

On page 27365, in the first column, in the thirty-first line, ''May'' should read ''April''.

[FR Doc. C1–2013–11203 Filed 5–16–13; 8:45 am]

BILLING CODE 1505–01–D

DEPARTMENT OF COMMERCE

International Trade Administration

[A–580–836]

Certain Cut-to-Length Carbon-Quality Steel Plate Products From the Republic of Korea: Final Results of Antidumping Duty Administrative Review; 2011–2012

AGENCY: Import Administration, International Trade Administration, Department of Commerce.

SUMMARY: On January 22, 2013, the Department of Commerce published the preliminary results of the administrative review of the antidumping duty order on certain cut-to-length carbon-quality steel plate products from the Republic of Korea. For these final results, we continue to find that subject merchandise has not been sold at less than normal value.

DATES: *Effective Date:* May 17, 2013.

FOR FURTHER INFORMATION CONTACT: Yang Jin Chun, AD/CVD Operations Office 1, Import Administration, International Trade Administration, U.S. Department of Commerce, 14th Street and Constitution Avenue NW., Washington, DC 20230; telephone: (202) 482–5760.

SUPPLEMENTARY INFORMATION:

Background

On January 22, 2013, the Department of Commerce (the Department) published the preliminary results of the administrative review of the antidumping duty order on certain cut-to-length carbon-quality steel plate products from the Republic of Korea (Korea).[1] The period of review is February 1, 2011, through January 31, 2012.

We invited interested parties to comment on the *Preliminary Results* and received a case brief from Nucor Corporation and a rebuttal brief from Dongkuk Steel Mill Co., Ltd.

The Department has conducted this administrative review in accordance with section 751 of the Tariff Act of 1930, as amended (the Act).

Scope of the Order

The products covered by the antidumping duty order are certain cut-to-length plate. For a full description of the scope of the order, *see* the Issues and Decision Memorandum,[2] which is hereby adopted by this notice. The written description is dispositive.

Analysis of Comments Received

The comments received in the case and rebuttal briefs are addressed in the Issues and Decision Memorandum. The Issues and Decision Memorandum is a public document and is on file electronically *via* Import Administration's Antidumping and Countervailing Duty Centralized Electronic Service System (IA ACCESS). Access to IA ACCESS is available to registered users at *http://iaaccess.trade.gov* and in the Central Records Unit (CRU), Room 7046 of the main Department of Commerce building. In addition, a complete version of the Issues and Decision

[1] *See Certain Cut-to-Length Carbon-Quality Steel Plate Products From the Republic of Korea: Preliminary Results of Antidumping Duty Administrative Review; 2011–2012,* 78 FR 4385 (January 22, 2013) (*Preliminary Results*).

[2] *See* the memorandum to Paul Piquado, Assistant Secretary for Import Administration, from Gary Taverman, Senior Advisor for Antidumping and Countervailing Duty Operations, entitled ''Issues and Decision Memorandum for the Antidumping Duty Administrative Review of Certain Cut-to-Length Carbon-Quality Steel Plate Products from the Republic of Korea for the Period of Review February 1, 2011, through January 31, 2012'' dated concurrently with this notice (Issues and Decision Memorandum).

Memorandum can be accessed directly on the internet at *http://www.trade.gov/ia/.* The signed Issues and Decision Memorandum and the electronic versions of the Issues and Decision Memorandum are identical in content.

Final Results of Review

For the final results of this review, we determine that the following weighted-average dumping margins exist for the period February 1, 2011, through January 31, 2012.

Manufacturer/exporter	Weighted-average dumping margin (percent)
Dongkuk Steel Mill Co., Ltd.	0.00
Samsung C&T Corp.	0.00
TCC Steel Corp.	0.00

Assessment Rates

Pursuant to section 751(a)(2)(A) of the Act and 19 CFR 351.212(b), the Department will determine, and U.S. Customs and Border Protection (CBP) shall assess, antidumping duties on all appropriate entries of subject merchandise in accordance with the final results of this review. With respect to the respondents for which the weighted-average dumping margin is zero or *de minimis,* or an importer-specific assessment rate is zero or *de minimis,* we will instruct CBP to liquidate any entries without regard to antidumping duties.[3]

The Department clarified its ''automatic assessment'' regulation on May 6, 2003. This clarification will apply to entries of subject merchandise during the POR produced by Dongkuk Steel Mill Co., Ltd., which is the company selected for individual examination in this review, for which it did not know its merchandise was destined for the United States. In such instances, we will instruct CBP to liquidate unreviewed entries at the all-others rate if there is no rate for the intermediate company(ies) involved in the transaction. For a full discussion of this clarification, *see Antidumping and Countervailing Duty Proceedings: Assessment of Antidumping Duties,* 68 FR 23954 (May 6, 2003) (*May 2003 Clarification*).

Consistent with the *May 2003 Clarification,* for Daewoo International Corp., Dongbu Steel Co., Ltd., GS Global Corp., and Hyundai Steel Co., which had no reviewable entries of subject merchandise to the United States, we will instruct CBP to liquidate any applicable entries of subject merchandise at the all-others rate.

We intend to issue liquidation instructions to CBP 15 days after publication of the final results of this review.

Cash Deposit Requirements

The following deposit requirements will be effective upon publication of the notice of final results of administrative review for all shipments of certain cut-to-length carbon-quality steel plate products from Korea entered, or withdrawn from warehouse, for consumption on or after the date of publication as provided by section 751(a)(2) of the Act: (1) No cash deposit will be required for companies which received the rate of zero percent in the final results of this administrative review; (2) for merchandise exported by manufacturers or exporters not covered in this review but covered in a prior segment of the proceeding, the cash deposit rate will continue to be the company-specific rate published for the most recent period; (3) if the exporter is not a firm covered in this review, a prior review, or the original investigation but the manufacturer is, the cash deposit rate will be the rate established for the most recent period for the manufacturer of the merchandise; (4) the cash deposit rate for all other manufacturers or exporters will continue to be 0.98 percent,[4] the all-others rate established in the less-than-fair-value investigation, adjusted for the export-subsidy rate in the companion countervailing duty investigation. These cash deposit requirements, when imposed, shall remain in effect until further notice.

Notifications

This notice serves as a final reminder to importers of their responsibility under 19 CFR 351.402(f)(2) to file a certificate regarding the reimbursement of antidumping duties prior to liquidation of the relevant entries during this review period. Failure to comply with this requirement could result in the Department's presumption that reimbursement of antidumping duties occurred and the subsequent assessment of doubled antidumping duties.

This notice also serves as a reminder to parties subject to administrative protective order (APO) of their responsibility concerning the disposition of proprietary information disclosed under APO in accordance with 19 CFR 351.305(a)(3). Timely notification of the destruction of APO materials or conversion to judicial protective order is hereby requested. Failure to comply with the regulations and the terms of an APO is a sanctionable violation.

These final results of administrative review are issued and published in accordance with sections 751(a)(1) and 777(i)(1) of the Act.

Dated: May 13, 2013.

Paul Piquado,

Assistant Secretary for Import Administration.

[FR Doc. 2013–11888 Filed 5–16–13; 8:45 am]

BILLING CODE 3510–DS–P

[3] In these final results, the Department applied the assessment rate calculation method adopted in *Antidumping Proceedings: Calculation of the Weighted-Average Dumping Margin and Assessment Rate in Certain Antidumping Duty Proceedings; Final Modification,* 77 FR 8101 (February 14, 2012), *i.e.,* on the basis of monthly average-to-average comparisons using only the transactions associated with that importer with offsets being provided for non-dumped comparisons.

[4] *See, e.g., Certain Cut-to-Length Carbon-Quality Steel Plate Products From the Republic of Korea: Final Results of Antidumping Duty Administrative Review,* 77 FR 21527, 21529 (April 10, 2012).

DEPARTMENT OF COMMERCE

National Oceanic and Atmospheric Administration

RIN 0648–XC667

Endangered Species; File No. 17304

AGENCY: National Marine Fisheries Service (NMFS), National Oceanic and Atmospheric Administration (NOAA), Commerce.

ACTION: Notice; receipt of application.

SUMMARY: Notice is hereby given that Kristen Hart, Ph.D., U.S. Geological Survey, has applied in due form for a permit to take loggerhead (*Caretta caretta*), hawksbill (*Eretmochelys imbricata*), Kemp's ridley (*Lepidochelys kempii*), and green (*Chelonia mydas*) sea turtles for purposes of scientific research.

DATES: Written, telefaxed, or email comments must be received on or before June 17, 2013.

ADDRESSES: The application and related documents are available for review by selecting ''Records Open for Public Comment'' from the *Features* box on the Applications and Permits for Protected Species (APPS) home page, *https://apps.nmfs.noaa.gov,* and then selecting File No. 17304 from the list of available applications.

These documents are also available upon written request or by appointment in the following offices:

Permits and Conservation Division, Office of Protected Resources, NMFS, 1315 East-West Highway, Room 13705, Silver Spring, MD 20910; phone (301) 427–8401; fax (301) 713–0376; and

Southeast Region, NMFS, 263 13th Avenue South, Saint Petersburg, FL 33701; phone (727) 824–5312; fax (727) 824–5309.

Written comments on this application should be submitted to the Chief, Permits and Conservation Division

- by email to *NMFS.Pr1Comments@noaa.gov* (include the File No. in the subject line of the email),
- by facsimile to (301) 713–0376, or
- at the address listed above.

Those individuals requesting a public hearing should submit a written request to the Chief, Permits and Conservation Division at the address listed above. The request should set forth the specific reasons why a hearing on this application would be appropriate.

FOR FURTHER INFORMATION CONTACT: Amy Hapeman or Rosa L. González, (301)427–8401.

SUPPLEMENTARY INFORMATION: The subject permit is requested under the authority of the Endangered Species Act of 1973, as amended (ESA; 16 U.S.C. 1531 *et seq.*) and the regulations governing the taking, importing, and exporting of endangered and threatened species (50 CFR parts 222–226).

The applicant requests a five-year research permit to determine distribution, seasonal movements, vital rates and habitat use of sub-adult, juvenile, and adult green, loggerhead, Kemp's ridley, and hawksbill sea turtles in the northern Gulf of Mexico. Researchers would capture sea turtles by hand or using nets or obtain sea turtles from relocation trawlers and perform the following procedures before release: measure, remove epibiota, carapace mark, photograph/video, flipper and passive integrated transponder tag, weigh, skin, fecal, scute and blood sample, lavage, track, and/or attach up to three transmitters on 100 green, 100 loggerhead, 100 Kemp's ridley, and 20 hawksbill sea turtles annually.

Dated: May 14, 2013.

P. Michael Payne,

Chief, Permits and Conservation Division, Office of Protected Resources, National Marine Fisheries Service.

[FR Doc. 2013–11774 Filed 5–16–13; 8:45 am]

BILLING CODE 3510–22–P

DEPARTMENT OF COMMERCE

National Oceanic and Atmospheric Administration

RIN 0648–XC677

North Pacific Fishery Management Council; Public Meetings; Correction

AGENCY: National Marine Fisheries Service (NMFS), National Oceanic and Atmospheric Administration (NOAA), Commerce.

ACTION: Notice of public meetings; correction.

SUMMARY: The North Pacific Fishery Management Council (Council) and its advisory committees will hold public meetings, June 3–11, 2013 at the Centennial Hall, 101 Egan Drive, Juneau, AK. This document is making the public aware of all of the issues being discussed at the council plenary session. An additional issue is being added to agenda item 7, under the heading ''Council Plenary Session''. The original notice published on May 10, 2013, will not be repeated here and all other text in the original notice remains unchanged.

DATES: The Council will begin its plenary session at 8 a.m. on Wednesday, June 5, continuing through Tuesday, June 11, 2013. All meetings are open to the public, except executive sessions.

ADDRESSES: The Council meeting will be held at Centennial Hall, 101 Egan Drive, Juneau, AK.

Council address: North Pacific Fishery Management Council, 605 W. 4th Avenue, Suite 306, Anchorage, AK 99501–2252.

FOR FURTHER INFORMATION CONTACT: David Witherell, Council staff; telephone: (907) 271–2809.

SUPPLEMENTARY INFORMATION: Although non-emergency issues not contained in this agenda may come before these groups for discussion, those issues may not be the subject of formal action during these meetings. Action will be restricted to those issues specifically listed in this notice and any issues arising after publication of this notice that require emergency action under section 305(c) of the Magnuson-Stevens Fishery Conservation and Management Act, provided the public has been notified of the Council's intent to take final action to address the emergency.

Special Accommodations

These meetings are physically accessible to people with disabilities. Requests for sign language interpretation or other auxiliary aids should be directed to Gail Bendixen at (907) 271–2809 at least 7 working days prior to the meeting date.

Correction

In the **Federal Register** of May 10, 2013, in FR Doc. 2013–11155, on page 27366, in the third column, agenda item 7, under the heading ''Council Plenary Session'' is corrected to read as follows:

Council Plenary Session:

7. Limited Access Privilege Programs (LAPPs) Cost Recovery: Council recommendation on cost recovery programs for American Fishery Act (AFA), Amendment 80, Community Development Quota (CDQ) groundfish/halibut LAPPs, and Freezer Longline Cooperatives.

Dated: May 14, 2013.

Tracey L. Thompson,

Acting Deputy Director, Office of Sustainable Fisheries, National Marine Fisheries Service.

[FR Doc. 2013–11764 Filed 5–16–13; 8:45 am]

BILLING CODE 3510–22–P

DEPARTMENT OF COMMERCE

National Oceanic and Atmospheric Administration

RIN 0648–XC663

Pacific Fishery Management Council; Public Meeting

AGENCY: National Marine Fisheries Service (NMFS), National Oceanic and Atmospheric Administration (NOAA), Commerce.

ACTION: Notice of public meeting.

SUMMARY: The Pacific Fishery Management Council's (Pacific Council) ad hoc South of Humbug Pacific Halibut Workgroup (Workgroup) will hold a webinar to review analysis of recreational management measures designed to reduce Pacific halibut catch in southern Oregon and northern California (i.e., south of Humbug Mountain).

DATES: The webinar will be held Wednesday, June 12, 2013 from 9 a.m. until business for the day has been completed.

ADDRESSES: The meeting will be held via webinar. To attend the Workgroup meeting, please reserve your seat by visiting *https://www2.gotomeeting.com/register/557684818.* If requested, enter your name, email address, and the webinar ID, which is 557684818. Once registered, participants will receive a confirmation email message that contains detailed audio and viewing information about the event. To only join the audio teleconference of the webinar from the U.S. or Canada, call

the toll number +1 (909) 259–0023 (note: this is not a toll-free number) and use the access code 959–411–833 when prompted.

Council address: Pacific Fishery Management Council, 7700 NE Ambassador Place, Suite 101, Portland, OR 97220–1384.

FOR FURTHER INFORMATION CONTACT: Ms. Kelly Ames, Staff Officer, Pacific Council; telephone: (503) 820–2280.

SUPPLEMENTARY INFORMATION: The objective of the meeting is to review analysis of management measures, which are designed to reduce catch of Pacific halibut in southern Oregon and northern California (i.e., south of Humbug Mountain). The Workgroup is tentatively scheduled to report their findings to the Pacific Council at their September 2013 meeting in Boise, ID.

Although non-emergency issues not contained in the meeting agenda may come before the Workgroup for discussion, those issues may not be the subject of formal Workgroup action during this meeting. Workgroup action will be restricted to those issues specifically listed in this notice and any issues arising after publication of this notice that require emergency action under section 305(c) of the Magnuson-Stevens Fishery Conservation and Management Act, provided the public has been notified of the Workgroup's intent to take final action to address the emergency.

Special Accommodations

This meeting is physically accessible to people with disabilities. Requests for sign language interpretation or other auxiliary aids should be directed to Mr. Kris Kleinschmidt at (503) 820–2280 at least 5 days prior to the meeting date.

Dated: May 14, 2013.

Tracey L. Thompson,

Acting Deputy Director, Office of Sustainable Fisheries, National Marine Fisheries Service.

[FR Doc. 2013–11787 Filed 5–16–13; 8:45 am]

BILLING CODE 3510–22–P

DEPARTMENT OF COMMERCE

National Oceanic and Atmospheric Administration

RIN 0645–XC688

New England Fishery Management Council; Public Meeting

AGENCY: National Marine Fisheries Service (NMFS), National Oceanic and Atmospheric Administration (NOAA), Commerce.

ACTION: Notice; public meeting.

SUMMARY: The New England Fishery Management Council's (Council) Vessel Monitoring System (VMS)/Enforcement will meet jointly with the Advisory Panel to consider actions affecting New England fisheries in the exclusive economic zone (EEZ).

DATES: The meeting will be held on Wednesday, June 5, 2013 at 8:30 a.m.

ADDRESSES: The meeting will be held at the Holiday Inn, One Newbury Street, Route 1, Peabody, MA 01960; telephone: (978) 535–4600; fax: (978) 535–8238.

Council address: New England Fishery Management Council, 50 Water Street, Mill 2, Newburyport, MA 01950.

FOR FURTHER INFORMATION CONTACT: Thomas A. Nies, Executive Director, New England Fishery Management Council; telephone: (978) 465–0492.

SUPPLEMENTARY INFORMATION: The items of discussion in the committee's agenda are as follows:

The VMS/Enforcement Committee and Advisory Panel will meet to make recommendations about the enforceability of Groundfish-Habitat closed area alternatives under development. They also will review a revised Enforcement policy proposed by OLE/GCES/USCG and discuss hidden compartments on fishing vessels. Other business may be discussed as necessary.

Although non-emergency issues not contained in this agenda may come before this group for discussion, those issues may not be the subject of formal action during this meeting. Action will be restricted to those issues specifically identified in this notice and any issues arising after publication of this notice that require emergency action under section 305(c) of the Magnuson-Stevens Fishery Conservation and Management Act, provided the public has been notified of the Council's intent to take final action to address the emergency.

Special Accommodations

This meeting is physically accessible to people with disabilities. Requests for sign language interpretation or other auxiliary aids should be directed to Thomas A. Nies (see **ADDRESSES**) at least 5 days prior to the meeting date.

Authority: 16 U.S.C. 1801 *et seq.*

Dated: May 14, 2013.

Tracey L. Thompson,

Acting Deputy Director, Office of Sustainable Fisheries, National Marine Fisheries Service.

[FR Doc. 2013–11793 Filed 5–16–13; 8:45 am]

BILLING CODE 3510–22–P

DEPARTMENT OF COMMERCE

National Oceanic and Atmospheric Administration

RIN 0648–XC680

Gulf of Mexico Fishery Management Council; Public Meeting; Correction

AGENCY: National Marine Fisheries Service (NMFS), National Oceanic and Atmospheric Administration (NOAA), Commerce.

ACTION: Council to convene a public meeting; correction.

SUMMARY: The Gulf of Mexico Fishery Management Council will convene a meeting of the Standing, Special Mackerel and Special Reef Fish Scientific and Statistical Committees.

DATES: The meeting will convene at 8:30 a.m. on Wednesday, May 29, 2013 and conclude by 12 p.m. Friday, May 31, 2013.

FOR FURTHER INFORMATION CONTACT: Steven Atran, Population Dynamics Statistician; Gulf of Mexico Fishery Management Council; telephone: (813) 348–1630.

SUPPLEMENTARY INFORMATION:

Need for Correction

The original meeting was published at 78 FR 27365, May 10, 2013, omitted the full name of one Scientific and Statistical Committee. This document has made this correction in the **SUMMARY**. All other information in the original is correct and will not be repeated here.

Dated: May 14, 2013.

Tracey L. Thompson,

Acting Deputy Director, Office of Sustainable Fisheries, National Marine Fisheries Service.

[FR Doc. 2013–11794 Filed 5–16–13; 8:45 am]

BILLING CODE 3510–22–P

DEPARTMENT OF COMMERCE

National Oceanic and Atmospheric Administration

RIN 0648–XC679

North Pacific Fishery Management Council; Public Meeting

AGENCY: National Marine Fisheries Service (NMFS), National Oceanic and Atmospheric Administration (NOAA), Commerce.

ACTION: Meeting of the North Pacific Fishery Management Council (Council) and Alaska Board of Fisheries (AK BOF) Joint Protocol Committee.

SUMMARY: The North Pacific Fishery Management Council Joint Protocol

Committee of the AK B0F and Council will meet in Juneau, AK.

DATES: The meeting will be held on June 12, 2013, from 9 a.m. to 5 p.m.

ADDRESSES: The meeting will be held at the Centennial Hall, 101 Egan Drive, Ballroom 1, Juneau, AK.

Council address: North Pacific Fishery Management Council, 605 W. 4th Ave., Suite 306, Anchorage, AK 99501–2252.

FOR FURTHER INFORMATION CONTACT: AK BOF Staff, (907) 465–4110 or Council staff, (907) 271–2809.

SUPPLEMENTARY INFORMATION: The Committee will review the following: Updates on Gulf of Alaska (GOA) non-pollock Chinook bycatch and other salmon bycatch issues, GOA trawl bycatch management, restructured observer program and electronic monitoring, Steller sea lion (SSL) Environmental Impact Statement (EIS) and associated issues, including Aleutian Islands cod processing sideboards and relationship to BOF state water groundfish fishery proposals; Update on definition of a fishing guide and coordination of state and federal regulations and report on Pacific cod and other groundfish proposals to the BOF. The Agenda is subject to change, and the latest version will be posted at *http://www.alaskafisheries.noaa.gov/npfmc/.*

Although non-emergency issues not contained in this agenda may come before this group for discussion, those issues may not be the subject of formal action during this meeting. Action will be restricted to those issues specifically listed in this notice and any issues arising after publication of this notice that require emergency action under section 305(c) of the Magnuson-Stevens Fishery Conservation and Management Act, provided the public has been notified of the Council's intent to take final action to address the emergency.

Special Accommodations

The meeting is physically accessible to people with disabilities. Requests for sign language interpretation or other auxiliary aids should be directed to Gail Bendixen at (907) 271–2809 at least 7 working days prior to the meeting date.

Dated: May 14, 2013.

Tracey L. Thompson,

Acting Deputy Director, Office of Sustainable Fisheries, National Marine Fisheries Service.

[FR Doc. 2013–11788 Filed 5–16–13; 8:45 am]

BILLING CODE 3510–22–P

DEPARTMENT OF COMMERCE

National Oceanic and Atmospheric Administration

RIN 0648–XC439

Marine Mammals; File No. 17005

AGENCY: National Marine Fisheries Service (NMFS), National Oceanic and Atmospheric Administration (NOAA), Commerce.

ACTION: Notice; issuance of permit.

SUMMARY: Notice is hereby given that a permit has been issued to Peter Rogers, Ph.D., Georgia Institute of Technology, Woodruff School of Mechanical Engineering, Atlanta, GA 30332 to conduct research on cetacean species not listed under the Endangered Species Act (ESA).

ADDRESSES: The permit and related documents are available for review upon written request or by appointment in the following offices: See **SUPPLEMENTARY INFORMATION.**

FOR FURTHER INFORMATION CONTACT: Amy Hapeman or Amy Sloan, (301) 427–8401.

SUPPLEMENTARY INFORMATION: On January 15, 2013, notice was published in the **Federal Register** (78 FR 2956) that a request for a permit to conduct research on non-listed cetacean species had been submitted by the above-named applicant. The requested permit has been issued under the authority of the Marine Mammal Protection Act of 1972, as amended (16 U.S.C. 1361 *et seq.*), and the regulations governing the taking and importing of marine mammals (50 CFR part 216).

In cooperation with local marine mammal stranding networks, Dr. Rogers is authorized to conduct scientific research on non-listed cetacean species in Atlantic and Pacific coastal areas of the contiguous United States. Researchers may use a non-invasive ultrasound-based system to determine the low frequency elastic properties of cetacean head tissues. The work also would allow researchers to: (1) Determine any short term changes in soft tissue elasticity if an animal dies during the stranding response, and (2) assess differences between intact and harvested tissues from deceased stranded animals. The permit is valid through May 10, 2018.

In compliance with the National Environmental Policy Act of 1969 (42 U.S.C. 4321 *et seq.*), a final determination has been made that the activity proposed is categorically excluded from the requirement to prepare an environmental assessment or environmental impact statement.

Documents may be reviewed in the following locations:

Permits and Conservation Division, Office of Protected Resources, NMFS, 1315 East-West Highway, Room 13705, Silver Spring, MD 20910; phone (301) 427–8401; fax (301) 713–0376;

Northwest Region, NMFS, 7600 Sand Point Way NE., BIN C15700, Bldg. 1, Seattle, WA 98115–0700; phone (206) 526–6150; fax (206) 526–6426;

Southwest Region, NMFS, 501 West Ocean Blvd., Suite 4200, Long Beach, CA 90802–4213; phone (562) 980–4001; fax (562) 980–4018;

Northeast Region, NMFS, 55 Great Republic Drive, Gloucester, MA 01930; phone (978) 281–9328; fax (978) 281–9394; and

Southeast Region, NMFS, 263 13th Avenue South, Saint Petersburg, FL 33701; phone (727) 824–5312; fax (727) 824–5309.

Dated: May 14, 2013.

P. Michael Payne,

Chief, Permits and Conservation Division, Office of Protected Resources, National Marine Fisheries Service.

[FR Doc. 2013–11773 Filed 5–16–13; 8:45 am]

BILLING CODE 3510–22–P

DEPARTMENT OF COMMERCE

United States Patent and Trademark Office

[Docket No. PTO–P–2013–0013]

After Final Consideration Pilot Program 2.0

AGENCY: United States Patent and Trademark Office, Commerce.

ACTION: Notice.

SUMMARY: The United States Patent and Trademark Office (USPTO) has modified the After Final Consideration Pilot Program (AFCP) to create the After Final Consideration Pilot Program 2.0 (AFCP 2.0). Applicants who wish to participate in AFCP 2.0 must file a request to have a response after final rejection (which the examiner may have sufficient basis not to consider under current practice) considered by the examiner without reopening prosecution. The response after final rejection must include an amendment to at least one independent claim. The examiner will be allotted a set amount of time under AFCP 2.0 to consider the response. If the examiner's consideration of a proper AFCP 2.0 request and response does not result in a determination that all pending claims are in condition for allowance, the examiner will request an interview with the applicant to discuss the response.

There are thus three main differences between AFCP and AFCP 2.0: an applicant must request to participate in AFCP 2.0; a response after final rejection under AFCP 2.0 must include an amendment to at least one independent claim; and the examiner will request an interview with the applicant to discuss a response, if the response did not result in a determination that all pending claims are in condition for allowance. The goal of AFCP 2.0 is to reduce pendency by reducing the number of Requests for Continued Examination (RCE) and encouraging increased collaboration between the applicant and the examiner to effectively advance the prosecution of the application. There is no additional fee required to request consideration of an amendment after final rejection under AFCP 2.0, but any necessary existing fee, *e.g.,* the fee for an extension of time, must still be paid.

DATES: *Effective Date:* May 19, 2013.

Duration: AFCP 2.0 will run from its effective date until September 30, 2013. A request to consider an amendment after final rejection under AFCP 2.0 must be filed on or before September 30, 2013. The USPTO may extend AFCP 2.0 (with or without modifications) depending on feedback from the participants and the effectiveness of the pilot program.

FOR FURTHER INFORMATION CONTACT: Raul Tamayo, Senior Legal Advisor, Office of Patent Legal Administration, Office of the Deputy Commissioner for Patent Examination Policy, by telephone at (571) 272–7728, or by mail addressed to: Mail Stop Comments—Patents, Commissioner for Patents, P.O. Box 1450, Alexandria, VA 22313–1450.

SUPPLEMENTARY INFORMATION: As outlined herein, AFCP 2.0 involves responses filed after a final rejection pursuant to 37 CFR 1.116. Under current practice, examiners have sufficient basis not to consider many responses filed after a final rejection, including responses that would require further search and/or consideration. *See, e.g.,* sections 714.12 through 714.13 of the *Manual of Patent Examining Procedure* (8th ed. 2001) (Rev. 9, August 2012) (MPEP). AFCP 2.0 allots a limited amount of time for examiners to consider responses after final rejection that include an amendment to at least one independent claim and require further search and/or consideration. Examiners will also use the time allotted to them under AFCP 2.0 to conduct an interview to discuss the response, for those responses that do not place the application in condition for allowance. AFCP 2.0 will help inform the USPTO as to whether authorization of the limited amount of time will reduce the number of RCEs. AFCP 2.0 replaces AFCP, which terminates on May 18, 2013.

A. AFCP 2.0 Requirements

In order to be eligible to participate in AFCP 2.0, an application must contain an outstanding final rejection and be (i) an original utility, plant, or design nonprovisional application filed under 35 U.S.C. 111(a), or (ii) an international application that has entered the national stage in compliance with 35 U.S.C. 371(c). A continuing application (*e.g.,* a continuation or divisional application) is filed under 35 U.S.C. 111(a) and is thus eligible to participate in AFCP 2.0. Reissue applications and reexamination proceedings are not eligible to participate in AFCP 2.0.

A request for an examiner to consider an amendment after final rejection under AFCP 2.0 must include the following items: (1) A transmittal form, such as form PTO/SB/434, that identifies the submission as an AFCP 2.0 submission and requests consideration under AFCP 2.0; (2) a response under 37 CFR 1.116, including an amendment to at least one independent claim that does not broaden the scope of the independent claim in any aspect; (3) a statement that the applicant is willing and available to participate in any interview initiated by the examiner concerning the accompanying response; and (4) any necessary fees.

Only one request for consideration under AFCP 2.0 may be filed in response to an outstanding final rejection. Second or subsequent requests for consideration under AFCP 2.0 filed in response to the same outstanding final rejection will be processed consistent with current practice concerning responses after final rejection under 37 CFR 1.116. In addition, all papers associated with this pilot program must be filed via the USPTO's Electronic Filing System-Web (EFS–Web).

1. Transmittal Form

AFCP 2.0 requires applicants to specifically request consideration under the program. The USPTO has included this requirement in an effort to focus the program on applications that are more likely to benefit from the program. The requirement to request consideration should also improve the data generated on the effectiveness of the program. Applicants are advised to use form PTO/SB/434, which is available at *http://www.uspto.gov/forms/index.jsp,* to request consideration under AFCP 2.0. Use of this form will also help the Office to quickly identify AFCP 2.0 submissions and facilitate timely processing of such submissions. The Office of Management and Budget (OMB) has determined that, under 5 CFR1320.3(h), form PTO/SB/434 does not collect ''information'' within the meaning of the Paperwork Reduction Act of 1995.

2. Amendment

A submission under AFCP 2.0 must include a response filed under 37 CFR 1.116. The 37 CFR 1.116 response must include an amendment to at least one independent claim. The amendment may not broaden the scope of the independent claim in any aspect. For the purposes of AFCP 2.0, the analysis of whether an amendment to an independent claim impermissibly broadens the scope of the claim will be analogous to the guidance set forth in section 1412.03 of the MPEP for determining whether a reissue claim has been broadened.

3. Interview statement

A submission under AFCP 2.0 must include a statement by the applicant that they are willing and available to participate in any interview initiated by the examiner concerning the response filed with the AFCP submission. Form PTO/SB/434 includes the required interview statement.

4. Any Necessary Fees

A submission under AFCP 2.0 must also include any fees that would be necessary, consistent with current practice concerning an after final response under 37 CFR 1.116. For example, an AFCP 2.0 submission that is filed more than three months after the mailing of a final rejection must include the appropriate fee for an extension of time under 37 CFR 1.136(a).

B. Processing of AFCP 2.0 Submissions

Upon receipt of the AFCP 2.0 submission, the examiner will review the submission to ensure that the transmittal form, amendment, interview statement, and any necessary fees are provided. If the submission is incomplete, then the examiner will process the submission consistent with current practice concerning responses after final rejection under 37 CFR 1.116.

Upon verifying that the AFCP 2.0 submission complies with the requirements of the program, the examiner will perform an initial review of the amendment. During the initial review, the examiner will determine if additional search and/or consideration

would be required to determine whether the amendment would distinguish over the prior art, and if such search and/or consideration would be possible within the time allotted to them under the AFCP 2.0 program. If additional search and/or consideration would be required but could not be completed within the allotted time, the examiner will process the submission consistent with current practice concerning responses after final rejection under 37 CFR 1.116, *e.g.,* by mailing an advisory action.

If the examiner determines that the amendment does not necessitate additional search and/or consideration, or if the examiner determines that additional search and/or consideration is required and could be completed within the allotted time, then the examiner will consider whether the amendment places the application in condition for allowance (after completing the additional search and/or consideration, if required). If the examiner determines that the amendment places the application in condition for allowance, then the examiner will enter the amendment and mail a notice of allowance. If the examiner determines that the amendment does not appear to place the application in condition for allowance, then the examiner will contact the applicant to schedule an interview to discuss the amendment.

The interview will be conducted by the examiner, and if the examiner does not have negotiation authority, a primary examiner and/or supervisory patent examiner will also participate. Following the interview, the examiner will proceed with an appropriate response to the submission after final rejection according to current practice. If the applicant declines the interview, or is unable to schedule the interview within ten (10) calendar days from the date the examiner first contacts the applicant, then the examiner may proceed with an appropriate response to the submission after final rejection according to current practice.

Teresa Stanek Rea,

Acting Under Secretary of Commerce for Intellectual Property and Acting Director of the United States Patent and Trademark Office.

[FR Doc. 2013–11870 Filed 5–16–13; 8:45 am]

BILLING CODE 3510–16–P

COMMITTEE FOR PURCHASE FROM PEOPLE WHO ARE BLIND OR SEVERELY DISABLED

Procurement List; Additions and Deletion

AGENCY: Committee for Purchase From People Who Are Blind or Severely Disabled.

ACTION: Additions to and Deletion from the Procurement List.

SUMMARY: This action adds products and services to the Procurement List that will be furnished by nonprofit agencies employing persons who are blind or have other severe disabilities, and deletes a service from the Procurement List previously provided by such agency.

DATES: *Effective Date:* 6/17/2013.

ADDRESSES: Committee for Purchase From People Who Are Blind or Severely Disabled, 1401 S. Clark Street, Suite 10800, Arlington, Virginia 22202–4149.

FOR FURTHER INFORMATION CONTACT: Barry S. Lineback, Telephone: (703) 603–7740, Fax: (703) 603–0655, or email *CMTEFedReg@AbilityOne.gov*.

SUPPLEMENTARY INFORMATION:

Additions

On 3/15/2013 (78 FR 16475–16476) and 3/22/2013 (78 FR 17641–17642), the Committee for Purchase From People Who Are Blind or Severely Disabled published notices of proposed additions to the Procurement List.

After consideration of the material presented to it concerning capability of qualified nonprofit agencies to provide the products and services and impact of the additions on the current or most recent contractors, the Committee has determined that the products and services listed below are suitable for procurement by the Federal Government under 41 U.S.C. 8501–8506 and 41 CFR 51–2.4.

Regulatory Flexibility Act Certification

I certify that the following action will not have a significant impact on a substantial number of small entities. The major factors considered for this certification were:

1. The action will not result in any additional reporting, recordkeeping or other compliance requirements for small entities other than the small organizations that will furnish the products and services to the Government.

2. The action will result in authorizing small entities to furnish the products and services to the Government.

3. There are no known regulatory alternatives which would accomplish the objectives of the Javits-Wagner-O'Day Act (41 U.S.C. 8501–8506) in connection with the products and services proposed for addition to the Procurement List.

End of Certification

Accordingly, the following products and services are added to the Procurement List:

Products

NSN: MR 1147—Christmas Novelty Flag, Decorative, 28″ x 40″.
NPA: Winston-Salem Industries for the Blind, Inc., Winston-Salem, NC.
Contracting Activity: Defense Commissary Agency, Fort Lee, VA.
Coverage: C-List for the requirements of military commissaries and exchanges as aggregated by the Defense Commissary Agency.

NSN: 7510–01–389–2262—Self Stick Rectangular Flag, ''Sign Here'', 1.0″ x 1.75″, Yellow, 100 Flags per pack.
NPA: Association for the Blind and Visually Impaired—Goodwill Industries of Greater Rochester, Rochester, NY.
Contracting Activity: General Services Administration, New York, NY.
Coverage: A-List for the Total Government Requirement as aggregated by the General Services Administration.

Ice Melt/De-Icer

NSN: 6850–01–598–1946—10 lbs.
NSN: 6850–01–598–1926—20 lbs.
NSN: 6850–01–598–1933—40 lbs.
NPA: Bosma Industries for the Blind, Inc., Indianapolis, IN
Contracting Activity: Defense Logistics Agency Aviation, Richmond, VA
Coverage: B-List for the Total Government Requirement as aggregated by the Defense Logistics Agency Aviation, Richmond, VA.

Services

Service Type/Location: Landscaping Maintenance Service, Defense Contract Management Agency (DCMA), Buildings 10500, 10501, 10201 and 1024, 3901 A Avenue, Fort Lee, VA.
NPA: Richmond Area Association for Retarded Citizens, Richmond, VA.
Contracting Activity: Defense Contract Management Agency (DCMA), Fort Lee, VA.

Service Type/Location: Tactical Vehicle Wash Facility Service, Yano Tactical Vehicle Wash Facility, Directorate of Training Sustainment, Harmony Church, Building 5525, Fort Benning, GA.
NPA: Power Works Industries, Inc., Columbus, GA.
Contracting Activity: Dept of the Army, W6QM MICC-Ft Benning, Fort Benning, GA.

Service Type/Location: Grounds Maintenance and Snow Removal Service, Army Corps of Engineers District Headquarters Bldg., 201 North Third Ave., Walla Walla, WA.
NPA: Lillie Rice Center, Walla Walla, WA.

Contracting Activity: Dept of the Army, W071 Endist Walla Walla, Walla Walla, WA.

Service Type/Location: Operations Support Service, Defense Health Headquarters, 7700 Arlington Blvd., Falls Church, VA.

NPA: Linden Resources, Inc., Arlington, VA.

Contracting Activity: Washington Headquarters Services (WHS), Acquisition Directorate, Washington, DC.

Deletion

On 4/5/2013 (78 FR 20622–20623), the Committee for Purchase From People Who Are Blind or Severely Disabled published notice of proposed deletions from the Procurement List.

After consideration of the relevant matter presented, the Committee has determined that the service listed below is no longer suitable for procurement by the Federal Government under 41 U.S.C. 8501–8506 and 41 CFR 51–2.4.

Regulatory Flexibility Act Certification

I certify that the following action will not have a significant impact on a substantial number of small entities. The major factors considered for this certification were:

1. The action will not result in additional reporting, recordkeeping or other compliance requirements for small entities.

2. The action may result in authorizing a small entity to provide the service to the Government.

3. There are no known regulatory alternatives which would accomplish the objectives of the Javits-Wagner-O'Day Act (41 U.S.C. 8501–8506) in connection with the service deleted from the Procurement List.

End of Certification

Accordingly, the following service is deleted from the Procurement List:

Service

Service Type/Location: Janitorial/Custodial Service, U.S. Army Reserve Center: Wilkes-Barre, 1001 Highway 315, Wilkes-Barre, PA.

NPA: United Rehabilitation Services, Inc., Wilkes-Barre, PA.

Contracting Activity: Dept of the Army, W6QM MICC-Ft Dix (RC–E), Fort Dix, NJ.

Barry S. Lineback,

Director, Business Operations.

[FR Doc. 2013–11766 Filed 5–16–13; 8:45 am]

BILLING CODE 6353–01–P

DEPARTMENT OF DEFENSE

Notice of Intent (NOI) To Prepare an Environmental Impact Statement (EIS) for Proposed Establishment and Expansion of Military Airspace in Support of the Oregon Air National Guard (ORANG), Portland International Airport, Portland, and Kingsley Field, Klamath Falls, OR

AGENCY: Department of the Air Force; DOD.

ACTION: Notice of Intent.

SUMMARY: Pursuant to the National Environmental Policy Act (NEPA) of 1969, as amended (42 U.S.C. 4321, et seq.), the Council on Environmental Quality (CEQ) Regulations for Implementing the Procedural Provisions of NEPA (40 CFR parts 1500–1508), and Air Force policy and procedures (32 CFR part 989), the Air Force is issuing this notice to advise the public of its intent to prepare an Environmental Impact Statement (EIS) for the proposed establishment and expansion of Special Use Airspace over portions of Oregon and a small area over northwestern Nevada and southwestern Washington. The proposal would provide adequately sized and configured airspace within close proximity to ORANG flying units to support advanced 21st-century air-to-air tactical fighter technologies and current and evolving training mission requirements and ensure efficient and realistic mission-oriented training. The training would take place Monday through Friday and during one weekend per month.

In support of the ORANG's 142d and 173d Fighter Wings, the Air Force and the National Guard Bureau (NGB) are proposing (Alternative A) to expand, modify, and establish air-to-air training airspace areas in four locations around the state: (1) Proposed expansion of Warning Area 570 (W–570) to the west over the Pacific Ocean; (2) proposed establishment of the Eel Military Operations Area (MOA) directly underneath the existing Eel Air Traffic Control Assigned Area which is aligned north/south along the Oregon coast from approximately Astoria to Lincoln City and adjacent to W–570; (3) proposed establishment of the Redhawk MOA in north central Oregon roughly bounded by Highway 97/197 on the west, the towns of Wasco and Lexington on the north, US Highway 395 on the east, and US Highway 26 on the south; and (4) proposed expansion of the existing Juniper/Hart MOA Complex to the east approximately 20 miles which would extend from approximately Burns to Frenchglen in Oregon and to Big Mountain in northwestern Nevada. Four alternatives and the No-Action Alternative will be analyzed. Alternative B includes the majority of airspace changes proposed for Alternative A; however, the Eel MOA would not be established. Alternative C includes the airspace changes proposed under Alternative A but the Redhawk MOA would not be established. Alternative D includes the airspace changes under Alternative A but would not include the eastward expansion of Juniper/Hart MOA Complex. Reasonable alternatives, which satisfy the underlying purpose and need for the proposed action, that are identified during the scoping process will also be assessed.

Information: NGB will conduct public scoping meetings to solicit input concerning the proposal. The scoping process assists in determining the scope of issues to be addressed and to help identify significant environmental issues to be analyzed in depth in the EIS. Comments will be accepted at any time during the environmental impact analysis process; however, to ensure that NGB has sufficient time to consider public feedback in the preparation of the Draft EIS, scoping comments should be submitted to the address below no later than 60 days from the date of this notice.

Scoping meetings will be held in the following Oregon communities: Tillamook (June 17), Astoria (June 18), Condon (June 19), Burns (June 20), and Prineville (June 21). Specific meeting times and locations will be provided in notices that will appear in *The Oregonian* and regional media outlets. Additional information will be made available at *www.142fw.ang.af.mil* and *www.173fw.ang.af.mil.*

ADDRESSES: Robert Dogan, National Guard Bureau/A7AM, 3501 Fetchet Avenue, Joint Base Andrews, MD 20762–5157. Email: *ang.env.comments@ang.af.mil.*

Henry Williams Jr.,

Acting Air Force Federal Register Liaison Officer.

[FR Doc. 2013–11800 Filed 5–16–13; 8:45 am]

BILLING CODE 5001–10–P

DEPARTMENT OF DEFENSE

Notice of Intent To Prepare an Environmental Impact Statement for the Main Operating Base 2 (MOB–2) for the Beddown of KC–46A Tanker Aircraft

AGENCY: Department of the Air Force, DOD.

ACTION: Notice of Intent.

SUMMARY: The National Guard Bureau (NGB) is issuing this notice to advise the public of their intent to prepare an Environmental Impact Statement (EIS) for the Main Operating Base 2 (MOB–2) for the beddown of KC–46A tanker aircraft. The EIS will assess the potential environmental consequences of various alternatives of bedding down KC–46A tanker aircraft, associated infrastructure, and personnel in support of the MOB–2 at existing Air National Guard (ANG) installations within the continental United States.

The MOB–2 squadron would consist of 12 KC–46A that would replace an existing fleet of KC–135R aircraft. The KC–46A would continue supporting the mission of providing worldwide refueling, cargo, and aeromedical evacuation support. The proposed basing alternatives for MOB–2 include:

- 190 Air Refueling Wing (ARW), Forbes Air Guard Station (AGS), Kansas
- 108 Wing, Joint Base McGuire-Dix-Lakehurst, New Jersey
- 157 ARW, Pease AGS, New Hampshire
- 171 ARW, Pittsburgh AGS, Pennsylvania
- 121 ARW, Rickenbacker AGS, Ohio

Scoping: To effectively define the full range of issues and concerns to be evaluated in the EIS, the NGB is soliciting scoping comments from interested local, state, and federal agencies and interested members of the public. The NGB will hold a series of scoping meetings to inform the public as well as to solicit comments and concerns about the proposal. Scoping meetings will be held in the local communities near the alternative installations. The scheduled dates, times, locations, and addresses for the meetings will also be published in local newspapers a minimum of 15 days prior to the scoping meeting at each location.

DATES: The NGB intends to hold scoping meetings from 6:00 p.m. to 9:00 p.m. in the following communities on the following dates:

- Tuesday, June 4, Plumsted Fire District #1 Fire Station, 59 Main St., New Egypt, New Jersey.
- Tuesday, June 4, Township of Moon Municipal Building, 1000 Beaver Grade Rd., Moon Township, Pennsylvania.
- Thursday, June 6, Portsmouth Public Library, Levensen Community Meeting Room, 175 Parrott Ave., Portsmouth, New Hampshire.
- Thursday, June 6, Rickenbacker International Airport Terminal, 7161 Second St., Columbus, Ohio.
- Thursday, June 20, Museum of the Kansas National Guard, 6700 SW. Topeka Blvd., Topeka, Kansas.

SUPPLEMENTARY INFORMATION: The project Web site provides more information on the Environmental Impact Analysis Process and can also be used to submit scoping comments. Scoping comments may also be submitted by mail to the address listed below. To ensure the NGB has sufficient time to consider public comments in preparation of the Draft EIS, scoping comments must be submitted no later than June 10, 2013.

FOR FURTHER INFORMATION CONTACT: Mr. Robert Dogan, National Guard Bureau, NGB/A7AM, 3501 Fetchet Avenue, Joint Base Andrews, Maryland 20762–5157.

Henry Williams Jr.,

Acting Air Force Federal Register Liaison Officer.

[FR Doc. 2013–11799 Filed 5–16–13; 8:45 am]

BILLING CODE 5001–10–P

DEPARTMENT OF DEFENSE

Office of the Secretary

Strategic Environmental Research and Development Program, Scientific Advisory Board; Notice of Meeting

AGENCY: Department of Defense.

ACTION: Notice.

SUMMARY: Under the provisions of the Federal Advisory Committee Act of 1972 (5 U.S.C. Appendix, as amended), the Government in the Sunshine Act of 1976 (5 U.S.C. 552b, as amended), and 41 CFR 102–3.150, the Department of Defense announces an open meeting of the Strategic Environmental Research and Development Program, Scientific Advisory Board (SAB). This notice is published in accordance with Section 10(a)(2) of the Federal Advisory Committee Act (Pub. L. 92–463).

DATES: Wednesday, June 12, 2013 from 9:00 a.m. to 4:30 p.m.

ADDRESSES: Virginia Tech Briefing Center—Falls Church Room, 900 North Glebe Road, 2nd Floor, Arlington, VA 22203.

FOR FURTHER INFORMATION CONTACT: Mr. Jonathan Bunger, SERDP Office, 4800 Mark Center Drive, Suite 17D08 Alexandria, VA 22350–3600, by telephone at (571) 372–6384.

SUPPLEMENTARY INFORMATION: The purpose of the June 12, 2013 meeting is to review new start research and development projects requesting Strategic Environmental Research and Development Program funds in excess of $1 million over the proposed length of the project as required by the SERDP Statute, U.S. Code—Title 10, Subtitle A, Part IV, Chapter 172, § 2904. The full agenda follows:

9:00 a.m.	Convene/Opening Remarks; Approval of October 2012 Minutes.	Mr. Joseph Francis, Chair.
9:10 a.m.	Program Update	Dr. Jeffrey Marqusee, Executive Director.
9:25 a.m.	Resource Conservation and Climate Change Overview	Dr. John Hall, Resource Conservation and Climate Change, Program Manager.
9:35 a.m.	13 RC01–001 (RC–2334): The Impact of Sea-Level Rise and Climate Change on Department of Defense Installations on Atolls in the Pacific Ocean (FY13 New Start).	Dr. Curt Storlazzi, U.S. Geological Survey, Santa Cruz, CA.
10:20 a.m.	Break	
10:35 a.m.	13 RC01–004 (RC–2340): Water Resources on Guam: Potential impacts and adaptive response to climate change for Department of Defense Installations (FY13 New Start).	Dr. Stephen Gingerich, U.S. Geological Survey, Honolulu, HI.
11:20 a.m.	Academy Study of Health Risks from Lead Exposure at DOD Firing Ranges.	Ms. Susan Martel, Board on Environmental Studies and Toxicology, National Research Council, National Academy of Sciences.
12:20 p.m.	Lunch	
1:20 p.m.	Resource Conservation and Climate Change Overview	Dr. John Hall, Resource Conservation and Climate Change, Program Manager.
1:30 p.m.	RC–2242: Climate Change Impacts to Department of Defense Installations (FY12 Re-Brief).	Dr. Veerabhadra Kotamarthi, Argonne National Laboratory, Argonne, IL.
2:15 p.m.	Break	

2:30 p.m.	Science and Technology Directorate and Mission	Dr. Jeffrey Marqusee, Executive Director
3:00 p.m.	Weapons Systems and Platforms Overview	Dr. Robin Nissan, Weapons Systems and Platforms, Program Manager.
3:10 p.m.	13 WP04–007 (WP–2339): Generating a Synthetic Biology Toolbox for Nitroorganics (FY13 New Start).	Dr. Jon Magnuson, Pacific Northwest National Laboratory, Richland, WA.
3:55 p.m.	Underwater UXO Workshop	Dr. Herb Nelson, Munitions Response, Program Manager.
4:15 p.m.	Parliamentary Procedures	Dr. Anne Andrews, Deputy Director.
4:30 p.m.	Public Discussion/Adjourn	

Pursuant to 41 CFR 102–3.105(j) and 102–3.140, and section 10(a)(3) of the Federal Advisory Committee Act of 1972, written statements to the committee may be submitted to the committee at any time or in response to an approved meeting agenda.

Dated: May 14, 2013.

Aaron Siegel,

Alternate OSD Federal Register Liaison Officer, Department of Defense.

[FR Doc. 2013–11763 Filed 5–16–13; 8:45 am]

BILLING CODE 5001–06–P

DEPARTMENT OF DEFENSE

Office of the Secretary

Strategic Environmental Research and Development Program, Scientific Advisory Board; Notice of Meeting

AGENCY: Department of Defense.

ACTION: Notice.

SUMMARY: Under the provisions of the Federal Advisory Committee Act of 1972 (5 U.S.C. Appendix, as amended), the Government in the Sunshine Act of 1976 (5 U.S.C. 552b, as amended), and 41 CFR 102–3.150, the Department of Defense announces an open meeting of the Strategic Environmental Research and Development Program, Scientific Advisory Board (SAB). This notice is published in accordance with Section 10(a)(2) of the Federal Advisory Committee Act (Pub. L. 92–463).

DATES: Thursday, June 13, 2013 from 9:00 a.m. to 4:15 p.m.

ADDRESSES: Virginia Tech Briefing Center—Falls Church Room, 900 North Glebe Road, 2nd Floor, Arlington, VA 22203.

FOR FURTHER INFORMATION CONTACT: Mr. Jonathan Bunger, SERDP Office, 4800 Mark Center Drive, Suite 17D08, Alexandria, VA 22350–3600, by telephone at (571) 372–6384.

SUPPLEMENTARY INFORMATION: The purpose of the June 13, 2013 meeting is to review continuing research and development projects requesting Strategic Environmental Research and Development Program funds in excess of $1 million over the proposed length of the project as required by the SERDP Statute, U.S. Code–Title 10, Subtitle A, Part IV, Chapter 172, § 2904. The full agenda follows:

9:00 a.m. Convene
Mr. Joseph Francis, Chair.
9:05 a.m. Resource Conservation and Climate Change Overview
Dr. John Hall, Resource Conservation and Climate Change Program Manager.
9:15 a.m. 13 RC00–001 (RC–2245): Defense Coastal/Estuarine Research Program (DCERP) (FY13 Follow On)
Dr. Patricia Cunningham, RTI International, Research Triangle Park, NC.
11:15 a.m. Break
11:30 a.m. Energy's Systems Biology Knowledgebase (KBase)
Dr. Susan Gregurick, DOE, Office of Biological and Environmental Research.
12:30 p.m. Lunch
1:30 p.m. Munitions Response Overview
Dr. Herb Nelson, Munitions Response, Program Manager.
1:35 p.m. MR–2104: Real-Time Hand-Held Magnetometer Array (FY13 Re-Brief)
Dr. Mark Prouty, Geometrics, San Jose, CA.
2:20 p.m. Break
2:35 p.m. Wastewater Study
Dr. Judith Barry, Noblis, Seattle, WA.
2:55 p.m. Defense Environmental Restoration Program Study
Ms. Cathy Vogel, Noblis, Atlanta, GA.
3:15 p.m. Chlorinated Solvents Workshop
Dr. Andrea Leeson, Environmental Restoration, Program Manager.
3:35 p.m. Discussion, Future R & D Topics
SAB Members.
4:15 p.m. Public Discussion/Adjourn

Pursuant to 41 CFR 102–3.105(j) and 102–3.140, and section 10(a)(3) of the Federal Advisory Committee Act of 1972, written statements to the committee may be submitted to the committee at any time or in response to an approved meeting agenda.

Dated: May 14, 2013.

Aaron Siegel,

Alternate OSD Federal Register Liaison Officer, Department of Defense.

[FR Doc. 2013–11785 Filed 5–16–13; 8:45 am]

BILLING CODE 5001–06–P

DEPARTMENT OF DEFENSE

Department of the Air Force

[Docket ID: USAF–2013–0020]

Proposed Collection; Comment Request

AGENCY: Headquarter Air Force Special Operations Command (AFSOC) Special Activities, DoD.

ACTION: Notice.

In compliance with Section 3506(c)(2)(A) of the *Paperwork Reduction Act of 1995,* the Headquarter Air Force Special Operations Command Special Activities announces a proposed public information collection and seeks public comment on the provisions thereof. Comments are invited on: (a) Whether the proposed collection of information is necessary for the proper performance of the functions of the agency, including whether the information shall have practical utility; (b) the accuracy of the agency's estimate of the burden of the proposed information collection; (c) ways to enhance the quality, utility, and clarity of the information to be collected; and (d) ways to minimize the burden of the information collection on respondents, including through the use of automated collection techniques or other forms of information technology.

DATES: Consideration will be given to all comments received by July 16, 2013.

ADDRESSES: You may submit comments, identified by docket number and title, by any of the following methods:

- *Federal eRulemaking Portal: http://www.regulations.gov.* Follow the instructions for submitting comments.
- *Mail:* Federal Docket Management System Office, 4800 Mark Center Drive, East Tower, Suite 02G09, Alexandria, VA 22350–3100.

Instructions: All submissions received must include the agency name, docket number and title for this **Federal Register** document. The general policy for comments and other submissions from members of the public is to make these submissions available for public viewing on the Internet at *http://www.regulations.gov* as they are received without change, including any

personal identifiers or contact information.

Any associated form(s) for this collection may be located within this same electronic docket and downloaded for review/testing. Follow the instructions at *http://www.regulations.gov* for submitting comments. Please submit comments on any given form identified by docket number, form number, and title.

FOR FURTHER INFORMATION CONTACT: To request more information on this proposed information collection or to obtain a copy of the proposal and associated collection instruments, please write to the Headquarter Air Force Special Operations Command Special Activities Office, 100 Bartley St, Suite 107A, Hurlburt Field FL, 32544–5242, or call (850) 884–3951.

Title; Associated Form; and OMB Number: Air Force Special Operations Command Focal Point Access Control Lists; AF Form 1522; OMB Number 0701–TBD.

Needs and Uses: The information collection requirement is necessary to obtain and record individuals' personal identifiable information when those individuals are granted access to sensitive ''need to know'' material, known as Alternative Compensatory Control Measures (ACCMs). Personal information collected will include names, Social Security Numbers, DoD ID Numbers, rank/grade/position, office symbol and contact phone numbers. The respondent information will form an online database that will be used to verify access to ACCMs throughout the world for AFSOC active duty, civilian employees, and contractors. Proper verification prevents unintentional compromise of classified material. The AF Form 1522 is not used to collect respondent information, but serves to confirm the respondents have received their ACCM indoctrination. This database will be taken offline and transferred to the Joint Staff when no longer used by AFSOC.

Affected Public: Individuals or households.

Annual Burden Hours: 15.

Number of Respondents: 914.

Responses per Respondent: 1.

Average Burden per Response: 1 minute.

Frequency: On occasion.

SUPPLEMENTARY INFORMATION:

Summary of Information Collection

Respondents are military contractors requiring access to ACCM material to accomplish their duties or fulfill their military contracts. All personnel information is sent by unit/company security managers via encrypted email or Joint Personnel Adjudication System to the ACCM access database managers. Social Security and DoD ID Numbers are required to provide unique identifiers in the database and confirm individuals' security clearances. Only the minimum number of people necessary for access management will read or write to the database. By signing the requisite form, individuals confirm that they have received ACCM indoctrination and their information can be entered into the AFCOC ACCM online database. Confirming ACCM access levels is critical to prevent the inadvertent disclosure of classified material.

Dated: May 8, 2013.

Aaron Siegel,

Alternate OSD Federal Register Liaison Officer, Department of Defense.

[FR Doc. 2013–11818 Filed 5–16–13; 8:45 am]

BILLING CODE 5001–06–P

DEPARTMENT OF DEFENSE

Department of the Air Force

[Docket ID: USAF–2013–0018]

Proposed Collection; Comment Request

AGENCY: Department of Defense/Department of the Air Force/Headquarters, Air Force Safety Center (AFSEC), DoD.

ACTION: Notice.

In compliance with Section 3506(c)(2)(A) of the *Paperwork Reduction Act of 1995,* the Department of the Air Force announces a proposed public information collection and seeks public comment on the provisions thereof. Comments are invited on: (a) Whether the proposed collection of information is necessary for the proper performance of the functions of the agency, including whether the information shall have practical utility; (b) the accuracy of the agency's estimate of the burden of the proposed information collection; (c) ways to enhance the quality, utility, and clarity of the information to be collected; and (d) ways to minimize the burden of the information collection on respondents, including through the use of automated collection techniques or other forms of information technology.

DATES: Consideration will be given to all comments received by July 16, 2013.

ADDRESSES: You may submit comments, identified by docket number and title, by any of the following methods:

- *Federal eRulemaking Portal: http://www.regulations.gov.* Follow the instructions for submitting comments.
- *Mail:* Federal Docket Management System Office, 4800 Mark Center Drive, East Tower, Suite 02G09, Alexandria, VA 22350–3100.

Instructions: All submissions received must include the agency name, docket number and title for this **Federal Register** document. The general policy for comments and other submissions from members of the public is to make these submissions available for public viewing on the Internet at *http://www.regulations.gov* as they are received without change, including any personal identifiers or contact information.

FOR FURTHER INFORMATION CONTACT: To request more information on this proposed information collection or to obtain a copy of the proposal and associated collection instruments, please write to: Air Force Safety Automated System Administrator, HQ AFSEC/SEAC, 9700 G Ave SE., Kirtland Air Force Base, NM 87117–5670.

Title; and OMB Number: Air Force Safety Automated System (AFSAS), OMB Control Number 0701–TBD.

Needs and Uses: Information collected in the AFSAS includes individuals determined to be a factor in an Air Force (AF) or Department of Defense (DoD) mishap. The system meets DoD Instruction 6055.1 series reporting requirements governing aviation, space, weapons, and ground safety. Data collection includes personnel who are involved in a DoD related mishap, or experience an injury, illness or exposure while on a military installation or other areas under military control. It also includes personnel who operate a motorcycle on or off duty and personnel who operate a motorcycle on or off a DoD installation when in a duty status on official business. Data are used for analysis of safety risk and for prevention of mishaps.

Affected Public: Individuals or households.

Annual Burden Hours: 200.

Number of Respondents: 200.

Responses per Respondent: 1.

Average Burden per Response: 1 hour.

Frequency: On occasion.

SUPPLEMENTARY INFORMATION:

Summary of Information Collection

In the case of members of the public, this system collects information from DoD contractors or foreign military determined to be a factor in an DoD or AF mishap. To accurately investigate the mishap, the following categories of data collected can include personal

data, mishap data, occupational illness data, training data, hazard identification data, injury data, exposure data, facility inspection data, assessment/evaluation data, OSHA activity data, explosive site planning data, document hosting and management, job hazard analysis data, and survey assessment data.

Dated: May 9, 2013.

Aaron Siegel,

Alternate OSD Federal Register, Liaison Officer, Department of Defense.

[FR Doc. 2013–11815 Filed 5–16–13; 8:45 am]

BILLING CODE 5001–06–P

DEPARTMENT OF DEFENSE

Department of the Army

Draft Environmental Impact Statement (EIS) for the Implementation of Energy, Water, and Solid Waste Sustainability Initiatives at Fort Bliss, Texas and New Mexico

AGENCY: Department of the Army, DoD.

ACTION: Notice of Availability.

SUMMARY: The Department of the Army proposes to implement Net Zero energy, water and waste initiatives by 2020 at Fort Bliss to meet mandates for renewable energy production and greenhouse gas emissions reductions. In doing so, the Army will increase Fort Bliss' energy and water security, supporting the military mission into the future. Fort Bliss would not lose any training capability as a result of Net Zero project implementation. The Proposed Action consists of multiple, related, and interconnected projects to achieve Net Zero goals, comply with federal and Army energy mandates, and meet the Army's energy and water security objectives.

The Army's proposed energy, water, and waste initiatives that could reasonably be expected to move forward in the next three to eight years consist of implementation of conservation policies and procedures (Alternative 2); construction of a water reclamation pipeline (Alternative 3); construction and operation of a waste-to-energy plant (Alternative 4); construction and operation of a geothermal energy facility (Alternative 5); and, construction of dry-cooled concentrating solar power technology (Alternative 6). Alternative 7 proposes implementation of other renewable energy technologies and projects that are compatible with installation planning criteria and address potential future renewable energy, water, and waste technology actions at a programmatic level. If implemented, Alternative 7 actions may require further National Environmental Policy Act analysis. The Proposed Action initiatives (Alternatives 2 through 7) would work to enhance the overall sustainability and security of Fort Bliss.

DATES: The public comment period will end 45 days after publication of the notice of availability in the **Federal Register** by the U.S. Environmental Protection Agency.

ADDRESSES: Written comments should be addressed to Dr. John Kipp, Fort Bliss Directorate of Public Works, Attention: IMBL–PWE (Kipp), Building 624 Pleasonton Road, Fort Bliss, Texas 79916; email: *john.m.kipp6.civ@mail.mil;* fax: (915) 568–3548.

FOR FURTHER INFORMATION CONTACT: Please contact Ms. Donita Kelley, Fort Bliss Public Affairs Office, Attention: IMBL–PA (Kelley), Building 15 Slater Road, Fort Bliss, Texas 79916; phone: (915) 568–4505; email: *donita.k.schexnaydre.civ@mail.mil.*

SUPPLEMENTARY INFORMATION: The Army examined the potential environmental impacts from implementing multiple, related, and interconnected proposed projects that could be taken to implement Net Zero energy, water, and waste initiatives, comply with federal and Army energy mandates, and meet the Army's energy and water security objectives. Not all projects discussed in the Draft EIS would be implemented to the full extent discussed in the document. Technological advancements, legislative changes, and other factors may result in revisions to the proposed projects discussed in the alternatives section.

The proposed projects consist of six action alternatives (Proposed Action, Alternatives 2 through 7). The Draft EIS also analyzes the potential environmental impacts of the No Action Alternative (Alternative 1) and the cumulative impacts of the Proposed Action in combination with other past, present, and reasonably foreseeable future actions.

Potentially significant impacts discussed for the Proposed Action include possible effects to air quality, vegetation, archeological sites, soils, land use, and traffic. Of these, all but land use (as a result of converting training land to developed land) are anticipated to be mitigable to less than significant. Air quality also has potentially beneficial impacts discussed for the Proposed Action, as does energy demand and generation, socioeconomics, water supply sources, water demand, and wastewater reuse. To determine the extent of impacts to biological and cultural resources, the Army is consulting with the U.S. Fish and Wildlife Service, Texas and New Mexico State Historic Preservation Offices, Tribes, and other consulting parties.

Cooperating Agencies: The US Air Force (Holloman Air Force Base [AFB]) is a cooperating agency on the Draft EIS. Some of the proposed projects considered in the alternatives evaluated could affect Holloman AFB units that use Fort Bliss ranges and airspace for training operations.

Public Meetings and Public Comments: Public meetings on the Draft EIS will be held in Alamogordo, New Mexico, and El Paso, Texas. Notifications of the times and locations for the public meetings will be published in local newspapers and the environmental link on the Fort Bliss Web site *https://www.bliss.army.mil/DPW/Environmental/EISDocuments2.html.*

Native Americans, federal, state, and local agencies, organizations, and the public are invited to be involved in the process for the preparation of this EIS by participating in public meetings and/or submitting written comments on the Draft EIS to the above address by the end of the 45-day public comment period.

Copies of the Draft EIS are available at the following libraries: Alamogordo Public Library, El Paso Main Library, Irving Schwartz Branch Library, New Mexico State University Zuhl Library, Richard Burges Branch Library, Thomas Branigan Memorial Library, and University of Texas at El Paso Library. The Draft EIS may also be accessed at *http://ftblissnetzeroeis.net/index.html* or *https://www.bliss.army.mil/DPW/Environmental/EISDocuments2.html.*

Brenda S. Bowen,

Army Federal Register Liaison Officer.

[FR Doc. 2013–11732 Filed 5–16–13; 8:45 am]

BILLING CODE 3710–08–P

DEPARTMENT OF DEFENSE

Department of the Navy

Meeting of the U.S. Naval Academy Board of Visitors

AGENCY: Department of the Navy, DoD.

ACTION: Notice of partially closed meeting.

SUMMARY: The United States Naval Academy Board of Visitors will meet to make such inquiry, as the Board shall deem necessary, into the state of morale and discipline, the curriculum, instruction, physical equipment, fiscal

affairs, and academic methods of the Naval Academy. The executive session of this meeting from 11:00 a.m. to 12:00 p.m. on June 3, 2013, will include discussions of disciplinary matters and personnel issues at the Naval Academy; the disclosure of which would constitute a clearly unwarranted invasion of personal privacy. For this reason, the executive session of this meeting will be closed to the public.

DATES: The open session of the meeting will be held on June 3, 2013, from 8:30 a.m. to 11:00 a.m. The closed session of this meeting will be the executive session held from 11:00 a.m. to 12:00 p.m.

ADDRESSES: The meeting will be held in the Bo Coppedge Room at the Naval Academy in Annapolis, MD. The meeting will be handicap accessible.

FOR FURTHER INFORMATION CONTACT: Lieutenant Commander Matt Cady, USN, Executive Secretary to the Board of Visitors, Office of the Superintendent, U.S. Naval Academy, Annapolis, MD 21402–5000, 410–293–1503.

SUPPLEMENTARY INFORMATION: This notice of meeting is provided per the Federal Advisory Committee Act, as amended (5 U.S.C. App.). The executive session of the meeting from 11:00 a.m. to 12:00 p.m. on June 3, 2013, will consist of discussions of new and pending administrative/minor disciplinary infractions and non-judicial punishments involving the Midshipmen attending the Naval Academy to include but not limited to individual honor/conduct violations within the Brigade, and personnel issues. The discussion of such information cannot be adequately segregated from other topics, which precludes opening the executive session of this meeting to the public. Accordingly, the Under Secretary of the Navy has determined in writing that the meeting shall be partially closed to the public because the discussions during the executive session from 11:00 a.m. to 12:00 p.m. will be concerned with matters coming under sections 552b(c)(5), (6), and (7) of title 5, United States Code.

Dated: May 9, 2013.

C. K. Chiappetta,

Lieutenant Commander, Office of the Judge Advocate General, U.S. Navy, Federal Register Liaison Officer.

[FR Doc. 2013–11782 Filed 5–16–13; 8:45 am]

BILLING CODE 3810–FF–P

DEPARTMENT OF ENERGY

Nuclear Energy Advisory Committee

AGENCY: Office of Nuclear Energy, Department of Energy.

ACTION: Notice of open meeting.

SUMMARY: This notice announces a meeting of the Nuclear Energy Advisory Committee (NEAC). Federal Advisory Committee Act (Pub. L. 94–463, 86 Stat. 770) requires that public notice of these meetings be announced in the **Federal Register**.

DATES: Thursday, June 13, 2013; 9:00 a.m.–4:00 p.m.

ADDRESSES: L'Enfant Plaza Hotel, 480 L'Enfant Plaza SW., Washington, DC 20024.

FOR FURTHER INFORMATION CONTACT: Bob Rova, Designated Federal Officer, U.S. Department of Energy, 1000 Independence Avenue SW., Washington DC 20585; telephone (301) 903–9096; email *Robert.rova@nuclear.energy.gov*.

SUPPLEMENTARY INFORMATION:

Background: The Nuclear Energy Advisory Committee (NEAC), formerly the Nuclear Energy Research Advisory Committee (NERAC), was established in 1998 by the U.S. Department of Energy (DOE) to provide advice on complex scientific, technical, and policy issues that arise in the planning, managing, and implementation of DOE's civilian nuclear energy research programs. The committee is composed of 18 individuals of diverse backgrounds selected for their technical expertise and experience, established records of distinguished professional service, and their knowledge of issues that pertain to nuclear energy.

Purpose of the Meeting: To inform the committee of recent developments and current status of research programs and projects pursued by the Department of Energy's Office of Nuclear Energy and receive advice and comments in return from the committee.

Tentative Agenda: The meeting is expected to include presentations that cover such topics as update on activities for the Office of Nuclear Energy, Characterization Methods to Evaluate the Aging of Used Nuclear Fuel in Storage Integrated Research Project and Fluoride Salt High Temperature Reactor Integrated Research Project. In addition, there will be presentations by Nuclear Energy Advisory Committee subcommittees. The agenda may change to accommodate committee business. For updates, please visit the NEAC Web site: *http://energy.gov/ne/nuclear-energy-advisory-committee*.

Public Participation: Individuals and representatives of organizations who would like to offer comments and suggestions may do so on the day of the meeting, Thursday, June 13, 2013. Approximately thirty minutes will be reserved for public comments. Time allotted per speaker will depend on the number who wish to speak but is not expected to exceed 5 minutes. Anyone who is not able to make the meeting or has had insufficient time to address the committee is invited to send a written statement to Bob Rova, U.S. Department of Energy, 1000 Independence Avenue SW., Washington DC 20585, or by email: *robert.rova@nuclear.energy.gov*.

Minutes: The minutes of the meeting will be available by contacting Mr. Rova at the address above or on the Department of Energy, Office of Nuclear Energy Web site at *http://energy.gov/ne/nuclear-energy-advisory-committee*.

Issued in Washington, DC on May 13, 2013.

LaTanya R. Butler,

Deputy Committee Management Officer.

[FR Doc. 2013–11783 Filed 5–16–13; 8:45 am]

BILLING CODE 6450–01–P

DEPARTMENT OF ENERGY

Office of Energy Efficiency and Renewable Energy

Biomass Research and Development Technical Advisory Committee

AGENCY: Office of Energy Efficiency and Renewable Energy, Department of Energy.

ACTION: Notice of open meeting.

SUMMARY: This notice announces an open meeting of the Biomass Research and Development Technical Advisory Committee. The Federal Advisory Committee Act (Pub. L. 92–463, 86 Stat. 770) requires that public notice of these meetings be announced in the **Federal Register**.

DATES: June 5, 2012 8:30 a.m.–5:45 p.m.; June 6, 2012 8:30 a.m.–12 p.m.

ADDRESSES: Embassy Suites Hotel Orlando, International Drive/Convention Center, 8978 International Drive, Orlando, Florida.

FOR FURTHER INFORMATION CONTACT: Elliott Levine, Designated Federal Officer, Office of Energy Efficiency and Renewable Energy, U.S. Department of Energy, 1000 Independence Avenue SW., Washington, DC 20585; (202) 586–1476; email: *Elliott.Levine@ee.doe.gov* or Roy Tiley at (410) 997–7778 ext. 220; email: *rtiley@bcs-hq.com*.

SUPPLEMENTARY INFORMATION: *Purpose of the Committee:* The Committee advises the points of contact (Departments of

Energy and Agriculture) with respect to the Biomass R&D Initiative (Initiative) and also makes written recommendations to the Biomass R&D Board (Board). Those recommendations regard whether: (A) Initiative funds are distributed and used consistent with Initiative objectives; (B) solicitations are open and competitive with awards made annually; (C) objectives and evaluation criteria of the solicitations are clear; and (D) the points of contact are funding proposals selected on the basis of merit, and determined by an independent panel of qualified peers.

Purpose of Meeting: To provide advice and guidance that promotes research and development leading to the production of biobased fuels and biobased products.

Tentative Agenda: Agenda will include the following:

- Update on USDA Biomass R&D Activities
- Update on DOE Biomass R&D Activities
- Overview of DOE Inegrated Biorefinery Portfolio
- Presentation from the Florida Center for Renewable Chemicals and Fuels
- A Review of the Recent Pilot Scale Demonstration and its Implication on Commercial Scale Economics

Public Participation: In keeping with procedures, members of the public are welcome to observe the business of the Biomass Research and Development Technical Advisory Committee. To attend the meeting and/or to make oral statements regarding any of the items on the agenda, you must contact Elliott Levine at 202–586–1476; Email: *Elliott.Levine@ee.doe.gov* or Roy Tiley at (410) 997–7778 ext. 220; Email: *rtiley@bcs-hq.com* at least 5 business days prior to the meeting. Members of the public will be heard in the order in which they sign up at the beginning of the meeting. Reasonable provision will be made to include the scheduled oral statements on the agenda. If you would like to file a written statement with the Committee, you may do so either before or after the meeting. The Co-chairs will conduct the meeting to facilitate the orderly conduct of business.

Minutes: The minutes of the meeting will be available for public review and copying at *http://biomassboard.gov/committee/meetings.html*.

Issued at Washington, DC, on May 13, 2013.

LaTanya R. Butler,

Deputy Committee Management Officer.

[FR Doc. 2013–11786 Filed 5–16–13; 8:45 am]

BILLING CODE 6450–01–P

DEPARTMENT OF ENERGY

Federal Energy Regulatory Commission

Combined Notice of Filings #1

Take notice that the Commission received the following electric corporate filings:

Docket Numbers: EC13–104–000.
Applicants: Chisholm View Wind Project, LLC.
Description: Application for Authorization Under Section 203 of the Federal Power Act, Request for Expedited Consideration and Confidential Treatment of Chisholm View Wind Project, LLC.
Filed Date: 5/8/13.
Accession Number: 20130508–5016.
Comments Due: 5 p.m. ET 5/29/13.

Docket Numbers: EC13–105–000.
Applicants: Prairie Rose Wind, LLC, Prairie Rose Transmission, LLC.
Description: Joint Application for Authorization Under Section 203 of the Federal Power Act, Request for Expedited Consideration and Confidential Treatment of Prairie Rose Wind, LLC, et al.
Filed Date: 5/8/13.
Accession Number: 20130508–5018.
Comments Due: 5 p.m. ET 5/29/13.

Take notice that the Commission received the following exempt wholesale generator filings:

Docket Numbers: EG13–32–000.
Applicants: Arlington Valley Solar Energy II, LLC.
Description: Notice of Self-Certification of Exempt Wholesale Generator Status.
Filed Date: 5/6/13.
Accession Number: 20130506–5113.
Comments Due: 5 p.m. ET 5/28/13.

Take notice that the Commission received the following electric rate filings:

Docket Numbers: ER13–1258–001.
Applicants: Land O'Lakes, Inc.
Description: Inquiry Response to be effective 6/14/2013.
Filed Date: 5/8/13.
Accession Number: 20130508–5000.
Comments Due: 5 p.m. ET 5/29/13.

Docket Numbers: ER13–1429–000.
Applicants: PJM Interconnection, L.L.C.
Description: Revisions to the PJM OA Schedule 12 to remove Blast Electric, L.L.C. to be effective 12/31/9998.
Filed Date: 5/6/13.
Accession Number: 20130506–5085.
Comments Due: 5 p.m. ET 5/28/13.

Docket Numbers: ER13–1430–000.
Applicants: Arlington Valley Solar Energy II, LLC.
Description: Application for Market-Based Rate Authorization to be effective 5/7/2013.
Filed Date: 5/6/13.
Accession Number: 20130506–5090.
Comments Due: 5 p.m. ET 5/28/13.

Docket Numbers: ER13–1431–000.
Applicants: Northampton Generating Company, L.P.
Description: Reactive Power Tariff to be effective 6/1/2013.
Filed Date: 5/7/13.
Accession Number: 20130507–5057.
Comments Due: 5 p.m. ET 5/28/13.

Docket Numbers: ER13–1432–000.
Applicants: Duke Energy Carolinas, LLC.
Description: Concord PPA—RS 327 Revisions (2013) to be effective 7/2/2012.
Filed Date: 5/7/13.
Accession Number: 20130507–5058.
Comments Due: 5 p.m. ET 5/28/13.

Docket Numbers: ER13–1433–000.
Applicants: Duke Energy Carolinas, LLC.
Description: Kings Mountain PPA—RS 331 Revision (2013) to be effective 7/2/2012.
Filed Date: 5/7/13.
Accession Number: 20130507–5061.
Comments Due: 5 p.m. ET 5/28/13.

Docket Numbers: ER13–1434–000.
Applicants: MATL LLP.
Description: Cancel Previous Database to be effective 5/7/2013.
Filed Date: 5/7/13.
Accession Number: 20130507–5121.
Comments Due: 5 p.m. ET 5/28/13.

Docket Numbers: ER13–1435–000.
Applicants: Michigan Public Power Agency.
Description: Specification of Revenue Requirement for Reactive Supply Service to be effective 5/7/2013.
Filed Date: 5/7/13.
Accession Number: 20130507–5122.
Comments Due: 5 p.m. ET 5/14/13.

Docket Numbers: ER13–1436–000.
Applicants: American Municipal Power, Inc.
Description: Specification of Revenue Requirement for Reactive Supply Service to be effective 5/7/2013.
Filed Date: 5/7/13.
Accession Number: 20130507–5123.
Comments Due: 5 p.m. ET 5/14/13.

Docket Numbers: ER13–1437–000.
Applicants: Southern California Edison Company.
Description: SGIA and Distribution Service Agreement with Coram Energy, LLC to be effective 5/9/2013.
Filed Date: 5/8/13.
Accession Number: 20130508–5001.
Comments Due: 5 p.m. ET 5/29/13.

Take notice that the Commission received the following electric securities filings:

Docket Numbers: ES13–19–000.
Applicants: AEP Texas Central Company.
Description: Supplement to and including Amended/Restated Paragraph of Section 1.E and Revised Exhibits C, D and E to April 15, 2013 Application of AEP Texas Central Company.
Filed Date: 5/3/13.
Accession Number: 20130503–5022.
Comments Due: 5 p.m. ET 5/13/13.

Docket Numbers: ES13–23–000.
Applicants: New Hampshire Transmission, LLC.
Description: Application of New Hampshire Transmission, LLC for Authorization to Issue Long-Term Debt Securities under Section 204.
Filed Date: 5/7/13.
Accession Number: 20130507–5107.
Comments Due: 5 p.m. ET 5/28/13.

Take notice that the Commission received the following land acquisition reports:

Docket Numbers: LA13–1–000.
Applicants: Duke Energy Corporation.
Description: Quarterly Land Acquisition Report of Duke Energy Corporation.
Filed Date: 5/7/13.
Accession Number: 20130507–5056.
Comments Due: 5 p.m. ET 5/28/13.

Take notice that the Commission received the following qualifying facility filings:

Docket Numbers: QF13–411–000.
Applicants: The Smithfield Packing Company, Inc.
Description: Form 556—Notice of self-certification of qualifying cogeneration facility status of The Smithfield Packing Company Inc.
Filed Date: 5/8/13.
Accession Number: 20130508–5015.
Comments Due: None Applicable.

The filings are accessible in the Commission's eLibrary system by clicking on the links or querying the docket number.

Any person desiring to intervene or protest in any of the above proceedings must file in accordance with Rules 211 and 214 of the Commission's Regulations (18 CFR 385.211 and 385.214) on or before 5:00 p.m. Eastern time on the specified comment date. Protests may be considered, but intervention is necessary to become a party to the proceeding.

eFiling is encouraged. More detailed information relating to filing requirements, interventions, protests, service, and qualifying facilities filings can be found at: *http://www.ferc.gov/docs-filing/efiling/filing-req.pdf*. For other information, call (866) 208–3676 (toll free). For TTY, call (202) 502–8659.

Dated: May 8, 2013.

Nathaniel J. Davis, Sr.,

Deputy Secretary.

[FR Doc. 2013–11803 Filed 5–16–13; 8:45 am]

BILLING CODE 6717–01–P

DEPARTMENT OF ENERGY

Federal Energy Regulatory Commission

Combined Notice of Filings #1

Take notice that the Commission received the following exempt wholesale generator filings:

Docket Numbers: EG13–33–000.
Applicants: Solar Star California XIX, LLC.
Description: Self-Certification of EWG Status of Solar Star California XIX, LLC.
Filed Date: 5/9/13.
Accession Number: 20130509–5024.
Comments Due: 5 p.m. ET 5/30/13.

Docket Numbers: EG13–34–000.
Applicants: Solar Star California XX, LLC.
Description: Self-Certification of EWG Status of Solar Star California XX, LLC.
Filed Date: 5/9/13.
Accession Number: 20130509–5025.
Comments Due: 5 p.m. ET 5/30/13.

Take notice that the Commission received the following electric rate filings:

Docket Numbers: ER12–2498–001; ER12–2499–001.
Applicants: Alpaugh 50, LLC, Alpaugh North, LLC.
Description: Notice of Change in Status of Alpaugh 50, LLC, et al.
Filed Date: 5/9/13.
Accession Number: 20130509–5080.
Comments Due: 5 p.m. ET 5/30/13.

Docket Numbers: ER13–1021–001.
Applicants: Mesquite Solar 1, LLC.
Description: Mesquite Solar 1, LLC Compliance Filing to be effective 2/28/2013.
Filed Date: 5/9/13.
Accession Number: 20130509–5075.
Comments Due: 5 p.m. ET 5/30/13.

Docket Numbers: ER13–1077–001.
Applicants: Niagara Mohawk Power Corporation, New York Independent System Operator, Inc.
Description: Revised LGIA 1970 between National Grid and Indeck-Yerkes to be effective 12/26/2012.
Filed Date: 5/9/13.
Accession Number: 20130509–5050.
Comments Due: 5 p.m. ET 5/30/13.

Docket Numbers: ER10–1459–005.
Applicants: FirstEnergy Solutions Corp.
Description: Revised Affiliate Sales MBR Power Sales Tariff to be effective 6/1/2013.
Filed Date: 5/8/13.
Accession Number: 20130508–5118.
Comments Due: 5 p.m. ET 5/29/13.

Docket Numbers: ER13–1440–000.
Applicants: Electricity MASS, LLC.
Description: Electricity MASS, LLC FERC Tariff to be effective 5/9/2013.
Filed Date: 5/9/13.
Accession Number: 20130509–5000.
Comments Due: 5 p.m. ET 5/30/13.

Docket Numbers: ER13–1441–000.
Applicants: Solar Star California XIX, LLC.
Description: Application for MBR Authority to be effective 7/8/2013.
Filed Date: 5/9/13.
Accession Number: 20130509–5032.
Comments Due: 5 p.m. ET 5/30/13.

Docket Numbers: ER13–1442–000.
Applicants: Solar Star California XX, LLC.
Description: Application for MBR Authority to be effective 7/8/2013.
Filed Date: 5/9/13.
Accession Number: 20130509–5033.
Comments Due: 5 p.m. ET 5/30/13.

Docket Numbers: ER13–1443–000.
Applicants: PJM Interconnection, L.L.C.
Description: Original Service Agreement No. 3528; Queue No. X3–041 to be effective 4/19/2013.
Filed Date: 5/9/13.
Accession Number: 20130509–5051.
Comments Due: 5 p.m. ET 5/30/13.

Docket Numbers: ER13–1444–000.
Applicants: Midcontinent Independent System Operator, Inc.
Description: 05–09–2013 SA 1637 ITC & High Prairie Wind Amend GIA to be effective 5/10/2013.
Filed Date: 5/9/13.
Accession Number: 20130509–5068.
Comments Due: 5 p.m. ET 5/30/13.

The filings are accessible in the Commission's eLibrary system by clicking on the links or querying the docket number.

Any person desiring to intervene or protest in any of the above proceedings must file in accordance with Rules 211 and 214 of the Commission's Regulations (18 CFR 385.211 and 385.214) on or before 5:00 p.m. Eastern time on the specified comment date. Protests may be considered, but intervention is necessary to become a party to the proceeding.

eFiling is encouraged. More detailed information relating to filing requirements, interventions, protests, service, and qualifying facilities filings can be found at: *http://www.ferc.gov/docs-filing/efiling/filing-req.pdf*. For other information, call (866) 208–3676 (toll free). For TTY, call (202) 502–8659.

Dated: May 9, 2013.

Nathaniel J. Davis, Sr.,

Deputy Secretary.

[FR Doc. 2013–11805 Filed 5–16–13; 8:45 am]

BILLING CODE 6717–01–P

DEPARTMENT OF ENERGY

Federal Energy Regulatory Commission

Combined Notice of Filings #1

Take notice that the Commission received the following electric corporate filings:

Docket Numbers: EC13–93–000.

Applicants: Ameren Energy Generating Company, AmerenEnergy Resources Generating Company, Ameren Energy Marketing Company, Electric Energy, Inc., Midwest Electric Power, Inc., AmerenEnergy Medina Valley Cogen, L.L.C., Dynegy Inc.

Description: Ameren Energy Generating Company et al submit supplemental information filing re the Simultaneous Import Limitation study.

Filed Date: 5/9/13.

Accession Number: 20130510–0005.

Comments Due: 5 p.m. ET 6/17/13.

Take notice that the Commission received the following exempt wholesale generator filings:

Docket Numbers: EG13–35–000.

Applicants: Cabrillo Power I LLC.

Description: Self-Certification of EG of Cabrillo Power I LLC.

Filed Date: 5/9/13.

Accession Number: 20130509–5122.

Comments Due: 5 p.m. ET 5/30/13.

Take notice that the Commission received the following electric rate filings:

Docket Numbers: ER10–2763–008; ER10–2732–008; ER10–2733–008 ER10–2734–008; ER10–2736–008; ER10–2737–008 ER10–2741–008; ER10–2749–008; ER10–2752–008 ER12–2492–004; ER12–2493–004; ER12–2494–004 ER12–2495–004; ER12–2496–004.

Applicants: Bangor Hydro Electric Company, Emera Energy Services, Inc., Emera Energy U.S. Subsidiary No. 1, Inc. Emera Energy U.S. Subsidiary No. 2, Inc., Emera Energy Services Subsidiary No. 1 LLC, Emera Energy Services Subsidiary No. 2 LLC, Emera Energy services Subsidiary No. 3 LLC, Emera Energy Services Subsidiary No. 4 LLC, Emera Energy Services Subsidiary No. 5 LLC, Emera Energy Services Subsidiary No. 6 LLC, Emera Energy Services Subsidiary No. 7 LLC, Emera Energy Services Subsidiary No. 8 LLC, Emera Energy Services Subsidiary No. 9 LLC, Emera Energy Services Subsidiary No. 10 LLC.

Description: Supplement to April 22, 2013 Notice of Change in Status of Bangor Hydro Electric Company, et al.

Filed Date: 5/10/13.

Accession Number: 20130510–5032.

Comments Due: 5 p.m. ET 5/31/13.

Docket Numbers: ER10–2985–009; ER10–3049–010; ER10–3051–010.

Applicants: Champion Energy Marketing LLC, Champion Energy Services, LLC, Champion Energy, LLC.

Description: Second Supplement to January 9, 2013 Updated Market Power Analysis for the Southwest Region of Champion Energy Marketing LLC, et al.

Filed Date: 5/9/13.

Accession Number: 20130509–5052.

Comments Due: 5 p.m. ET 5/30/13.

Docket Numbers: ER11–4267–006; ER11–4270–006; ER11–4269–007; ER11–4268–006; ER11–113–007; ER10–2682–006 ER12–1680–004; ER11–4694–003.

Applicants: Algonquin Energy Services Inc., Algonquin Power Windsor Locks LLC, Algonquin Tinker Gen Co., Algonquin Northern Maine Gen Co., Sandy Ridge Wind, LLC, Granite State Electric Company, Minonk Wind, LLC, GSG 6, LLC.

Description: Supplement to April 26, 2013 Notice of Change in Status of Algonquin Energy Services Inc., et al.

Filed Date: 5/8/13.

Accession Number: 20130508–5094.

Comments Due: 5 p.m. ET 5/29/13.

Docket Numbers: ER13–909–001.

Applicants: New York Independent System Operator, Inc.

Description: NYISO Response to Request for Further Information re: Scarcity Pricing to be effective 7/8/2013.

Filed Date: 5/9/13.

Accession Number: 20130509–5107.

Comments Due: 5 p.m. ET 5/30/13.

Docket Numbers: ER13–1348–000.

Applicants: Gainesville Renewable Energy Center.

Description: Supplement to April 26, 2013 Application for Market Based Rate Authority of Gainesville Renewable Energy Center.

Filed Date: 5/10/13.

Accession Number: 20130510–5121.

Comments Due: 5 p.m. ET 5/20/13.

Docket Numbers: ER13–1368–001.

Applicants: NaturEner Wind Watch, LLC.

Description: Supplement to Market-Based Rate Application to be effective 5/1/2013.

Filed Date: 5/10/13.

Accession Number: 20130510–5027.

Comments Due: 5 p.m. ET 5/31/13.

Docket Numbers: ER13–1445–000.

Applicants: Avista Corporation.

Description: Avista Corp Electric Tariff Vol. No. 9 Revisions to be effective 5/10/2013.

Filed Date: 5/9/13.

Accession Number: 20130509–5108.

Comments Due: 5 p.m. ET 5/30/13.

Docket Numbers: ER13–1446–000.

Applicants: Southwest Power Pool, Inc.

Description: Request for Waiver of Tariff Provision and Expedited Treatment of Southwest Power Pool, Inc.

Filed Date: 5/9/13.

Accession Number: 20130509–5109.

Comments Due: 5 p.m. ET 5/20/13.

Docket Numbers: ER13–1451–000.

Applicants: Southwestern Public Service Company.

Description: Southwestern Public Service Company submits 5–10–13_RS114 SPS-Central Valley to be effective 1/1/2012.

Filed Date: 5/10/13.

Accession Number: 20130510–5095.

Comments Due: 5 p.m. ET 5/31/13.

Docket Numbers: ER13–1452–000.

Applicants: Southwestern Public Service Company.

Description: Southwestern Public Service Company submits 5–10–13_RS116 SPS-Lea County to be effective 1/1/2012.

Filed Date: 5/10/13.

Accession Number: 20130510–5096.

Comments Due: 5 p.m. ET 5/31/13.

Docket Numbers: ER13–1453–000.

Applicants: Southwestern Public Service Company.

Description: Southwestern Public Service Company submits 5–10–13_RS117 SPS-Roosevelt to be effective 1/1/2012.

Filed Date: 5/10/13.

Accession Number: 20130510–5097.

Comments Due: 5 p.m. ET 5/31/13.

Docket Numbers: ER13–1454–000.

Applicants: Southwestern Public Service Company.

Description: Southwestern Public Service Company submits 5–10–13_RS118 SPS-Sharyland to be effective 1/1/2012.

Filed Date: 5/10/13.

Accession Number: 20130510–5098.

Comments Due: 5 p.m. ET 5/31/13.

Docket Numbers: ER13–1455–000.

Applicants: Southwestern Public Service Company.

Description: Southwestern Public Service Company submits 5–10–13_RS135 SPS–GSEC to be effective 1/1/2012.

Filed Date: 5/10/13.

Accession Number: 20130510–5099.

Comments Due: 5 p.m. ET 5/31/13.

Docket Numbers: ER13–1456–000.

Applicants: Southwestern Public Service Company.

Description: Southwestern Public Service Company submits 5–10–

13_RS137 SPS–WTMPA to be effective 1/1/2012.
Filed Date: 5/10/13.
Accession Number: 20130510–5100.
Comments Due: 5 p.m. ET 5/31/13.

Docket Numbers: ER13–1458–000.
Applicants: Southwestern Public Service Company.
Description: 5–10–13_RS115 SPS-Farmers to be effective 1/1/2012.
Filed Date: 5/10/13.
Accession Number: 20130510–5102.
Comments Due: 5 p.m. ET 5/31/13.

Docket Numbers: ER13–1459–000.
Applicants: ISO New England Inc.
Description: ISO New England Inc., Capital Budget Quarterly Filing for First Quarter of 2013.
Filed Date: 5/10/13.
Accession Number: 20130510–5109.
Comments Due: 5 p.m. ET 5/31/13.

Docket Numbers: ER13–1464–000.
Applicants: Public Service Company of New Hampshire.
Description: Public Service Company of New Hampshire Cancellation of Design, Engineering and Procurement Agreement to be effective 5/9/2012.
Filed Date: 5/10/13.
Accession Number: 20130510–5129.
Comments Due: 5 p.m. ET 5/31/13.

Take notice that the Commission received the following land acquisition reports:

Docket Numbers: LA13–1–000.
Applicants: East Coast Power Linden Holding, L.L.C., Cogen Technologies Linden Venture, L.P., Birchwood Power Partners, L.P., Shady Hills Power Company, L.L.C., EFS Parlin Holdings, LLC, Inland Empire Energy Center, LLC, Homer City Generation, L.P.
Description: Quarterly Land Acquisition Report of the GE Companies.
Filed Date: 4/30/13.
Accession Number: 20130430–5227.
Comments Due: 5 p.m. ET 5/21/13.

Take notice that the Commission received the following open access transmission tariff filings:

Docket Numbers: OA13–5–000.
Applicants: Patua Project LLC.
Description: Patua Project LLC submits Petition for Waiver of Requirements of Order Nos. 888, 889 and 890, and the Standards of Conduct.
Filed Date: 5/6/13.
Accession Number: 20130506–5135.
Comments Due: 5 p.m. ET 5/28/13.

Take notice that the Commission received the following electric reliability filings:

Docket Numbers: RD13–10–000.
Applicants: North American Electric Reliability Corporation.
Description: Petition of North American Electric Reliability Corporation for Approval of the NERC Glossary Terms ''Bulk-Power System,'' ''Reliable Operation,'' and ''Reliability Standard.''
Filed Date: 5/10/13.
Accession Number: 20130510–5033.
Comments Due: 5 p.m. ET 5/31/13.

The filings are accessible in the Commission's eLibrary system by clicking on the links or querying the docket number.

Any person desiring to intervene or protest in any of the above proceedings must file in accordance with Rules 211 and 214 of the Commission's Regulations (18 CFR 385.211 and 385.214) on or before 5:00 p.m. Eastern time on the specified comment date. Protests may be considered, but intervention is necessary to become a party to the proceeding.

eFiling is encouraged. More detailed information relating to filing requirements, interventions, protests, service, and qualifying facilities filings can be found at: *http://www.ferc.gov/docs-filing/efiling/filing-req.pdf.* For other information, call (866) 208–3676 (toll free). For TTY, call (202) 502–8659.

Dated: May 10, 2013.

Nathaniel J. Davis, Sr.,

Deputy Secretary.

[FR Doc. 2013–11806 Filed 5–16–13; 8:45 am]

BILLING CODE 6717–01–P

DEPARTMENT OF ENERGY

Federal Energy Regulatory Commission

Combined Notice of Filings #2

Take notice that the Commission received the following electric corporate filings:

Docket Numbers: EC13–103–000.
Applicants: Midwest Generation, LLC.
Description: Application for Authorization for a Change in Control over Jurisdictional Facilities Under Section 203 of the Federal Power Act and Request for Shortened Notice Period and Expedited Consideration.
Filed Date: 5/6/13.
Accession Number: 20130506–5157.
Comments Due: 5 p.m. ET 6/14/13.

Take notice that the Commission received the following electric rate filings:

Docket Numbers: ER13–301–003.
Applicants: Southwest Power Pool, Inc.
Description: Compliance Filing—ER13–301—Mid-Kansas Electric Company Formula Rate to be effective 1/1/2013.
Filed Date: 5/8/13.
Accession Number: 20130508–5098.
Comments Due: 5 p.m. ET 5/29/13.

Docket Numbers: ER13–895–002.
Applicants: ISO New England Inc.
Description: Notice of Effective Date—Modify Day-Ahead Energy Market Schedule to be effective 5/23/2013.
Filed Date: 5/8/13.
Accession Number: 20130508–5095.
Comments Due: 5 p.m. ET 5/15/13.

Docket Numbers: ER13–1257–000.
Applicants: New England Power Pool Participants Committee, ISO New England Inc.
Description: Req. Eff. Date for Rev. to FAP and Billing Policy to be effective N/A.
Filed Date: 5/8/13.
Accession Number: 20130508–5100.
Comments Due: 5 p.m. ET 5/29/13.

Docket Numbers: ER13–1258–001.
Applicants: Land O'Lakes, Inc.
Description: Inquiry Response to be effective 6/14/2013.
Filed Date: 5/8/13.
Accession Number: 20130508–5000.
Comments Due: 5 p.m. ET 5/29/13.

Docket Numbers: ER13–1438–000.
Applicants: Public Service Company of New Mexico.
Description: Second Revised SPS Agreement to be effective 6/1/2013.
Filed Date: 5/8/13.
Accession Number: 20130508–5060.
Comments Due: 5 p.m. ET 5/29/13.

Docket Numbers: ER13–1438–001.
Applicants: Public Service Company of New Mexico.
Description: Substitute Service Agreement 317 to be effective 6/1/2013.
Filed Date: 5/8/13.
Accession Number: 20130508–5075.
Comments Due: 5 p.m. ET 5/29/13.

Docket Numbers: ER13–1439–000.
Applicants: Arizona Public Service Company.
Description: Arizona Public Service Company submits Notice of Cancellation of Rate Schedule No. 202.
Filed Date: 5/8/13.
Accession Number: 20130508–5079.
Comments Due: 5 p.m. ET 5/29/13.

Take notice that the Commission received the following foreign utility company status filings:

Docket Numbers: FC13–8–000.
Applicants: Ituiutaba Bioenergia Ltda.
Description: Self-Certification of Foreign Utility Company Status of Ituiutaba Bioenergia Ltda.
Filed Date: 5/8/13.
Accession Number: 20130508–5091.
Comments Due: 5 p.m. ET 5/29/13.

Docket Numbers: FC13–9–000.
Applicants: Central Itumbiara de Bioenergia e Alimen.
Description: Self-Certification of Foreign Utility Company Status of

Central Itumbiara de Bioenergia e Alimentos S.A.

Filed Date: 5/8/13.

Accession Number: 20130508–5092.

Comments Due: 5 p.m. ET 5/29/13.

The filings are accessible in the Commission's eLibrary system by clicking on the links or querying the docket number.

Any person desiring to intervene or protest in any of the above proceedings must file in accordance with Rules 211 and 214 of the Commission's Regulations (18 CFR 385.211 and 385.214) on or before 5:00 p.m. Eastern time on the specified comment date. Protests may be considered, but intervention is necessary to become a party to the proceeding.

eFiling is encouraged. More detailed information relating to filing requirements, interventions, protests, service, and qualifying facilities filings can be found at: *http://www.ferc.gov/docs-filing/efiling/filing-req.pdf.* For other information, call (866) 208–3676 (toll free). For TTY, call (202) 502–8659.

Dated: May 8, 2013.

Nathaniel J. Davis, Sr.,

Deputy Secretary.

[FR Doc. 2013–11804 Filed 5–16–13; 8:45 am]

BILLING CODE 6717–01–P

DEPARTMENT OF ENERGY

Federal Energy Regulatory Commission

Combined Notice of Filings

Take notice that the Commission has received the following Natural Gas Pipeline Rate and Refund Report filings:

Filings Instituting Proceedings

Docket Numbers: RP13–895–000.

Applicants: Texas Gas Transmission, LLC.

Description: Amendment to Neg Rate Agmt (Cross Timbers 31116–2) to be effective 5/8/2013.

Filed Date: 5/8/13.

Accession Number: 20130508–5055.

Comments Due: 5 p.m. ET 5/20/13.

Docket Numbers: RP13–896–000.

Applicants: Gulf South Pipeline Company, LP.

Description: Amendments to Neg Rate Agmt (FP&L 40097–1, 2) to be effective 4/1/2013.

Filed Date: 5/8/13.

Accession Number: 20130508–5097.

Comments Due: 5 p.m. ET 5/20/13.

Docket Numbers: RP13–897–000.

Applicants: Saltville Gas Storage Company L.L.C.

Description: Negotiated Rate Clean-up Filing to be effective 6/10/2013.

Filed Date: 5/9/13.

Accession Number: 20130509–5031.

Comments Due: 5 p.m. ET 5/21/13.

Any person desiring to intervene or protest in any of the above proceedings must file in accordance with Rules 211 and 214 of the Commission's Regulations (18 CFR 385.211 and 385.214) on or before 5:00 p.m. Eastern time on the specified comment date. Protests may be considered, but intervention is necessary to become a party to the proceeding.

Filings in Existing Proceedings

Docket Numbers: RP13–118–003.

Applicants: Columbia Gulf Transmission, LLC.

Description: NAESB Waiver Removal to be effective 12/1/2012.

Filed Date: 5/8/13.

Accession Number: 20130508–5076.

Comments Due: 5 p.m. ET 5/20/13.

Docket Numbers: RP13–124–004.

Applicants: Hardy Storage Company, LLC.

Description: NAESB Waiver Removal to be effective 12/1/2012.

Filed Date: 5/9/13.

Accession Number: 20130509–5010.

Comments Due: 5 p.m. ET 5/21/13.

Docket Numbers: RP13–784–001.

Applicants: Elba Express Company, L.L.C.

Description: Negotiated Rate Compliance Filing to be effective 4/1/2013.

Filed Date: 5/10/13.

Accession Number: 20130510–5023.

Comments Due: 5 p.m. ET 5/22/13.

Any person desiring to protest in any the above proceedings must file in accordance with Rule 211 of the Commission's Regulations (18 CFR 385.211) on or before 5:00 p.m. Eastern time on the specified comment date.

The filings are accessible in the Commission's eLibrary system by clicking on the links or querying the docket number.

eFiling is encouraged. More detailed information relating to filing requirements, interventions, protests, and service can be found at: *http://www.ferc.gov/docs-filing/efiling/filing-req.pdf.* For other information, call (866) 208–3676 (toll free). For TTY, call (202) 502–8659.

Dated: May 10, 2013.

Nathaniel J. Davis, Sr.

Deputy Secretary

[FR Doc. 2013–11807 Filed 5–16–13; 8:45 am]

BILLING CODE 6717–01–P

DEPARTMENT OF ENERGY

Federal Energy Regulatory Commission

[Docket No. ER13–1441–000]

Solar Star California XIX, LLC; Supplemental Notice that Initial Market-Based Rate Filing Includes Request for Blanket Section 204 Authorization

This is a supplemental notice in the above-referenced proceeding, of Solar Star California XIX, LLC's application for market-based rate authority, with an accompanying rate schedule, noting that such application includes a request for blanket authorization, under 18 CFR part 34, of future issuances of securities and assumptions of liability.

Any person desiring to intervene or to protest should file with the Federal Energy Regulatory Commission, 888 First Street NE., Washington, DC 20426, in accordance with Rules 211 and 214 of the Commission's Rules of Practice and Procedure (18 CFR 385.211 and 385.214). Anyone filing a motion to intervene or protest must serve a copy of that document on the Applicant.

Notice is hereby given that the deadline for filing protests with regard to the applicant's request for blanket authorization, under 18 CFR part 34, of future issuances of securities and assumptions of liability is May 30, 2013.

The Commission encourages electronic submission of protests and interventions in lieu of paper, using the FERC Online links at *http://www.ferc.gov*. To facilitate electronic service, persons with Internet access who will eFile a document and/or be listed as a contact for an intervenor must create and validate an eRegistration account using the eRegistration link. Select the eFiling link to log on and submit the intervention or protests.

Persons unable to file electronically should submit an original and 5 copies of the intervention or protest to the Federal Energy Regulatory Commission, 888 First Street NE., Washington, DC 20426.

The filings in the above-referenced proceeding(s) are accessible in the Commission's eLibrary system by clicking on the appropriate link in the above list. They are also available for review in the Commission's Public Reference Room in Washington, DC. There is an eSubscription link on the Web site that enables subscribers to receive email notification when a document is added to a subscribed docket(s). For assistance with any FERC Online service, please email

FERCOnlineSupport@ferc.gov. or call (866) 208–3676 (toll free). For TTY, call (202) 502–8659.

Dated: May 10, 2013.

Nathaniel J. Davis, Sr.,

Deputy Secretary.

[FR Doc. 2013–11809 Filed 5–16–13; 8:45 am]

BILLING CODE 6717–01–P

DEPARTMENT OF ENERGY

Federal Energy Regulatory Commission

[Docket No. ER13–1440–000]

Electricity MASS, LLC; Supplemental Notice that Initial Market-Based Rate Filing Includes Request for Blanket Section 204 Authorization

This is a supplemental notice in the above-referenced proceeding, of Electricity MASS, LLC's application for market-based rate authority, with an accompanying rate schedule, noting that such application includes a request for blanket authorization, under 18 CFR part 34, of future issuances of securities and assumptions of liability.

Any person desiring to intervene or to protest should file with the Federal Energy Regulatory Commission, 888 First Street NE., Washington, DC 20426, in accordance with Rules 211 and 214 of the Commission's Rules of Practice and Procedure (18 CFR 385.211 and 385.214). Anyone filing a motion to intervene or protest must serve a copy of that document on the Applicant.

Notice is hereby given that the deadline for filing protests with regard to the applicant's request for blanket authorization, under 18 CFR part 34, of future issuances of securities and assumptions of liability is May 30, 2013.

The Commission encourages electronic submission of protests and interventions in lieu of paper, using the FERC Online links at *http://www.ferc.gov.* To facilitate electronic service, persons with Internet access who will eFile a document and/or be listed as a contact for an intervenor must create and validate an eRegistration account using the eRegistration link. Select the eFiling link to log on and submit the intervention or protests.

Persons unable to file electronically should submit an original and 5 copies of the intervention or protest to the Federal Energy Regulatory Commission, 888 First Street NE., Washington, DC 20426.

The filings in the above-referenced proceeding(s) are accessible in the Commission's eLibrary system by clicking on the appropriate link in the above list. They are also available for review in the Commission's Public Reference Room in Washington, DC. There is an eSubscription link on the Web site that enables subscribers to receive email notification when a document is added to a subscribed docket(s). For assistance with any FERC Online service, please email *FERCOnlineSupport@ferc.gov.* or call (866) 208–3676 (toll free). For TTY, call (202) 502–8659.

Dated: May 10, 2013.

Nathaniel J. Davis, Sr.,

Deputy Secretary.

[FR Doc. 2013–11808 Filed 5–16–13; 8:45 am]

BILLING CODE 6717–01–P

DEPARTMENT OF ENERGY

Federal Energy Regulatory Commission

[Docket No. ER13–1442–000]

Solar Star California XX, LLC; Supplemental Notice that Initial Market-Based Rate Filing Includes Request for Blanket Section 204 Authorization

This is a supplemental notice in the above-referenced proceeding, of Solar Star California XX, LLC's application for market-based rate authority, with an accompanying rate schedule, noting that such application includes a request for blanket authorization, under 18 CFR part 34, of future issuances of securities and assumptions of liability.

Any person desiring to intervene or to protest should file with the Federal Energy Regulatory Commission, 888 First Street NE., Washington, DC 20426, in accordance with Rules 211 and 214 of the Commission's Rules of Practice and Procedure (18 CFR 385.211 and 385.214). Anyone filing a motion to intervene or protest must serve a copy of that document on the Applicant.

Notice is hereby given that the deadline for filing protests with regard to the applicant's request for blanket authorization, under 18 CFR part 34, of future issuances of securities and assumptions of liability is May 30, 2013.

The Commission encourages electronic submission of protests and interventions in lieu of paper, using the FERC Online links at *http://www.ferc.gov.* To facilitate electronic service, persons with Internet access who will eFile a document and/or be listed as a contact for an intervenor must create and validate an eRegistration account using the eRegistration link. Select the eFiling link to log on and submit the intervention or protests.

Persons unable to file electronically should submit an original and 5 copies of the intervention or protest to the Federal Energy Regulatory Commission, 888 First Street NE., Washington, DC 20426.

The filings in the above-referenced proceeding(s) are accessible in the Commission's eLibrary system by clicking on the appropriate link in the above list. They are also available for review in the Commission's Public Reference Room in Washington, DC. There is an eSubscription link on the Web site that enables subscribers to receive email notification when a document is added to a subscribed docket(s).

For assistance with any FERC Online service, please email *FERCOnlineSupport@ferc.gov.* or call (866) 208–3676 (toll free). For TTY, call (202) 502–8659.

Dated: May 10, 2013.

Nathaniel J. Davis, Sr.,

Deputy Secretary.

[FR Doc. 2013–11802 Filed 5–16–13; 8:45 am]

BILLING CODE 6717–01–P

ENVIRONMENTAL PROTECTION AGENCY

[ER–FRL–9009–2]

Environmental Impacts Statements; Notice of Availability

Responsible Agency: Office of Federal Activities, General Information (202) 564–7146 or *http://www.epa.gov/compliance/nepa/.*

Weekly receipt of Environmental Impact Statements Filed 05/06/2013 Through 05/10/2013.

Pursuant to 40 CFR 1506.9.

Notice

Section 309(a) of the Clean Air Act requires that EPA make public its comments on EISs issued by other Federal agencies. EPA's comment letters on EISs are available at: *http://www.epa.gov/compliance/nepa/eisdata.html.*

SUPPLEMENTARY INFORMATION: Due to EPA's agency-wide furlough day on Friday, May 24th and the Federal holiday on Monday, May 27th, all EISs must be filed with EPA by Thursday, May 23rd by 5:00 pm Eastern Time for publication under a Notice of Availability in the **Federal Register** for Friday, May 31st.

EIS No. 20130125, Draft Supplement, FTA, CA, Mid-Coast Corridor Transit

Project, Comment Period Ends: 07/17/2013, Contact: Mary Nguyen 213–202–3960.

EIS No. 20130126, Final EIS, BLM, AZ, Mohave County Wind Farm Project, Review Period Ends: 06/17/2013, Contact: Jackie Neckels 602–417–9262.

EIS No. 20130127, Draft EIS, NMFS, AK, Steller Sea Lion Protection Measures for Groundfish Fisheries in the Bering Sea and Aleutian Islands Management Area, Comment Period Ends: 07/16/2013, Contact: Melanie Brown 907–586–7228.

EIS No. 20130128, Final EIS, USFS, MT, Pilgrim Timber Sale Project, Kootenai National Forest, Review Period Ends: 06/17/2013, Contact: Doug Grupenhoff 406–827–0741.

EIS No. 20130129, Draft EIS, USA, TX, Implementation of Energy, Water, and Solid Waste Sustainability Initiatives at Fort Bliss, Texas and New Mexico, Comment Period Ends: 07/01/2013, Contact: Pamela M. Klinger 210–466–1595.

EIS No. 20130130, Draft EIS, USFS, WY, Clinker Mining Addition Project, Medicine Bow-Routt National Forests and Thunder Basin National Grassland, Comment Period Ends: 07/01/2013, Contact: Amy Ormseth 307–358–4690

Dated: May 14, 2013.

Cliff Rader,

Director, NEPA Compliance Division, Office of Federal Activities.

[FR Doc. 2013–11823 Filed 5–16–13; 8:45 am]

BILLING CODE 6560–50–P

ENVIRONMENTAL PROTECTION AGENCY

[FRL–9814–6] (EPA–HQ–OA–2013–0124)

Good Neighbor Environmental Board; Notification of Public Advisory Committee Teleconference

AGENCY: Environmental Protection Agency (EPA).

ACTION: Notice. Public Advisory Committee Teleconference.

SUMMARY: Pursuant to the Federal Advisory Committee Act, Public Law 92–463, notice is hereby given that the Good Neighbor Environmental Board (GNEB) will hold a public teleconference on Tuesday, June 4, 2013, Tuesday, August 6, 2013, and Tuesday, October 1, 2013. Each meeting will take place from 12 p.m. to 4 p.m. Eastern Standard Time. The meeting is open to the public. For further information regarding the teleconference and background materials, please contact Mark Joyce at the number listed below.

DATES: Tuesday, June 4, 2013, Tuesday, August 6, 2013, and Tuesday, October 1, 2013. Each meeting will take place from 12 p.m. to 4 p.m. Eastern Standard Time.

SUPPLEMENTARY INFORMATION:

Background: GNEB is a federal advisory committee chartered under the Federal Advisory Committee Act, Public Law 92463. GNEB provides advice and recommendations to the President and Congress on environmental and infrastructure issues along the U.S. border with Mexico.

Purpose of Meeting: The purpose of each of these teleconferences will be to discuss the Good Neighbor Environmental Board's Sixteenth Report. The report will focus on ecological restoration in the U.S.-Mexico border region.

General Information: The agenda and meeting materials will be available at *http://www.regulations.gov* under Docket ID: EPA–HQ–OA–2013–0124. General information about GNEB can be found on its Web site at *www.epa.gov/ofacmo/gneb*.

If you wish to make oral comments or submit written comments to the Board, please contact Mark Joyce at least five days prior to the meeting. Written comments should be submitted at *http://www.regulations.gov* under Docket ID: EPA–HQ–OA–2013–0124.

Meeting Access: For information on access or services for individuals with disabilities, please contact Mark Joyce at (202) 564–2130 or email at *joyce.mark@epa.gov*. To request accommodation of a disability, please contact Mark Joyce at least 10 days prior to the meeting to give EPA as much time as possible to process your request.

Dated: May 7, 2013.

Mark Joyce,

Acting Designated Federal Officer.

[FR Doc. 2013–11873 Filed 5–16–13; 8:45 am]

BILLING CODE 6560–50–P

ENVIRONMENTAL PROTECTION AGENCY

[EPA–HQ–OPP–2013–0536; FRL–9385–5]

Environmental Management Resources, Inc.; Transfer of Data

AGENCY: Environmental Protection Agency (EPA).

ACTION: Notice.

SUMMARY: This notice announces that pesticide related information submitted to EPA's Office of Pesticide Programs pursuant to the Federal Insecticide, Fungicide, and Rodenticide Act (FIFRA) and the Federal Food, Drug, and Cosmetic Act (FFDCA), including information that may have been claimed as Confidential Business Information (CBI) by the submitter, will be transferred to Environmental Management Resources, Inc. Environmental Management Resources, Inc. has been awarded a contract to perform work for OPP, and access to this information will enable Environmental Management Resources, Inc. to fulfill the obligations of the contract.

DATES: Environmental Management Resources, Inc. will be given access to this information on or before May 22, 2013.

FOR FURTHER INFORMATION CONTACT: Mario Steadman, Information Technology and Resources Management Division (7502P), Office of Pesticide Programs, Environmental Protection Agency, 1200 Pennsylvania Ave. NW., Washington, DC 20460–0001; telephone number: (703) 305–8338, *steadman.mario@epa.gov.*

SUPPLEMENTARY INFORMATION:

I. General Information

A. Does this Action Apply to Me?

This action applies to the public in general. As such, the Agency has not attempted to describe all the specific entities that may be affected by this action. If you have any questions regarding the applicability of this action to a particular entity, consult the person listed under **FOR FURTHER INFORMATION CONTACT**.

B. How Can I Get Copies of this Document and Other Related Information?

EPA has established a docket for this action under docket identification (ID) number EPA–HQ–OPP–2013–0536. Publicly available docket materials are available either in the electronic docket at *http://www.regulations.gov,* or, if only available in hard copy, at the Office of Pesticide Programs (OPP) Regulatory Public Docket in Rm. S–4400, One Potomac Yard (South Bldg.), 2777 S. Crystal Dr., Arlington, VA. The hours of operation of this Docket Facility are from 8:30 a.m. to 4 p.m., Monday through Friday, excluding legal holidays. The Docket Facility telephone number is (703) 305–5805.

II. Contractor Requirements

Under contract number, EP–D–08–089, the contractor will perform the following: Environmental Management Resources, Inc. shall perform technical

toxicological and ecological research support services for the U.S. EPA, ORD/NHEERL Mid-Continent Ecology Division (MED), Duluth, Minnesota.

1. Perform chemical analysis of effluents, ambient waters, spiked water (toxicity bioassays), leachates, sediments, and tissues.

2. Develop logistical plans, applying to ecological assessment in the field to implement sampling, and biological and/or chemical analysis at remote sites.

3. Conduct those tasks as assigned in Work Assignments.

4. Plan and conduct scientific meetings and seminars.

5. Conduct quality assurance on EPA test data, which may be suitable for model or benchmark development.

This contract involves no subcontractors.

OPP has determined that the contract described in this document involves work that is being conducted in connection with FIFRA, in that pesticide chemicals will be the subject of certain evaluations to be made under this contract. These evaluations may be used in subsequent regulatory decisions under FIFRA.

Some of this information may be entitled to confidential treatment. The information has been submitted to EPA under sections 3, 4, 6, and 7 of FIFRA and under sections 408 and 409 of FFDCA.

In accordance with the requirements of 40 CFR 2.307(h)(3) and 2.308(i)(2), the contract with Environmental Management Resources, Inc., prohibits use of the information for any purpose not specified in this contract; prohibits disclosure of the information to a third party without prior written approval from the Agency; and requires that each official and employee of the contractor sign an agreement to protect the information from unauthorized release and to handle it in accordance with the *FIFRA Information Security Manual.* In addition, Environmental Management Resources, Inc. is required to submit for EPA approval a security plan under which any CBI will be secured and protected against unauthorized release or compromise. No information will be provided to Environmental Management Resources, Inc., until the requirements in this document have been fully satisfied. Records of information provided to Environmental Management Resources, Inc. will be maintained by EPA Project Officers for this contract. All information supplied to Environmental Management Resources, Inc. by EPA for use in connection with this contract will be returned to EPA when Environmental Management Resources, Inc. has completed its work.

List of Subjects

Environmental protection, Business and industry, Government contracts, Government property, Security measures.

Dated: April 30, 2013.

Oscar Morales,

Director, Information Technology and Resources Management Division, Office of Pesticide Programs.

[FR Doc. 2013–11825 Filed 5–16–13; 8:45 am]

BILLING CODE 6560–50–P

FEDERAL COMMUNICATIONS COMMISSION

Information Collection(s) Being Reviewed by the Federal Communications Commission, Comments Requested

AGENCY: Federal Communications Commission.

ACTION: Notice; request for comments.

SUMMARY: As part of its continuing effort to reduce paperwork burden and as required by the Paperwork Reduction Act (PRA) of 1995 (44 U.S.C. 3501–3520), the Federal Communications Commission invites the general public and other Federal agencies to take this opportunity to comment on the following information collection(s). Comments are requested concerning: whether the proposed collection of information is necessary for the proper performance of the functions of the Commission, including whether the information shall have practical utility; the accuracy of the Commission's burden estimate; ways to enhance the quality, utility, and clarity of the information collected; ways to minimize the burden of the collection of information on the respondents, including the use of automated collection techniques or other forms of information technology; and ways to further reduce the information burden for small business concerns with fewer than 25 employees.

The FCC may not conduct or sponsor a collection of information unless it displays a currently valid OMB control number. No person shall be subject to any penalty for failing to comply with a collection of information subject to the Paperwork Reduction Act (PRA) that does not display a valid OMB control number.

DATES: Written Paperwork Reduction Act (PRA) comments should be submitted on or before July 16, 2013. If you anticipate that you will be submitting PRA comments, but find it difficult to do so within the period of time allowed by this notice, you should advise the FCC contact listed below as soon as possible.

ADDRESSES: Submit your PRA questions to Judith B. Herman, Federal Communications Commission, via the Internet at *Judith-b.herman@fcc.gov.* To submit your PRA comments by email send them to: *PRA@fcc.gov.*

FOR FURTHER INFORMATION CONTACT: Judith B. Herman, Office of Managing Director, (202) 418–0214.

SUPPLEMENTARY INFORMATION:

OMB Control Number: 3060–XXXX.

Title: Survey for Urban Rates for Fixed Voice and Fixed Broadband Residential Services.

Form Number: N/A.

Type of Review: New collection.

Respondents: Business or other for-profit entities.

Number of Respondents: 1,000 respondents; 1,000 responses.

Estimated Time per Response: 3.5 hours.

Frequency of Response: Annual reporting requirement.

Obligation to Respond: Mandatory. Statutory authority for this information collection is contained in 47 U.S.C. section 254 of the Communications Act of 1934, as amended (Section 254(g) was added by Section 101(a) of the 1996 Telecommunications Act).

Total Annual Burden: 3,500 hours.

Total Annual Cost: N/A.

Privacy Impact Assessment: N/A.

Nature and Extent of Confidentiality: The information being collected is not confidential and no assurances of confidentiality are being provided.

Needs and Uses: The Commission will submit this new information collection after this comment period to obtain the full, three year clearance from the Office of Management and Budget (OMB). To implement certain reforms to universal service support, the Commission's Wireline Competition Bureau and the Wireless Telecommunications Bureau in an Order, DA 13–598, adopted the form and content for a survey of urban rates for fixed voice and fixed broadband residential services. The information collected in this survey will be used to establish a rate floor that eligible telecommunications carriers (ETCs) receiving high-cost loop support (HCLS) or frozen high-cost support must meet to receive their full support amounts and to help ensure that universal service support recipients offering fixed voice and broadband services do so at reasonably comparable rates to those in urban areas.

Specifically, the Commission directed the Bureaus to ''develop a methodology

to survey a representative sample of facilities-based fixed voice service providers taking into account the relative categories of fixed voice providers as determined in the most recent FCC Form 477 data collection.'' The Commission also delegated ''authority to conduct an annual survey, in order to specify an appropriate minimum for usage allowances and to adjust such a minimum over time.''

Federal Communications Commission.

Gloria J. Miles,

Federal Register Liaison, Office of the Secretary, Office of Managing Director.

[FR Doc. 2013–11797 Filed 5–16–13; 8:45 am]

BILLING CODE 6712–01–P

FEDERAL DEPOSIT INSURANCE CORPORATION

Update to Notice of Financial Institutions for Which the Federal Deposit Insurance Corporation Has Been Appointed Either Receiver, Liquidator, or Manager

AGENCY: Federal Deposit Insurance Corporation.

ACTION: Update Listing of Financial Institutions in Liquidation.

SUMMARY: Notice is hereby given that the Federal Deposit Insurance Corporation (Corporation) has been appointed the sole receiver for the following financial institutions effective as of the Date Closed as indicated in the listing. This list (as updated from time to time in the **Federal Register**) may be relied upon as ''of record'' notice that the Corporation has been appointed receiver for purposes of the statement of policy published in the July 2, 1992 issue of the **Federal Register** (57 FR 29491). For further information concerning the identification of any institutions which have been placed in liquidation, please visit the Corporation Web site at *www.fdic.gov/bank/individual/failed/banklist.html* or contact the Manager of Receivership Oversight in the appropriate service center.

Dated: May 13, 2013.

Federal Deposit Insurance Corporation.

Pamela Johnson,

Regulatory Editing Specialist.

INSTITUTIONS IN LIQUIDATION

[In alphabetical order]

FDIC Ref. No.	Bank name	City	State	Date closed
10480	Pisgah Community Bank	Asheville	NC	5/10/2013
10481	Sunrise Bank	Valdosta	GA	5/10/2013

[FR Doc. 2013–11771 Filed 5–16–13; 8:45 am]

BILLING CODE 6714–01–P

FEDERAL RESERVE SYSTEM

Notice of Proposals to Engage in or to Acquire Companies Engaged in Permissible Nonbanking Activities

The companies listed in this notice have given notice under section 4 of the Bank Holding Company Act (12 U.S.C. 1843) (BHC Act) and Regulation Y, (12 CFR part 225) to engage *de novo,* or to acquire or control voting securities or assets of a company, including the companies listed below, that engages either directly or through a subsidiary or other company, in a nonbanking activity that is listed in § 225.28 of Regulation Y (12 CFR 225.28) or that the Board has determined by Order to be closely related to banking and permissible for bank holding companies. Unless otherwise noted, these activities will be conducted throughout the United States.

Each notice is available for inspection at the Federal Reserve Bank indicated. The notice also will be available for inspection at the offices of the Board of Governors. Interested persons may express their views in writing on the question whether the proposal complies with the standards of section 4 of the BHC Act.

Unless otherwise noted, comments regarding the applications must be received at the Reserve Bank indicated or the offices of the Board of Governors not later than June 13, 2013.

A. Federal Reserve Bank of Atlanta (Chapelle Davis, Assistant Vice President) 1000 Peachtree Street NE., Atlanta, Georgia 30309:

1. *HCBF Holding Company, Inc.,* Fort Pierce, Florida; to acquire 100 percent of the voting shares of BSA Financial Services, Inc., and indirectly acquire Bank of St. Augustine, both in St. Augustine, Florida, and thereby engage in operating a savings association, pursuant to section 225.28(b)(4)(ii).

Board of Governors of the Federal Reserve System, May 14, 2013.

Margaret McCloskey Shanks,

Deputy Secretary of the Board.

[FR Doc. 2013–11820 Filed 5–16–13; 8:45 am]

BILLING CODE 6210–01–P

DEPARTMENT OF HEALTH AND HUMAN SERVICES

HIT Standards Committee; Schedule for the Assessment of HIT Policy Committee Recommendations

AGENCY: Office of the National Coordinator for Health Information Technology, HHS.

ACTION: Notice.

SUMMARY: Section 3003(b)(3) of the American Recovery and Reinvestment Act of 2009 mandates that the HIT Standards Committee develop a schedule for the assessment of policy recommendations developed by the HIT Policy Committee and publish it in the **Federal Register**. This notice fulfills the requirements of Section 3003(b)(3) and updates the schedule posted in the **Federal Register** on April 11, 2012. In anticipation of receiving recommendations originally developed by the HIT Policy Committee, the HIT Standards Committee has created six (6) workgroups to analyze the areas of clinical quality, clinical operations, implementation, consumer technology, nationwide health information networks and privacy and security. Other groups will be convened to address specific issues as needed.

HIT Standards Committee's Schedule for the Assessment of HIT Policy Committee Recommendations is as follows:

The National Coordinator will establish priority areas based in part on recommendations received from the HIT Policy Committee regarding health information technology standards, implementation specifications, and/or certification criteria. Once the HIT Standards Committee is informed of those priority areas, it will:

(A) Direct the appropriate workgroup or other special group to develop a report for the HIT Standards Committee, to the extent possible, within 90 days, which will include, among other items, the following:

(1) An assessment of what standards, implementation specifications, and

certification criteria are currently available to meet the priority area;

(2) an assessment of where gaps exist (*i.e.,* no standard is available or harmonization is required because more than one standard exists) and identify potential organizations that have the capability to address those gaps; and

(3) a timeline, which may also account for NIST testing, where appropriate, and include dates when the HIT Standards Committee is expected to issue recommendation(s) to the National Coordinator.

(B) Upon receipt of a report from a workgroup or other special group, the HIT Standards Committee will:

(1) accept the timeline provided by the subcommittee, and, if necessary, revise it; and

(2) assign subcommittee(s) to conduct research and solicit testimony, where appropriate, and issue recommendations to the full committee in a timely manner.

(C) Advise the National Coordinator, consistent with the accepted timeline in (B)(1) and after NIST testing, where appropriate, on standards, implementation specifications, and/or certification criteria, for the National Coordinator's review and determination whether or not to endorse the recommendations, and possible adoption of the proposed recommendations by the Secretary of the Department of Health and Human Services.

The standards and related topics which the HIT Standards Committee is expected to address over the coming year include, but may not be limited to standards to support: Transport of data to and from patients, image exchange, current content gaps, securing data at rest, digital signature, longitudinal record sharing, advanced care preferences, application programming interfaces, measuring and reporting quality, clinical decision support, defect reporting and registry support.

For a listing of upcoming HIT Standards Committee meetings, please visit the ONC Web site at *http://healthit.gov.*

Notice of this schedule is given under the American Recovery and Reinvestment Act of 2009 (Pub. L. 111–5), section 3003.

Dated: May 8, 2013.

MacKenzie Robertson,

FACA Program Director, Office of Policy and Planning, Office of the National Coordinator for Health Information Technology.

[FR Doc. 2013–11740 Filed 5–16–13; 8:45 am]

BILLING CODE 4150–45–P

DEPARTMENT OF HEALTH AND HUMAN SERVICES

HIT Standards Committee Advisory Meeting

AGENCY: Office of the National Coordinator for Health Information Technology, HHS.

ACTION: Notice of meeting.

This notice announces a forthcoming meeting of a public advisory committee of the Office of the National Coordinator for Health Information Technology (ONC). The meeting will be open to the public.

Name of Committee: HIT Standards Committee.

General Function of the Committee: To provide recommendations to the National Coordinator on standards, implementation specifications, and certification criteria for the electronic exchange and use of health information for purposes of adoption, consistent with the implementation of the Federal Health IT Strategic Plan, and in accordance with policies developed by the HIT Policy Committee.

Date and Time: The meeting will be held on June 19, 2013, from 9:00 a.m. to 3:00 p.m. Eastern Time. This is a change from the previously announced date of June 20, 2013.

Location: TBD. For up-to-date information, go to the ONC Web site, *http://healthit.gov*.

Contact Person: MacKenzie Robertson, Office of the National Coordinator, HHS, 355 E Street SW., Washington, DC 20201, 202–205–8089, Fax: 202–260–1276, email: *mackenzie.robertson@hhs.gov*. Please call the contact person for up-to-date information on this meeting. A notice in the **Federal Register** about last minute modifications that impact a previously announced advisory committee meeting cannot always be published quickly enough to provide timely notice.

Agenda: The committee will hear reports from its workgroups and updates from ONC and other Federal agencies. ONC intends to make background material available to the public no later than two (2) business days prior to the meeting. If ONC is unable to post the background material on its Web site prior to the meeting, it will be made publicly available at the location of the advisory committee meeting, and the background material will be posted on ONC's Web site after the meeting, at *http://healthit.gov*.

Procedure: ONC is committed to the orderly conduct of its advisory committee meetings. Interested persons may present data, information, or views, orally or in writing, on issues pending before the Committee. Written submissions may be made to the contact person on or before two days prior to the Committee's meeting date. Oral comments from the public will be scheduled in the agenda. Time allotted for each presentation will be limited to three minutes. If the number of speakers requesting to comment is greater than can be reasonably accommodated during the scheduled public comment period, ONC will take written comments after the meeting until close of business on that day.

Persons attending ONC's advisory committee meetings are advised that the agency is not responsible for providing access to electrical outlets.

ONC welcomes the attendance of the public at its advisory committee meetings. Seating is limited at the location, and ONC will make every effort to accommodate persons with physical disabilities or special needs. If you require special accommodations due to a disability, please contact MacKenzie Robertson at least seven (7) days in advance of the meeting.

Notice of this meeting is given under the Federal Advisory Committee Act (Pub. L. 92–463, 5 U.S.C., App. 2).

Dated: May 10, 2013.

MacKenzie Robertson,

FACA Program Lead, Office of Policy and Planning, Office of the National Coordinator for Health Information Technology.

[FR Doc. 2013–11742 Filed 5–16–13; 8:45 am]

BILLING CODE 4150–45–P

DEPARTMENT OF HEALTH AND HUMAN SERVICES

Centers for Medicare & Medicaid Services

[Document Identifiers: CMS–10053, CMS–R–142, CMS–10066, CMS–R–193, CMS–10464 and CMS–588]

Agency Information Collection Activities: Submission for OMB Review; Comment Request

AGENCY: Centers for Medicare & Medicaid Services, HHS.

In compliance with the requirement of section 3506(c)(2)(A) of the Paperwork Reduction Act of 1995, the Centers for Medicare & Medicaid Services (CMS), Department of Health and Human Services, is publishing the following summary of proposed collections for public comment. Interested persons are invited to send comments regarding this burden estimate or any other aspect of this collection of information, including any of the following subjects: (1) The

necessity and utility of the proposed information collection for the proper performance of the Agency's function; (2) the accuracy of the estimated burden; (3) ways to enhance the quality, utility, and clarity of the information to be collected; and (4) the use of automated collection techniques or other forms of information technology to minimize the information collection burden.

1. *Type of Information Collection Request:* Extension of a currently approved collection; *Title of Information Collection:* Paid Feeding Assistants in Long-Term Care Facilities and Supporting Regulations at 42 CFR 483.160; *Use:* In accordance with 42 CFR part 483, long-term care facilities are permitted to use paid feeding assistants to supplement the services of certified nurse aides. If facilities choose this option, feeding assistants must complete a training program. Nursing home providers are expected to maintain a record of all individuals used by the facility as paid feeding assistants. *Form Number:* CMS–10053 (OCN: 0938–0916); *Frequency:* Occasionally; *Affected Public:* Private Sector—Business or other for-profit and not-for-profit institutions; *Number of Respondents:* 4,250; *Total Annual Responses:* 4,250; *Total Annual Hours:* 25,500. (For policy questions regarding this collection contact Shelly Ray at 410–786–7884. For all other issues call 410–786–1326.)

2. *Type of Information Collection Request:* Extension without change of a currently approved collection; *Title of Information Collection:* Examination and Treatment for Emergency Medical Conditions and Women in Labor (EMTALA), 42 CFR 482.12, 488.18, 489.20, and 489.24; *Use:* In accordance with 42 CFR 488.18, 489.20 and 489.24, during Medicare surveys of hospitals and state agencies, CMS will review hospital records for lists of on-call physicians. CMS will also review and obtain the information which must be recorded in hospital medical records for individuals with emergency medical conditions and women in labor. The emergency department reporting the information, Medicare participating hospitals and Medicare state survey agencies must forward the information to CMS. Additionally, CMS will use the Quality Improvement Organizations Report assessing whether an individual had an emergency condition and whether the individual was stabilized to determine whether to impose a civil monetary penalty or physician exclusion sanctions. Without such information, CMS will be unable to make the hospital emergency services compliance determinations as required under sections 1154, 1866 and 1867 of the Consolidated Omnibus Budget Reconciliation Act (COBRA) of 1985. *Form Number:* CMS–R–142 (OCN: 0938–0667). *Frequency:* Occasionally; *Affected Public:* Private Sector (business or other for-profit and not-for-profit institutions); *Number of Respondents:* 6,149; *Total Annual Responses:* 6,149; *Total Annual Hours:* 6,149. (For policy questions regarding this collection contact Renate Dombrowski at 410–786–4645. For all other issues call 410–786–1326.)

3. *Type of Information Collection Request:* Extension of a currently approved collection; *Title of Information Collection:* Detailed Notice of Discharge (DND); *Use:* When a Medicare beneficiary requests a Quality Improvement Organization review of his/her inpatient hospital discharge, hospitals and Medicare plans have used the DND to provide the beneficiary with a detailed explanation regarding the reason for discharge. *Form Number:* CMS–10066 (OCN: 0938–1019). *Frequency:* Yearly. *Affected Public:* Private Sector—Business or other for-profit and not-for-profit institutions; *Number of Respondents:* 6,169; *Total Annual Responses:* 12,852; *Total Annual Hours:* 12,852. (For policy questions regarding this collection contact Evelyn Blaemire at 410–786–1803. For all other issues call 410–786–1326.)

4. *Type of Information Collection Request:* Extension of a currently approved collection; *Title of Information Collection:* Important Message from Medicare (IM); *Use:* Hospitals have used the Important Message from Medicare (IM) to inform original Medicare, Medicare Advantage, and other Medicare plan beneficiaries who are hospital inpatients about their hospital rights and discharge rights. In particular, the IM provides information about when a beneficiary will and will not be liable for charges for a continued stay in a hospital and offers a detailed description of the Quality Improvement Organization review process. *Form Number:* CMS–R–193 (OCN: 0938–0692). *Frequency:* Yearly; *Affected Public:* Private Sector—Business or other for-profit and not-for-profit institutions; *Number of Respondents:* 6,169; *Total Annual Responses:* 19,840,000; *Total Annual Hours:* 2,976,000. (For policy questions regarding this collection contact Evelyn Blaemire at 410–786–1803. For all other issues call 410–786–1326.)

5. *Type of Information Collection Request:* New collection (Request for a new control number); *Title of Information Collection:* Agent/Broker Data Collection in Federally-facilitated Health Insurance Exchanges; *Use:* Both section 1312(e) of the Affordable Care Act and 45 CFR 155.220 permit states to allow agents and brokers to enroll qualified individuals, employers, and employees in QHPs, including through the Exchange; and assist individuals in applying for advance payments of the premium tax credit and cost-sharing reductions. Agents and brokers will serve as additional access points to the Exchange for individuals, SHOP employers or SHOP employees requiring or desiring agent and broker assistance.

In order to interface with the Federally-facilitated Exchange (FFE), agents and brokers must establish an account and obtain a user ID through the CMS Enterprise Portal. Additionally, agents and brokers must register for, and successfully complete, Exchange-specific training, which enforces their understanding of eligibility and enrollment requirements in Exchanges. Agents and brokers must also apply this understanding to the use or development of any non-Exchange Web site, such as an issuer's or web broker's Web site, used as a tool for enrollment. At the conclusion of training, agents and brokers will attest to adhere to FFE standards and requirements. Web-brokers will sign and submit a similar agreement.

We estimate that it will take approximately one-half hour (30 minutes) per applicant to complete all of the data collection activities associated with the process. They must register on-line for a training module; complete an on-line attestation (or, if they are web brokers sign and submit their agreement); and finally, if for some reason they choose to terminate their registration, complete and sign a termination notice. Collectively, these activities will take no more than 30 minutes.

We estimate that approximately 350,000 agents and brokers will seek to register to participate in the FFE. At an estimated 30 minutes (0.50 hours) per broker, that result in 175,000 hours of overall burden. According to the Bureau of Labor and Statistics, Insurance Sales Agents earned an average of $30.48 per hour in 2012. We factored that up by 3% for 2013 and 2014, for an average annual wage of $32.34. Applying that cost factor to the estimated 175,000 hours of burden yields an overall cost estimate of $5,659,500 for the first year of operation.

The 60-day **Federal Register** notice was published on February 7, 2013 (78 FR 9056). We received nine comments.

Of those nine comments, three were related to the information collection request and six were out of scope. Specifically, one commenter requested a process that would allow web-brokers to enroll people without reporting individual issuer appointments, and CMS made this revision to the registration process. We also received some questions about how the training process will work. We confirmed that agents and brokers will only need to register for the FFE once and that CMS will host the training program, as opposed to individual issuers. As a result of the comments, we modified both the registration process and simplified how agents and brokers would participate in the Exchanges to make it align more closely with how issuers, agents, and web-brokers currently do business. *Form Number:* CMS–10464 (OCN: 0938–NEW); *Frequency:* Annually; *Affected Public:* Private Sector—Business or Other For-Profit, Non-For-Profit Institutions, or Farms; *Number of Respondents:* 350,000; *Total Annual Responses:* 350,000; *Total Annual Hours:* 175,000 hours. (For policy questions regarding this collection contact Leigha Basini at 301–492–4307. For all other issues call 410–786–1326.)

6. *Type of Information Collection Request:* Revision of a currently approved collection. *Title of Information Collection:* Electronic Funds Transfers Authorization Agreement; *Use:* The primary function of the Electronic Funds Transfer Authorization Agreement (CMS 588) is to gather information from a provider/supplier to establish an electronic payment process.

The legal authority to collect this information is found in Section 1815(a) of the Social Security Act. This section provides authority for the Secretary of Health and Human Services to pay providers/suppliers of Medicare services. Under 31 U.S.C. 3332(f)(1), all federal payments, including Medicare payments to providers and suppliers, shall be made by electronic funds transfer. 31 U.S.C. 7701 (c) requires that any person or entity doing business with the federal government must provide their Tax Identification Number (TIN).

The goal of this submission is to renew the data collection. Only two minor revisions for systems requirements will be made at this time, specifically adding a street address line for the location of the financial institution and adding an additional National Provider Identification (NPI) number collection field for those providers/suppliers who have more than one NPI. *Form Number:* CMS–588 (OCN: 0938–0626); *Frequency:* Occasionally; *Affected Public:* Private Sector—Business or other for-profits and not-for-profit institutions; *Number of Respondents:* 94,000; *Total Annual Responses:* 94,000; *Total Annual Hours:* 23,500. (For policy questions regarding this collection contact Kim McPhillips at 410–786–5374. For all other issues call 410–786–1326.)

To obtain copies of the supporting statement and any related forms for the proposed paperwork collections referenced above, access CMS Web site address at *http://www.cms.hhs.gov/PaperworkReductionActof1995,* or Email your request, including your address, phone number, OMB number, and CMS document identifier, to *Paperwork@cms.hhs.gov,* or call the Reports Clearance Office on (410) 786–1326.

To be assured consideration, comments and recommendations for the proposed information collections must be received by the OMB desk officer at the address below, no later than 5 p.m. on June 17, 2013.

OMB, Office of Information and Regulatory Affairs, Attention: CMS Desk Officer, Fax Number: (202) 395–6974, Email: *OIRA_submission@omb.eop.gov.*

Dated: May 14, 2013.

Martique Jones,

Deputy Director, Regulations Development Group, Office of Strategic Operations and Regulatory Affairs.

[FR Doc. 2013–11811 Filed 5–16–13; 8:45 am]

BILLING CODE 4120–01–P

DEPARTMENT OF HEALTH AND HUMAN SERVICES

Centers for Medicare & Medicaid Services

[Document Identifiers: CMS–10088, CMS–10265, CMS–10477 and CMS–R–13]

Agency Information Collection Activities: Proposed Collection; Comment Request

AGENCY: Centers for Medicare & Medicaid Services, HHS.

In compliance with the requirement of section 3506(c)(2)(A) of the Paperwork Reduction Act of 1995, the Centers for Medicare & Medicaid Services (CMS) is publishing the following summary of proposed collections for public comment. Interested persons are invited to send comments regarding this burden estimate or any other aspect of this collection of information, including any of the following subjects: (1) The necessity and utility of the proposed information collection for the proper performance of the agency's functions; (2) the accuracy of the estimated burden; (3) ways to enhance the quality, utility, and clarity of the information to be collected; and (4) the use of automated collection techniques or other forms of information technology to minimize the information collection burden.

1. *Type of Information Collection Request:* Extension without change of a currently approved collection; *Title of Information Collection:* Notification of Fiscal Intermediaries (FIs) and CMS of Co-located Medicare Providers and Supporting Regulations in 42 CFR 412.22 and 412.532; *Use:* Many long-term care hospitals (LTCHs) are co-located with other Medicare providers (acute care hospitals, inpatient rehabilitation facilities (IRFs), skilled nursing facilities (SNFs), and psychiatric facilities), which leads to potential gaming of the Medicare system based on patient shifting. We are requiring LTCHs to notify fiscal intermediaries (FIs), Medicare administrative contractors (MACs), and CMS of co-located providers and establish policies to limit payment abuse that will be based on FIs and MACs tracking patient movement among these co-located providers 42 CFR 412.22(e)(6) and (h)(5).

Based upon being able to identify co-located providers, FIs, MACs, and CMS will be able to track patient shifting between LTCHs and other in-patient providers which will lead to appropriate payments under § 412.532. That section limits payments to LTCHs where over 5 percent of admissions represent patients who had been sequentially discharged by the LTCH, admitted to an on-site provider, and subsequently readmitted to the LTCH. Since each discharge triggers a Medicare payment, we implemented this policy to discourage payment abuse.

Form Number: CMS–10088 (OCN: 0938–0897); *Frequency:* Occasionally; *Affected Public:* Private Sector—Business or other for-profit and not-for-profit institutions; *Number of Respondents:* 25; *Total Annual Responses:* 25; *Total Annual Hours:* 6. (For policy questions regarding this collection contact Judy Richter at 410–786–2590. For all other issues call 410–786–1326.)

2. *Type of Information Collection Request:* Reinstatement with a change of a previously approved collection; *Title of Information Collection:* Mandatory Insurer Reporting Requirements of Section 111 of the Medicare, Medicaid and SCHIP Act of 2007; *Use:* Section

111 of the Medicare, Medicaid and SCHIP Extension Act of 2007 (Pub. L. 110–173) (MMSEA) amends the Medicare Secondary Payer (MSP) provisions of the Social Security Act (42 U.S.C. 1395y(b)) to provide for mandatory reporting by group health plan arrangements and by liability insurance (including self-insurance), no-fault insurance, and workers' compensation laws and plans. The law provides that, notwithstanding any other provision of law, the Secretary of Health and Human Services may implement this provision by program instruction or otherwise. The Secretary has elected not to implement the provision through rulemaking and will implement by publishing instructions on a publicly available Web site and submitting an information collection request to OMB for review and approval of the associated information collection requirements.

Effective January 1, 2009, as required by the MMSEA, an entity serving as an insurer or third party administrator for a group health plan and, in the case of a group health plan that is self-insured and self-administered, a plan administrator or fiduciary must: (1) Secure from the plan sponsor and plan participants such information as the Secretary may specify to identify situations where the group health plan is a primary plan to Medicare; and (2) report such information to the Secretary in the form and manner (including frequency) specified by the Secretary.

Effective July 1, 2009, as required by the MMSEA, ''applicable plans,'' must: (1) Determine whether a claimant is entitled to Medicare benefits; and, if so, (2) report the identity of such claimant and provide such other information as the Secretary may require to properly coordinate Medicare benefits with respect to such insurance arrangements in the form and manner (including frequency) as the Secretary may specify after the claim is resolved through a settlement, judgment, award or other payment (regardless of whether or not there is a determination or admission of liability). Applicable plan refers to the following laws, plans or other arrangements, including the fiduciary or administrator for such law, plan or arrangement: (1) Liability insurance (including self-insurance); (2) No-fault insurance; and (3) Workers' compensation laws or plans. As indicated, the Secretary has elected to implement this provision by publishing instructions at a Web site established for such purpose. The Web site is (*http://www.cms.hhs.gov/MandatoryInsRep/*). CMS shall use this Web site to publish preliminary guidance as well as the final instructions. The Web site also advises interested parties how to comment on the preliminary guidance. *Form Number:* CMS–10265 (OCN: 0938–1074); *Frequency:* Yearly; *Affected Public:* Private Sector—Business or other for-profits and not-for-profit institutions, State, Local or Tribal Governments; *Number of Respondents:* 22,647; *Total Annual Responses:* 22,647; *Total Annual Hours:* 333,130. (For policy questions regarding this collection contact Cynthia Ginsburg at 410–786–2579. For all other issues call 410–786–1326.)

3. *Type of Information Collection Request:* New Collection (Request for a new control number); *Title of Information Collection:* Medicaid Incentives for Prevention of Chronic Disease (MIPCD) Demonstration; *Use:* Under section 4108(d)(1) of the Affordable Care Act, the Centers for Medicare & Medicaid Services (CMS) is required to contract with an independent entity or organization to conduct an evaluation of the Medicaid Incentives for Prevention of Chronic Disease (MIPCD) demonstration. The contractor will conduct state site visits, two rounds of focus group discussions, interviews with key program stakeholders, and field a beneficiary satisfaction survey. Both the state site visits and interviews with key program stakeholders will entail one-on-one interviews; however each set will have a unique data collection form. Thus, each evaluation task listed above has a separate data collection form and this proposed information collection encompasses four data collection forms. The purpose of the evaluation and assessment includes determining the following:

- The effect of such initiatives on the use of health care services by Medicaid beneficiaries participating in the program;
- The extent to which special populations (including adults with disabilities, adults with chronic illnesses, and children with special health care needs) are able to participate in the program;
- The level of satisfaction of Medicaid beneficiaries with respect to the accessibility and quality of health care services provided through the program; and
- The administrative costs incurred by state agencies that are responsible for administration of the program.

Form Number: CMS–10477 (OCN: 0938–NEW); *Frequency:* Annually; *Affected Public:* Individuals and households, business and not-for-profits, State, Local or Tribal Governments; *Number of Respondents:* 4,524; *Total Annual Responses:* 4,524; *Total Annual Hours:* 1,795. (For policy questions regarding this collection contact Jean Scott at 410–786–6327. For all other issues call 410–786–1326.)

4. *Type of Information Collection Request:* Reinstatement with change of a previously approved collection; *Title of Information Collection:* Conditions of Coverage for Organ Procurement Organizations and Supporting Regulations in 42 CFR, Sections 486.301–.348; *Use:* Section 1138(b) of the Social Security Act, as added by section 9318 of the Omnibus Budget Reconciliation Act of 1986 (Pub. L. 99–509), sets forth the statutory qualifications and requirements that organ procurement organizations (OPOs) must meet in order for the costs of their services in procuring organs for transplant centers to be reimbursable under the Medicare and Medicaid programs. An OPO must be certified and designated by the Secretary as an OPO and must meet performance-related standards prescribed by the Secretary. The corresponding regulations are found at 42 CFR Part 486 (Conditions for Coverage of Specialized Services Furnished by Suppliers) under subpart G (Requirements for Certification and Designation and Conditions for Coverage: Organ Procurement Organizations).

Since each OPO has a monopoly on organ procurement within its designated service area (DSA), CMS must hold OPOs to high standards. Collection of this information is necessary for CMS to assess the effectiveness of each OPO and determine whether it should continue to be certified as an OPO and designated for a particular donation service area by the Secretary or replaced by an OPO that can more effectively procure organs within that DSA. *Form Number:* CMS–R–13 (OCN: 0938–0688); *Frequency:* Occasionally; *Affected Public:* Not-for-profit institutions; *Number of Respondents:* 58; *Total Annual Responses:* 58; *Total Annual Hours:* 14,453. (For policy questions regarding this collection contact Diane Corning at 410–786–8486. For all other issues call 410–786–1326.)

To obtain copies of the supporting statement and any related forms for the proposed paperwork collections referenced above, access CMS' Web site address at *http://www.cms.hhs.gov/PaperworkReductionActof1995*, or Email your request, including your address, phone number, OMB number, and CMS document identifier, to *Paperwork@cms.hhs.gov*, or call the Reports Clearance Office on (410) 786–1326.

In commenting on the proposed information collections please reference the document identifier or OMB control number. To be assured consideration, comments and recommendations must be submitted in one of the following ways by July 16, 2013:

1. *Electronically.* You may submit your comments electronically to *http://www.regulations.gov.* Follow the instructions for ''Comment or Submission'' or ''More Search Options'' to find the information collection document(s) accepting comments.

2. *By regular mail.* You may mail written comments to the following address: CMS, Office of Strategic Operations and Regulatory Affairs, Division of Regulations Development, Attention: Document Identifier/OMB Control Number ____, Room C4–26–05, 7500 Security Boulevard, Baltimore, Maryland 21244–1850.

Dated: May 14, 2013.

Martique Jones,

Deputy Director, Regulations Development Group, Office of Strategic Operations and Regulatory Affairs.

[FR Doc. 2013–11812 Filed 5–16–13; 8:45 am]

BILLING CODE 4120–01–P

DEPARTMENT OF HEALTH AND HUMAN SERVICES

Centers for Medicare & Medicaid Services

[CMS–5504–N3]

Medicare Program; Bundled Payments for Care Improvement Model 1 Open Period

AGENCY: Centers for Medicare & Medicaid Services (CMS), HHS.

ACTION: Notice.

SUMMARY: This notice announces an open period for additional organizations to be considered for participation in Model 1 of the Bundled Payments for Care Improvement initiative.

DATES: *Model 1 of the Bundled Payments for Care Improvement Deadline:* Interested organizations must submit a Model 1 Open Period Information Intake form by July 31, 2013.

FOR FURTHER INFORMATION CONTACT: *BPModel1@cms.hhs.gov* for questions regarding Model 1 of the Bundled Payments for Care Improvement initiative. For additional information on this initiative go to the CMS Center for Medicare and Medicaid Innovation Web site at *http://innovation.cms.gov/initiatives/BPCI-Model-1/index.html.*

SUPPLEMENTARY INFORMATION:

I. Background

We are committed to achieving better health, better care, and lower costs through continuous improvement for Medicare, Medicaid and Children's Health Insurance Program (CHIP) beneficiaries. Beneficiaries can experience improved health outcomes and encounters in the health care system when providers work in a coordinated and person-centered manner. To this end, we are interested in partnering with providers that are working to redesign care to meet these goals. Payment approaches that reward providers that assume payment accountability at the individual level for a particular ''episode'' of care are potential mechanisms for developing these partnerships.

The CMS Center for Medicare and Medicaid Innovation (Innovation Center) is testing four episode payment models. Testing of the first model, Model 1 of the Bundled Payments for Care Improvement initiative, began in April 2013 following a review of applications submitted in response to a Request for Application released by the Innovation Center in August 2011. For additional information about Model 1 of the Bundled Payments for Care Improvement initiative that began in April 2013, please visit the Innovation Center Web site as specified in the **FOR FURTHER INFORMATION CONTACT** section of this notice.

The Innovation Center is announcing an open period for additional organizations to be considered for participation in Model 1 of the Bundled Payments for Care Improvement initiative. Interested organizations can find information about the intake process, eligible organizations, and model requirements on the Web site as specified in the **FOR FURTHER INFORMATION CONTACT** section of this notice.

II. Provisions of the Notice

We seek to achieve the following goals through implementation, consistent with the authority under section 1115A of the Social Security Act (the Act), as added by section 3021 of the Affordable Care Act, to test innovative payment and service delivery models that reduce spending under Medicare, Medicaid, or CHIP, while preserving or enhancing the quality of care:

- Improve care coordination, beneficiary experience, and accountability in a person-centered manner.
- Support and encourage providers that are interested in continuously reengineering care to deliver better care and better health at lower costs through continuous improvement.
- Create a cycle that leads to continually decreasing the cost of an acute or chronic episode of care while fostering quality improvement.
- Develop and test payment models that create extended accountability for better care, better health at lower costs for the full range of health care services.
- Shorten the cycle time for adoption of evidence-based care.
- Create environments that stimulate rapid development of new evidence-based knowledge.

We are announcing an open period for additional organizations to be considered for participation in Model 1 of the Bundled Payments for Care Improvement initiative. Acute care hospitals paid under the inpatient prospective payment systems (IPPS) and organizations that wish to convene acute care hospitals in a facilitator convener role are eligible to be considered for participation in Model 1. Interested organizations must submit a Model 1 Open Period Information Intake form for a copy of the form go to the CMS Web site as specified in the **FOR FURTHER INFORMATION CONTACT** section of this notice. Once organizations submit the intake form to *BPModel1@cms.hhs.gov*, we will review the information provided and screen organizations for suitability for participation in Model 1. For information on the screening process go to the CMS Center for Medicare and Medicaid Innovation Web site as specified in the **FOR FURTHER INFORMATION CONTACT** section. We expect to offer Model 1 participation agreements to those organizations that demonstrate their fitness for participation in Model 1. More information about the participation process and model requirements can be found on the Web site as specified in the **FOR FURTHER INFORMATION CONTACT** section of this notice.

III. Collection of Information Requirements

Section 1115A(d) of the Act waives the requirements of the Paperwork Reduction Act of 1995 for purposes of testing and evaluation of new models or expansion of such models under section 1115A under this section.

Authority: Section 1115A of the Social Security Act (42 U.S.C. 1315a)
(Catalog of Federal Domestic Assistance No. 93.773 Medicare—Hospital Insurance Program; and No. 93.774, Medicare—Supplementary Medical Insurance Program)

Dated: May 3, 2013.

Marilyn Tavenner,

Acting Administrator, Centers for Medicare & Medicaid Services.

[FR Doc. 2013–11819 Filed 5–16–13; 8:45 am]

BILLING CODE 4120–01–P

DEPARTMENT OF HEALTH AND HUMAN SERVICES

Administration for Children and Families

Proposed Information Collection Activity; Comment Request

Title: Subsidized and Transitional Employment Demonstration (STED) and Enhanced Transitional Jobs Demonstration (ETJD).

OMB No.: 0970–0413.

Description: The Administration for Children and Families (ACF) within the U.S. Department of Health and Human Services (HHS) has launched a national evaluation called the Subsidized and Transitional Employment Demonstration (STED). At the same time, the Employment and Training Administration (ETA) within the Department of labor (DOL) is conducting an evaluation of the Enhanced Transistional Jobs Demonstration (ETJD). These evaluations will inform the Federal government about the effectiveness of subsidized and transitional employment programs in helping vulnerable populations secure unsubsidized jobs in the labor market and achieve self-sufficiency. The projects will evaluate up to twelve subsidized and transitional employment programs nationwide. ACF and ETA are collaborating on the two evaluations. In 2011, ETA awarded grants to seven transitional jobs programs as part of the ETJD, which is testing the effect of combining transitional jobs with enhanced services to assist ex-offenders and noncustodial parents improve labor market outcomes, reduce criminal recidivism and improve family engagement.

The STED and ETJD projects have complementary goals and are focusing on related program models and target populations. Thus, ACF and ETA have agreed to collaborate on the design of data collection instruments to promote consistency across the projects. In addition, two of the seven DOL-funded ETJD programs will be evaluated as part of the STED project. Data for the study will be collected from the following three major sources: Baseline Forms; Follow-Up Surveys (6, 12, and 30 months); and Implementation Research and Site Visits.

The proposed revised information collection includes alternate 6- and 12-month survey instruments which were developed for the STED sites serving young adults. It is being submitted by ACF on behalf of both collaborating agencies.

Respondents: The respondents to the young adult baseline and follow-up surveys include study participants identified as young adults in the treatment and control groups.

Annual Burden Estimates

Note: No additional burden is requested from the already approved information collection.

Instrument	Annual number of respondents	Number of responses per respondent	Average burden hour per response	Total annual burden hours [1]
6-month survey:				
Youth Respondents (amended version)	533	1	.5	267
Adult Respondents (already approved)	1,334	1	.5	667
12-month survey:				
Youth Respondents (amended version)	533	1	.75	400
Adult Respondents (already approved)	2,667	1	.75	2,000
Total Burden for Surveys				3,334

[1] Rounding may cause slight discrepancies between annual and total estimated burden hours.

Additional Information

Copies of the proposed collection may be obtained by writing to the Administration for Children and Families, Office of Planning, Research and Evaluation, 370 L'Enfant Promenade, SW., Washington, DC 20447, Attn: OPRE Reports Clearance Officer. All requests should be identified by the title of the information collection. Email address: *OPREinfocollection@acf.hhs.gov.*

OMB Comment

OMB is required to make a decision concerning the collection of information between 30 and 60 days after publication of this document in the **Federal Register**. Therefore, a comment is best assured of having its full effect if OMB receives it within 30 days of publication. Written comments and recommendations for the proposed information collection should be sent directly to the following: Office of Management and Budget, Paperwork Reduction Project, Email: *OIRA_SUBMISSION@OMB.EOP.GOV, Attn*: Desk Officer for the Administration for Children and Families.

Steven M. Hanmer,

OPRE Reports Clearance Officer.

[FR Doc. 2013–11762 Filed 5–16–13; 8:45 am]

BILLING CODE 4184–09–P

DEPARTMENT OF HEALTH AND HUMAN SERVICES

Food and Drug Administration

[Docket No. FDA–2013–D–0501]

Center for Devices and Radiological Health Appeals Processes: Questions and Answers About 517A; Draft Guidance for Industry and Food and Drug Administration Staff; Availability

AGENCY: Food and Drug Administration, HHS.

ACTION: Notice.

SUMMARY: The Food and Drug Administration (FDA) is announcing the availability of the draft guidance entitled ''Center for Devices and Radiological Health (CDRH) Appeals Processes: Questions and Answers About 517A.'' This draft document provides CDRH's proposed interpretation of key provisions of the Federal Food Drug and Cosmetic Act

(FD&C Act), which were added by the FDA Safety and Innovation Act (FDASIA), as those provisions pertain to requests for documentation of rationales for significant decisions and requests for supervisory review of regulatory decisions and actions taken by CDRH. This draft guidance is not final nor is it in effect at this time.

DATES: Although you can comment on any guidance at any time (see 21 CFR 10.115(g)(5)), to ensure that the Agency considers your comment on this draft guidance before it begins work on the final version of the guidance, submit either electronic or written comments on the draft guidance by August 15, 2013.

ADDRESSES: Submit written requests for single copies of the draft guidance document entitled ''Center for Devices and Radiological Health Appeals Processes: Questions and Answers About 517A'' to the Division of Small Manufacturers, International and Consumer Assistance, Center for Devices and Radiological Health, Food and Drug Administration, 10903 New Hampshire Ave., Bldg. 66, Rm. 4613, Silver Spring, MD 20993–0002. Send one self-addressed adhesive label to assist that office in processing your request, or fax your request to 301–847–8149. See the **SUPPLEMENTARY INFORMATION** section for information on electronic access to the guidance.

Submit electronic comments on the draft guidance to *http://www.regulations.gov*. Submit written comments to the Division of Dockets Management (HFA–305), Food and Drug Administration, 5630 Fishers Lane, Rm. 1061, Rockville, MD 20852. Identify comments with the docket number found in brackets in the heading of this document.

FOR FURTHER INFORMATION CONTACT: David S. Buckles, Center for Devices and Radiological Health, Food and Drug Administration, 10903 New Hampshire Ave., Bldg. 66, Rm. G470, Silver Spring, MD 20993–0002, 301–796–5447.

I. Background

In July of 2012, section 517A of the FD&C Act (21 U.S.C. 360g–1) was added by section 603 of FDASIA (Pub. L. 112–114). CDRH developed this draft guidance as a companion document to the guidance entitled ''Center for Devices and Radiological Health Appeals Processes,'' (Appeals Guidance) which is also announced in this issue of the **Federal Register**, to provide proposed interpretations of the new law. This document provides interpretations of the terms ''significant decisions'' and ''substantive summary.'' It also addresses who may request documentation of significant decisions under section 517A of the FD&C Act, and how this provision relates to requests under the Freedom of Information Act. When this guidance is finalized, CDRH intends to include the questions and answers in this draft guidance as an appendix to the Appeals Guidance.

II. Significance of Guidance

This draft guidance is being issued consistent with FDA's good guidance practices regulation (21 CFR 10.115). The draft guidance, when finalized, will represent the Agency's current thinking on CDRH's appeals processes. It does not create or confer any rights for or on any person and does not operate to bind FDA or the public. An alternative approach may be used if such approach satisfies the requirements of the applicable statute and regulations.

III. Electronic Access

Persons interested in obtaining a copy of the draft guidance may do so by using the Internet. A search capability for all CDRH guidance documents is available at *http://www.fda.gov/MedicalDevices/DeviceRegulationandGuidance/GuidanceDocuments/default.htm*. Guidance documents are also available at *http://www.regulations.gov*. To receive ''Center for Devices and Radiological Health Appeals Processes: Questions and Answers About 517A'' you may either send an email request to *dsmica@fda.hhs.gov* to receive an electronic copy of the document or send a fax request to 301–847–8149 to receive a hard copy. Please use the document number 1821 to identify the guidance you are requesting.

IV. Paperwork Reduction Act of 1995

The draft guidance refers to collections of information that are subject to review by the Office of Management and Budget (OMB) under the Paperwork Reduction Act of 1995 (44 U.S.C. 3501–3520). The collections of information in the guidance document ''Center for Devices and Radiological Health Appeals Processes'' are approved under OMB control number 0910–0738 (expires April 30, 2016). The draft guidance also refers to currently approved information collections found in FDA regulations. The collections of information in 21 CFR part 807 subpart E are approved under OMB control number 0910–0120; the collections of information in 21 CFR part 812 are approved under OMB control number 0910–0078; the collections of information in 21 CFR part 814 are approved under OMB control number 0910–0231; and the collections of information in 21 CFR part 814 subpart H are approved under OMB control number 0910–0332.

V. Comments

Interested persons may submit either electronic comments regarding this document to *http://www.regulations.gov* or written comments to the Division of Dockets Management (see **ADDRESSES**). It is only necessary to send one set of comments. Identify comments with the docket number found in brackets in the heading of this document. Received comments may be seen in the Division of Dockets Management between 9 a.m. and 4 p.m., Monday through Friday, and will be posted to the docket at *http://www.regulations.gov*.

Dated: May 13, 2013.

Leslie Kux,

Assistant Commissioner for Policy.

[FR Doc. 2013–11708 Filed 5–16–13; 8:45 am]

BILLING CODE 4160–01–P

DEPARTMENT OF HEALTH AND HUMAN SERVICES

Food and Drug Administration

[Docket No. FDA–2011–D–0893]

Center for Devices and Radiological Health Appeals Processes; Guidance for Industry and FDA Staff; Availability

AGENCY: Food and Drug Administration, HHS.

ACTION: Notice.

SUMMARY: The Food and Drug Administration (FDA) is announcing the availability of the guidance entitled ''Center for Devices and Radiological Health (CDRH) Appeals Processes.'' This document describes the processes available to outside stakeholders to request additional review of decisions or actions by CDRH employees which include requests for supervisory review of an action, petitions, and hearings. Of these, the most commonly used process is the request for supervisory review (a ''10.75 appeal''). This document provides general information about each process as well as guidance on how to submit related requests to CDRH and FDA.

DATES: Submit either electronic or written comments on this guidance at any time. General comments on Agency guidance documents are welcome at any time.

ADDRESSES: Submit written requests for single copies of the guidance document entitled ''Center for Devices and Radiological Health Appeals Processes''

to the Division of Small Manufacturers, International and Consumer Assistance, Center for Devices and Radiological Health, Food and Drug Administration, 10903 New Hampshire Ave. Bldg. 66, Rm. 4613, Silver Spring, MD 20993–0002. Send one self-addressed adhesive label to assist that office in processing your request or fax your request to 301–847–8149. See the **SUPPLEMENTARY INFORMATION** section for information on electronic access to the guidance.

Submit electronic comments on the guidance to *http://www.regulations.gov*. Submit written comments to the Division of Dockets Management (HFA–305), Food and Drug Administration, 5630 Fishers Lane, Rm. 1061, Rockville, MD 20852. Identify comments with the docket number found in brackets in the heading of this document.

FOR FURTHER INFORMATION CONTACT: David S. Buckles, Center for Devices and Radiological Health, Food and Drug Administration, 10903 New Hampshire Ave., Bldg. 66, Rm. G470, Silver Spring, MD 20993–0002, 301–796–5447.

SUPPLEMENTARY INFORMATION:

I. Background

This guidance supersedes two previous guidance documents: ''Medical Device Appeals and Complaints: Guidance for Dispute Resolution,'' dated February 1998 and ''Resolving Scientific Disputes Concerning the Regulation of Medical Devices, A Guide to Use of the Medical Devices Dispute Resolution Panel; Final Guidance for Industry and FDA,'' dated July 2001.

In the **Federal Register** of December 28, 2011 (76 FR 81511), FDA announced the availability of the draft of this guidance. Interested persons were invited to comment by April 26, 2012. In July 2012, section 517A of the Federal Food, Drug, and Cosmetic Act (FD&C Act) (21 U.S.C. 360g–1) was added by section 603 of the FDA Safety and Innovation Act (FDASIA) (Pub. L. 112–114). FDA considered the public comments received and revised the guidance, as appropriate, and in accordance with the new requirements established by section 603 of FDASIA.

Section 517A includes new requirements pertaining to the process and timelines for appeals, made under 21 CFR 10.75 (10.75 appeal) of ''significant decisions'' regarding 510(k) premarket notifications, applications for premarket approval (PMAs), and applications for investigational device exemptions (IDEs). In this guidance document, the term ''significant decision'' refers to significant decisions pertaining to these submissions.

Elsewhere in this issue of the **Federal Register**, FDA is announcing the Agency's proposed interpretation of this provision (for example, what constitutes a ''significant decision'') in a draft guidance document entitled ''Center for Devices and Radiological Health Appeals Processes: Questions and Answers About 517A.''

II. Significance of Guidance

This guidance is being issued consistent with FDA's good guidance practices regulation (21 CFR 10.115). The guidance represents the Agency's current thinking on CDRH's Appeals Processes. It does not create or confer any rights for or on any person and does not operate to bind FDA or the public. An alternative approach may be used if such approach satisfies the requirements of the applicable statute and regulations.

III. Electronic Access

Persons interested in obtaining a copy of the guidance may do so by using the Internet. A search capability for all CDRH guidance documents is available at *http://www.fda.gov/MedicalDevices/DeviceRegulationandGuidance/GuidanceDocuments/default.htm*. Guidance documents are also available at *http://www.regulations.gov*.

To receive ''Center for Devices and Radiological Health Appeals Processes'' you may either send an email request to *dsmica@fda.hhs.gov* to receive an electronic copy of the document or send a fax request to 301–847–8149 to receive a hard copy. Please use the document number 1742 to identify the guidance you are requesting.

IV. Paperwork Reduction Act of 1995

This guidance contains information collection provisions that are subject to review by the Office of Management and Budget (OMB) under the Paperwork Reduction Act of 1995 (44 U.S.C. 3501–3520). The collections of information in the guidance document ''Center for Devices and Radiological Health Appeals Processes'' are approved under OMB control number 0910–0738. The guidance also refers to currently approved information collections found in FDA regulations. The collections of information in 21 CFR 10.30, 21 CFR 10.33, and 21 CFR 10.35 are approved under OMB control number 0910–0183; the collections of information in 21 CFR part 12 are approved under OMB control number 0910–0184; and the collections of information under 21 CFR part 900 are approved under OMB control number 0910–0309.

V. Comments

Interested persons may submit either written comments regarding this document to the Division of Dockets Management (see **ADDRESSES**) or electronic comments to *http://www.regulations.gov*. It is only necessary to send one set of comments. Identify comments with the docket number found in brackets in the heading of this document. Received comments may be seen in the Division of Dockets Management between 9 a.m. and 4 p.m., Monday through Friday, and will be posted to the docket at *http://www.regulations.gov*.

Dated: May 13, 2013.

Leslie Kux,

Assistant Commissioner for Policy.

[FR Doc. 2013–11706 Filed 5–16–13; 8:45 am]

BILLING CODE 4160–01–P

DEPARTMENT OF HEALTH AND HUMAN SERVICES

Food and Drug Administration

[Docket No. FDA–2013–N–0001]

Anesthetic and Analgesic Drug Products Advisory Committee; Notice of Meeting

AGENCY: Food and Drug Administration, HHS.

ACTION: Notice.

This notice announces a forthcoming meeting of a public advisory committee of the Food and Drug Administration (FDA). The meeting will be open to the public.

Name of Committee: Anesthetic and Analgesic Drug Products Advisory Committee.

General Function of the Committee: To provide advice and recommendations to the Agency on FDA's regulatory issues.

Date and Time: The meeting will be held on July 17, 2013, from 8 a.m. to 5 p.m.

Location: FDA White Oak Campus, 10903 New Hampshire Ave., Building 31 Conference Center, the Great Room (Rm. 1503), Silver Spring, MD 20993–0002. Information regarding special accommodations due to a disability, visitor parking, and transportation may be accessed at: *http://www.fda.gov/AdvisoryCommittees/default.htm*; under the heading ''Resources for You,'' click on ''Public Meetings at the FDA White Oak Campus.'' Please note that visitors to the White Oak Campus must enter through Building 1.

Contact Person: Yvette Waples, Center for Drug Evaluation and Research, Food and Drug Administration, 10903 New Hampshire Ave., Bldg. 31, Rm. 2417, Silver Spring, MD 20993–0002, 301–

796–9001, FAX: 301–847–8533, email: *AADPAC@fda.hhs.gov*, or FDA Advisory Committee Information Line, 1–800–741–8138 (301–443–0572 in the Washington, DC area). A notice in the **Federal Register** about last minute modifications that impact a previously announced advisory committee meeting cannot always be published quickly enough to provide timely notice. Therefore, you should always check the Agency's Web site at *http://www.fda.gov/AdvisoryCommittees/default.htm* and scroll down to the appropriate advisory committee meeting link, or call the advisory committee information line to learn about possible modifications before coming to the meeting.

Agenda: On July 17, 2013, the committee will discuss the safety and efficacy for the new drug application (NDA) 203077, proposed trade name MOXDUO (morphine sulfate and oxycodone hydrochloride) capsules, submitted by QRxPharma Inc., for the proposed indication of management of moderate to severe acute pain where the use of an opioid analgesic is appropriate. This product represents the first drug combination consisting of two immediate-release opioids.

FDA intends to make background material available to the public no later than 2 business days before the meeting. If FDA is unable to post the background material on its Web site prior to the meeting, the background material will be made publicly available at the location of the advisory committee meeting, and the background material will be posted on FDA's Web site after the meeting. Background material is available at *http://www.fda.gov/AdvisoryCommittees/Calendar/default.htm*. Scroll down to the appropriate advisory committee meeting link.

Procedure: Interested persons may present data, information, or views, orally or in writing, on issues pending before the committee. Written submissions may be made to the contact person on or before July 2, 2013. Oral presentations from the public will be scheduled between approximately 1 p.m. and 2 p.m. Those individuals interested in making formal oral presentations should notify the contact person and submit a brief statement of the general nature of the evidence or arguments they wish to present, the names and addresses of proposed participants, and an indication of the approximate time requested to make their presentation on or before June 24, 2013. Time allotted for each presentation may be limited. If the number of registrants requesting to speak is greater than can be reasonably accommodated during the scheduled open public hearing session, FDA may conduct a lottery to determine the speakers for the scheduled open public hearing session. The contact person will notify interested persons regarding their request to speak by June 25, 2013.

Persons attending FDA's advisory committee meetings are advised that the Agency is not responsible for providing access to electrical outlets.

FDA welcomes the attendance of the public at its advisory committee meetings and will make every effort to accommodate persons with physical disabilities or special needs. If you require special accommodations due to a disability, please contact Yvette Waples at least 7 days in advance of the meeting.

FDA is committed to the orderly conduct of its advisory committee meetings. Please visit our Web site at *http://www.fda.gov/AdvisoryCommittees/AboutAdvisoryCommittees/ucm111462.htm* for procedures on public conduct during advisory committee meetings.

Notice of this meeting is given under the Federal Advisory Committee Act (5 U.S.C. app. 2).

Dated: May 13, 2013.

Jill Hartzler Warner,

Acting Associate Commissioner for Special Medical Programs.

[FR Doc. 2013–11765 Filed 5–16–13; 8:45 am]

BILLING CODE 4160–01–P

DEPARTMENT OF HEALTH AND HUMAN SERVICES

Health Resources and Services Administration

Advisory Commission on Childhood Vaccines; Notice of Meeting

In accordance with section 10(a)(2) of the Federal Advisory Committee Act (Pub. L. 92–463), notice is hereby given of the following meeting:

Name: Advisory Commission on Childhood Vaccines (ACCV).

Date and Time: June 07, 2013, 10:00 a.m. to 4:00 p.m. EDT.

Place: Audio Conference Call and Adobe Connect Pro.

The ACCV will meet on Friday, June 07 from 10:00 a.m. to 4:00 p.m. (EDT). The public can join the meeting by:

1. (Audio Portion) Calling the conference phone number 800–369–3104 and providing the following information:

Leaders Name: Dr. Vito Caserta

Password: ACCV

2. (Visual Portion) Connecting to the ACCV Adobe Connect Pro Meeting using the following URL: *https://hrsa.connectsolutions.com/accv/* (copy and paste the link into your browser if it does not work directly, and enter as a guest). Participants should call and connect 15 minutes prior to the meeting in order for logistics to be set up. If you have never attended an Adobe Connect meeting, please test your connection using the following URL: *https://hrsa.connectsolutions.com/common/help/en/support/meeting_test.htm* and get a quick overview by following URL: *http://www.adobe.com/go/connectpro_overview*.

Call (301) 443–6634 or send an email to *aherzog@hrsa.gov* if you are having trouble connecting to the meeting site.

Agenda: The agenda items for the June meeting will include, but are not limited to: updates from the Division of Vaccine Injury Compensation (DVIC), Department of Justice (DOJ), National Vaccine Program Office (NVPO), Immunization Safety Office (Centers for Disease Control and Prevention), National Institute of Allergy and Infectious Diseases (National Institutes of Health), and Center for Biologics, Evaluation and Research (Food and Drug Administration). A draft agenda and additional meeting materials will be posted on the ACCV Web site (*http://www.hrsa.gov/vaccinecompensation/accv.htm*) prior to the meeting. Agenda items are subject to change as priorities dictate.

Public Comment: Persons interested in providing an oral presentation should submit a written request, along with a copy of their presentation to: Annie Herzog, DVIC, Healthcare Systems Bureau (HSB), Health Resources and Services Administration (HRSA), Room 11C–26, 5600 Fishers Lane, Rockville, MD 20857 or email: *aherzog@hrsa.gov*. Requests should contain the name, address, telephone number, email address, and any business or professional affiliation of the person desiring to make an oral presentation. Groups having similar interests are requested to combine their comments and present them through a single representative. The allocation of time may be adjusted to accommodate the level of expressed interest. DVIC will notify each presenter by email, mail, or telephone of their assigned presentation time. Persons who do not file an advance request for a presentation, but desire to make an oral statement, may announce it at the time of the public comment period. Public participation and ability to comment will be limited to space and time as it permits.

For Further Information Contact: Anyone requiring information regarding the ACCV should contact Annie Herzog, DVIC, HSB, HRSA, Room 11C–26, 5600 Fishers Lane, Rockville, MD 20857; Telephone (301) 443–6593 or email: *aherzog@hrsa.gov*.

Dated: May 13, 2013.

Bahar Niakan,

Director, Division of Policy and Information Coordination.

[FR Doc. 2013–11777 Filed 5–16–13; 8:45 am]

BILLING CODE 4165–15–P

DEPARTMENT OF HEALTH AND HUMAN SERVICES

National Institutes of Health

National Institute of Neurological Disorders and Stroke; Notice of Closed Meetings

Pursuant to section 10(d) of the Federal Advisory Committee Act, as amended (5 U.S.C. App.), notice is hereby given of the following meetings.

The meetings will be closed to the public in accordance with the provisions set forth in sections 552b(c)(4) and 552b(c)(6), Title 5 U.S.C., as amended. The grant applications and the discussions could disclose confidential trade secrets or commercial property such as patentable materials, and personal information concerning individuals associated with the grant applications, the disclosure of which would constitute a clearly unwarranted invasion of personal privacy.

Name of Committee: Neurological Sciences Training Initial Review Group Neurological Sciences and Disorders B.

Date: June 20–21, 2013.

Time: 8:00 a.m. to 6:00 p.m.

Agenda: To review and evaluate grant applications.

Place: Avenue Crowne Plaza Chicago, 160 E. Huron Street, Chicago, IL 60611.

Contact Person: Birgit Neuhuber, Ph.D., Scientific Review Officer, Scientific Review Branch, Division of Extramural Research, NINDS, NIH, NSC, 6001 Executive Blvd., Suite 3208, MSC 9529, Bethesda, MD 20892–9529, *neuhuber@ninds.nih.gov.*

Name of Committee: National Institute of Neurological Disorders and Stroke Initial Review Group; Neurological Sciences and Disorders A.

Date: June 26–27, 2013.

Time: 8:00 a.m. to 6:00 p.m.

Agenda: To review and evaluate grant applications.

Place: Hyatt Regency Bethesda, One Bethesda Metro Center, 7400 Wisconsin Avenue, Bethesda, MD 20814.

Contact Person: Natalia Strunnikova, Ph.D., Scientific Review Officer, Scientific Review Branch, Division of Extramural Research, NINDS, NIH, NSC, 6001 Executive Blvd., Suite 3208, MSC 9529, Bethesda, MD 20892–9529, 301–402–0288, *Natalia.Strunnikova@nih.gov.*

(Catalogue of Federal Domestic Assistance Program Nos. 93.853, Clinical Research Related to Neurological Disorders; 93.854, Biological Basis Research in the Neurosciences, National Institutes of Health, HHS)

Dated: May 13, 2013.

Carolyn Baum,

Program Analyst, Office of Federal Advisory Committee Policy.

[FR Doc. 2013–11738 Filed 5–16–13; 8:45 am]

BILLING CODE 4140–01–P

DEPARTMENT OF HEALTH AND HUMAN SERVICES

National Institutes of Health

National Institute of Arthritis and Musculoskeletal and Skin Diseases; Notice of Closed Meeting

Pursuant to section 10(d) of the Federal Advisory Committee Act, as amended (5 U.S.C. App.), notice is hereby given of the following meeting.

The meeting will be closed to the public in accordance with the provisions set forth in sections 552b(c)(4) and 552b(c)(6), Title 5 U.S.C., as amended. The grant applications and the discussions could disclose confidential trade secrets or commercial property such as patentable material, and personal information concerning individuals associated with the grant applications, the disclosure of which would constitute a clearly unwarranted invasion of personal privacy.

Name of Committee: National Institute of Arthritis and Musculoskeletal and Skin Diseases Special Emphasis Panel; Ancillary Studies to Large Clinical Projects Grant Review.

Date: June 7, 2013.

Time: 10:00 a.m. to 12:00 p.m.

Agenda: To review and evaluate grant applications.

Place: National Institutes of Health, 6701 Democracy Boulevard, Suite 800, Bethesda, MD 20892.

Contact Person: Xincheng Zheng, MD, Ph.D., Scientific Review Officer, Scientific Review Branch, National Institute of Arthritis, Musculoskeletal and Skin Diseases, NIH, 6701 Democracy Boulevard, Suite 800, Bethesda, MD 20892, 301–594–4953, *xincheng.zheng@nih.gov.*

(Catalogue of Federal Domestic Assistance Program Nos. 93.846, Arthritis, Musculoskeletal and Skin Diseases Research, National Institutes of Health, HHS)

Dated: May 13, 2013.

Carolyn Baum,

Program Analyst, Office of Federal Advisory Committee Policy.

[FR Doc. 2013–11741 Filed 5–16–13; 8:45 am]

BILLING CODE 4140–01–P

DEPARTMENT OF HEALTH AND HUMAN SERVICES

National Institutes of Health

Center for Scientific Review; Notice of Closed Meetings

Pursuant to section 10(d) of the Federal Advisory Committee Act, as amended (5 U.S.C. App.), notice is hereby given of the following meetings.

The meetings will be closed to the public in accordance with the provisions set forth in sections 552b(c)(4) and 552b(c)(6), Title 5 U.S.C., as amended. The grant applications and the discussions could disclose confidential trade secrets or commercial property such as patentable material, and personal information concerning individuals associated with the grant applications, the disclosure of which would constitute a clearly unwarranted invasion of personal privacy.

Name of Committee: Vascular and Hematology Integrated Review Group Atherosclerosis and Inflammation of the Cardiovascular System Study Section.

Date: June 10–11, 2013.

Time: 8:00 a.m. to 5:00 p.m.

Agenda: To review and evaluate grant applications.

Place: Embassy Suites at the Chevy Chase Pavilion, 4300 Military Road NW., Washington, DC 20015.

Contact Person: Katherine M Malinda, Ph.D., Scientific Review Officer, Center for Scientific Review, National Institutes of Health, 6701 Rockledge Drive, Room 4140, MSC 7814, Bethesda, MD 20892, 301–435–0912, *Katherine_Malinda@csr.nih.gov*.

Name of Committee: Healthcare Delivery and Methodologies Integrated Review Group Biomedical Computing and Health Informatics Study Section.

Date: June 12, 2013.

Time: 8:00 a.m. to 6:00 p.m.

Agenda: To review and evaluate grant applications.

Place: National Institutes of Health, 6701 Rockledge Drive, Bethesda, MD 20892.

Contact Person: Melinda Jenkins, Ph.D., Scientific Review Officer, Center for Scientific Review, National Institutes of Health, 6701 Rockledge Drive, Room 3156, MSC 7770, Bethesda, MD 20892, 301–437–7872, *jenkinsml2@mail.nih.gov*.

Name of Committee: Healthcare Delivery and Methodologies Integrated Review Group Nursing and Related Clinical Sciences Study Section.

Date: June 12, 2013.

Time: 8:00 a.m. to 6:00 p.m.

Agenda: To review and evaluate grant applications.

Place: Sheraton Delfina Santa Monica Hotel, 530 West Pico Boulevard, Santa Monica, CA 90405.

Contact Person: Priscah Mujuru, RN, DRPH, COHNS, Scientific Review Officer, Center for Scientific Review, National Institutes of Health, 6701 Rockledge Drive, Room 3139, MSC 7770, Bethesda, MD 20892, 301–594–6594, *mujurup@mail.nih.gov*.

Name of Committee: Center for Scientific Review Special Emphasis Panel Nursing and Related Clinical Sciences Overflow.

Date: June 12, 2013.

Time: 8:00 a.m. to 5:00 p.m.

Agenda: To review and evaluate grant applications.

Place: Hyatt Regency Bethesda, One Bethesda Metro Center, 7400 Wisconsin Avenue, Bethesda, MD 20814.

Contact Person: Martha L Hare, Ph.D., RN, Scientific Review Officer, Center for Scientific Review, National Institutes of Health, 6701 Rockledge Drive, Room 3154, Bethesda, MD 20892, (301) 451–8504, *harem@mail.nih.gov*.

Name of Committee: Healthcare Delivery and Methodologies Integrated Review Group Biostatistical Methods and Research Design Study Section.

Date: June 14, 2013.

Time: 8:00 a.m. to 6:00 p.m.

Agenda: To review and evaluate grant applications.

Place: Holiday Inn Inner Harbor, 301 W. Lombard Street, Baltimore, MD 21201.

Contact Person: Tomas Drgon, Ph.D., Scientific Review Officer, Center for Scientific Review, National Institutes of Health, 6701 Rockledge Drive, Room 3152, MSC 7770, Bethesda, MD 20892, 301–435–1017, *tdrgon@csr.nih.gov*.

(Catalogue of Federal Domestic Assistance Program Nos. 93.306, Comparative Medicine; 93.333, Clinical Research, 93.306, 93.333, 93.337, 93.393–93.396, 93.837–93.844, 93.846–93.878, 93.892, 93.893, National Institutes of Health, HHS)

Dated: May 13, 2013.

Melanie J. Gray,

Program Analyst, Office of Federal Advisory Committee Policy.

[FR Doc. 2013–11737 Filed 5–16–13; 8:45 am]

BILLING CODE 4140–01–P

DEPARTMENT OF HOMELAND SECURITY

[Docket No. DHS–2013–0022]

President's National Security Telecommunications Advisory Committee

AGENCY: National Protection and Programs Directorate, DHS.

ACTION: Committee Management; Notice of Partially Closed Federal Advisory Committee Meeting; Correction.

SUMMARY: The Department of Homeland Security published a document in the **Federal Register** of May 14, 2013, providing notice of a May 22, 2013, meeting of the President's National Security Telecommunications Advisory Committee (NSTAC). The document contained an incorrect date for the close of the comment period.

FOR FURTHER INFORMATION CONTACT: Michael Echols, NSTAC Alternate Designated Federal Officer, Department of Homeland Security, telephone (703) 235–5469.

Correction

In the **Federal Register** of May 14, 2013, in FR Doc. 2013–11324, on page 28238, in the first column, in the first paragraph of the **ADDRESSES** caption, correct the sixth sentence to read:

Comments must be submitted in writing no later than May 21, 2013 and must be identified by DHS–2013–0222 and may be submitted by *one* of the following methods:

Dated: May 15, 2013.

Christina E. McDonald,

Associate General Counsel for Regulatory Affairs.

[FR Doc. 2013–11948 Filed 5–16–13; 8:45 am]

BILLING CODE 9110–9P–P

DEPARTMENT OF HOMELAND SECURITY

Coast Guard

[Docket No. USCG–2013–0339]

Request for Public Comment on New Proposed Categorical Exclusion for Real Property Disposal Under the National Environmental Policy Act

AGENCY: Coast Guard, DHS.

ACTION: Notice of availability and request for comments.

SUMMARY: This is a notice and request for comments on a Proposed New Categorical Exclusion for Real Property Disposal. This proposal would amend the Coast Guard Commandant Instruction and Department of Homeland Security Directive used to comply with the National Environmental Policy Act by establishing a new categorical exclusion (CATEX) for real property disposal undertaken by the United States Coast Guard. The Coast Guard seeks comments on this proposed CATEX.

DATES: Comments and related material must either be submitted to our online docket via *http://www.regulations.gov* on or before June 17, 2013 or reach the Docket Management Facility by that date.

ADDRESSES: You may submit comments identified by docket number USCG–2013–0339 using any one of the following methods:

(1) *Federal eRulemaking Portal: http://www.regulations.gov*.

(2) *Fax:* 202–493–2251.

(3) *Mail:* Docket Management Facility (M–30), U.S. Department of Transportation, West Building Ground Floor, Room W12–140, 1200 New Jersey Avenue SE., Washington, DC 20590–0001.

(4) *Hand delivery:* Same as mail address above, between 9 a.m. and 5 p.m., Monday through Friday, except Federal holidays. The telephone number is 202–366–9329.

To avoid duplication, please use only one of these four methods. See the ''Public Participation and Request for Comments'' portion of the **SUPPLEMENTARY INFORMATION** section below for instructions on submitting comments.

FOR FURTHER INFORMATION CONTACT: If you have questions on this notice, call or email Ms. Kebby Kelly, United States Coast Guard Office of Environmental Management; telephone 202–475–5690, email *Kebby.Kelley@uscg.mil*. If you have questions on viewing or submitting material to the docket, call Barbara Hairston, Program Manager, Docket Operations, telephone 202–366–9826.

SUPPLEMENTARY INFORMATION:

Public Participation and Request for Comments

We encourage you to submit comments and related material on the proposed new Coast Guard Categorical Exclusion (CATEX) for real property disposal. All comments received will be posted without change to *http://www.regulations.gov* and will include any personal information you have provided.

Submitting comments: If you submit a comment, please include the docket number for this notice (USCG–2013–0339) and provide a reason for each suggestion or recommendation. You may submit your comments and material online, or by fax, mail or hand delivery, but please use only one of these means. We recommend that you include your name and a mailing address, an email address, or a telephone number in the body of your document so that we can contact you if we have questions regarding your submission.

To submit your comment online, go to *http://www.regulations.gov*, insert (USCG–2013–0339) in the Search box, look for this notice in the docket and click the comment button next to it. If

you submit your comments by mail or hand delivery, submit them in an unbound format, no larger than 8½ by 11 inches, suitable for copying and electronic filing. If you submit them by mail and would like to know that they reached the Facility, please enclose a stamped, self-addressed postcard or envelope. We will consider all comments and material received during the comment period.

Viewing comments and supporting material: To view comments, go to *http://www.regulations.gov*, insert (USCG–2013–0339) in the Search box, then click on the ''Open Docket Folder'' option. If you do not have access to the internet, you may view the docket by visiting the Docket Management Facility in Room W12–140 on the ground floor of the Department of Transportation West Building, 1200 New Jersey Avenue SE., Washington, DC 20590, between 9 a.m. and 5 p.m., Monday through Friday, except Federal holidays. We have an agreement with the Department of Transportation to use the Docket Management Facility.

Privacy Act

Anyone can search the electronic form of comments received into any of our dockets by the name of the individual submitting the comment (or signing the comment, if submitted on behalf of an association, business, labor union, etc.). You may review a Privacy Act notice regarding our public dockets in the January 17, 2008, issue of the **Federal Register** (73 FR 3316).

Background

The Coast Guard has determined that a new CATEX is needed to cover two new real property disposal authorities specific to the Coast Guard. In the past, the Coast Guard exclusively used the process established by the General Services Administration (GSA) to dispose of excess real property, unless specifically directed otherwise by Congress. Because the Coast Guard previously worked through the GSA for property disposal, the GSA was able to use its CATEX to fulfill obligations under the National Environmental Policy Act (NEPA). Recently, Congress passed two pieces of legislation that directly authorize DHS and the Coast Guard to dispose of real property through sale and keep the proceeds for use in specific Coast Guard programs.

Specifically, the Coast Guard has been granted authority to dispose of property previously used for Long Range Navigation (Loran-C) equipment. The Coast Guard has also been granted the authority to dispose of real property in order to pay for military family and military unaccompanied housing projects. The Coast Guard seeks to add a CATEX that contains the same language as the GSA's CATEX that will allow the Coast Guard to satisfy its NEPA obligations when disposing of excess real property.

The Department of Homeland Security Appropriations Act, 2010 (Pub. L. 111–83), authorizes the Coast Guard to sell any real and personal property under the administrative control of the Coast Guard and used for the Loran-C system, by directing the Administrator of GSA to sell such real and personal property. This is allowed, provided that the proceeds, less the costs of sale incurred by the GSA, shall be deposited as offsetting collections into the ''Coast Guard Environmental Compliance and Restoration'' account and, subject to appropriation, shall be available until expended for environmental compliance and restoration purposes associated with the Loran-C system.

Additionally, Congress passed 14 U.S.C. 685, Conveyance of Real Property (January 7, 2011), which states that notwithstanding any other provision of law, the Secretary of the respective department in which the Coast Guard is operating (Secretary) may convey, at fair market value, real property, owned or under the administrative control of the Coast Guard, for the purpose of expending the proceeds from such conveyance to acquire and construct military family housing and military unaccompanied housing. The conveyance of real property under this section shall be by sale, for cash. The Secretary shall deposit the proceeds from the sale in the Coast Guard Housing Fund.

This proposal is to add the following Coast Guard-specific CATEX to the existing list of CATEXs published in Coast Guard Commandant Instruction 16475.1D, National Environmental Policy Act Implementing Procedures and Policy for Considering Environmental Impacts, and to the DHS Environmental Planning Program Directive 023–01 (71 FR 16790):

*[L64] Disposal of real property (including facilities) by the Coast Guard where the reasonably foreseeable use will not change significantly or where the reasonably foreseeable use is similar to existing surrounding properties (e.g. commercial store in a commercial strip, warehouse in an urban complex, office building in downtown area, row house or vacant lot in an urban area).

The asterisk (*) indicates application of this CATEX requires the completion of an environmental review of the proposed disposal action documented in a Record of Environmental Consideration to ensure extraordinary circumstances have been appropriately considered. The availability of this CATEX does not exempt the applicability of other environmental requirements such as, but not limited to, section 7 of the Endangered Species Act, section 106 of the National Historic Preservation Act, and the Migratory Bird Treaty Act. These requirements must be met regardless of the applicability of this CATEX under NEPA.

The Council on Environmental Quality (CEQ) guidance entitled, ''Establishing, Applying, and Revising Categorical Exclusions under the National Environmental Policy Act'' (February 18, 2010) encourages agencies to establish new CATEXs and revise existing CATEXs to eliminate unnecessary paperwork and effort reviewing the environmental effects of categories of actions that, absent extraordinary circumstances, do not have significant environmental effects. Without a CATEX for real property disposal, DHS and the Coast Guard would have to prepare an Environmental Assessment for every action of this type, including those that experience has shown do not typically have the potential for significant environmental impacts. Therefore, DHS and the Coast Guard need a CATEX for these types of actions that experience has shown do not have significant environmental impacts in order to carry out its new legislative authorities in a timely and efficient manner.

The CEQ guidance also states that when substantiating a new or revised CATEX, agencies can draw on several sources of supporting information. These sources include professional staff and expert opinion and benchmarking other agencies' experiences. Through a review of other agencies' NEPA procedures, the Coast Guard and DHS found that numerous other Federal agencies have CATEXs for real property disposal activities that are sufficiently descriptive of the activity as to establish that those activities were similar in nature, scope, and impact on the human environment as those real property disposals that would be performed by the Coast Guard. In addition, all Federal agencies, with very few exceptions, must meet the same requirements to protect the environment.

Particular agency CATEXs examined by the Coast Guard include those used by the GSA and the Department of the Army. DHS also received expert opinions from NEPA practitioners at GSA and the Department of the Army that supports this proposed new CATEX for the disposal of real property (including facilities) by the Coast Guard. Descriptions of the other agency

CATEXs (with hyperlinks) and expert opinions obtained are provided in the administrative record available at *http://www.regulations.gov* by searching docket number USCG–2013–0339.

This notice is issued under authority of: 5 U.S.C. 552(a); 42 U.S.C. 4321 et seq.; 40 CFR parts 1500–1508; Department of Homeland Security Management Directive 023–01 Environmental Planning Program; and United States Coast Guard Commandant Instruction M16475.1D, National Environmental Policy Act Implementing Procedures and Policy for Considering Environmental Impacts.

Dated: May 13, 2013.

J. Smith,

Chief, Office of Environmental Management, U.S. Coast Guard.

[FR Doc. 2013–11867 Filed 5–16–13; 8:45 am]

BILLING CODE 9110–04–P

DEPARTMENT OF HOMELAND SECURITY

United States Secret Service

30-Day Notice and Request for Comments

SUMMARY: The Department of Homeland Security (DHS) has submitted the following information collection requests (ICR) to the Office of Management and Budget (OMB) for review and clearance in accordance with the Paperwork Reduction Act of 1995: 1620–0002. This information collection was previously published in the **Federal Register** on March 7, 2013 at 78 FR 14807, allowing for OMB review and a 60-day public comment period. No comments were received. This notice allows for an additional 30 days for public comment.

DATES: Comments are encouraged and will be accepted until June 17, 2013. This process is conduced in accordance with 5 CFR 1320.10.

Written comments and/or suggestions regarding the items contained in this notice should be directed to the Office of Information and Regulatory Affairs, Office of Management and Budget, Attn: Desk Officer for United States Secret Service, Department of Homeland Security, and sent via electronic mail to *oira_submission@omb.eop.gov;* or faxed to 202–395–5806.

The Office of Management and Budget is particularly interested in comments which:

(1) Evaluate whether the proposed collection of information is necessary for the proper performance of the functions of the agency, including whether the information will have practical utility;

(2) Evaluate the accuracy of the agency's estimate of the burden of the proposed collection of information, including the validity of the methodology and assumptions used;

(3) Enhance the quality, utility, and clarity of the information to be collected; and

(4) Minimize the burden of the collection of information on those who are to respond, including through the use of appropriate automated, electronic, mechanical, or other technological collection techniques or other forms of information technology, e.g., permitting electronic submissions of responses.

FOR FURTHER INFORMATION CONTACT: Requests for additional information or copies of the form(s) and instructions should be directed to: United States Secret Service, Security Clearance Division, Attn: ASAIC Michael Smith, Communications Center (SCD), 345 Murray Lane SW., Building T5, Washington, DC 20223. Telephone number: 202–406–6658.

SUPPLEMENTARY INFORMATION: Section 3506 of the Paperwork Reduction Act of 1995 (44 U.S.C. Chapter 35) requires each Federal agency to provide interested Federal agencies and the public an early opportunity to comment on information collection requests. The notice for this proposed information collection contains the following: (1) The name of the component of the U.S. Department of Homeland Security; (2) Type of review requested, e.g., new, revision, extension, existing or reinstatement; (3) OMB Control Number, if applicable; (4) Title; (5) Summary of the collection; (6) Description of the need for, and proposed use of, the information; (7) Respondents and frequency of collection; and (8) Reporting and/or recordkeeping burden.

The Department of Homeland Security invites public comment.

The Department of Homeland Security is especially interested in public comment addressing the following issues: (1) Is this collection necessary to the proper functions of the Department, including whether the information will have practical utility; (2) Is the estimate of burden for this information collection accurate; (3) How might the Department enhance the quality, utility, and clarity of the information to be collected; and (4) How might the Department minimize the burden of this collection on the respondents, including through the use of information technology. All comments will become a matter of public record. In this document the U. S. Secret Service is soliciting comments concerning the following information collection:

Title: U.S. Secret Service Facility Access Request.

OMB Number: 1620–0002.

Form Number: SSF 3237.

Abstract: Respondents are primarily Secret Service contractor personnel or non-Secret Service Government employees on official business that require access to Secret Service controlled facilities in performance of official duties. These individuals, if approved for access, will require escorted, unescorted, and staff-like access to Secret Service-controlled facilities. Responses to questions on the SSF 3237 yield information necessary for the adjudication of eligibility for facility access.

Agency: Department of Homeland Security, United States Secret Service.

Frequency: Occasionally.

Type of Review: Revision of a currently approved collection.

Affected Public: Individuals or Households/Business.

Estimated Number of Respondents: 5000.

Estimated Time per Respondent: 15 minutes.

Estimated Total Annual Burden Hours: 1250 hours.

Estimated Total Burden Cost (capital/startup): None.

Total Burden Cost (operating/maintaining): None.

Dated: May 8, 2013.

Sharon Johnson,

Chief—Policy Analysis and Organizational Development Branch, U.S. Secret Service, U.S. Department of Homeland Security.

[FR Doc. 2013–11780 Filed 5–16–13; 8:45 am]

BILLING CODE 4810–42–P

DEPARTMENT OF HOUSING AND URBAN DEVELOPMENT

[Docket No. FR–5681–N–20]

Federal Property Suitable as Facilities To Assist the Homeless

AGENCY: Office of the Assistant Secretary for Community Planning and Development, HUD.

ACTION: Notice.

SUMMARY: This Notice identifies unutilized, underutilized, excess, and surplus Federal property reviewed by HUD for suitability for use to assist the homeless.

FOR FURTHER INFORMATION CONTACT: Juanita Perry, Department of Housing

and Urban Development, 451 Seventh Street SW., Room 7266, Washington, DC 20410; telephone (202) 402–3970; TTY number for the hearing- and speech-impaired (202) 708–2565 (these telephone numbers are not toll-free), or call the toll-free Title V information line at 800–927–7588.

SUPPLEMENTARY INFORMATION: In accordance with 24 CFR part 581 and section 501 of the Stewart B. McKinney Homeless Assistance Act (42 U.S.C. 11411), as amended, HUD is publishing this Notice to identify Federal buildings and other real property that HUD has reviewed for suitability for use to assist the homeless. The properties were reviewed using information provided to HUD by Federal landholding agencies regarding unutilized and underutilized buildings and real property controlled by such agencies or by GSA regarding its inventory of excess or surplus Federal property. This Notice is also published in order to comply with the December 12, 1988 Court Order in *National Coalition for the Homeless* v. *Veterans Administration,* No. 88–2503–OG (D.D.C.).

Properties reviewed are listed in this Notice according to the following categories: Suitable/available, suitable/unavailable, and suitable/to be excess, and unsuitable. The properties listed in the three suitable categories have been reviewed by the landholding agencies, and each agency has transmitted to HUD: (1) Its intention to make the property available for use to assist the homeless, (2) its intention to declare the property excess to the agency's needs, or (3) a statement of the reasons that the property cannot be declared excess or made available for use as facilities to assist the homeless.

Properties listed as suitable/available will be available exclusively for homeless use for a period of 60 days from the date of this Notice. Where property is described as for ''off-site use only'' recipients of the property will be required to relocate the building to their own site at their own expense. Homeless assistance providers interested in any such property should send a written expression of interest to HHS, addressed to Theresa Ritta, Office of Enterprise Support Programs, Program Support Center, HHS, room 12–07, 5600 Fishers Lane, Rockville, MD 20857; (301) 443–2265. (This is not a toll-free number.) HHS will mail to the interested provider an application packet, which will include instructions for completing the application. In order to maximize the opportunity to utilize a suitable property, providers should submit their written expressions of interest as soon as possible. For complete details concerning the processing of applications, the reader is encouraged to refer to the interim rule governing this program, 24 CFR part 581.

For properties listed as suitable/to be excess, that property may, if subsequently accepted as excess by GSA, be made available for use by the homeless in accordance with applicable law, subject to screening for other Federal use. At the appropriate time, HUD will publish the property in a Notice showing it as either suitable/available or suitable/unavailable.

For properties listed as suitable/unavailable, the landholding agency has decided that the property cannot be declared excess or made available for use to assist the homeless, and the property will not be available.

Properties listed as unsuitable will not be made available for any other purpose for 20 days from the date of this Notice. Homeless assistance providers interested in a review by HUD of the determination of unsuitability should call the toll free information line at 1–800–927–7588 for detailed instructions or write a letter to Ann Marie Oliva at the address listed at the beginning of this Notice. Included in the request for review should be the property address (including zip code), the date of publication in the **Federal Register**, the landholding agency, and the property number.

For more information regarding particular properties identified in this Notice (i.e., acreage, floor plan, existing sanitary facilities, exact street address), providers should contact the appropriate landholding agencies at the following addresses: *Army:* Ms. Veronica Rines, Office of the Assistant Chief of Staff for Installation Management, Department of Army, Room 5A128, 600 Army Pentagon, Washington, DC 20310, (571) 256–8145; *Coast Guard:* Commandant, United States Coast Guard, Attn: Jennifer Stomber, 2100 Second St. SW., Stop 7901, Washington, DC 20593–0001, (202) 475–5609; (These are not toll-free numbers).

Dated: May 9, 2013.

Mark Johnston,

Deputy Assistant Secretary for Special Needs.

Title V, Federal Surplus Property Program Federal Register Report for 05/17/2013

Suitable/Available Properties

Building

Alaska

Building 00001
9679 Tuluksak Rd.
Toksook AK 99679
Landholding Agency: Army
Property Number: 21201320038
Status: Excess
Comments: 1,200 sf.; armory; 60 months vacant; poor conditions

Colorado

Building 01852
6359 Barkley Ave.
Ft. Carson CO 80913
Landholding Agency: Army
Property Number: 21201320036
Status: Excess
Comments: off-site removal only; 9,822 sf.; BDE HQ; repairs needed; asbestos; secured area; contact Army for access/removal requirements

Building 01854
6370 Porter St.
Ft. Carson CO 80913
Landholding Agency: Army
Property Number: 21201320037
Status: Excess
Comments: off-site removal only; 3,800 sf.; Admin.; repairs needed; asbestos; secured area; contact Army for access/removal requirements

Building 00304
5020 Tevis St.
Ft. Carson CO 80913
Landholding Agency: Army
Property Number: 21201320039
Status: Excess
Comments: off-site removal only; 15,484 sf.; Admin.; 4 months vacant; repairs needed; asbestos; contact Army for access/removal requirements

Georgia

Building 00062
1 Camp Merrill
Dahlonega GA 31905
Landholding Agency: Army
Property Number: 21201320003
Status: Unutilized
Comments: off-site removal only; 910 sf.; sep toil/shower; poor conditions; contact Army re: removal requirements

Building 02294
7895 Alekno Street
Ft. Benning GA 31905
Landholding Agency: Army
Property Number: 21201320004
Status: Underutilized
Comments: off-site removal only; 5,614 sf.; classroom; poor conditions; contact Army re: removal requirements

Idaho

R1A11
16 Miles South
Boise ID 83634
Landholding Agency: Army
Property Number: 21201320005
Status: Excess
Comments: off-site removal only; 1,040 sf., dilapidated, repairs a must, temp. shelter, 9 months vacant, has hanta virus presence.

R1A13
16 Miles South
Boise ID 83634
Landholding Agency: Army
Property Number: 21201320015
Status: Excess
Comments: off-site removal only; 1,040 sf.; temp. shelter; 9 months vacant; dilapidated; Hanta virus; repairs a must

R1A10
16 Miles South
Boise ID 83634
Landholding Agency: Army
Property Number: 21201320041
Status: Excess
Comments: off-site removal only; 1,040 sf.; dilapidated; repairs a must; 9 months vacant; Hanta virus

R1A12
16 Miles South
Boise ID 83634
Landholding Agency: Army
Property Number: 21201320042
Status: Excess
Comments: off-site removal only; 1,040 sf.; temp. shelter; 9 months vacant; dilapidated; repairs a must; Hanta virus

R1A15
16 Miles South
Boise ID 83634
Landholding Agency: Army
Property Number: 21201320043
Status: Excess
Comments: off-site removal only; 1,040 sf.; temp. shelter; 9 months vacant; dilapidated; Hanta virus; repair a must

Kansas

Building 00620
Mitchell Terr.
Ft. Riley KS 66442
Landholding Agency: Army
Property Number: 21201320014
Status: Excess
Comments: off-site removal only; 12,640 sf.; lodging; deteriorating; asbestos

Building 09098
Vinton School Rd.
Ft. Riley KS 66442
Landholding Agency: Army
Property Number: 21201320016
Status: Excess
Comments: off-site removal only; 120 sf.; guard shack; fair/moderate conditions

Building 07856
Drum St.
Ft. Riley KS 66442
Landholding Agency: Army
Property Number: 21201320017
Status: Excess
Comments: off-site removal only; 13,493 sf.; dining facility; deteriorating; asbestos

Building 07636
Normandy Dr.
Ft. Riley KS 66442
Landholding Agency: Army
Property Number: 21201320018
Status: Excess
Comments: off-site removal only; 9,850 sf.; deteriorating; asbestos

Building 05309
Ewell St.
Ft. Riley KS 66442
Landholding Agency: Army
Property Number: 21201320019
Status: Excess
Comments: off-site removal only; 23,784 sf.; lodging; deteriorating; asbestos

Building 00918
Caisson Hill Rd.
Ft. Riley KS 66442
Landholding Agency: Army
Property Number: 21201320020
Status: Excess
Comments: off-site removal only; 3,536 sf.; admin. general purpose; deteriorating; possible contamination; secured area; however, prior approval to access is needed; contact Army for more info.

Building 00621
Mitchell Terr.
Ft. Riley KS 66442
Landholding Agency: Army
Property Number: 21201320021
Status: Excess
Comments: off-site removal only; 12,640 sf.; lodging; deteriorating; asbestos

Massachusetts

7 Buildings
Lyra Drive
S. Weymouth MA 02190
Landholding Agency: Coast Guard
Property Number: 88201320004
Status: Excess
Directions: 213, 214, 216, 217, 218, 219, 220
Comments: off-site removal only; sf. varies; housing; poor conditions; contact Coast Guard for more info. on a specific property & accessibility/removal requirements

New York

2 Buildings
Wheeler-Sack Army Airfield
Ft. Drum NY 13602
Landholding Agency: Army
Property Number: 21201320032
Status: Underutilized
Directions: Bldgs. 2071 & 2075 each are 160 sf.
Comments: no future use for properties; off-site removal only; poor conditions; secured area; contact Army re: accessibility/removal requirements

2 Buildings
Hanger Access Drive
Ft. Drum NY 13602
Landholding Agency: Army
Property Number: 21201320033
Status: Underutilized
Directions: Bldgs. 19711 & 19712 are each 3,024 sf.
Comments: no future Army use; off-site removal only; fair/moderate conditions; secured area; contact Army re: accessibility/removal requirements

2 Buildings
Wheeler-Sack Army
Ft. Drum NY 13602
Landholding Agency: Army
Property Number: 21201320034
Status: Unutilized
Directions: Bldgs. 2908 & 2909 are each 11,809 sf.
Comments: no future Army use; off-site removal only; poor conditions; secured area; contact Army re: accessibility/removal requirements

Pennsylvania

Building 01015
11 Hap Arnold Blvd.
Tobyhanna PA 18466
Landholding Agency: Army
Property Number: 21201320031
Status: Unutilized
Comments: off-site removal only; 3,120 sf.; recruiting station; 1 month vacant; poor conditions; asbestos; secured area; contact Army for more info.

Building 01001
11 Hap Arnold Blvd.
Tobyhanna PA 18466
Landholding Agency: Army
Property Number: 21201320035
Status: Excess
Comments: off-site removal only; 4,830 sf.; youth center/admin.; 1 month vacant; poor conditions; asbestos; secured area; contact Army for more info.

Virginia

Building 3327
1410 Byrd St.
Ft. Lee VA 23801
Landholding Agency: Army
Property Number: 21201320008
Status: Excess
Comments: off-site removal only; 10,800 sf.; repairs needed; contamination; secured area; contact Army for more info.

Building 3325
Byrd St. btw. 13th & 16th Sts.
Ft. Lee VA 23801
Landholding Agency: Army
Property Number: 21201320009
Status: Excess
Comments: off-site removal only; 5,829 sf.; repairs needed; contamination; secured; contact Army for more info.

Building 3324
Byrd St. btw. 13th & 16th Sts.
Ft. Lee VA 23801
Landholding Agency: Army
Property Number: 21201320010
Status: Excess
Comments: off-site removal only; 5,092 sf.; repairs needed; secured area; contact Army for more info.

Building 3206
Corner of Adams Ave. & 13th St.
Ft. Lee VA 23801
Landholding Agency: Army
Property Number: 21201320011
Status: Excess
Comments: off-site removal only; 55,979 sf.; repairs needed; secured area; contamination; contact Army for more info.

Building 3108
Corner of Adam & 13th St.
Ft. Lee VA 23801
Landholding Agency: Army
Property Number: 21201320012
Status: Excess
Comments: off-site removal only; 51,718 sf.; repairs needed; secured area; contamination; contact Army for more info.

Building 3701
16th & Byrd St.
Ft. Lee VA 23801
Landholding Agency: Army
Property Number: 21201320013
Status: Excess
Comments: off-site removal only; 40,920 sf.; repairs needed; secured area; contact Army for more info.

Unsuitable Properties

Building

California

2 Buildings
Military Ocean Terminal Concord
Concord CA 94520
Landholding Agency: Army
Property Number: 21201320023

Status: Unutilized
Directions: 000A3 & 00E82
Comments: public access denied & no alternative method to gain access w/out compromising nat'l security
Reasons: Secured Area

Buildings 00177 & 00185
Tufa Dr.
Herlong CA 96113
Landholding Agency: Army
Property Number: 21201320040
Status: Unutilized
Comments: public access denied & no alternative method to gain access w/out compromising nat'l security
Reasons: Secured Area

Colorado

Building 00593
45825 Hay 96 East
Pueblo CO 81006
Landholding Agency: Army
Property Number: 21201320006
Status: Underutilized
Comments: public access denied & no alternative method w/out compromising nat'l sec.
Reasons: Secured Area

Indiana

2 Buildings
3008 Hospital Rd.
Edinburgh IN 46124
Landholding Agency: Army
Property Number: 21201320002
Status: Unutilized
Directions: 00126 & 00331
Comments: located in secured area; public access denied & no alternative method to gain access w/out compromising nat'l security
Reasons: Secured Area

Kentucky

Building 6117
Eisenhower Ave.
Ft. Knox KY 40121
Landholding Agency: Army
Property Number: 21201320026
Status: Unutilized
Comments: w/in Ft. Know cantonment area; public access denied & no alternative method to gain access w/out compromising nat'l security
Reasons: Secured Area

Building 3304
46th & Indiana Ave.
Ft. Campbell KY 42223
Landholding Agency: Army
Property Number: 21201320027
Status: Underutilized
Comments: secured area; public access denied & no alternative method to gain access w/out compromising nat'l security
Reasons: Secured Area

Building 6908
A Shau Valley Rd.
Ft. Campbell KY 42223
Landholding Agency: Army
Property Number: 21201320028
Status: Unutilized
Comments: public access denied & no alternative method to gain access w/out compromising nat'l security
Reasons: Secured Area

Missouri

4 Buildings
Ft. Leonard Wood
Ft. Leonard Wood MO 65473
Landholding Agency: Army
Property Number: 21201320022
Status: Unutilized
Directions: 05343, 05382, 05394, 06501
Comments: public access denied & no alternative method to gain access w/out compromising nat'l security
Reasons: Secured Area

North Carolina

7 Buildings
Ft. Bragg
Ft. Bragg NC 28310
Landholding Agency: Army
Property Number: 21201320001
Status: Underutilized
Directions: 21817, A5886, C8310, D2302, D2307, D2502, D2507
Comments: military reservation; access limited to military personnel only; access denied & no alternative method to gain access w/out compromising nat'l security
Reasons: Secured Area

Virginia

26 Building
Null
Radford VA 24143
Landholding Agency: Army
Property Number: 21201320007
Status: Unutilized
Directions: 1506A, 1506B, 1609, 1609A, 1609B, 1609C, 1616, 1616A, 1616B, 1616C, 2500, 2501, 2506, 2508, 2510, 2512, 2515, 2516, 2518, 2555, 2555A, 2560A, 2558, 2560, 3740, 9379
Comments: W/in restricted area, public assess denied & no alter. method w/out compromising nat'l sec.
Reasons: Secured Area

Washington

5 Buildings
Division Dr.
JBLM WA 98433
Landholding Agency: Army
Property Number: 21201320024
Status: Underutilized
Directions: 03131; 03135, 03139, 03317, 03320
Comments: secured military cantonment area; public access denied & no alternative method to gain access w/out compromising nat'l security
Reasons: Secured Area

3 Buildings
Libbey Ave.
JBLM WA 98433
Landholding Agency: Army
Property Number: 21201320025
Status: Underutilized
Directions: 03316, 03322, 03330
Comments: secured military cantonment area; public access denied & no alternative method to gain access w/out compromising nat'l security
Reasons: Secured Area

7 Buildings
Spangler Ave.
JBLM WA 98433
Landholding Agency: Army
Property Number: 21201320029
Status: Underutilized
Directions: 03105, 03107, 03117, 03120, 03129, 03133, 03138
Comments: secured military cantonment area; public access denied & no alternative method to gain access w/out compromising nat'l security
Reasons: Secured Area

Building 03136
Joint Base Lewis-McChord
JBLM WA 98433
Landholding Agency: Army
Property Number: 21201320030
Status: Underutilized
Comments: secured military cantonment; public access denied & no alternative method to gain access w/out compromising nat'l security
Reasons: Secured Area

[FR Doc. 2013–11449 Filed 5–16–13; 8:45 am]

BILLING CODE 4210–67–P

DEPARTMENT OF THE INTERIOR

Fish and Wildlife Service

[FWS–R6–ES–2013–N107; FXES11130600000D2–123–FF06E00000]

Endangered and Threatened Wildlife and Plants; Recovery Permit Applications

AGENCY: Fish and Wildlife Service, Interior.

ACTION: Notice of availability; request for comments.

SUMMARY: We, the U.S. Fish and Wildlife Service, invite the public to comment on the following application to conduct certain activities with endangered or threatened species. With some exceptions, the Endangered Species Act of 1973, as amended (Act), prohibits activities with endangered and threatened species unless a Federal permit allows such activity. The Act requires that we invite public comment before issuing these permits.

DATES: To ensure consideration, please send your written comments by June 17, 2013.

ADDRESSES: You may submit comments or requests for copies or more information by any of the following methods. Alternatively, you may use one of the following methods to request hard copies or a CD–ROM of the documents. Please specify the permit you are interested in by number (e.g., Permit No. TE–047252).

- *Email: permitsR6ES@fws.gov.* Please refer to the respective permit number (e.g., Permit No. TE–047252) in the subject line of the message.
- *U.S. Mail:* Ecological Services, U.S. Fish and Wildlife Service, P.O. Box 25486–DFC, Denver, CO 80225
- *In-Person Drop-off, Viewing, or Pickup:* Call (303) 236–4212 to make an appointment during regular business hours at 134 Union Blvd., Suite 645, Lakewood, CO 80228.

FOR FURTHER INFORMATION CONTACT: Kathy Konishi, Permit Coordinator, Ecological Services, (303) 236–4212 (phone); *permitsR6ES@fws.gov* (email).

SUPPLEMENTARY INFORMATION:

Background

The Act (16 U.S.C. 1531 *et seq.*) prohibits activities with endangered and threatened species unless a Federal permit allows such activity. Along with our implementing regulations in the Code of Federal Regulations (CFR) at 50 CFR part 17, the Act provides for permits, and requires that we invite public comment before issuing these permits.

A permit granted by us under section 10(a)(1)(A) of the Act authorizes the permittee to conduct activities with United States endangered or threatened species for scientific purposes, enhancement of propagation or survival, or interstate commerce (the latter only in the event that it facilitates scientific purposes or enhancement of propagation or survival). Our regulations implementing section 10(a)(1)(A) for these permits are found at 50 CFR 17.22 for endangered wildlife species, 50 CFR 17.32 for threatened wildlife species, 50 CFR 17.62 for endangered plant species, and 50 CFR 17.72 for threatened plant species.

Application Available for Review and Comment

We invite local, State, and Federal agencies, and the public to comment on the following application. Documents and other information the applicant has submitted are available for review, subject to the requirements of the Privacy Act (5 U.S.C. 552a) and Freedom of Information Act (5 U.S.C. 552).

Permit Application Number: TE–047252

Applicant: SWCA Environmental Consultants, 295 Interlocken Blvd., Suite 300, Broomfield, CO 80021.

The applicant requests the amendment of an existing permit to take (capture, handle, and release) Least tern *(Sterna antillarum)* under permit TE–047252 for the purpose of enhancing the species' survival.

National Environmental Policy Act

In compliance with the National Environmental Policy Act (42 U.S.C. 4321 *et seq.*), we have made an initial determination that the proposed activities in this permit are categorically excluded from the requirement to prepare an environmental assessment or environmental impact statement (516 DM 6 Appendix 1, 1.4C(1)).

Public Availability of Comments

All comments and materials we receive in response to this request will be available for public inspection, by appointment, during normal business hours at the address listed in the **ADDRESSES** section of this notice.

Before including your address, phone number, email address, or other personal identifying information in your comment, you should be aware that your entire comment—including your personal identifying information—may be made publicly available at any time. While you can ask us in your comment to withhold your personal identifying information from public review, we cannot guarantee that we will be able to do so.

Authority

We provide this notice under section 10 of the Act (16 U.S.C. 1531 *et seq.*)

Dated: May 13, 2013.

Michael G. Thabault,

Assistant Regional Director, Mountain-Prairie Region.

[FR Doc. 2013–11778 Filed 5–16–13; 8:45 am]

BILLING CODE 4310–55–P

DEPARTMENT OF THE INTERIOR

Bureau of Land Management

[LLAZC01000.L51010000.FX0000. LVRWA09A2310.241A; AZA 32315AA]

Notice of Availability of the Final Environmental Impact Statement for the Proposed Mohave County Wind Farm Project, AZ

AGENCY: Bureau of Land Management, Interior.

ACTION: Notice of Availability.

SUMMARY: In accordance with the National Environmental Policy Act of 1969, as amended (NEPA), and the Federal Land Policy and Management Act of 1976, as amended (FLPMA), the Bureau of Land Management (BLM) has prepared a Final Environmental Impact Statement (EIS) for the proposed Mohave County Wind Farm Project (Project) and by this notice is announcing its availability.

DATES: The Final EIS will be available at the locations listed below for 30 days from the date the Environmental Protection Agency publishes the Notice of Availability.

ADDRESSES: Copies of the Final EIS for the proposed Project have been mailed to cooperating agencies and other stakeholders. Copies are available at the BLM Kingman Field Office, 2755 Mission Boulevard, Kingman, AZ 86401, and at the BLM Arizona State Office, One North Central Avenue, Suite 800, Phoenix, AZ 85004. The Final EIS is also available at the following public libraries:

- Kingman Public Library, 3269 North Burbank Street, Kingman, AZ 86402–7000
- Kingman Valle Vista Community Library, 7264 Concho Dr. Ste. B, Kingman, AZ 86401
- Hualapai Cultural Center, 800 W. Route 66, Peach Springs, AZ 86434
- Boulder City Library, 701 Adams Blvd., Boulder City, NV 89005
- Dolan Springs Public Library, 16140 Pierce Ferry Road, Dolan Springs, AZ 86441–0427

The Final EIS may also be viewed at the following Web site: *http://www.blm.gov/az/st/en/prog/energy/wind/mohave.html*.

FOR FURTHER INFORMATION CONTACT: Jackie Neckels, Environmental Coordinator, telephone 602–417–9262; address BLM Arizona State Office, Renewable Energy Coordination Office, One North Central Avenue, Suite 800, Phoenix, AZ 85004–4427; or email at *KFO_WindEnergy@blm.gov*. Persons who use a telecommunications device for the deaf (TDD) may call the Federal Information Relay Service (FIRS) at 1–800–877–8339 to contact the above individual during normal business hours. The FIRS is available 24 hours a day, 7 days a week, to leave a message or question for the above individual. You will receive a reply during normal business hours.

SUPPLEMENTARY INFORMATION: The BLM is the lead Federal agency under NEPA for the proposed Project. Cooperating agencies include the Western Area Power Administration (Western); Bureau of Reclamation—Lower Colorado Region (Reclamation); National Park Service—Lake Mead National Recreation Area; Mohave County; Arizona Game and Fish Department; and the Hualapai Tribe Department of Cultural Resources.

The BLM's purpose and need is to respond to BP Wind Energy North America's application for a right-of-way (ROW) under FLPMA to construct, operate, and maintain a wind-farm project. In accordance with Section 1702(c) of FLPMA, public lands administered by the BLM are to be managed for multiple-use that takes into account the long-term needs of future generations for renewable and non-renewable resources. Approval of a ROW grant for the wind farm would assist the BLM in meeting the objectives of the Energy Policy Act and Secretarial Order 3287A1, that establishes

development of environmentally responsible renewable energy as a priority for the Department of the Interior. The BLM's decision is to deny, approve, or approve with modifications the ROW for the proposed wind farm.

The applicant, BP Wind Energy North America, applied for a ROW to construct, operate, maintain, and decommission a 500-megawatt (MW) wind farm, including turbine generators and associated infrastructure, on approximately 38,099 acres of public lands and approximately 8,960 acres of land managed by Reclamation, totaling approximately 47,059 acres of Federal land. The Project area is located in the White Hills area 40 miles northwest of Kingman, Arizona, 9 miles south of the Colorado River, and 20 miles southeast of Hoover Dam. A map of the proposed Project area and a legal description are available on the BLM Web site at *http://www.blm.gov/az/st/en/prog/energy/wind/mohave.html*.

The Project is proposed to consist of up to 283 turbines, access roads, and ancillary facilities. The turbine generators would be selected from those with a power output ranging from 1.5 to 3.0 MW each. To the extent possible, existing roads would be used to reduce potential impacts associated with the construction of new roads. Roads would be improved as needed, and the road network would be supplemented with internal access/service roads to each wind turbine.

Proposed ancillary facilities include pad-mounted transformers, an underground 34.5-kilovolt (kV) electrical collection system between the turbines, and distribution connector lines (either underground or above-ground) tying the turbine strings to either a 345-kV or a 500-kV electrical substation. This would provide interconnection with the regional power grid through the substation to a new switchyard at one of two major electric transmission lines transecting the Project area. The lines, which are administered by Western, are the 345-kV Liberty-Mead line and the 500-kV Mead-Phoenix line. Scoping was initiated with the publication of a Notice of Intent (NOI) in the **Federal Register** on November 20, 2009 (74 FR 60289), and conducted from November 20, 2009, through January 8, 2010. Three public meetings and an agency meeting were held in Kingman, Dolan Springs, and White Hills, Arizona. A supplemental scoping period was initiated with the publication of a second NOI on July 26, 2010 (75 FR 43551) that concluded on September 9, 2010. Four public scoping meetings were held during the supplemental scoping period: One at each of the three original scoping-meeting communities and an additional meeting in Peach Springs, Arizona, at the Hualapai Tribe Cultural Center. The BLM considered all input received from the start of the first scoping period (November 20, 2009) to the end of the second scoping period (September 9, 2010).

Public and cooperating agency concerns/comments identified the following issues (percentage of comments for each issue in parentheses): Biological resources (23 percent); Project description (17 percent); socioeconomics (9 percent); land use, recreation, and transportation (8 percent); NEPA process (7 percent); visual resources (6 percent); Project alternatives (5 percent); cumulative effects (4 percent); noise (4 percent); Project need (3 percent); air quality (3 percent); geology and minerals (3 percent); water resources (3 percent); cultural resources (2 percent); and hazardous materials and safety (1 percent). These issues were addressed in the Draft EIS released for public comment on April 27, 2012. The 45-day comment period for the Draft EIS closed on June 11, 2012.

The Final EIS considered the impacts of the proposed action, other action alternatives, and a no action alternative. The Alternative A (proposed action) wind-farm site would encompass approximately 38,099 acres of public lands and approximately 8,960 acres of land managed by Reclamation. As with all action alternatives, Project features within the wind-farm site would include turbines aligned within corridors, access roads, electrical collection system, an operations and maintenance building, two temporary laydown/staging areas (with temporary batch plant operations), two substations, and a switchyard. The number of turbines constructed would vary depending on the turbine type that is installed, but Alternative A proposes more turbines than the other alternatives. Alternative A could support development of a maximum of 283 turbines. Western's Federal action would be to execute an interconnection agreement, and design, construct, own, operate, and maintain the Project switchyard and physical interconnection to the existing transmission line under all alternatives.

The Alternative B wind-farm site would encompass approximately 30,872 acres of public lands and approximately 3,848 acres of land managed by Reclamation. Alternative B reduces the wind-farm site footprint and has fewer turbines than Alternative A, with the intent of reducing visual and noise impacts on Lake Mead National Recreation Area primarily and secondarily on private property. The number of turbines constructed would vary depending on the turbine type that is installed, but Alternative B could support development of a maximum of 208 turbines. This alternative would have the fewest number of turbines on Reclamation land compared to Alternatives A and C. Turbine corridors on public lands would either be shortened or eliminated on the north, east, and south sides of the Project area to increase the distance of turbines from private land and National Park Service land.

The Alternative C wind-farm site would encompass approximately 30,178 acres of public lands and approximately 5,124 acres of land managed by Reclamation. Alternative C also reduces the wind-farm site footprint and has fewer turbines than Alternative A, with the intent of reducing visual and noise impacts primarily on private property and secondarily on Lake Mead National Recreation Area. The number of turbines constructed would vary depending on the turbine type that is installed, but Alternative C could support development of a maximum of 208 turbines. Alternative C differs from Alternative B in that there would be one additional turbine corridor on Reclamation land, but the corridors on public lands on the eastern side of the wind-farm site would be shortened even further to increase the distance of turbines from private lands.

Alternative D is the no action alternative, which provides a baseline against which action alternatives can be compared. Alternative D includes an analysis of effects from not developing the Project. Alternative D assumes that no actions associated with the Project would occur, and no ROWs or interconnections would be granted. The public lands would continue to be managed in accordance with the Kingman Field Office Resource Management Plan, and the Reclamation-administered lands would continue to be managed by Reclamation. Capacity on Western's transmission lines would remain available for other projects.

Alternative E, BLM's preferred alternative, is a wind-farm site that represents a combination of the proposed action, Alternative A, and Alternative B. This alternative would consist of approximately 35,329 acres of public lands and approximately 2,781 acres of Reclamation-administered land. The preferred alternative is smaller than Alternative A but larger than Alternative B. The preferred alternative has 4,457 more acres of public lands and 1,067

fewer acres of Reclamation land than Alternative B. The preferred alternative considered factors to avoid, minimize, and mitigate identified impacts to resources such as visual, noise, and wildlife. The preferred alternative removed turbines in the northwest section of the Project site due to identified golden eagle nests. These removals also addressed noise and visual concerns from the National Park Service, Lake Mead National Recreation Area. The preferred alternative also implements a minimum ¼-mile set back from private land and in some instances a larger distance due to visual and noise resource concerns. To further protect golden eagles, this alternative excludes turbines within a 1.25-mile area around golden eagle nests in the northwest portion of the proposed facility and provides an additional buffer that curtails turbine operation during nesting season and eagle activity, i.e., during daylight hours. The preferred alternative allows for flexibility on the size and number of turbines (1.5 MW to 3.0 MW) to allow the developer to meet Western's 425 MW or 500 MW nameplate capacity. The generation size depends on the interconnection to either the 345-kV or 500-kV transmission line.

The BLM has consulted, and will continue to consult, with Indian tribes on a government-to-government basis in accordance with Executive Order 13175 and other policies. Tribal concerns, including impacts on Indian trust assets and potential impacts to cultural resources were, and will continue to be, given due consideration.

Authority: 40 CFR 1506.6 and 1506.10.

Raymond Suazo,

State Director.

[FR Doc. 2013–11826 Filed 5–16–13; 8:45 am]

BILLING CODE 4310–32–P

DEPARTMENT OF THE INTERIOR

Bureau of Land Management

[LLCON06000 L16100000.DP0000]

Notice of Availability of the Draft Resource Management Plan and Environmental Impact Statement for the Dominguez-Escalante National Conservation Area in Colorado

AGENCY: Bureau of Land Management, Interior.

ACTION: Notice of availability.

SUMMARY: In accordance with the National Environmental Policy Act of 1969, as amended, and the Federal Land Policy and Management Act of 1976, as amended, the Bureau of Land Management (BLM) has prepared a Draft Resource Management Plan (RMP) and Draft Environmental Impact Statement (EIS) for the Dominguez-Escalante National Conservation Area (D–E NCA) and by this notice is announcing the opening of the public comment period. Congress designated the D–E NCA, as well as the Dominguez Canyon Wilderness (Wilderness), through the Omnibus Public Lands Management Act of 2009 (Omnibus Act). The Omnibus Act also established the purpose of the D–E NCA to ''conserve and protect for the benefit and enjoyment of present and future generations—the unique and important resources and values of the land and the water resources of area streams.''

DATES: To ensure that comments will be considered, the BLM must receive written comments on the Draft RMP/Draft EIS within 90 days following the date the Environmental Protection Agency publishes the notice of the Draft RMP/Draft EIS in the **Federal Register**. The BLM will announce future meetings or hearings and any other public participation activities at least 15 days in advance through public notices, media releases, and/or mailings.

ADDRESSES: You may submit comments related to the D–E NCA Draft RMP/Draft EIS by any of the following methods:

- *via the RMP Web site: http://www.blm.gov/co/st/en/nca/denca/denca_rmp.html.*
- *email: dencarmp@blm.gov.*
- *fax:* 970–244–3083.
- *mail:* BLM—D–E NCA RMP, 2815 H Road, Grand Junction, Colorado 81506.

Copies of the D–E NCA Draft RMP/Draft EIS are available in the BLM's Grand Junction Field Office at 2815 H Road, Grand Junction, CO 81506; the BLM's Uncompahgre Field Office at 2465 South Townsend Ave., Montrose, CO 81401; or on the Web site: *http://www.blm.gov/co/st/en/nca/denca/denca_rmp.html.*

FOR FURTHER INFORMATION CONTACT: Ben Blom, Planning Team Lead; telephone: 970–244–3188; Grand Junction Field Office: see address above; email: *bblom@blm.gov.* Persons who use a telecommunications device for the deaf (TDD) may call the Federal Information Relay Service (FIRS) at 1–800–877–8339 to contact the above individual during normal business hours. The FIRS is available 24 hours a day, 7 days a week, to leave a message or question with the above individual. You will receive a reply during normal business hours.

SUPPLEMENTARY INFORMATION: The BLM prepared the D–E NCA Draft RMP/Draft EIS to evaluate and revise the current management decisions for public lands and resources within the D–E NCA planning area. A National Conservation Area, such as the D–E NCA, is an area designated by Congress, generally, to conserve, protect, enhance, and properly manage the resources and values for which it was designated for the benefit and enjoyment of present and future generations. The D–E NCA was established by the Omnibus Public Lands Management Act of 2009. The D–E NCA is currently managed under the 1987 Grand Junction Record of Decision and Approved RMP, as amended; the 1989 Uncompahgre Basin Record of Decision and Approved RMP, as amended; and the BLM's 2010 Interim Management Policy for the D–E NCA and Dominguez Canyon Wilderness. Decisions made through this planning process must also stay within the framework outlined in the enabling legislation which created this NCA.

The D–E NCA planning area includes approximately 218,000 acres of State, private and BLM-managed public lands located in Delta, Mesa, and Montrose counties in western Colorado. Within the D–E NCA planning area, the BLM administers approximately 210,000 acres of federal surface and subsurface estate. Management decisions made as a result of the RMP will apply only to the BLM-administered public lands in the D–E NCA planning area.

The formal public scoping process for the RMP/EIS began on August 3, 2010, with the publication of a Notice of Intent in the **Federal Register**, and ended on October 1, 2010. The Secretary of the Interior established an advisory council composed of ten residents representing various communities and interests throughout the surrounding three-county area to assist the BLM in developing and implementing this RMP/EIS. The council met 24 times in 2011 and 2012, with all meetings open to the public.

The BLM held two public workshops for travel management data collection in fall 2010 to give the public an opportunity to review the route inventory for completeness and accuracy, as well as offer suggestions for changes to current routes or the addition of new routes that would complement the existing system. The BLM held two additional workshops regarding socioeconomics in fall 2011.

Over the course of the planning process, the BLM maintained a Plan Web site, produced a series of monthly newsletters, distributed press releases, and conducted radio interviews. All materials will be available on the D–E

NCA RMP Web site, and the public will have the opportunity to comment online. Paper copies and CDs of the Draft RMP will be available at BLM Field Offices in Montrose and Grand Junction, Colorado. Major issues considered in the Draft RMP/Draft EIS include geological and paleontological resources; vegetation and soils; wildlife and terrestrial habitat; aquatic, wetlands and riparian areas; water resources; cultural resources; wilderness; lands with wilderness characteristics; visual resources; recreation; science and education; livestock grazing; transportation and travel management; lands and realty; and special designations.

The Draft RMP/Draft EIS evaluates, in detail, five alternatives, including the No Action Alternative (Alternative A) and four action alternatives (Alternatives B, C, D, and E). The BLM has identified Alternative E as the preferred alternative. Identification of this alternative, however, does not represent final agency direction, and the Proposed RMP may reflect changes or adjustments based on information received from public comment, from new information, or from changes in BLM policies or priorities. The Proposed RMP may include objectives and actions described in the other analyzed alternatives. Alternative A would retain the current management goals, objectives and direction specified in the 1987 Grand Junction RMP and 1989 Uncompahgre Basin RMP, where the management is consistent with the Omnibus Act. Alternative B focuses on allowing natural processes to influence the condition of resources, which would involve placing additional restrictions on allowable uses to manage the D–E NCA. Recreation would be managed largely through Extensive Recreation Management Areas, where the BLM would commit to providing activity opportunities but not specific recreation outcomes or settings. Alternative C emphasizes active management for biological restoration and cultural resource protection. The BLM would set objectives that provide a high level of resource protection and restoration. Only two areas would be managed as Special Recreation Management Areas, with the rest of the D–E NCA not managed as recreation areas. Alternative D would also emphasize an active management approach for biological restoration and cultural resource protection, but with objectives that provide a lower level of restoration and protection for those resources as compared to Alternative C. Resource uses, particularly trail-based recreation and livestock grazing, would be emphasized. The enabling legislation for the D–E NCA identified livestock grazing as a use of the D–E NCA that shall be managed similarly to how it is managed on other lands under the BLM's jurisdiction.

The BLM's identified preferred alternative is Alternative E, which is a mix of the other four alternatives that is based on the draft impact assessment. Under this alternative, the BLM would set measurable goals for biological restoration and cultural resource protection. Objectives for resource protection and restoration would be less ambitious than in Alternative C but more ambitious than in Alternative D. Recreation would be managed by using a mix of Extensive Recreation Management Areas (3) and Special Recreation Management Areas (4).

Pursuant to 43 CFR 1610.7–2(b), this notice announces a concurrent public comment period on proposed Areas of Critical Environmental Concern (ACEC). There are currently two ACECs within the D–E NCA. These are the Gunnison Gravels ACEC (5 acres) and the Escalante Canyon ACEC (1.895 acres). Under Alternative E (the BLM preferred alternative), the BLM would retain the Escalante Canyon ACEC and propose one new ACEC, the River Rims ACEC. Proposed ACECs and the resource use limitations that would occur if formally designated are as follows:

- Big Dominguez Canyon ACEC—5,626 acres, Alternative C: manage livestock grazing and trailing to protect unique and sensitive rare plants and vegetative communities; minimize impacts to rare plants and vegetative communities from recreation use through route designation and group size limitations.
- Escalante Canyon ACEC—1,895 acres in Alternative A, 2,281 acres in Alternative C and E, and 11,202 acres in Alternative D: continue livestock grazing at current levels, unless studies determine that threatened and endangered plant species and unique plant associations or their potential habitats are being degraded (Alternative A); manage livestock grazing and trailing in the Escalante Canyon ACEC to protect unique and sensitive plant resources (Alternatives C, D, and E); provide informational signs to identify potential recreational hazards (Alternatives A, C, D, and E); prohibit woodland harvests, so as to prevent accidental destruction of listed species and unique plant associations (Alternatives A, C, D, and E); prohibit surface occupancy (Alternative A); prohibit surface-disturbing activities (Alternative C); apply site-specific relocation restrictions (Alternatives D and E); close the area to development of major utilities to prevent accidental destruction of listed species and unique plant associations and maintain scenic qualities (Alternative A); provide the public with outdoor classroom opportunities related to the area's unique and sensitive plants, wildlife, fish, geological and cultural resources (Alternatives D and E); reduce, as much as practicable, barriers to fish and wildlife movement through Escalante Canyon (Alternatives D and E).
- Gibbler Mountain ACEC—1,310 acres, Alternative D: prohibit surface-disturbing activities within 100 meters of known, significant paleontological sites and within 200 meters of BLM sensitive plant occurrences; reduce, as much as practicable, route density within 200 meters of BLM sensitive plant occurrences.
- Gunnison Gravels ACEC—5 acres in Alternative A, 15 acres in Alternative D: prohibit surface occupancy (Alternative A); prohibit surface-disturbing activities (Alternative D); close the area to mineral materials sales or free use permits (Alternative A); prohibit the collection of rocks and minerals (Alternative D); manage as unsuitable for public utilities (Alternative A).
- Gunnison River ACEC—17,316 acres, Alternative D: prohibit surface-disturbing activities; manage livestock grazing and trailing to protect unique and sensitive plant and wildlife resources; manage the hydrological and riparian resources of the Gunnison River to promote delisting of federally listed fish species; reduce, as much as practicable, route density within 200 meters of Colorado hookless cactus.
- River Rims ACEC—4,916 acres in Alternative C; 5,405 acres in Alternative E: prohibit surface-disturbing activities (Alternatives C and E); manage livestock grazing and trailing to protect unique and sensitive plant resources (Alternatives C and E); prohibit commercial, organized group, and competitive special recreation permits (Alternative C); prohibit competitive special recreation permits but allow low-impact commercial and organized group special recreation permits (Alternative D); close all BLM routes to the public within 200 meters of Colorado hookless cactus (Alternatives C and E).

Please note that public comments and information submitted, including names, street addresses, and email addresses of persons who submit comments, will be available for public review and disclosure at the above address during regular business hours

(8:00 a.m. to 4:00 p.m.), Monday through Friday, except holidays.

Before including your address, phone number, email address, or other personal identifying information in your comment, you should be aware that your entire comment—including your personal identifying information—may be made publicly available at any time. While you can ask us in your comment to withhold your personal identifying information from public review, we cannot guarantee that we will be able to do so.

Authority: 40 CFR 1506.6, 40 CFR 1506.10, 43 CFR 1610.2.

Helen M. Hankins,

BLM Colorado State Director.

[FR Doc. 2013–11776 Filed 5–16–13; 8:45 am]

BILLING CODE 4310–JB–P

DEPARTMENT OF THE INTERIOR

Bureau of Land Management

[LLMT926000–L143000000–NJ0000]

Notice of Filing of Plats of Survey; Montana

AGENCY: Bureau of Land Management, Interior.

ACTION: Notice of filing of plats of survey.

SUMMARY: The Bureau of Land Management (BLM) will file the plat of survey of the lands described below in the BLM Montana State Office, Billings, Montana, on June 17, 2013.

DATES: Protests of the survey must be filed before June 17, 2013 to be considered.

ADDRESSES: Protests of the survey should be sent to the Branch of Cadastral Survey, Bureau of Land Management, 5001 Southgate Drive, Billings, Montana 59101–4669.

FOR FURTHER INFORMATION CONTACT: Marvin Montoya, Cadastral Surveyor, Branch of Cadastral Survey, Bureau of Land Management, 5001 Southgate Drive, Billings, Montana 59101–4669, telephone (406) 896–5124 or (406) 896–5009, *Marvin_Montoya@blm.gov*. Persons who use a telecommunications device for the deaf (TDD) may call the Federal Information Relay Service (FIRS) at 1–800–877–8339 to contact the above individual during normal business hours. The FIRS is available 24 hours a day, 7 days a week, to leave a message or question with the above individual. You will receive a reply during normal business hours.

SUPPLEMENTARY INFORMATION: This survey was executed at the request of the Bureau of Land Management, Dillon Field Office Manager, Dillon, Montana, and was necessary to determine Federal interest lands.

The lands we surveyed are:

Principal Meridian

T. 2 S., R. 3 W.

The plat, in two sheets, representing the dependent resurvey of M.S. No. 551, Strawberry Lode; M.S. No. 780, Strawberry Lode; M.S. No.781, Strawberry Extension Lode; M.S. No. 2599B, Clipper Mill Site; M.S. No. 2617B, Rustler Mill Site; M.S. No. 5855B, Cleveland Mill Site and portions of M.S. No. 5303, Pony Lode and M.S. No. 6937, Pan American Lode, Township 2 South, Range 3 West, Principal Meridian, Montana, was accepted May 7, 2013.

We will place a copy of the plat, in two sheets, and related field notes we described in the open files. They will be available to the public as a matter of information. If the BLM receives a protest against this survey, as shown on this plat, in two sheets, prior to the date of the official filing, we will stay the filing pending our consideration of the protest. We will not officially file this plat, in two sheets, until the day after we have accepted or dismissed all protests and they have become final, including decisions or appeals.

Authority: 43 U.S.C. chapter 3.

James D. Claflin,

Chief Cadastral Surveyor, Division of Resources.

[FR Doc. 2013–11781 Filed 5–16–13; 8:45 am]

BILLING CODE 4310–DN–P

DEPARTMENT OF THE INTERIOR

National Park Service

[NPS–WASO–NRNHL–12901; PPWOCRADI0, PCU00RP14.R50000]

National Register of Historic Places; Notification of Pending Nominations and Related Actions

Nominations for the following properties being considered for listing or related actions in the National Register were received by the National Park Service before April 20, 2013. Pursuant to section 60.13 of 36 CFR part 60, written comments are being accepted concerning the significance of the nominated properties under the National Register criteria for evaluation. Comments may be forwarded by United States Postal Service, to the National Register of Historic Places, National Park Service, 1849 C St. NW., MS 2280, Washington, DC 20240; by all other carriers, National Register of Historic Places, National Park Service,1201 Eye St. NW., 8th floor, Washington, DC 20005; or by fax, 202–371–6447. Written or faxed comments should be submitted by June 3, 2013. Before including your address, phone number, email address, or other personal identifying information in your comment, you should be aware that your entire comment—including your personal identifying information—may be made publicly available at any time. While you can ask us in your comment to withhold your personal identifying information from public review, we cannot guarantee that we will be able to do so.

Dated: April 23, 2013.

J. Paul Loether,

Chief, National Register of Historic Places/National Historic Landmarks Program.

ALASKA

Lake and Peninsula Borough-Census Area

Wassillie Trefon Dena'ina Fish Cache, One Park Pl., Port Alsworth, 13000348

ARKANSAS

Conway County

Moose Addition Neighborhood Historic District, Roughly bounded by W. Valley, S. Moose, Green, Brown & S. Division Sts., Morrillton, 13000349

Hempstead County

Mounds Cemetery, Address Restricted, Columbus, 13000350

Logan County

Booneville Commercial Historic District, E. side of 100 & 200 blks. of N. Broadway Ave., Booneville, 13000351

HAWAII

Honolulu County

Marconi Wireless Telegraphy Station, 56–1095 Kamehameha Hwy., Kahuku, 13000352

IDAHO

Payette County

St. John's Church, 350 N. 4th St., Payette, 13000353

NEW JERSEY

Essex County

Pleasant Days, 274 Old Short Hills Rd., Millburn, 13000354

Mercer County

Trenton Ferry Historic District, Roughly bounded by S. Broad & Federal Sts., Delaware R. & Amtrak NW. Corridor, Trenton, 13000355

NEW YORK

Herkimer County

Brace Farm, 428 Brace Rd., Meetinghouse Green, 13000356

Meetinghouse Green Road Cemetery, Cross & Meeting House Rds., Meetinghouse Green, 13000357

Niagara County

Herschell—Spillman Motor Company Complex, The, 184 Sweeney St., North Tonawanda, 13000358

Oneida County

Rome Elks Lodge No. 96, 126 W. Liberty St., Rome, 13000359

Rensselaer County

Auclair—Button Farmstead (Farmsteads of Pittstown, New York MPS), 80 Auclair Way, Melrose, 13000360

Cartin—Snyder—Overacker Farmstead (Farmsteads of Pittstown, New York MPS), 559 Cushman Rd., Melrose, 13000361

Rockland County

Rockland Print Works, 55 W. Railroad Ave., Garnerville, 13000362

NORTH DAKOTA

McKenzie County

32MZ1184 (Native American Occupation and Utilization of the Little Missouri River Grasslands MPS), Address Restricted, Grassy Butte, 13000347

VIRGINIA

Loudoun County

Arcola Elementary School, 24244 Gum Spring Rd., Sterling, 13000363

Winchester Independent city

Hawthorne and Old Town Spring, 610 & 730 Amherst St., Winchester (Independent City), 13000364

[FR Doc. 2013–11725 Filed 5–16–13; 8:45 am]

BILLING CODE 4312–51–P

INTERNATIONAL TRADE COMMISSION

[Docket No 2954]

Certain Digital Media Devices, Including Televisions, Blu-Ray Disc Players, Home Theater Systems, Tablets and Mobile Phones, Components Thereof and Associated Software: Notice of Receipt of Complaint; Solicitation of Comments Relating to the Public Interest

AGENCY: U.S. International Trade Commission.

ACTION: Notice.

SUMMARY: Notice is hereby given that the U.S. International Trade Commission has received a complaint entitled *Certain Digital Media Devices, Including Televisions, Blu-Ray Disc Players, Home Theater Systems, Tablets and Mobile Phones, Components Thereof and Associated Software,* DN 2954; the Commission is soliciting comments on any public interest issues raised by the complaint or complainant's filing under section 210.8(b) of the Commission's Rules of Practice and Procedure (19 CFR 210.8(b)).

FOR FURTHER INFORMATION CONTACT: Lisa R. Barton, Acting Secretary to the Commission, U.S. International Trade Commission, 500 E Street SW., Washington, DC 20436, telephone (202) 205–2000. The public version of the complaint can be accessed on the Commission's Electronic Document Information System (EDIS) at *EDIS* [1], and will be available for inspection during official business hours (8:45 a.m. to 5:15 p.m.) in the Office of the Secretary, U.S. International Trade Commission, 500 E Street SW., Washington, DC 20436, telephone (202) 205–2000.

General information concerning the Commission may also be obtained by accessing its Internet server at United States International Trade Commission (USITC) at *USITC* [2]. The public record for this investigation may be viewed on the Commission's Electronic Document Information System (EDIS) at *EDIS* [3]. Hearing-impaired persons are advised that information on this matter can be obtained by contacting the Commission's TDD terminal on (202) 205–1810.

SUPPLEMENTARY INFORMATION: The Commission has received a complaint and a submission pursuant to section 210.8(b) of the Commission's Rules of Practice and Procedure filed on behalf of Black Hills Media, LLC on May 13, 2013. The complaint alleges violations of section 337 of the Tariff Act of 1930 (19 U.S.C. 1337) in the importation into the United States, the sale for importation, and the sale within the United States after importation of certain digital media devices, including televisions, blu-ray disc players, home theater systems, tablets and mobile phones, components thereof and associated software. The complaint names as respondents Samsung Electronics Co. Ltd. of South Korea; Samsung Electronics America, Inc of NJ; Samsung Telecommunications America, LLC of TX; LG Electronics, Inc. of South Korea; LG Electronics U.S.A., Inc. of NJ; LG Electronics MobileComm U.S.A., Inc. of CA; Panasonic Corporation of Japan; Panasonic Corporation of North America of NJ; Toshiba Corporation of Japan; Toshiba America Information Systems, Inc. of CA; Sharp Corporation of Japan; Sharp Electronics Corporation of NJ.

Proposed respondents, other interested parties, and members of the public are invited to file comments, not to exceed five (5) pages in length, inclusive of attachments, on any public interest issues raised by the complaint or section 210.8(b) filing. Comments should address whether issuance of the relief specifically requested by the complainant in this investigation would affect the public health and welfare in the United States, competitive conditions in the United States economy, the production of like or directly competitive articles in the United States, or United States consumers.

In particular, the Commission is interested in comments that:

(i) Explain how the articles potentially subject to the requested remedial orders are used in the United States;

(ii) Identify any public health, safety, or welfare concerns in the United States relating to the requested remedial orders;

(iii) Identify like or directly competitive articles that complainant, its licensees, or third parties make in the United States which could replace the subject articles if they were to be excluded;

(iv) Indicate whether complainant, complainant's licensees, and/or third party suppliers have the capacity to replace the volume of articles potentially subject to the requested exclusion order and/or a cease and desist order within a commercially reasonable time; and

(v) Explain how the requested remedial orders would impact United States consumers.

Written submissions must be filed no later than by close of business, eight calendar days after the date of publication of this notice in the **Federal Register**. There will be further opportunities for comment on the public interest after the issuance of any final initial determination in this investigation.

Persons filing written submissions must file the original document electronically on or before the deadlines stated above and submit 8 true paper copies to the Office of the Secretary by noon the next day pursuant to section 210.4(f) of the Commission's Rules of Practice and Procedure (19 CFR 210.4(f)). Submissions should refer to the docket number (''Docket No. 2954'') in a prominent place on the cover page and/or the first page. (*See* Handbook for Electronic Filing Procedures, Electronic

[1] Electronic Document Information System (EDIS): *http://edis.usitc.gov.*

[2] United States International Trade Commission (USITC): *http://edis.usitc.gov.*

[3] Electronic Document Information System (EDIS): *http://edis.usitc.gov.*

Filing Procedures [4]). Persons with questions regarding filing should contact the Secretary (202–205–2000).

Any person desiring to submit a document to the Commission in confidence must request confidential treatment. All such requests should be directed to the Secretary to the Commission and must include a full statement of the reasons why the Commission should grant such treatment. *See* 19 CFR 201.6. Documents for which confidential treatment by the Commission is properly sought will be treated accordingly. All nonconfidential written submissions will be available for public inspection at the Office of the Secretary and on *EDIS* [5].

This action is taken under the authority of section 337 of the Tariff Act of 1930, as amended (19 U.S.C. 1337), and of sections 201.10 and 210.8(c) of the Commission's Rules of Practice and Procedure (19 CFR 201.10, 210.8(c)).

By order of the Commission.

Issued: May 14, 2013.

Lisa R. Barton,

Acting Secretary to the Commission.

[FR Doc. 2013–11814 Filed 5–16–13; 8:45 am]

BILLING CODE 7020–02–P

[4] Handbook for Electronic Filing Procedures: *http://www.usitc.gov/secretary/fed_reg_notices/rules/handbook_on_electronic_filing.pdf.*

[5] Electronic Document Information System (EDIS): *http://edis.usitc.gov.*

INTERNATIONAL TRADE COMMISSION

Certain Digital Models, Digital Data, and Treatment Plans for Use, in Making Incremental Dental Positioning Adjustment Appliances Made Therefrom, and Methods of Making the Same Investigation No. 337–TA–833; Notice of Request for Statements on the Public Interest

AGENCY: U.S. International Trade Commission.

ACTION: Notice.

SUMMARY: Notice is hereby given that the presiding administrative law judge has issued a Final Initial Determination and Recommended Determination on Remedy and Bonding in the above-captioned investigation. The Commission is soliciting comments on public interest issues raised by the recommended relief, specifically the issuance of cease and desist orders. This notice is soliciting public interest comments from the public only. Parties are to file public interest submissions pursuant to 19 CFR 210.50(a)(4).

FOR FURTHER INFORMATION CONTACT: James A. Worth, Office of the General Counsel, U.S. International Trade Commission, 500 E Street SW., Washington, DC 20436, telephone (202) 205–3065. The public version of the complaint can be accessed on the Commission's electronic docket (EDIS) at *http://edis.usitc.gov,* and will be available for inspection during official business hours (8:45 a.m. to 5:15 p.m.) in the Office of the Secretary, U.S. International Trade Commission, 500 E Street SW., Washington, DC 20436, telephone (202) 205–2000.

General information concerning the Commission may also be obtained by accessing its Internet server (*http://www.usitc.gov*). The public record for this investigation may be viewed on the Commission's electronic docket (EDIS) at *http://edis.usitc.gov.* Hearing-impaired persons are advised that information on this matter can be obtained by contacting the Commission's TDD terminal on (202) 205–1810.

SUPPLEMENTARY INFORMATION: Section 337 of the Tariff Act of 1930 provides that if the Commission finds a violation it shall issue a remedial order:

> unless, after considering the effect of such exclusion upon the public health and welfare, competitive conditions in the United States economy, the production of like or directly competitive articles in the United States, and United States consumers, it finds that such articles should not be excluded from entry.

19 U.S.C. 1337(d)(1); *see also* 19 U.S.C. 1337(f)(1).

The Commission is interested in further development of the record on the public interest in these investigations. Accordingly, members of the public are invited to file submissions of no more than five (5) pages, inclusive of attachments, concerning the public interest in light of the administrative law judge's Recommended Determination on Remedy and Bonding issued in this investigation on May 6, 2013. Comments should address whether issuance of cease and desist orders in this investigation would affect the public health and welfare in the United States, competitive conditions in the United States economy, the production of like or directly competitive articles in the United States, or United States consumers.

In particular, the Commission is interested in comments that:

(i) explain how the articles potentially subject to the recommended orders are used in the United States;

(ii) identify any public health, safety, or welfare concerns in the United States relating to the recommended orders;

(iii) identify like or directly competitive articles that complainant, its licensees, or third parties make in the United States which could replace the subject articles if they were to be excluded;

(iv) indicate whether complainant, complainant's licensees, and/or third party suppliers have the capacity to replace the volume of articles potentially subject to the recommended exclusion order and/or a cease and desist order within a commercially reasonable time; and

(v) explain how the cease and desist orders would impact consumers in the United States.

Written submissions must be filed no later than by close of business on June 13, 2013.

Persons filing written submissions must file the original document electronically on or before the deadlines stated above and submit 8 true paper copies to the Office of the Secretary by noon the next day pursuant to section 210.4(f) of the Commission's Rules of Practice and Procedure (19 CFR 210.4(f)). Submissions should refer to the investigation number (''Inv. No. 337–TA–833'') in a prominent place on the cover page and/or the first page. (*See* Handbook for Electronic Filing Procedures, *http://www.usitc.gov/secretary/fed_reg_notices/rules/handbook_on_electronic_filing.pdf*). Persons with questions regarding filing should contact the Secretary (202–205–2000).

Any person desiring to submit a document to the Commission in confidence must request confidential treatment. All such requests should be directed to the Secretary to the Commission and must include a full statement of the reasons why the Commission should grant such treatment. *See* 19 CFR 201.6. Documents for which confidential treatment by the Commission is properly sought will be treated accordingly. A redacted non-confidential version of the document must also be filed simultaneously with the any confidential filing. All non-confidential written submissions will be available for public inspection at the Office of the Secretary and on EDIS.

This action is taken under the authority of section 337 of the Tariff Act of 1930, as amended (19 U.S.C. 1337), and of sections 201.10 and 210.50 of the Commission's Rules of Practice and Procedure (19 CFR 201.10, 210.50).

Issued: May 13, 2013.

By order of the Commission.

Lisa R. Barton,

Acting Secretary to the Commission.

[FR Doc. 2013–11817 Filed 5–16–13; 8:45 am]

BILLING CODE 7020–02–P

NATIONAL FOUNDATION ON THE ARTS AND THE HUMANITIES

National Endowment for the Arts

Submission for OMB Review; Comment Request

The National Endowment for the Arts (NEA) has submitted a public information collection request (ICR) to the Office of Management and Budget (OMB) for review and approval in accordance with the Paperwork Reduction Act of 1995: *Clearance Request for NEA ArtBeat Survey.* Copies of this ICR, with applicable supporting documentation, may be obtained by visiting *www.Reginfo.gov*.

Comments should be sent to the Office of Information and Regulatory Affairs, Attn: OMB Desk Officer for the National Endowment for the Arts, Office of Management and Budget, Room 10235, Washington, DC 20503 202/395–7316, within 30 days from the date of this publication in the **Federal Register**.

The Office of Management and Budget (OMB) is particularly interested in comments which:

- Evaluate whether the proposed collection of information is necessary for the proper performance of the functions of the agency, including whether the information will have practical utility;
- Evaluate the accuracy of the agency's estimate of the burden of the proposed collection of information including the validity of the methodology and assumptions used;
- Enhance the quality, utility, and clarity of the information to be collected; and
- Could help minimize the burden of the collection of information on those who are to respond, including through the use of electronic submission of responses through Grants.gov.

SUPPLEMENTARY INFORMATION: The ArtBeat Questionnaire is available upon request from *survey@arts.gov*

Agency: National Endowment for the Arts.

Title: Clearance Request for NEA ArtBeat Survey.

OMB Number: 3135–XXXX.

Frequency: Annually, FY14–FY16.

Affected Public: Nonprofit organizations and individuals.

Estimated Number of Respondents: 503,532.

Estimated Time per Respondent: 5 min.

Total Burden Hours: 41,961.

Total Annualized Capital/Startup Costs: 0.

Total Annual Costs (Operating/Maintaining Systems or Purchasing Services): 0.

Description: Under the National Endowment for the Arts' Strategic Plan, a critical NEA goal is to *Engage the Public with Diverse and Excellent Art.* To help monitor progress in achieving this goal, the NEA plans to conduct the ArtBeat information collection. Results from the collection will enable the Agency to measure the percentage of audience members at various kinds of NEA-sponsored arts events (exhibits, performances, and film screenings) who report being affected by those events. Also relevant to NEA decision-makers, the data will allow the NEA to gauge how such responses vary by different types of events and audience groups.

Dated: May 13, 2014.

Kathy Plowitz-Worden,

Panel Coordinator, National Endowment for the Arts.

[FR Doc. 2013–11801 Filed 5–16–13; 8:45 am]

BILLING CODE 7537–01–P

NUCLEAR REGULATORY COMMISSION

[NRC–2013–0096; Docket Nos. 50–295 and 50–304; License Nos. DPR–39 and DPR–48]

In the Matter of Zion Solutions, LLC; Zion Nuclear Power Station, Units 1 and 2; Order Approving Indirect Transfer of Control of Facility Operating Licenses

I.

ZionSolutions, LLC (ZS) is the licensee and owner of the Zion Nuclear Power Station, Units 1 and 2 (ZNPS) in Zion, Illinois.

II.

By letter dated January 10, 2013, ZS submitted an application requesting that the U.S. Nuclear Regulatory Commission (NRC) consent to the indirect transfer of control of Facility Operating License Nos. DPR–39 and DPR–48 for the Zion Nuclear Power Station, Units 1 and 2 held by ZS, including the General License for the Zion Independent Spent Fuel Storage Installation (ISFSI).

The transfer will occur as a result of a proposed transaction whereby the current ultimate parent holding company of ZS, Energy*Solutions,* Inc. (ES, Inc.), would be directly acquired by Rockwell Holdco, Inc. (Rockwell), a Delaware corporation that was formed for the purpose of acquiring ES, Inc. and is held by certain investment fund entities organized by controlled affiliates of Energy Capital Partners II, LLC (ECP II). No physical changes to the ZNPS are being proposed.

Approval of the indirect transfer of the licenses was requested pursuant to Section 184 of the Atomic Energy Act of 1954, as amended (AEA) (42 U.S.C. 2234) and Section 50.80 of Title 10 of the *Code of Federal Regulations* (10 CFR). A notice of the request for approval and opportunity for a hearing or to submit written comments was published in the **Federal Register** on February 20, 2013 (78 FR 11904). No requests for a hearing were received in response to this notice. Two comments were received in response to this notice.

Pursuant to Section 184 of the AEA, no license granted under the AEA, and pursuant to 10 CFR 50.80, no license granted under 10 CFR Part 50, shall be transferred, assigned, or in any manner disposed of, directly or indirectly, through transfer of control of any license to any person unless the Commission, finds that the proposed transferee is qualified to be the holder of the license and that the transfer is in accordance with the provisions of law, regulations, and orders issued by the Commission, and gives its consent in writing.

Upon review of the information received from ZS, and other information before the Commission, and relying upon the representations and agreements contained in the Transfer Application, the NRC staff finds that: (1) the qualifications of ZS regarding the proposed indirect transfer of control of ZNPS are not changed, and (2) the proposed indirect transfer of the licenses due to the purchase of the current ultimate parent holding company of ZS, Energy*Solutions,* Inc., which would be directly acquired by Rockwell Holdco, Inc. is otherwise consistent with applicable provisions of laws, regulations and orders issued by the Commission pursuant thereto.

The findings set forth above are supported by a Safety Evaluation (SE) dated May 8, 2013.

The commenters opined that the transfer would disadvantage financial stakeholders. As stated in the supporting SE., the staff reviewed the proposed transfer and found no financial issues with the proposal. In addition, the proposed transfer in no way affects the current financial reporting requirements or the NRC annual review of those reports. Based on the review the staff finds no

disadvantage to financial stakeholder by the proposed transfer.

III.

Accordingly, pursuant to Section 184 of the AEA Act of 1954, as amended and Section 50.80 of 10 CFR, *it is hereby ordered* that the indirect transfer of control of ZNPS, as described herein, is approved.

It is further ordered that after receipt of all required regulatory approvals of the proposed indirect transfer, ZS shall inform the Director of the Office of Federal and State Materials and Environmental Management Programs, in writing, of such receipt no later than one (1) business day prior to the closing of the proposed indirect transfer. Should the proposed indirect transfer not be completed within 60 days from the date of issuance of this Order, the Order shall become null and void; however, on written application and for good cause shown, such date may be extended by order.

This Order is effective upon issuance.

For further details with respect to this Order, see the application dated January 10, 2013 (which can be found at Agencywide Documents Access and Management System [ADAMS] Accession Number ML13014A007). Publicly-Available records will be accessible electronically from the ADAMS Public Electronic Reading Room on the Internet at the NRC Web site *http://www.nrc.gov/reading-rm/adams.html*. Persons who do not have access to ADAMS or who encounter problems in accessing the documents located in ADAMS should contact the NRC PDR Reference staff by telephone at 1–800–397–4209, or 301–415–4737 or by email to *pdr@nrc.gov*.

Dated at Rockville, Maryland, this 8th day of May 2013.

For the Nuclear Regulatory Commission.

Mark A. Satorius,

Director, Office of Federal and State Materials, and Environmental Management Programs.

[FR Doc. 2013–11833 Filed 5–16–13; 8:45 am]

BILLING CODE 7590–01–P

NUCLEAR REGULATORY COMMISSION

Advisory Committee on Reactor Safeguards (ACRS) Meeting of the ACRS Subcommittee on Materials, Metallurgy & Reactor Fuels; Notice of Meeting

The ACRS Subcommittee on Materials, Metallurgy & Reactor Fuels will hold a meeting on May 22, 2013, Room T–2B1, 11545 Rockville Pike, Rockville, Maryland.

The entire meeting will be open to public attendance.

The agenda for the subject meeting shall be as follows:

Wednesday, May 22, 2013—1:00 p.m. Until 3:00 p.m.

The Subcommittee will review and discuss the use of demonstration program as confirmation of integrity for continued storage of high burnup fuel beyond 20 years. The Subcommittee will hear presentations by and hold discussions with the NRC staff and other interested persons regarding this matter. The Subcommittee will gather information, analyze relevant issues and facts, and formulate proposed positions and actions, as appropriate, for deliberation by the Full Committee.

Members of the public desiring to provide oral statements and/or written comments should notify the Designated Federal Official (DFO), Christopher Brown (Telephone 301–415–7111 or Email: *Christopher.Brown@nrc.gov*) five days prior to the meeting, if possible, so that appropriate arrangements can be made. Thirty-five hard copies of each presentation or handout should be provided to the DFO thirty minutes before the meeting. In addition, one electronic copy of each presentation should be emailed to the DFO one day before the meeting. If an electronic copy cannot be provided within this timeframe, presenters should provide the DFO with a CD containing each presentation at least thirty minutes before the meeting. Electronic recordings will be permitted only during those portions of the meeting that are open to the public. Detailed procedures for the conduct of and participation in ACRS meetings were published in the **Federal Register** on October 18, 2012, (77 FR 64146–64147).

Detailed meeting agendas and meeting transcripts are available on the NRC Web site at *http://www.nrc.gov/reading-rm/doc-collections/acrs*. Information regarding topics to be discussed, changes to the agenda, whether the meeting has been canceled or rescheduled, and the time allotted to present oral statements can be obtained from the Web site cited above or by contacting the identified DFO. Moreover, in view of the possibility that the schedule for ACRS meetings may be adjusted by the Chairman as necessary to facilitate the conduct of the meeting, persons planning to attend should check with these references if such rescheduling would result in a major inconvenience.

If attending this meeting, please enter through the One White Flint North building, 11555 Rockville Pike, Rockville, MD. After registering with security, please contact Mr. Theron Brown (Telephone 240–888–9835) to be escorted to the meeting room.

Dated: May 13, 2013.

Cayetano Santos,

Chief, Technical Support Branch, Advisory Committee on Reactor Safeguards.

[FR Doc. 2013–11831 Filed 5–16–13; 8:45 am]

BILLING CODE 7590–01–P

NUCLEAR REGULATORY COMMISSION

[NRC–2013–0038]

Electric Power Research Institute; Seismic Evaluation Guidance

AGENCY: Nuclear Regulatory Commission.

ACTION: Endorsement letter; issuance.

SUMMARY: The U.S. Nuclear Regulatory Commission (NRC) is issuing an endorsement letter of Electric Power Research Institute (EPRI) Report, ''Seismic Evaluation Guidance: EPRI Guidance for the Resolution of Fukushima Near-Term Task Force Recommendation 2.1: Seismic,'' Draft Report, hereafter referred to as the EPRI Guidance.

ADDRESSES: You may access information related to this document, which the NRC possesses and is publicly available, by searching on *http://www.regulations.gov* under Docket ID NRC–2013–0038.

- *Federal Rulemaking Web site:* Go to *http://www.regulations.gov* and search for Docket ID NRC–2013–0038. Address questions about NRC dockets to Carol Gallagher; telephone: 301–492–3668; email: *Carol.Gallagher@nrc.gov.*
- *NRC's Agencywide Documents Access and Management System (ADAMS):* You may access publicly-available documents online in the NRC Library at *http://www.nrc.gov/reading-rm/adams.html.* To begin the search, select ''*ADAMS Public Documents''* and then select ''*Begin Web-based ADAMS Search.''* For problems with ADAMS, please contact the NRC's Public Document Room (PDR) reference staff at 1–800–397–4209, 301–415–4737, or by email to *PDR.Resources@nrc.gov.* The NRC staff's endorsement letter of the EPRI Guidance is available under ADAMS Accession No. ML13106A331. The NRC staff's request for information dated March 12, 2012, is available under ADAMS Accession No. ML12053A340.

• *NRC's PDR:* You may examine and purchase copies of public documents at the NRC's PDR, Room O1–F21, One White Flint North, 11555 Rockville Pike, Rockville, Maryland 20852.

FOR FURTHER INFORMATION CONTACT: Ms. Lisa M. Regner, Japan Lessons-Learned Project Directorate, Office of Nuclear Reactor Regulation, U.S. Nuclear Regulatory Commission, Washington, DC 20555–0001; telephone: 301–415–1906; email: *Lisa.Regner@nrc.gov.*

SUPPLEMENTARY INFORMATION:

I. Background Information

This EPRI Guidance provides additional information, to be used in combination with the staff-endorsed Screening Prioritization and Implementation Details (SPID) report,[1] on an acceptable strategy to implement interim actions in accordance with item (6) of the Requested Information in Enclosure 1 ''Recommendation 2.1: Seismic,'' of the NRC staff's request for information (Section 50.54(f) of Title 10 of the *Code of Federal Regulations* (10 CFR), (the 50.54(f) letter)), ''Request for Information Pursuant to 10 CFR 50.54(f) Regarding Recommendations 2.1, 2.3, and 9.3, of the Near-Term Task Force Review of Insights from the Fukushima Dai-ichi Accident,'' dated March 12, 2012. In addition, in its April 9, 2013 letter,[2] the Nuclear Energy Institute (NEI) requested modifications to the schedule established in the staff's 50.54(f) letter. The NRC staff has found the schedule modifications to be acceptable since they account for completion of the EPRI central and eastern United States (CEUS) ground motion model (GMM) update, completion of potential interim actions provided in the EPRI Guidance, and limited available seismic resources.

The NRC issued the 50.54(f) letter following letter dated March 12, 2012, regarding Recommendations 2.1, 2.3, and 9.3, of the Near-Term Task Force (NTTF) Review of Insights from the Fukushima Dai-ichi Accident.[3] The NRC issued the 50.54(f) letter following the staff's evaluation of the earthquake and tsunami, and resulting nuclear accident, at the Fukushima Dai-ichi nuclear power plant in March 2011. Enclosure 1 to the 50.54(f) letter requests licensees and holders of construction permits under 10 CFR Part 50, ''Domestic Licensing of Production and Utilization Facilities,'' to reevaluate the seismic hazards at their sites using present-day NRC requirements and guidance, and to identify actions taken or planned to address plant-specific vulnerabilities associated with the updated seismic hazards. Based on this information, the NRC staff will determine if additional regulatory actions are necessary to protect against the updated hazards.

By letter dated February 15, 2013, the NRC staff issued an endorsement letter, with clarifications, of EPRI–1025287, ''Seismic Evaluation Guidance: Screening, Prioritization, and Implementation Details (SPID) for the Resolution of Fukushima Near-Term Task Force Recommendation 2.1: Seismic,'' referred to as the SPID report. This SPID report describes strategies for the screening, prioritization, and implementation of seismic risk evaluations that are acceptable to the NRC staff, and will assist nuclear power reactor licensees when responding to Enclosure 1 of the 50.54(f) letter.

By letter dated April 9, 2013, the NEI submitted additional guidance to be used to supplement the SPID report for NRC endorsement. The letter also documented the industry's proposed plan to update the GMM for CEUS plants, and proposed modifications to the schedule for plant seismic reevaluations established in the 50.54(f) letter. The NEI letter, the EPRI Guidance, and additional attachments addressing proposed schedule changes are available in ADAMS under package Accession No. ML13101A345.

II. Ground Motion Model

The 50.54(f) letter requested that the licensees whose plants are located in the CEUS use NUREG–2115, ''Central and Eastern United States [CEUS] Seismic Source Characterization for Nuclear Facilities'' and the appropriate EPRI (2004, 2006) GMM to characterize the seismic hazard for their sites. The industry is currently completing a study to update the EPRI (2004, 2006) GMM based on current data and new ground motion prediction equations developed by seismic experts.

The NRC staff has interacted with NEI, EPRI, and other stakeholders in public meetings since November 2012, for status updates on industry's efforts to update the CEUS GMM. By letter dated January 31, 2013, the NEI transmitted the EPRI draft document, ''Draft—EPRI (2004, 2006) Ground Motion Model (GMM) Review Project'' to the NRC, requesting review and approval by February 27, 2013. For the update of its earlier GMM, EPRI used a significant amount of additional data, conducted field investigations, and used more recent methods than were previously available. In performing the GMM update, EPRI has also addressed the concerns of an independent peer review panel, which is an important part of the Senior Seismic Hazard Analysis Committee (SSHAC) guidelines (these guidelines are discussed in NRC's NUREG 2117, ''Practical Implementation Guidelines for SSHAC Level 3 and 4 Hazard Studies''). Following a review of the NEI submittal, in a public meeting on February 28, 2013, the staff expressed concern with EPRI's treatment of uncertainty and the level of documentation in the proposed updated GMM. The staff formally documented these concerns by letter dated March 20, 2013.

Subsequently, in a public meeting on March 26, 2013, industry presented a revision of its updated EPRI GMM, which demonstrated significant progress toward addressing the staff's concerns with respect to the treatment of uncertainty. Industry also proposed a schedule, including further interactions with NRC staff, for completing the development and documentation of the updated EPRI GMM. In order to complete its update of the EPRI GMM and accompanying documentation, and to allow time for the development of site-specific seismic hazard curves, industry proposed a 6 month delay from the schedule outlined in the 50.54(f) letter for the submittal of the seismic hazard reevaluations for CEUS plants.

The staff agrees that updated models, methods, and data will provide licensees with the most current information in order to perform the seismic hazard evaluations requested by the 50.54(f) letter.

III. EPRI Guidance

The EPRI Guidance document provides licensees with information on the performance of an Expedited Seismic Evaluation Process. The Expedited Seismic Evaluation Process is a screening, evaluation, and equipment modification process to be conducted by licensees to provide additional seismic margin and expedite plant safety enhancements while more detailed and comprehensive plant seismic risk evaluations are being performed.

The Expedited Seismic Evaluation Process evaluations would be conducted on plants with a new seismic hazard that exceeds their current seismic design basis, and necessary

[1] The SPID report is available in the NRC's Agencywide Documents Access and Management System (ADAMS) under Accession No. ML12333A170. The staff endorsement letter for the SPID report is available in ADAMS under Accession No. ML12319A074.

[2] The NEI letter, with attachments, is available in ADAMS in a package with Accession No. ML13101A345.

[3] The NTTF Report is available under ADAMS Accession No. ML111861807. The 50.54(f) letter is available under ADAMS Accession No. ML12053A340.

modifications would be made to certain core and containment cooling components used during the initial plant coping time following a severe external event. The letter states that CEUS licensees will complete non-outage-related Expedited Seismic Evaluation Process equipment modifications by December 2016. Western United States (WUS) licensees will complete non-outage-related Expedited Seismic Evaluation Process equipment modifications by June 2018.

After review of industry's proposed EPRI Guidance, the NRC staff believes that the evaluations and potential near-term equipment modifications associated with the Expedited Seismic Evaluation Process will provide an important demonstration of seismic margin and enhance plant safety while more detailed plant risk evaluations are being conducted by licensees. The staff further concludes that the seismic evaluation guidance for the EPRI Guidance provides an appropriate methodology for licensees to implement and complete the Expedited Seismic Evaluation Process according to the schedule provided in the letter.

IV. Schedule Modifications

The NEI has proposed two adjustments to the seismic hazard reevaluations at nuclear power plant sites: (1) to complete the update of the EPRI GMM for the CEUS, and (2) to implement the EPRI Guidance. These proposed changes affect the schedule outlined in the 50.54(f) letter.

First, the industry has requested additional time to complete the updated EPRI GMM project, including documentation and interactions with the NRC staff. The project documentation is scheduled to be submitted to the NRC on June 3, 2013. Pending approval by the staff, the CEUS licensees will use the updated model to complete the site-specific seismic hazard reevaluations specified in Enclosure 1 to the SPID guidance. Currently, the hazard submittals are requested by September 2013; however, industry has requested to submit the hazard evaluations by March 31, 2014. The industry stated in its letter that it will not delay submittal of items 3.a. ''Description of Subsurface Materials and Properties,'' and 3.b. ''Development of Base Case Profiles and Nonlinear Material Properties'' of Section 4 of Enclosure 1 to the SPID guidance. Licensees intend to submit these items in September 2013 for the staff's review. This will allow the staff to begin its review in accordance with the original schedule and complete a significant portion of the Section 4 review on time.

The staff finds that the schedule modifications discussed above for CEUS plants are acceptable because the updated GMM will provide the CEUS operating nuclear plant fleet with a model developed using the most recent data and methodologies available for their seismic hazard reevaluations. Additionally, the partial submittal in September 2013 will allow the staff to complete a portion of its CEUS review as originally scheduled by the 50.54(f) letter.

Second, the industry has requested modifications to the 50.54(f) letter schedule to allow for implementation of the EPRI Guidance interim actions for those nuclear power plants where the reevaluated seismic hazard exceeds the plant's design basis. These schedule modifications allow for completion of Expedited Seismic Evaluation Process for CEUS plants by December 2016, if the modifications do not require a plant shutdown to access equipment. For WUS plants, the Expedited Seismic Evaluation Process modifications will be completed by June 2018, if the modifications do not require a plant shutdown to access equipment.

For plants requiring a seismic risk analysis (i.e., those with a reevaluated seismic hazard that exceeds the current seismic design basis), the 50.54(f) letter states that the staff will perform a prioritization for both the CEUS and WUS plants into two priority groups, and possibly a third, if needed. Under industry's proposed schedule, the higher priority CEUS plants will complete their risk evaluations by June 2017 (originally scheduled for October 2016). This delay is primarily due to the additional time needed to complete the EPRI GMM update project. The second group of CEUS plants will complete their risk evaluations by December 2019. This is about a two-year delay from the schedule specified in the 50.54(f) letter for the lower priority plants to complete their risk evaluations. Conversely, the letter proposes an earlier completion date of June 2017 for the risk evaluations for the higher priority WUS plants.

The staff finds that the schedule modifications discussed above for CEUS and WUS nuclear power plants are acceptable, since the Expedited Seismic Evaluation Process provides for near-term seismic evaluations and expedited equipment modifications at the plants that will offer additional assurance that plants will operate safely during a beyond design basis seismic event. Furthermore, the schedule modifications account for limited seismic resources available to both the NRC and the industry. The schedule modifications provide for completion of the higher priority CEUS plant risk evaluations by the end of June 2017, which is not a significant extension of the original 50.54(f) letter schedule of October 2016. In addition, the schedule proposes an earlier completion date for the higher priority risk evaluations for the WUS plants.

V. Basis for Endorsement

The NRC staff interacted with the stakeholders on development of the EPRI Guidance report with a focus on guidance on potential interim actions to be implemented for plants where the reevaluated seismic hazard exceeds the current seismic design basis. The EPRI Guidance report is the product of considerable interaction between the NRC, NEI, EPRI, and other stakeholders at five public meetings [4] over a 5-month period. These interactions and the insights gained from the meetings allowed for the development of this document in a very short time frame. The meetings helped develop the expectations for how licensees would perform potential interim actions after updating their seismic hazard information. At each meeting, the NRC staff provided its comments on the current version of the EPRI Guidance and discussed with stakeholders subsequent proposed revisions to the document. This iterative process, over several months, resulted in the final version of the document. The NRC staff's endorsement of the EPRI Guidance is based on this cumulative development process resulting from the interactions between stakeholders and the NRC staff. This is the same process employed successfully in the development of the SPID guidance.

The staff has determined that the EPRI Guidance will provide an important demonstration of seismic margin and enhanced plant safety through evaluations and potential near-term modifications of certain core and containment cooling equipment while more comprehensive plant seismic risk evaluations are being performed. The NRC staff also has determined that the schedule modifications provided in the NEI's April 9, 2013, letter are acceptable because the schedule accounts for seismic resource limitations, EPRI's completion of the update to the GMM for the CEUS, and implementation of the EPRI Guidance evaluations and actions.

[4] Public meetings were held on November 2 and 14 and December 13, 2012; and February 14 and March 26, 2013.

VI. Backfitting and Issue Finality

This endorsement letter does not constitute backfitting as defined in 10 CFR 50.109, ''Backfitting'' (the Backfit Rule). This endorsement letter provides additional guidance on an acceptable method for implementing the interim actions described in item (6) of the Requested Information in Enclosure 1, ''Recommendation 2.1: Seismic,'' of the 50.54(f) letter. Licensees and construction permit holders may voluntarily use the guidance in the EPRI Guidance to comply with the requested interim action portion of the 50.54(f) letter. Methods, analyses, or solutions that differ from those described in the EPRI Guidance report may be deemed acceptable if they provide sufficient basis and information for the NRC staff to verify that the proposed alternative is acceptable.

VII. Congressional Review Act

This endorsement letter is a rule as designated in the Congressional Review Act (5 U.S.C. 801–808). The Office of Management and Budget has found that this is a major rule in accordance with the Congressional Review Act.

Dated at Rockville, Maryland, this 7th day of May 2013.

For the Nuclear Regulatory Commission.

Eric J. Leeds,

Director, Office of Nuclear Reactor Regulation.

[FR Doc. 2013–11847 Filed 5–16–13; 8:45 am]

BILLING CODE 7590–01–P

SECURITIES AND EXCHANGE COMMISSION

Submission for OMB Review; Comment Request

Upon Written Request, Copies Available From: Securities and Exchange Commission, Office of Investor Education and Advocacy, Washington, DC 20549–0213.

Extension:

Rule 19b–4(e) and Form 19b–4(e); SEC File No. 270–447; OMB Control No. 3235–0504.

Notice is hereby given that pursuant to the Paperwork Reduction Act of 1995 (44 U.S.C. 3501 *et seq.*) the Securities and Exchange Commission (''Commission'') has submitted to the Office of Management and Budget (OMB) a request for approval of extension of the previously approved collection of information provided for in Rule 19b–4(e) (17 CFR 240.19b–4(e)) under the Securities Exchange Act of 1934 (15 U.S.C. 78a *et seq.*) (the ''Act'').

Rule 19b–4(e) permits a self-regulatory organization (''SRO'') to list and trade a new derivative securities product without submitting a proposed rule change pursuant to Section 19(b) of the Act (15 U.S.C. 78s(b)), so long as such product meets the criteria of Rule 19b–4(e) under the Act. However, in order for the Commission to maintain an accurate record of all new derivative securities products traded on the SROs, Rule 19b–4(e) requires an SRO to file a summary form, Form 19b–4(e), to notify the Commission when the SRO begins trading a new derivative securities product that is not required to be submitted as a proposed rule change to the Commission. Form 19b–4(e) should be submitted within five business days after an SRO begins trading a new derivative securities product that is not required to be submitted as a proposed rule change. In addition, Rule 19b–4(e) requires an SRO to maintain, on-site, a copy of Form 19b–4(e) for a prescribed period of time.

This collection of information is designed to allow the Commission to maintain an accurate record of all new derivative securities products traded on the SROs that are not deemed to be proposed rule changes and to determine whether an SRO has properly availed itself of the permission granted by Rule 19b–4(e). The Commission reviews SRO compliance with Rule 19b–4(e) through its routine inspections of the SROs.

The respondents to the collection of information are SROs (as defined by the Act), all of which are national securities exchanges. As of March 2013, there are seventeen entities registered as national securities exchanges with the Commission. The Commission receives an average total of 3,879 responses per year, which corresponds to an estimated annual response burden of 3,879 hours. At an average hourly cost of $63, the aggregate related cost of compliance with Rule 19b–4(e) is $244,377 (3,879 burden hours multiplied by $63/hour).

Compliance with Rule 19b–4(e) is mandatory. Information received in response to Rule 19b–4(e) shall not be kept confidential; the information collected is public information. An agency may not conduct or sponsor, and a person is not required to respond to, a collection of information unless it displays a currently valid OMB control number.

The public may view background documentation for this information collection at the following Web site, *www.reginfo.gov.* Comments should be directed to: (i) Desk Officer for the Securities and Exchange Commission, Office of Information and Regulatory Affairs, Office of Management and Budget, Room 10102, New Executive Office Building, Washington, DC 20503, or by sending an email to: *Shagufta_Ahmed@omb.eop.gov;* and (ii) Thomas Bayer, Director/Chief Information Officer, Securities and Exchange Commission, c/o Remi Pavlik-Simon, 6432 General Green Way, Alexandria, VA 22312 or send an email to: *PRA_Mailbox@sec.gov.* Comments must be submitted to OMB within 30 days of this notice.

Dated: May 14, 2013.

Elizabeth M. Murphy,

Secretary.

[FR Doc. 2013–11784 Filed 5–16–13; 8:45 am]

BILLING CODE 8011–01–P

SECURITIES AND EXCHANGE COMMISSION

Sunshine Act Meeting.

Notice is hereby given, pursuant to the provisions of the Government in the Sunshine Act, Public Law 94–409, that the Securities and Exchange Commission will hold a Closed Meeting on Thursday, May 23, 2013 at 2:00 p.m.

Commissioners, Counsel to the Commissioners, the Secretary to the Commission, and recording secretaries will attend the Closed Meeting. Certain staff members who have an interest in the matters also may be present.

The General Counsel of the Commission, or her designee, has certified that, in her opinion, one or more of the exemptions set forth in 5 U.S.C. 552b(c)(3), (5), (7), 9(B) and (10) and 17 CFR 200.402(a)(3), (5), (7), 9(ii) and (10), permit consideration of the scheduled matters at the Closed Meeting.

Commissioner Aguilar, as duty officer, voted to consider the items listed for the Closed Meeting in a closed session.

The subject matter of the Closed Meeting will be:

Institution and settlement of injunctive actions;

Institution and settlement of administrative proceedings; and

Other matters relating to enforcement proceedings.

At times, changes in Commission priorities require alterations in the scheduling of meeting items.

For further information and to ascertain what, if any, matters have been added, deleted or postponed, please contact the Office of the Secretary at (202) 551–5400.

Dated: May 15, 2013.

Elizabeth M. Murphy,

Secretary.

[FR Doc. 2013–11963 Filed 5–15–13; 4:15 pm]

BILLING CODE 8011–01–P

SECURITIES AND EXCHANGE COMMISSION

[Release No. 34–69564; File No. SR–CME–2013–06]

Self-Regulatory Organizations; Chicago Mercantile Exchange Inc.; Notice of Filing and Order Granting Accelerated Approval of Proposed Rule Change Regarding an Expansion of CME Clearing's Category 3 Collateral Limits

May 13, 2013.

Pursuant to Section 19(b)(1) of the Securities Exchange Act of 1934 (''Act''),[1] and Rule 19b–4 thereunder,[2] notice is hereby given that on May 3, 2013, Chicago Mercantile Exchange Inc. (''CME'') filed with the Securities and Exchange Commission (''Commission'') the proposed rule change described in Items I and II, below, which Items have been prepared primarily by CME. The Commission is publishing this notice to solicit comments on the proposed rule change from interested persons and to approve the proposed rule change on an accelerated basis.

I. Self-Regulatory Organization's Statement of the Terms of Substance of the Proposed Rule Change

CME proposes to issue the text copied below via a Clearing Advisory Notice to announce changes relating to the maximum limits for ''Category 3'' collateral (as specified on CME's Web site) effective as of May 10, 2013. This text is also available at CME's Web site at *http://www.cmegroup.com*, at the principal office of CME, and at the Commission's Public Reference Room. The text is:

As per the normal review of acceptable collateral and limits, CME Clearing is making the below change regarding the clearing member firm maximum limit for Category 3 collateral. The change is pending all regulatory review periods.

Collateral accepted by CME Clearing is categorized as noted below. Currently, the maximum allowable limit for utilization of Category 3 Assets is the lesser of a) 40% of core margin requirements and concentration requirements per origin and asset account or b) $3 billion per Clearing Member Firm across all settlement accounts.

Effective with the RTH cycle on Friday, May 10, 2013, the maximum allowable limit for utilization of Category 3 Assets will be the lesser of a) 40% of core margin requirements and concentration requirements per origin and asset account or b) $5 billion per Clearing Member Firm across all settlement accounts.

Category 1 assets have no requirement type limits. Category 2 assets have a maximum allowable limit of 40% of core margin requirements and concentration requirements per Clearing Member Firm across all settlement accounts.

Please refer to the Web site link below for details on individual asset type limits and product class restrictions.

Category 1 Assets:
- U.S. Cash
- U.S. Treasuries
- IEF2 Money Market Fund Program

Category 2 Assets:
- U.S. Government Agencies
- Select Mortgage Backed Securities
- IEF5 Specialized Cash Program
- Letters of Credit

Category 3 Assets:
- Foreign Sovereign Debt (sub-limit of $1 billion per clearing member firm)
- Gold (sub-limit of $500 million per clearing member firm)
- IEF4 Specialized Collateral Program
- Stocks
- TIPS (sub-limit of $1 billion per clearing member firm)

Please call CME Clearing for availability of Foreign Cash deposits.

Please refer to the Web site *http://www.cmegroup.com/clearing/financial-and-collateral-management/* for further detail regarding acceptable collateral, haircuts, and limits. For questions about requirements, please call Risk Management hotline at 312–634–3888 and questions about collateral can be directed to the Financial Unit hotline at 312–207–2594.

* * * * *

II. Self-Regulatory Organizations Statement of the Purpose of, and Statutory Basis for, the Proposed Rule Change

In its filing with the Commission, CME included statements concerning the purpose and basis for the proposed rule change and discussed any comments it received on the proposed rule change. The text of these statements may be examined at the places specified in Item III below. CME has prepared summaries, set forth in sections A, B, and C below, of the most significant aspects of such statements.

A. Self-Regulatory Organization's Statement of the Purpose of, and Statutory Basis for, the Proposed Rule Change

As a derivatives clearing organization (''DCO'') registered with the Commodity Futures Trading Commission (''CFTC''), CME periodically reviews the acceptable collateral and limits associated with its clearing business. The changes announced in the Clearing Notice are part of this normal process. The changes relate to the maximum limit for certain ''Category 3'' collateral as specified on CME's Web site. Currently, the maximum allowable limit for utilization of the Category 3 Assets is the lesser of (a) 40% of core margin requirements and concentration requirements per origin and asset account or (b) $3 billion per Clearing Member Firm across all settlement accounts. The Notice would announce that, effective on Friday, May 10, 2013, the maximum allowable limit for utilization of Category 3 Assets will become the lesser of (a) 40% of core margin requirements and concentration requirements per origin and asset account or (b) $5 billion per Clearing Member Firm across all settlement accounts. The purpose of the change is to increase the flexibility of CME clearing members to post additional Category 3 collateral in anticipation of an increase to the amount of initial margin posted at CME due to the CFTC's impending June 11, 2013 clearing mandate effective date.

Although the changes could impact the makeup of the collateral used by any particular clearing member to meet its margin requirements, the changes would have no impact on the level of margin collected.[3] Further, the changes will have no impact at all on the collection of margin in relation to CME's CDS clearing offering, because the CDS business has separate requirements that apply in particular to posting collateral in connection with CDS activities. The Notice would not change those separate CDS-specific requirements.

CME notes that it has also submitted the proposed rule changes that are the subject of this filing to its primary regulator, the CFTC, in CME Submission 13–155.

CME believes the proposed rule change is consistent with the requirements of the Exchange Act, including Section 17A of the Act.[4] Specifically, CME believes the changes are consistent with Section 17A(b)(3)(F)

[1] 15 U.S.C. 78s(b)(1).

[2] 17 CFR 240.19b–4.

[3] Historically, CME has aligned the size of its committed liquidity facility with the amount of Category 3 assets it was willing to accept as collateral. For example, in 2012 CME's committed liquidity facility was $3 billion and the amount of Category 3 collateral it accepted was also $3 billion. CME increased its committed liquidity facility and obtained a $5 billion liquidity facility for 2013. When CME increased its liquidity facility it did not immediately increase its Category 3 collateral limits in tandem. CME now plans to increase the limits on its acceptance of Category 3 collateral in advance of the Category 2 clearing mandate. Since CME already increased its committed liquidity facility to $5 billion, this change does not impact its overall risk profile.

[4] 15 U.S.C. 78q–1.

of the Act,[5] which requires, among other things, that the rules of a clearing agency be designed to promote the prompt and accurate clearance and settlement of securities transactions and, to the extent applicable, derivative agreements, contracts, and transactions, to assure the safeguarding of securities and funds which are in the custody and control of the clearing agency or for which it is responsible, and to protect investors and the public interest. As a DCO registered with the CFTC, CME believes the proposed Advisory Notice will facilitate posting of collateral in relation to products that are subject to the CFTC's impending clearing mandates and that such changes are in compliance with applicable CFTC requirements related to such matters. In addition, although the changes could impact the makeup of the collateral used by any particular clearing member to meet its margin requirements for CFTC regulated products, the changes would have no impact on the overall level of margin collected. CME believes the Notice is consistent with the requirements of the Act because facilitating posting of collateral in compliance with applicable CFTC regulations promotes the prompt and accurate clearance and settlement of derivative agreements, contracts and transactions and facilitates the protection of investors and the public interest. Furthermore, the proposed Advisory Notice is limited to CME's business as a DCO and therefore does not significantly affect any securities operations of the clearing agency or any related rights or obligations of the clearing agency or persons using such service. For these reasons, CME believes the proposed rule is consistent with the requirements of Section 17A(b)(3)(F) of the Act.[6]

B. Self-Regulatory Organization's Statement on Burden on Competition

CME does not believe that the proposed rule change will have any impact, or impose any burden, on competition.

C. Self-Regulatory Organization's Statement on Comments on the Proposed Rule Change Received from Members, Participants, or Others

CME has not solicited, and does not intend to solicit, comments regarding this proposed rule change. CME has not received any unsolicited written comments from interested parties.

[5] 15 U.S.C. 78q–1(b)(3)(F).

[6] *Id.*

III. Solicitation of Comments

Interested persons are invited to submit written data, views and arguments concerning the foregoing, including whether the proposed rule change is consistent with the Act. Comments may be submitted by any of the following methods:

Electronic Comments

- Use the Commission's Internet comment form (*http://www.sec.gov/rules/sro.shtml*) or
- Send an email to *rule-comments@sec.gov.* Please include File Number SR–CME–2013–06 on the subject line.

Paper Comments

- Send paper comments in triplicate to Elizabeth M. Murphy, Secretary, Securities and Exchange Commission, 100 F Street NE., Washington, DC 20549–1090.

All submissions should refer to File Number SR–CME–2013–06. This file number should be included on the subject line if email is used. To help the Commission process and review your comments more efficiently, please use only one method. The Commission will post all comments on the Commission's Internet Web site (*http://www.sec.gov/rules/sro.shtml*). Copies of the submission, all subsequent amendments, all written statements with respect to the proposed rule change that are filed with the Commission, and all written communications relating to the proposed rule change between the Commission and any person, other than those that may be withheld from the public in accordance with the provisions of 5 U.S.C. 552, will be available for Web site viewing and printing in the Commission's Public Reference Room, 100 F Street NE., Washington, DC 20549, on official business days between the hours of 10:00 a.m. and 3:00 p.m. Copies of such filing also will be available for inspection and copying at the principal office of CME and on CME's Web site at *http://www.cmegroup.com/market-regulation/files/sec_19b-4_13-06.pdf.*

All comments received will be posted without change; the Commission does not edit personal identifying information from submissions. You should submit only information that you wish to make available publicly. All submissions should refer to File Number SR–CME–2013–06 and should be submitted on or before June 7, 2013.

IV. Commission's Findings and Order Granting Accelerated Approval of Proposed Rule Change

Section 19(b) of the Act[7] directs the Commission to approve a proposed rule change of a self-regulatory organization if it finds that such proposed rule change is consistent with the requirements of the Act and the rules and regulations thereunder applicable to such organization. The Commission finds that the proposed rule change is consistent with the requirements of the Act, in particular the requirements of Section 17A of the Act,[8] and the rules and regulations thereunder applicable to CME. Specifically, the Commission finds that the proposed rule change is consistent with Section 17A(b)(3)(F) of the Act,[9] which requires, among other things, that the rules of a registered clearing agency be designed to promote the prompt and accurate clearance and settlement of securities transactions and, to the extent applicable, derivative agreements, contracts, and transactions because it will facilitate the posting of collateral in relation to products that are subject to the CFTC's impending clearing mandates.

In its filing, CME requested that the Commission approve this proposed rule change on an accelerated basis for good cause shown. CME notes that the products affected by this filing, and the CME's operations as a DCO clearing such products, are regulated by the CFTC under the Commodity Exchange Act and are therefore limited to CME's business as a DCO and do not significantly affect any securities clearing operations of CME or any related rights or obligations of the clearing agency or persons using such service. CME believes the Advisory Notice simply increases the flexibility afforded to CME in executing its responsibilities as a DCO and does not have any negative impact on its overall risk profile. Additionally, CME has indicated that not approving this request on an accelerated basis would have a significant impact on the clearing business of CME as a DCO.

The Commission finds that there is good cause, pursuant to Section 19(b)(2) of the Act,[10] for approving the proposed rule change prior to the thirtieth day after the date of publication of notice in the **Federal Register** because: (i) The proposed rule change does not

[7] 15 U.S.C. 78s(b).

[8] 15 U.S.C. 78q–1. In approving this proposed rule change, the Commission has considered the proposed rule's impact on efficiency, competition, and capital formation. 15 U.S.C. 78c(f).

[9] 15 U.S.C. 78q–1(b)(3)(F).

[10] 15 U.S.C. 78s(b)(2).

significantly affect any of CME's securities clearing operations or any related rights or obligations of CME or persons using such service; (ii) the products affected by this filing, and the CME's operations as a DCO clearing such products, are regulated by the CFTC under the Commodity Exchange Act; and (iii) CME has indicated that not providing accelerated approval would have a significant impact on its swaps clearing business as a designated clearing organization.

V. Conclusion

It is therefore ordered, pursuant to Section 19(b)(2) of the Act,[11] that the proposed rule change (SR–CME–2013–06) be, and hereby is, approved on an accelerated basis.

For the Commission, by the Division of Trading and Markets, pursuant to delegated authority.[12]

Kevin M. O'Neill,

Deputy Secretary.

[FR Doc. 2013–11760 Filed 5–16–13; 8:45 am]

BILLING CODE 8011–01–P

[11] *Id.*

[12] 17 CFR 200.30–3(a)(12).

SECURITIES AND EXCHANGE COMMISSION

[Release No. 34–69565; File No. SR–NYSE–2013–33]

Self-Regulatory Organizations; New York Stock Exchange LLC; Notice of Filing of Proposed Rule Change Proposing To: (i) Delete the Sections in the Listed Company Manual (the ''Manual'') Containing the Listing Application Materials (Including the Listing Application and the Listing Agreement) and Adopt Updated Listing Application Materials That Will Be Posted on the Exchange's Web Site; and (ii) Adopt as New Rules Certain Provisions That Are Currently Included in the Various Forms of Agreements That Are in the Manual, as Well as Some Additional New Rules That Make Explicit Existing Exchange Policies With Respect to Initial Listings

May 13, 2013.

Pursuant to Section 19(b)(1)[1] of the Securities Exchange Act of 1934 (the ''Act'')[2] and Rule 19b–4 thereunder,[3] notice is hereby given that, on April 30, 2013, New York Stock Exchange LLC (the ''Exchange'' or ''NYSE'') filed with the Securities and Exchange Commission (the ''Commission'') the proposed rule change as described in Items I, II, and III below, which Items have been prepared by the self-regulatory organization. The Commission is publishing this notice to solicit comments on the proposed rule change from interested persons.

[1] 15 U.S.C. 78s(b)(1).

[2] 15 U.S.C. 78a.

[3] 17 CFR 240.19b–4.

I. Self-Regulatory Organization's Statement of the Terms of Substance of the Proposed Rule Change

The Exchange proposes to: (i) Delete the sections in the Listed Company Manual (the ''Manual'') containing the listing application materials (including the listing application and the listing agreement) and adopt updated listing application materials that will be posted on the Exchange's Web site; and (ii) adopt as new rules certain provisions that are currently included in the various forms of agreements that are in the Manual, as well as some additional new rules that make explicit existing Exchange policies with respect to initial listings. The text of the proposed rule change is available on the Exchange's Web site at *www.nyse.com,* at the principal office of the Exchange, and at the Commission's Public Reference Room.

II. Self-Regulatory Organization's Statement of the Purpose of, and Statutory Basis for, the Proposed Rule Change

In its filing with the Commission, the self-regulatory organization included statements concerning the purpose of, and basis for, the proposed rule change and discussed any comments it received on the proposed rule change. The text of those statements may be examined at the places specified in Item IV below. The Exchange has prepared summaries, set forth in sections A, B, and C below, of the most significant parts of such statements.

A. Self-Regulatory Organization's Statement of the Purpose of, and the Statutory Basis for, the Proposed Rule Change

1. Purpose

The Exchange proposes to: (i) delete the forms of documents required in connection with a listing from the Manual and eliminate requirements from those documents that are redundant or that no longer serve any regulatory purpose; and (ii) adopt as new rules certain provisions that are currently included in the various forms of agreements that are in the Manual, as well as some additional new rules that make explicit existing Exchange policies with respect to initial listings. In lieu of their inclusion in the Manual, the Exchange proposes to make all of the required documents (including the listing application and the listing agreement) available on its Web site (*www.nyx.com*).[4] In the event that in the future the Exchange makes any substantive changes (including changes to the rights, duties, or obligations of the applicant or the Exchange, or that would otherwise require a rule filing) to those documents being removed from the Manual, it will submit a rule filing to the Securities and Exchange Commission (''SEC'') to obtain approval of such changes.[5] The Exchange will maintain all historical versions of those documents on its Web site after changes have been made, so that it will be possible to review how each document has changed over time.

Part I of the rule filing includes a discussion of the proposed changes to the Manual on a section-by-section basis. Part II sets out the Exchange's proposed approach to each item included in the current forms of listing agreements for domestic companies and Part III sets out the Exchange's proposed approach to each item included in the current forms of listing agreements for foreign private issuers. Part IV sets forth the Exchange's proposed approach to each requirement in the current form of the original listing application. Finally, Part V sets forth the Exchange's proposed approach to the requirements in the forms of transfer agent and registrar agreements.

I. Proposed Changes to the Manual by Section

The following is a discussion of the changes being made to the Manual on a section-by-section basis:[6]

[4] The forms of all of the documents required in connection with a listing application as they will appear on the Exchange's Web site are included in Exhibit 3 to this filing. The Commission notes that Exhibit 3 is attached to the filing, not to this Notice. It has been a long-standing practice of the Exchange to post on its Web site the forms of the documents required to be submitted in connection with applications to list. After approval of this proposal the Exchange will continue that practice as before, but the forms of those documents will no longer be set forth in the Manual.

[5] The Exchange will not submit a rule filing if the changes made to a document are typographical or stylistic in nature.

[6] All rule references in this filing are to sections of the Manual unless otherwise specified. In addition to the changes discussed herein, the Exchange proposes to amend the following sections of the Manual to remove cross-references therein to sections that are proposed to be deleted or amended and to state that the required documents are on the Exchange's Web site or available from the Exchange upon request: Sections 102.01C(F) (Minimum Numerical Standards—Domestic Companies—Equity Listings); 103.01B(C) (Minimum Numerical Standards Non-U.S. Companies Equity Listings); 103.04 (Sponsored American Depository Receipts or Shares (''ADRS'')); 204.00(B) (Notice to and Filings

Continued

Amendments to Sections 102.01C and 103.01B

Sections 102.01C and 103.01B permit companies to make certain adjustments to their reported financial information for purposes of complying with the Exchange's initial quantitative listing standards. This adjusted financial data is required to be included as part of the company's listing application. The Exchange proposes to amend each of these sections to remove a cross-reference to the listing application in Section 702.04 and to state that the form of listing application and information regarding supporting documents required in connection with adjustments to historical financial data are available on the Exchange's Web site or from the Exchange upon request.

Amendment to Sections 103.04—Sponsored American Depository Receipts or Shares (''ADRs'')

Section 103.04 contains requirements for companies listing American Depositary Receipts (''ADRs''). The Exchange proposes to delete a cross-reference to the listing agreements in Section 901.00 and to add a statement that the form of listing agreement and information regarding supporting documents required in connection with listing ADRs are available on the Exchange's Web site or from the Exchange upon request.

Addition of Section 104.00—Confidential Review of Eligibility

The Exchange proposes to add a new Section 104.00 to describe the free confidential review of the eligibility for listing undertaken by the Exchange of any company that (i) requests such a review and (ii) provides the documents listed in Section 104.01 (for domestic companies) or Section 104.02 (for non-U.S. companies). A company may submit an original listing application only after it has been cleared to do so by the Exchange after completion of a confidential eligibility review.

Amendment to Section 104.01—Domestic Companies

The Exchange proposes to amend Section 104.01 to delete the requirement to certify the copy of the applicant's charter and by-laws provided in connection with a confidential eligibility review, as the certification is not necessary for such review. The Exchange proposes to modify the provision specifying that it will review specimen bond or stock certificates by inserting the words ''if any'' at the end of the provision, as not all listed securities are certificated and the provision will therefore not always be applicable.[7] In addition, the Exchange proposes to add a statement that the form of listing application and information regarding supporting documents are available on the Exchange's Web site or from the Exchange upon request.

Amendment to Section 104.02—Non-U.S. Companies

The Exchange proposes to amend Section 104.02 to state that an applicant seeking a confidential eligibility review should provide a copy of its charter and by-laws ''or equivalent constitutional documents,'' in recognition of the fact that in a number of countries constitutional documents are not in the form of charters or by-laws. At the same time, the Exchange proposes to delete the requirement that the copy provided be certified, as the certification is not necessary for such review. The Exchange proposes to modify the provision specifying that it will review specimens of certificates traded or to be traded in the U.S. market by inserting the words ''if any'' at the end of the provision, as not all listed securities are certificated and the provision will therefore not always be applicable. The Exchange also proposes to delete the requirement to provide worldwide and U.S. stock distribution schedules. The stock distribution schedule requirement is obsolete because the Exchange obtains the distribution information it needs from the applicant's transfer agent. In addition, the Exchange proposes to add a statement that the form of listing application and information regarding supporting documents are available on the Exchange's Web site or from the Exchange upon request.

Proposed Section 107.00—Financial Disclosure and Other Information Requirements

The Exchange proposes to include in the Manual a new Section 107.00 (''Financial Disclosure and Other Information Requirements'') as follows:

- *Section 107.01 (Auditing Standards)* A company's qualification to list will be determined on the basis of financial statements that are either: (i) prepared in accordance with U.S. generally accepted accounting principles; or (ii) reconciled to U.S. generally accepted accounting principles as required by the SEC's rules; or (iii) prepared in accordance with International Financial Reporting Standards, as issued by the International Accounting Standards Board, for Companies that are permitted to file financial statements using those standards consistent with the SEC's rules.
- *Section 107.02 (Auditor Registration)* Each company applying for initial listing must be audited by an independent public accountant that is registered as a public accounting firm with the Public Company Accounting Oversight Board, as provided for in Section 102 of the Sarbanes-Oxley Act of 2002.[8]
- *Section 107.03 (SEC Compliance)* No security shall be approved for listing if the issuer has not for the 12 months immediately preceding the date of listing filed on a timely basis all periodic reports required to be filed with the SEC or Other Regulatory Authority or the security is suspended from trading by the SEC pursuant to Section 12(k) of the Exchange Act. ''Other Regulatory Authority'' means: (i) in the case of a bank or savings authority identified in Section 12(i) of the Exchange Act, the agency vested with authority to enforce the provisions of Section 12 of the Exchange Act; or (ii) in the case of an insurance company that is subject to an exemption issued by the SEC that permits the listing of the security, notwithstanding its failure to be registered pursuant to section 12(b), the Commissioner of Insurance (or other officer or agency performing a similar function) of its domiciliary state.
- *Section 107.04 (Exchange Information Requests) The* Exchange may request any information or documentation, public or non-public, deemed necessary to make a determination regarding a security's initial listing, including, but not limited to, any material provided to or received from the SEC or Other Regulatory Authority (as defined in Section 107.03). A company's security may be denied listing if the company fails to provide such information within a reasonable period of time or if any communication to the Exchange contains a material misrepresentation or omits material information necessary to make the communication to the Exchange not misleading.

While the Exchange's historical and current practice has been to impose all of the foregoing requirements as a

with the Exchange); 204.04 (Business Purpose Changed); 204.13 (Form or Nature of Listed Securities Changed); 204.18 (Name Change); and 204.23 (Rights or Privileges of Listed Security Changed Last Modified: 8/21/2006).

[7] The Exchange's requirements with respect to the form and content of stock certificates are set forth in Section 501.01 of the Manual and those with respect to bond certificates are set forth in Section 501.02.

[8] 15 U.S.C. 7212.

matter of practice, it believes that the transparency of having these policies stated explicitly in the Manual will be helpful.

Amendments to Sections 204.00—Notice to and Filings With the Exchange, 204.04—Business Purpose Changed, 204.13—Form or Nature of Listed Securities Changed, 204.18—Name Change, and 204.23—Rights or Privileges of Listed Security Changed

The Exchange proposes to amend Sections 204.00, 204.04, 204.13, 204.18 and 204.23 to delete cross-references therein to sections of the Manual relating to the listing application and listing agreements and to replace such cross-references with a statement that the form of listing application and information regarding supporting documents required in connection with the listing application are available on the Exchange's Web site or from the Exchange upon request.

Amendment to Section 311.01—Publicity and Notice to the Exchange of Redemption

The Exchange proposes to delete from the forms of listing agreements for domestic and non-U.S. companies a provision that requires partial redemptions of listed securities to be either pro rata or by round lot. In lieu of those provisions, the Exchange proposes to amend Section 311.01 to impose an identical requirement.

Amendments to Sections 501.01—Stock Certificates and 501.02—Bond Certificates

The Exchange proposes to delete from the forms of listing agreements for domestic and non-U.S. companies a provision that requires listed companies to issue new certificates for listed securities replacing lost ones upon notification of loss of the original certificate and receipt of proper indemnity. In lieu of those provisions, the Exchange proposes to amend Section 501.01 to include an identical requirement.

The Exchange proposes to delete from the forms of listing agreements for domestic and non-U.S. companies a provision that provides that, in the event of the issuance of any duplicate bond to replace a bond which has been alleged to be lost, stolen or destroyed and the subsequent appearance of the original bond in the hands of an innocent bondholder, either the original or the duplicate bond must be taken up and cancelled and the issuer must deliver to such holder another bond theretofore issued and outstanding. In lieu of those provisions, the Exchange proposes to amend Section 501.02 to include an identical requirement.

Section 601.00 *et seq.*—Services To Be Provided by Transfer Agents and Registrars and Sections 906.01–906.03.—Agreements of Transfer Agents and Registrars With the Exchange

In its revised listing agreement, as described in Parts II and III below, the Exchange has included an explicit agreement by the applicant issuer to abide by the transfer agent and registrar requirements set forth in Section 601.00 of the Manual *et seq.* In light of that requirement in the proposed listing agreement and the explicit requirements of Section 601.00 *et seq.,* the Exchange proposes to no longer require the execution of the forms of transfer agent and registrar agreements currently set forth in Sections 906.01, 906.02 and 906.03 of the Manual. The Exchange notes that neither NASDAQ nor NYSE MKT requires similar agreements. As described in Part V below, the Exchange proposes to add to Section 601.01 certain requirements set forth in the transfer agent and registrar agreements that are not currently embodied in any other rule. In addition to deleting Sections 906.01, 906.02 and 906.03, the Exchange proposes to delete the references to those agreements in Section 601.01 and an erroneous reference in Section 601.01(B) to Section 906.04, which does not exist.[9] The Exchange proposes to delete Section 601.03 in its entirety, as it relates solely to the forms of transfer agent and registrar agreements which the Exchange is proposing to eliminate.

Modification to Section 701.02—Listing Fees

The Exchange proposes to modify the reference to Section 902.02 in Section 701.02 so that it will refer to the correct current title of Section 902.02, ''General Information on Fees.''

Amendment to Section 702.00—Original Listing Application Securities of Other Than Debt Securities

The Exchange proposes to amend Section 702.00 (Original Listing Application Securities of Other than Debt Securities) to replace the general information currently in that section with a general outline of the listing process which will be more informative for listing applicants.

Section 702.00 will be renamed ''Original Listing Application for Securities of an Issuer Which Does Not at the Time of Application Have any Other Securities Listed On the Exchange.'' The following is a description of the listing process as set forth in Section 702.00 as amended:

If a company wishes to list a class of securities (including common equity securities) but does not at the time of application have any other class of securities listed on the Exchange, the company must first seek a free confidential review of listing eligibility as set forth in Section 104.00. If, upon completion of this free confidential review, the Exchange determines that a company is eligible for listing, the Exchange will notify that company in writing (the ''clearance letter'') that it has been cleared to submit an original listing application. A clearance letter is valid for nine months from its date of issuance. If a company does not list within that nine month period and wishes to list thereafter, the Exchange will perform another confidential listing eligibility review as a condition to the issuance of a new clearance letter.

After receiving a clearance letter, a company choosing to list must file an original listing application. The original listing application and other required supporting documents can be found on *www.nyx.com.* A company should submit drafts of the original listing application and other required documents as far in advance as possible of the time it seeks Exchange authorization of its application. In the case of documents which by their nature cannot be completed until close to the listing date, the Exchange will authorize an application upon the condition that a company submits the supporting documents as soon as available, but, in any event, before the listing date. Prior to the listing date, the company's securities will be allocated to a Designated Market Maker pursuant to the Exchange's Allocation Policy. The company's Exchange representative will provide a copy of the Allocation Policy to the company.

Section 902.03 hereof requires certain categories of listing applicants to pay an Initial Application Fee as a prior condition to receipt of eligibility clearance. Promptly after making a determination that a company is eligible to list but subject to payment of the Initial Application Fee, the Exchange shall inform such company in writing that it is entitled to receive a clearance letter upon payment of the applicable

[9] The reference to Section 906.04 is included as a parenthetical after a reference to the ''Transfer Agent-Registrar Agreement Type A'' in Section 601.01 (B) and to the ''Transfer Agent-Registrar Agreement Type B'' in Section 601.01 (C), which are actually included in Section 906.03. The Exchange therefore believes that the erroneous references to Section 906.04 should have instead referred to Section 906.03.

Initial Application Fee.[10] Applicants that are not subject to the Initial Application Fee will not receive any similar notification, but rather will receive a clearance letter promptly after the Exchange has made an eligibility determination.

In addition to applying to the Exchange, a company must, prior to the listing date, register its securities with the SEC under the Exchange Act (unless securities are exempt from the registration requirement). When the Exchange approves securities for listing and receives a company's Exchange Act registration statement, it will certify such approval to the SEC. (*See* Section 702.01 (Registration under the Securities Exchange Act of 1934).)

The Exchange proposes to delete from the Manual Sections 702.01 (Introduction), 702.02 (Timetable for Original Listing of Securities Other than Debt Securities), 702.03 (Submission of Listing Application), 702.04 (Supporting Documents) and 702.05 (Printing of Application).

Section 702.01 describes the listing application as historically used, which was not on a set form and required companies to provide a narrative of the information relevant to the particular issue. The listing application form used going forward will be in the form of a questionnaire and the Exchange will not require the sort of narrative that was historically included in the listing application, as this information is typically all readily available in the company's SEC filings, as discussed in Parts II and III below. Section 702.02 is being eliminated because the timeline provided in that section is very approximate and does not necessarily bear any relation to the listing experience of any individual company. As such, the Exchange believes it is of limited practical value.

The Exchange proposes to eliminate Section 702.03 (Submission of Listing Application), as the Exchange's requirements with respect to the submission of copies of the listing application will be set forth in detail in listing checklists posted on the Exchange's Web site. The Exchange also proposes to delete Section 702.04 (Supporting Documents). To the extent that the documents described in Section 702.04 continue to be relevant to the listing process, the Exchange will request them from issuers pursuant to the listing application checklists described above.

The following is the list of supporting documents required by Section 702.04 in its current form and a discussion of whether each individual document will continue to be required and, if not, why not:

Signed Application: The Exchange will continue to require copies of the signed application but will require two signed copies of the application going forward rather than the signed copy and five conformed copies specified in Section 702.04, as Exchange staff only require two copies for internal record keeping purposes.

Charter and By-Laws: The charter and by-laws will continue to be required. The Exchange proposes to no longer require that the copies provided be certified, as the certification is not necessary for its review.

Resolutions: The Exchange will continue to require copies of the applicable board resolutions, although they will no longer need to be certified, as certification is not necessary to the Exchange's review.

Opinions of Counsel/Certificate of Good Standing: These documents will continue to be required.

Stock Distribution Schedule: The Exchange proposes to eliminate the stock distribution schedule requirement. The stock distribution schedule requirement is obsolete because the Exchange obtains the distribution information it needs from the applicant's public filings and from its transfer agent.

Certificate of Transfer Agent/ Certificate of Registrar: The Exchange proposes to no longer require these documents, as the information the Exchange needs about the applicant's outstanding shares is available in its prospectus or periodic SEC reports, as well as the report of the applicant's outstanding shares that will be required to be delivered to the Exchange once a quarter after listing.

Notice of Availability of Stock Certificates: The Exchange proposes to no longer require this document as all transactions in listed securities in the national market system are conducted electronically through DTCC.

Specimens of the Securities for Which Listing Application is Made: The Exchange proposes to continue to require copies of specimen certificates, if any.

Public Authority Certificate: The Exchange proposes to continue to require public authority certificates, where applicable.

Prospectus: The Exchange does not propose to continue to require applicants to provide copies of their final prospectuses, as they are publicly available on the SEC's Web site.

Financial Statements: The Exchange does not propose to continue to require applicants to provide copies of their financial statements, as they are included in the applicant's SEC filings which are publicly available on the SEC's Web site.

Adjustments to Historical Financial Data: The Exchange proposes to continue to require companies to provide as part of their application copies of any adjusted financial data used in connection with the financial qualification for listing of the applicant.

Listing Agreement: The Exchange proposes to require the applicable form of proposed revised listing agreement as set forth elsewhere in this filing.

Memorandum with Respect to Unpaid Dividends, Unsettled Rights and Record Dates: The Exchange proposes to no longer require this document, as all of the required information is included in the proposed revised listing application included in Exhibit 3 hereto.[11]

Registration form under the Securities Exchange Act of 1934: The Exchange proposes to continue to require applicants to supply this document.

The second paragraph of Section 702.04 requires applicants to provide required documents at least one week prior to listing or, if this is not possible because of the nature of the document in question, as soon as practicable thereafter, but in any event prior to the first day of trading subject to the Exchange's conditional listing approval. As set forth above, similar requirements will be included in Section 702.00 as amended. Section 702.00 as amended will provide that documents should be provided to the Exchange as far in advance of when the company seeks authorization of its application as possible.

The Exchange proposes to delete Section 702.05 (Printing of Application). The Exchange has not distributed printed copies of approved listing applications for many years and, consequently, the discussion of the printing and distribution of applications in Section 702.05 has no current relevance. The listing application in its current form requires issuers to provide significant amounts of disclosure about the issuer's business and financial condition and market participants needed copies of applications to obtain access to that information. The listing application has lost its relevance as a disclosure document in recent decades due to the development of the SEC's

[10] The purpose of this notification is to assure any such company that it will not have to pay a non-refundable Initial Application Fee subject to any risk that it will not subsequently receive a clearance letter.

[11] The Commission notes that Exhibit 3 is attached to the filing, not to this Notice.

own comprehensive disclosure system. Market participants now rely on a company's SEC filings as a comprehensive source of information about the applicant company and they no longer need to receive copies of a company's listing application for that purpose.

Section 702.06 (Registration under the Securities Exchange Act of 1934) will be renumbered as Section 702.01.

Amendment to 703.00—Subsequent Listing Applications and Debt Securities Applications

The Exchange proposes to amend Section 703.00 by modifying subsections 703.01 through 703.14, each of which relates to the filing of supplemental listing applications in different circumstances and in relation to different types of securities. In each case, the subsection will be amended to delete references to the form of supplemental listing application set forth in Section 903.02 and also the lists of documents required to be submitted in connection with the relevant supplemental listing application. Instead, each applicable subsection of Section 703.00 will state that the form of listing application and information regarding supporting documents required in connection with supplemental listing applications and debt securities applications are available on the Exchange's Web site or from the Exchange upon request.

Section 703.01 Part 1(A) currently states that the application must be in the form of a memo from the company. This statement is modified to instead provide that the applicable forms of listing applications and information regarding supporting documents required in connection with supplemental listing applications and debt securities applications are available on the Exchange's Web site or from the Exchange upon request.

Section 703.01 Part 2(B) currently provides that four signed typewritten copies of the supplemental listing application must be provided to the Exchange. The Exchange currently needs only two signed copies and its needs may change over time. Therefore the Exchange proposes to amend this provision so that it will state that information about the number of required copies of the application can be found on the Exchange's Web site or will be provided by Exchange staff upon request.

The Exchange proposes to amend Section 703.02 Part 1(B) to remove an obsolete reference to the Exchange's weekly bulletin, which is no longer distributed.

The Exchange proposes to amend a reference in Section 703.02 (part 2) (Stock Split/Stock Rights/Stock Dividend Listing Process) of the Manual to the form of due-bill agreement as currently set forth in Section 904.05 so that it will refer to Section 904.02 to reflect the proposed renumbering described below.

Proposed Amendment to Section 802.01D—Other Criteria

Section 802.01D of the Manual sets forth non-quantitative bases on which the Exchange may make a determination to delist a company when it deems such action to be appropriate. The Exchange proposes to add to this section a provision explicitly providing that the Exchange may delist a company for a breach of the terms of its listing agreement. While Section 802.01D already provides broad discretion to the Exchange to delist a company when its continued listing is deemed inadvisable, the Exchange believes that a violation of the terms of a company's listing agreement may in certain circumstances be of such a serious nature that it should result in a delisting and that it is desirable to make that possibility explicit in the rule.

The Exchange also proposes to correct typographical errors in Section 802.01D by replacing colons with semi-colons in the list of possible defects in an audit opinion that may be a basis for delisting.

Section 901.00—Listing Agreements

Section 901.00 sets forth the following agreements that are required for listing on the Exchange:

901.01—Listing Agreement for Domestic Companies
901.02—Listing Agreement for Foreign Private Issuers
901.03—Listing Agreement for Depositary of a Foreign Private Issuer
901.04—For Japanese Companies—Free Share Distribution Understanding
901.05—Listing Agreement for Voting Trusts

As the Exchange has amended the Manual over time, the forms of listing agreements have not always been amended to reflect changes made to the underlying listing requirements. Certain provisions of the listing agreements also reflect practices at the Exchange and in the securities markets generally that are no longer prevalent, such as the transfer of physical securities in Exchange transactions rather than the contemporary system of book entry transfer through the Depository Trust & Clearing Corporation (''DTCC''). Consequently, there are provisions in the listing agreements that are obsolete.

The Exchange proposes to remove from the Manual each of the agreements set forth in Sections 901.01 through 901.05. Revised versions of the agreements will be posted on the Exchange's Web site. These revised versions will be streamlined to remove obsolete provisions and those provisions that are duplicative of requirements included elsewhere in the Manual. The Exchange believes that this approach is consistent with the practice of other national securities exchanges, including NASDAQ and NYSE MKT.

The Exchange's proposed approach to each item included in the current forms of listing agreements for domestic companies and foreign private issuers in Sections 901.01 and 901.02 is set out in Parts II and III below.

The Exchange proposes to delete from the Manual each of the listing agreement for the depositary of a foreign private issuer set forth in Section 901.03, the Free Share Distribution Agreement for Japanese companies in Section 901.04 and the Listing Agreement for Voting Trusts set forth in Section 901.05. However, the current forms of those agreements, as currently set forth in Sections 901.03, 901.04 and 901.05, will be available on the Exchange's Web site at *www.nyx.com* and will continue to be used where applicable.

Section 902.01—Listed Securities Fee Agreement

The Exchange proposes to eliminate the Listing Securities Fee Agreement as an agreement to pay all applicable fees is included as part of the proposed amended listing agreement. Accordingly Section 902.01 of the Manual will be deleted in its entirety.

Section 903.00—Listing Applications

The Exchange proposes to delete from the Manual the form of original listing application contained in Section 903.01 and the form of supplemental listing application contained in Section 903.02. Accordingly, Sections 903.01 and 903.02 will be deleted from the Manual in their entirety. In addition, Section 903.00, which provides a summary of the current contents of Sections 903.01 and 903.02, will be deleted in its entirety. A revised form of the original listing application and the existing forms of the supplemental listing applications for various types of issuance as currently set forth in Section 903.02 (which are not being revised at this time) will be provided on the Exchange's Web site. A fuller discussion of the proposed changes to the form of original listing application is included in Part IV below.

Section 904.00—Other Forms

The Exchange proposes to delete from the Manual Sections 904.01 (Stock Distribution Schedule) and 904.02 (Unpaid Dividends, Unsettled Rights, and Record Dates—Memorandum). Section 904.03 (''Due Bill'' Form Letter) will be renumbered as Section 904.01. Section 904.04 (Foreign Currency Warrants and Currency Index Warrants and Stock Index Warrants Membership Circular) will be renumbered as Section 904.02.

The Stock Distribution Schedule in Section 904.01 is obsolete because the Exchange obtains the distribution information it needs from the company's transfer agent. The Exchange notes that the only information it needs for purposes of determining the company's compliance with Exchange distribution requirements is the number of round lot holders. Information about how many holders there are of different ranges of numbers of shares, the 10 largest holdings, and the geographical distribution of stockholders, is not relevant to any Exchange listing requirement.

The Exchange proposes to require applicants to provide in the revised form of original listing application the information required by the memorandum currently set forth in Section 904.02.[12]

II. Listing Agreement for Domestic Companies

The following sets forth each of the requirements included in the current form of listing agreement for domestic companies currently set forth in Section 901.01 of the Manual and the Exchange's proposed approach to each item upon adoption of its new form of listing agreement. Also set forth are the requirements that would be in the proposed amended listing agreement for domestic companies.

Section I

1. The Corporation will promptly notify the Exchange of any change in the general character or nature of its business.

• The Exchange proposes to delete this requirement as it is identical to Section 204.19 of the Manual.

2. The Corporation will promptly notify the Exchange of any changes of officers or directors.

• The Exchange proposes to delete this requirement as it is identical to Section 204.10 of the Manual.

3. The Corporation will promptly notify the Exchange in the event that it or any company controlled by it shall dispose of any property or of any stock interest in any of its subsidiary or controlled companies, if such disposal will materially affect the financial position of the Corporation or the nature or extent of its operations.

• The Exchange proposes to delete this requirement as it is identical to Section 204.11 of the Manual.

4. The Corporation will promptly notify the Exchange of any change in, or removal of, collateral deposited under any mortgage or trust indenture, under which securities of the Corporation listed on the Exchange have been issued.

• The Exchange proposes to delete this requirement as it is identical to Section 204.07 of the Manual.

5. The Corporation will:

a. File with the Exchange four copies of all material mailed by the Corporation to its stockholders with respect to any amendment or proposed amendment to its Certificate of Incorporation.

• Section 204.00(B) of the Manual requires companies to promptly provide to the Exchange one hard copy of any notice to shareholders with respect to any proposed amendments to the company's charter, as well as a certified copy of the amended charter along with a letter of transmittal indicating the sections amended since the previous filing of amendments or amended documents, following the date that such notice is given or the charter is amended. Section 204.00(B) requires companies to follow a similar procedure with respect to resolutions of the Board of Directors, or any certificate or other document, having the effect of an amendment to the charter or by-laws. The requirements of Section 204.00(B) serve the Exchange's needs with respect to charter amendments, in particular because all material used in soliciting shareholders' votes in connection with any charter amendment must be filed with the SEC and are readily accessible by the NYSE's staff on the SEC Web site. In addition, Section 402.01 of the Manual requires listed companies to file with the Exchange six definitive copies of the proxy material (together with proxy card) not later than the date on which such material is sent, or given, to any security holders. The Exchange notes that compliance with Section 402.01 fulfills the company's obligation under Exchange Act Rule 14a–6(c) to file with the Exchange three copies of all materials mailed to shareholders in connection with a proxy solicitation. Consequently, the Exchange proposes to eliminate this section of the listing agreement.

b. File with the Exchange a copy of any amendment to its Certificate of Incorporation, or resolution of Directors in the nature of an amendment, certified by the Secretary of the state of incorporation, as soon as such amendment or resolution shall have been filed in the appropriate state office.

• Section 204.00(B) of the Manual requires companies to provide to the Exchange a certified copy of the amended charter. Consequently, the Exchange proposes to eliminate this section of the listing agreement.

c. File with the Exchange a copy of any amendment to its By-Laws, certified by a duly authorized officer of the Corporation, as soon as such amendment shall have become effective.

• The Exchange proposes to delete this requirement as it is duplicative of Section 204.00(B) of the Manual, which requires companies to file with the Exchange copies of any amendments to their by-laws.

6. The Corporation will disclose in its annual report to shareholders, for the year covered by the report: (1) The number of shares of its stock issuable under outstanding options at the beginning of the year; separate totals of changes in the number of shares of its stock under option resulting from issuance, exercise, expiration or cancellation of options; and the number of shares issuable under outstanding options at the close of the year, (2) the number of unoptioned shares available at the beginning and at the close of the year for the granting of options under an option plan, and (3) any changes in the exercise price of outstanding options, through cancellation and reissuance or otherwise, except price changes resulting from the normal operation of anti-dilution provisions of the options.

• The Exchange proposes to delete this section, as the SEC previously approved the elimination of a similar requirement in Section 703.09 of the Manual on the basis that the SEC's own rules provided for comprehensive disclosure regarding options.[13]

7. The Corporation will report to the Exchange, within ten days after the close of a fiscal quarter, in the event any previously issued shares of any stock of the Corporation listed on the Exchange have been reacquired or disposed of, directly or indirectly, for the account of the Corporation during such fiscal quarter, such report showing separate totals for acquisitions and dispositions and the number of shares of such stock so held by it at the end of such quarter.

[12] *See* Section II.A of the proposed form of listing application set forth in Exhibit 3 hereto.

[13] *See* Securities Exchange Act Release No. 54344 (August 21, 2006), 71 FR 51260 (August 29, 2006) (SR–NYSE–2005–68).

• The Exchange proposes to delete this requirement as it is identical to Section 204.25 of the Manual.

8. The Corporation will promptly notify the Exchange of all facts relating to the purchase, direct or indirect, of any of its securities listed on the Exchange at a price in excess of the market price of such security prevailing on the Exchange at the time of such purchase.

• Exchange rules have not prohibited off-board trading for many years. NYSE Regulation, Inc. (''NYSE Regulation'') conducts a variety of surveillances based on trading on the NYSE to detect potentially manipulative trading activity in Exchange listed securities, as well as other violative activity. NYSE Regulation investigates alerts triggered by its surveillances and, if warranted, either (i) initiates regulatory action against the responsible member or member organization or (ii) refers to the matter to the SEC if the responsible market participant is not subject to the Exchange's jurisdiction. It is our understanding that other market centers that offer trading in NYSE listed securities pursuant to unlisted trading privileges also conduct surveillance of trading on their markets. NYSE Regulation relies on its regulatory surveillance program to monitor trading in listed securities, rather than on reporting by the companies themselves, and believes that its surveillance program is adequate for that purpose. Of course, any complaints or inquiries by listed companies or others are thoroughly investigated by NYSE Regulation, which takes action if violative activity is identified. In addition, Regulation NMS and the order protection rules of the Exchange and other market centers are designed to assure that orders are not executed outside the prevailing market, subject to certain exceptions. With respect to a listed company's purchases of its own securities, SEC Rule 10b–18 provides a safe harbor for such purchases that meet the conditions set forth in that rule and companies are required to report all purchases of their own securities pursuant to Item 703 of Regulation S–K.

Consequently, the Exchange has for some time not required companies to comply with the requirement to inform the Exchange about any share purchases at prices in excess of the market price on the Exchange and therefore proposes to delete this provision, as the Exchange believes that the regulatory concerns originally underpinning this requirement are now more appropriately addressed through its regulatory surveillance program and SEC rules and reporting requirements.

9. The Corporation will not select any of its securities listed on the Exchange for redemption otherwise than by lot or pro rata, and will not set a redemption date earlier than fifteen days after the date corporate action is taken to authorize the redemption.

• The Exchange proposes to delete this requirement. The fifteen days [sic] notice of a date set for partial redemptions is included in Sections 204.22 and 311.01 of the Manual. The Exchange proposes to amend Section 311.01 to include the requirement that redemptions of listed securities must be pro rata or by lot.

10. The Corporation will promptly notify the Exchange of any corporate action which will result in the redemption, cancellation or retirement, in whole or in part, of any of its securities listed on the Exchange, and will notify the Exchange as soon as the Corporation has notice of any other action which will result in any such redemption, cancellation or retirement.

• The Exchange proposes to delete this requirement as it is duplicative of Section 204.22 of the Manual.

11. The Corporation will promptly notify the Exchange of action taken to fix a stockholders' record date, or to close the transfer books, for any purpose, and will take such action at such time as will permit giving the Exchange at least ten days' notice in advance of such record date or closing of the books.

• The Exchange proposes to delete this requirement as it is duplicative of the notice requirements contained in Sections 204.06, 204.17, 204.21 and 401.02 of the Manual. The Exchange notes that it reminds listed companies of its notice requirements in a letter sent annually to all listed companies and that the notice requirements are also included in the ''Guide to Requirements for Submitting Data to the Exchange'' which is included as part of the introductory material in the Manual.

12. In case the securities to be listed are in temporary form, the Corporation agrees to order permanent engraved securities within thirty days after the date of listing.

• The Exchange proposes to delete this provision, as all securities traded through the facilities of the Exchange are now traded electronically, so requirements with respect to securities certificates are no longer relevant.

13. The Corporation will furnish to the Exchange on demand such information concerning the Corporation as the Exchange may reasonably require.

• The Exchange proposes to retain this provision in its revised form of listing agreement and in proposed new Section 107.04.

14. The Corporation will not make any change in the form or nature of any of its securities listed on the Exchange, nor in the rights or privileges of the holders thereof, without having given twenty days' prior notice to the Exchange of the proposed change, and having made application for the listing of the securities as changed if the Exchange shall so require.

• The Exchange proposes to delete this requirement as it is duplicative of Section 204.13 of the Manual.

15. The Corporation will make available to the Exchange, upon request, the names of member firms of the Exchange which are registered owners of stock of the Corporation listed on the Exchange if at any time the need for such stock for loaning purposes on the Exchange should develop, and in addition, if found necessary, will use its best efforts with any known large holders to make reasonable amounts of such stock available for such purposes in accordance with the rules of the Exchange.

• The Exchange proposes to delete this requirement, as it is not reflective of current Exchange practices.

16. The Corporation will promptly notify the Exchange of any diminution in the supply of stock available for the market occasioned by deposit of stock under voting trust agreements or other deposit agreements, if knowledge of any such actual or proposed deposits should come to the official attention of the officers or directors of the Corporation.

• The Exchange proposes to delete this requirement as it is duplicative of Section 204.09 of the Manual.

17. The Corporation will make application to the Exchange for the listing of additional amounts of securities listed on the Exchange sufficiently prior to the issuance thereof to permit action in due course upon such application.

• The Exchange proposes to delete this requirement as it is duplicative of Section 703.01 Part 2 of the Manual.

Section II

1. The Corporation will publish at least once a year and submit to its stockholders at least fifteen days in advance of the annual meeting of such stockholders and not later than three months after the close of the last preceding fiscal year of the Corporation a balance sheet as of the end of such fiscal year, and a surplus and income statement for such fiscal year of the Corporation as a separate corporate

entity and of each corporation in which it holds directly or indirectly a majority of the equity stock; or in lieu thereof, eliminating all intercompany transactions, a consolidated balance sheet of the Corporation and its subsidiaries as of the end of its last previous fiscal year, and a consolidated surplus statement and a consolidated income statement of the Corporation and its subsidiaries for such fiscal year. If any such consolidated statement shall exclude corporations a majority of whose equity stock is owned directly or indirectly by the Corporation:

(a) the caption of, or a note to, such statement will show the degree of consolidation; b) the consolidated income account will reflect, either in a footnote or otherwise, the parent company's proportion of the sum of, or difference between, current earnings or losses and the dividends of such unconsolidated subsidiaries for the period of the report; and (c) the consolidated balance sheet will reflect, either in a footnote or otherwise, the extent to which the equity of the parent company in such subsidiaries has been increased or diminished since the date of acquisition as a result of profits, losses and distributions.

Appropriate reserves, in accordance with good accounting practice, will be made against profits arising out of all transactions with unconsolidated subsidiaries in either parent company statements or consolidated statements.

Such statements will reflect the existence of any default in interest, cumulative dividend requirements, sinking fund or redemption fund requirements of the Corporation and of any controlled corporation, whether consolidated or unconsolidated.

• The Exchange proposes to delete this provision, as it is duplicative in some respects of SEC rules requiring the annual filing of financial statements as part of the company's annual report on Form 10–K, 20–F, 40–F or NCSR filed with the SEC and the requirement of the SEC's proxy rules, applicable to domestic Exchange-listed companies, that when an issuer is soliciting proxies for its annual shareholders meeting, the issuer must distribute an annual report including its annual financial statements to shareholders, or notifies shareholders where such information may be accessed on the internet, in connection with proxy solicitation, at the same time as or prior to distribution of the proxy statement.[14] The Exchange notes that Section 203.01 of the Manual requires listed companies that are required to file with the SEC an annual report including audited financial statements (i.e., an annual report on Form 10–K, 20–F, 40–F or NCSR) to simultaneously make such annual report available on or through the company's Web site and to undertake to provide, upon request, a hard copy of its audited financial statements free of charge. The Exchange also notes that Section 802.01E of the Manual requires the delisting of any listed Company that fails to file its annual report within a compliance period determined by the Exchange, but in no event longer than 12 months from the original filing due date.

For foreign private issuers, eliminating this requirement is a substantive change. However, the SEC's proxy rules are not applicable to foreign private issuers and, in conformity with that position, the NYSE does not intend to impose such requirements itself.

2. All financial statements contained in annual reports of the Corporation to its stockholders will be audited by independent public accountants qualified under the laws of some state or country, and will be accompanied by a copy of the certificate made by them with respect to their audit of such statements showing the scope of such audit and the qualifications, if any, with respect thereto.

The Corporation will promptly notify the Exchange if it changes its independent public accountants regularly auditing the books and accounts of the Corporation.

• The Exchange proposes to eliminate the first paragraph above as it is duplicative of the SEC's requirements with respect to Form 10–K and Section 107.02 of the Manual. The Exchange proposes to delete the second paragraph above, as it is duplicative of the requirement to file a Form 8–K (under Item 4.01 of Form 8–K) when a company's auditor resigns or is dismissed. The Exchange monitors the SEC filings of listed companies and would promptly become aware of the filing of a Form 8–K reporting a change of auditors.

3. All financial statements contained in annual reports of the Corporation to its stockholders shall be in the same form as the corresponding statements contained in the listing application in connection with which this Listing Agreement is made, and shall disclose any substantial items of unusual or non-recurrent nature.

• The Exchange proposes to delete this requirement, as the form of companies' annual financial statements is dictated by the SEC's Form 10–K requirements rather than Exchange rules. The Exchange notes that an identical provision was previously deleted from Section 203.01 of the Manual.

4. The Corporation will publish quarterly statements of earnings on the basis of the same degree of consolidation as in the annual report. Such statements will disclose any substantial items of unusual or non-recurrent nature and will show either net income before and after federal income taxes or net income and the amount of federal income taxes.

• The Exchange proposes to replace this requirement with a requirement that companies file quarterly financial information on Form 10–Q. The Exchange notes that Section 802.01E of the Manual, which describes the compliance and delisting provisions for companies that are late in filing their annual reports with the SEC, does not subject companies to delisting if they are late in filing a Form 10–Q. The Exchange does not currently delist companies as a consequence of a failure to file a Form 10–Q on a timely basis, although the Exchange has discussed with the SEC the establishment of such a requirement in connection with a proposed harmonization of the late filer rules of all of the national securities exchanges that list equity securities. However, the Exchange will (as has always been the case) consider a company's failure to timely file its Form 10-Qs as part of its ongoing review of whether a company is suitable for continued listing.

5. The Corporation will not make, nor will it permit any subsidiary directly or indirectly controlled by it to make, any substantial charges against capital surplus, without notifying the Exchange. If so requested by the Exchange, the Corporation will submit such charges to stockholders for approval or ratification.

• The Exchange proposes to delete this requirement as it is duplicative of Section 204.05 of the Manual.

6. The Corporation will not make any substantial change, nor will it permit any subsidiary directly or indirectly controlled by it to make any substantial change, in accounting methods, in policies as to depreciation and depletion or in bases of valuation of inventories or other assets, without notifying the Exchange and disclosing the effect of any such change in its next succeeding interim and annual report to its stockholders.

• The Exchange proposes to delete this requirement, as companies are required by SEC rules to disclose in their periodic reports on Form 10–K and 10–Q any changes in accounting

[14] *See* Securities Exchange Act Rule 14C–3.

methods and any effect of such changes on the company's financial statements.

7. The Corporation will maintain an audit committee in conformity with Exchange requirements.

• The Exchange proposes to delete this provision, as it is duplicative of Sections 303A.06 and 303A.07 of the Manual, which require listed companies to have an audit committee in compliance with Exchange rules and SEC Rule 10A–3.

Section III

1. The Corporation will maintain, in accordance with the requirements of the Exchange:

a. An office or agency where the principal of and interest on all bonds of the Corporation listed on the Exchange shall be payable and where any such bonds which are registerable as to principal or interest may be registered.

• The Exchange proposes to delete this requirement as it is duplicative of Section 601.00(B) of the Manual.

b. An office or agency where:

(1) All stock of the Corporation listed on the Exchange shall be transferable.

(2) Checks for dividends and other payments with respect to stock listed on the Exchange may be presented for immediate payment.

(3) A security listed on the Exchange which is convertible will be accepted for conversion.

• The Exchange proposes to delete this requirement as it is duplicative of Section 601.00(A) of the Manual.

c. A registrar where stock of the Corporation listed on the Exchange shall be registerable. Such registrar shall be a bank or trust company not acting as transfer agent for the same security.

• The Exchange proposes to delete this requirement as it is duplicative of Section 601.01 of the Manual. The Exchange notes that—contrary to this provision in the listing agreement—Section 601.01(B) of the Manual permits a transfer agent to act in a dual capacity as registrar.

2. The Corporation will not appoint a transfer agent, registrar or fiscal agent of, nor a trustee under a mortgage or other instrument relating to, any security of the Corporation listed on the Exchange without prior notice to the Exchange, and the Corporation will not appoint a registrar for its stock listed on the Exchange unless such registrar, at the time of its appointment becoming effective, is qualified with the Exchange as a registrar for securities listed on the Exchange, nor will the Corporation select an officer or director of the Corporation as a trustee under a mortgage or other instrument relating to a security of the Corporation listed on the Exchange.

• The Exchange proposes to delete this provision, because the requirements with respect to the appointment of transfer agents and registrars are set forth in Section 601.01 of the Manual and the requirements with respect to trustees are set forth in Section 603.01—603.04 of the Manual.

3. The Corporation will have on hand at all times a sufficient supply of certificates to meet the demands for transfer. If at any time the stock certificates of the Corporation do not recite the preferences of all classes of its stock, it will furnish to its stockholders, upon request and without charge, a printed copy of preferences of all classes of such stock.

• The Exchange proposes to delete the foregoing provision. The Exchange believes that the requirement that a company must have sufficient certificates available for transfer is anachronistic in light of the fact that (i) all trading in securities through the facilities of the Exchange is electronic, (ii) Section 501.00 of the Manual requires all listed securities to be DRS eligible, and (iii) some companies have moved to complete dematerialization. Section 501.01 of the Manual requires that a statement of the rights and preferences of authorized classes or series of stock be readily available to shareholders, so the second sentence of the above provision is duplicative of that requirement.

4. The Corporation will publish immediately to the holders of any of its securities listed on the Exchange any action taken by the Corporation with respect to dividends or to the allotment of rights to subscribe or to any rights or benefits pertaining to the ownership of its securities listed on the Exchange; and will give prompt notice to the Exchange of any such action; and will afford the holders of its securities listed on the Exchange a proper period within which to record their interests and to exercise their rights; and will issue all such rights or benefits in form approved by the Exchange.

• Section 202.05 of the Manual requires a listed company to release quickly to the public any news or information which might reasonably be expected to materially affect the market for its securities. Section 202.06 of the Manual specifies that information that should be published immediately via a press release or other Regulation FD compliant method would include dividend announcements, tender offers and stock splits. In addition, the material news events listed in Section 202.06 are intended to be illustrative rather than a complete list of instances where a news release is required. It is the Exchange's position that any corporate action that represents a material benefit to the company's shareholders should be publicized as required by Section 202.06, including but not limited to the benefits to shareholders specifically identified in Section 202.06. The Exchange proposes to delete this requirement as the Exchange's requirements with respect to dividends and other rights are set forth in Section 204.12 of the Manual.

5. The Corporation will solicit proxies for all meetings of stockholders.

• The Exchange proposes to delete this requirement as it is duplicative of Section 402.04 of the Manual.

6. The Corporation will issue new certificates for securities listed on the Exchange replacing lost ones forthwith upon notification of loss and receipt of proper indemnity. In the event of the issuance of any duplicate bond to replace a bond which has been alleged to be lost, stolen or destroyed and the subsequent appearance of the original bond in the hands of an innocent bondholder, either the original or the duplicate bond will be taken up and cancelled and the Corporation will deliver to such holder another bond theretofore issued and outstanding.

• The Exchange proposes to delete this provision from the listing agreement. The provision in the first sentence will be added as an amendment to Section 501.01 of the Manual and the provision in the second sentence will be added as an amendment to Section 501.02 of the Manual.

7. The Corporation will pay when due any applicable Listing Fees established from time to time by the Exchange.

• The Exchange intends to retain this provision.

Amended Listing Agreement for Domestic Companies

The following are the requirements that would be set forth in the proposed amended listing agreement for domestic companies:

1. The applicant certifies that it understands and agrees to comply with all current and future rules, listing standards, procedures and policies of the Exchange as they may be amended from time to time.

2. The applicant agrees to promptly notify the Exchange in writing of any corporate action or other event which will cause the applicant to cease to be in compliance with Exchange listing requirements.

3. The applicant understands that the Exchange may remove its securities

from listing and trading on the Exchange, pursuant to applicable procedures, if it fails to meet one or more requirements of Paragraphs 1–2.

4. The applicant understands that if an exception to any of the provisions of any of the Exchange rules has been granted by the Exchange, such exception shall, during the time it is in effect, supersede any conflicting provision of the listing agreement.

5. The applicant agrees to list on the Exchange all subsequent amounts of the securit(y/ies) to be listed which may be issued or authorized for issuance.

6. The applicant agrees to furnish to the Exchange on demand such information concerning the applicant as the Exchange may reasonably request.

7. For purposes of publicity related to the applicant's listing on the Exchange, the applicant authorizes the Exchange to use the applicant's corporate logos, Web site address, trade names, and trade/service marks in order to convey quotation information, transactional reporting information and any other information related to the applicant's listing on the Exchange.

8. The applicant indemnifies the Exchange and holds it harmless from any third party rights and/or claims arising out of the Exchange's or any of its affiliates use of the applicant's corporate logos, Web site address, trade names, trade/service marks and/or the trading symbol used by the applicant.

9. The applicant will maintain a transfer agent and a registrar, as necessary, which satisfy the applicable requirements set forth in Section 601.00 *et seq.* of the Manual.

10. The applicant agrees to pay, when due, all fees associated with its listing of securities on the Exchange, in accordance with the Exchange's rules.

11. The applicant agrees to file all required periodic financial reports with the SEC, including annual reports and, where applicable, quarterly or semi-annual reports, by the due dates established by the SEC.

12. The applicant agrees to comply with all requirements under the federal securities laws and applicable SEC rules.

13. Nothing contained in or inferred from the listing agreement shall be construed as constituting the applicant's contract for the continued listing of the applicant's securities on the Exchange. The applicant understands that the Exchange may, consistent with applicable laws and SEC rules, suspend its securities with or without prior notice to the applicant, upon failure of the applicant to comply with any one or more sections of the listing agreement, or when, in its sole discretion, the Exchange shall determine that such suspension of dealings is in the public interest or otherwise warranted.

III. Listing Agreement for Foreign Private Issuers

The following sets forth each of the requirements included in the current form of listing agreement for foreign private issuers currently set forth in Section 901.02 of the Manual and the Exchange's proposed approach to each item upon adoption of its new form of listing agreement for foreign private issuers, which in many cases refer to the corresponding provision of the amended listing agreement for domestic companies as described in Part II hereof. Also set forth are the requirements that would be in the proposed amended listing agreement for domestic companies.

Section I

1. The Corporation will promptly notify the Exchange of any change in the general character or nature of its business.

• See response for same provision in Section I.1 of the listing agreement for domestic companies.

2. The Corporation will promptly notify the Exchange of any changes of officers or directors.

• See response for same provision in Section I.2 of the listing agreement for domestic companies.

3. The Corporation will promptly notify the Exchange in the event that it or any company controlled by it shall dispose of any property or of any stock interest in any of its subsidiary or controlled companies, if such disposal will materially affect the financial position of the Corporation or the nature or extent of its operations.

• See response for same provision in Section I.3 of the listing agreement for domestic companies.

4. The Corporation will promptly notify the Exchange of any change in, or removal of, collateral deposited under any mortgage or trust indenture, under which securities of the Corporation listed on the Exchange have been issued.

• See response for same provision in Section I.4 of the listing agreement for domestic companies.

5. The Corporation will:

a. File with the Exchange four copies (including translations) of all material mailed by the Corporation to its stockholders with respect to any amendment or proposed amendments to its Certificate of Incorporation.

• See response for same provision in Section I.5. a of the listing agreement for domestic companies.

b. File with the Exchange a duly certified copy (including translation) of any amendment to its Certificate of Incorporation, or resolutions of Directors in the nature of an amendment, as soon as such amendment or resolution shall have become effective.

• See response for same provision in Section I.5.b of the listing agreement for domestic companies.

c. File with the Exchange a duly certified copy (including translation) of any amendment to its By-Laws as soon as such amendment shall have become effective.

• See response for same provision in Section I.5.c of the listing agreement for domestic companies.

6. The Corporation will disclose in its annual report to stockholders, for the year covered by the report, (a) the number of shares of its stock issuable under outstanding options at the beginning of the year; separate totals of changes in the number of shares of its stock under option resulting from issuance, exercise, expiration or cancellation of options; and the number of shares of its stock issuable under outstanding options at the close of the year; (b) the number of unoptioned shares of its stock available at the beginning and at the close of the year for the granting of options under an option plan; and (c) any changes in the exercise price of outstanding options, through cancellation and reissuance or otherwise, except price changes resulting from the normal operation of anti-dilution provisions of the options.

• The Exchange proposes to delete this section, as the SEC previously approved the elimination of a similar provision in Section 703.09 of the Manual.

7. The Corporation will promptly notify the Exchange of all facts relating to the purchase, direct or indirect, of any of its _____ listed on the Exchange at a price in excess of the market price of such security prevailing on the Exchange at the time of such purchase.

• See response for same provision in Section I.8 of the listing agreement for domestic companies. Consequently, the Exchange purposes to delete the requirement that listed companies must inform it about any share purchases at prices in excess of the market price on the Exchange, as it believes that the regulatory concerns originally underpinning this requirement are now more appropriately addressed through its regulatory surveillance program, and SEC rules and reporting requirements.

8. The Corporation will not select any of its securities listed on the Exchange

for redemption otherwise than by lot or pro rata, and will not set a redemption date earlier than fifteen days after the date corporate action is taken to authorize the redemption.

• See response for same provision in Section I.9 of the listing agreement for domestic companies.

9. The Corporation will promptly notify the Exchange of any corporate action which will result in the redemption or retirement, in whole or in part, of any of its bonds listed on the Exchange, and will notify the Exchange as soon as the Corporation has notice of any other action which will result in any such redemption or retirement.

• The Exchange proposes to delete this requirement as it is duplicative of Section 204.22 of the Manual.

10. The Corporation will promptly notify the Exchange of action taken to fix a stockholders' record date, or to close the transfer books, for any purpose and will take such action at such time as will permit giving the Exchange at least ten days' notice in advance of such record date or closing of the books.

• See response for same provision in Section I.11 of the listing agreement for domestic companies.

11. In case the securities to be listed are in temporary form, the Corporation agrees to order permanent engraved securities within thirty days after the date of listing.

• See response for same provision in Section I.12 of the listing agreement for domestic companies.

12. The Corporation will furnish to the Exchange on demand such information concerning the Corporation as the Exchange may reasonably require.

• See response for same provision in Section I.13 of the listing agreement for domestic companies.

13. The Corporation will not make any changes in the form or nature of any of its bonds listed on the Exchange, nor in the rights or privileges of the holders thereof, without having given twenty days' prior notice to the Exchange of the proposed change, and having made application for the listing of the bonds as changed if the Exchange shall so require.

• The Exchange proposes to delete this requirement as it is duplicative of Section 204.13 of the Manual.

14. The Corporation will promptly notify the Exchange of any diminution in the supply of _____ available for the market occasioned by the deposit of such _____ under voting trust agreements or other deposit agreements, if knowledge of any such actual or proposed deposits should come to the official attention of the officers or directors of the Corporation.

• The Exchange proposes to delete this provision as it is duplicative of Section 204.09 of the Manual.

15. The Corporation will make application to the Exchange for the listing of additional amounts of securities listed on the Exchange sufficiently prior to the issuance thereof to permit action in due course upon such application.

• See response for same provision in Section I.17 of the listing agreement for domestic companies.

Section II

1. The Corporation will publish at least once a year and submit to the record holders of _____ (hereinafter called the ''Holders''), at least fifteen days in advance of the annual meeting of stockholders and not later than three months after the close of the last preceding fiscal year of the Corporation a balance sheet as of the end of such fiscal year, and a surplus and income statement for such fiscal year of the Corporation as a separate corporate entity and of each corporation in which it holds directly or indirectly a majority of the equity stock; or in lieu thereof, eliminating all inter-company transactions, a consolidated balance sheet of the Corporation and its subsidiaries as of the end of its last previous fiscal year, and a consolidated surplus statement and a consolidated income statement of the Corporation and its subsidiaries for such fiscal year. If any such consolidated statement shall exclude corporations a majority of whose equity stock is owned directly or indirectly by the Corporation: (a) The caption of, or a note to, such statement will show the degree of consolidation; (b) the consolidated income account will reflect, either in a footnote or otherwise, the parent company's proportion of the sum of, or difference between, current earnings or losses and the dividends of such unconsolidated subsidiaries for the period of the report; and (c) the consolidated balance sheet will reflect, either in a footnote or otherwise, the extent to which the equity of the parent company in such subsidiaries has been increased or diminished since the date of acquisition as a result of profits, losses and distributions.

Appropriate reserves, in accordance with good accounting practice, will be made against profits arising out of all transactions with unconsolidated subsidiaries in either parent company statements or consolidated statements.

Such statements will reflect the existence of any default in interest, cumulative dividend requirements, sinking fund or redemption fund requirements of the Corporation and of any controlled corporation, whether consolidated or unconsolidated.

• The Exchange proposes to delete this provision, as it is duplicative of SEC rules requiring the annual filing of financial statements as part of the company's annual report on Form 10–K, 20–F, 40–F or NCSR filed with the SEC. The Exchange also notes that Section 203.01 of the Manual requires listed companies that are required to file with the SEC an annual report including audited financial statements (i.e., an annual report on Form 10–K, 20–F, 40–F or NCSR) to simultaneously make such annual report available on or through the company's Web site and to undertake to provide, upon request, a hard copy of its audited financial statements free of charge. The Exchange also notes that Section 802.01E of the Manual requires the delisting of any listed Company that fails to file its annual report within a compliance period determined by the Exchange, but in no event longer than 12 months from the original filing due date.

2. All financial statements contained in annual reports of the Corporation to Holders will be audited by independent public accountants qualified under the laws of _____, and will be accompanied by a copy of the certificate made by such firm with respect to its audit of such statements showing the scope of such audit and the qualifications, if any, with respect thereto.

The Corporation will promptly notify the Exchange if it changes its independent public accountants regularly auditing the books and accounts of the Corporation.

• See response for same provision in Section I.1 of the listing agreement for domestic companies.

3. All financial statements contained in annual reports of the Corporation to Holders shall be in the same form as the corresponding statements contained in the listing application in connection with which this Listing Agreement is made, and shall disclose any substantial items of unusual or non-recurrent nature.

• The Exchange proposes to delete this requirement, as the form of companies' annual financial statements is dictated by the SEC's Form 20–F requirements rather than Exchange rules. The Exchange notes that an identical provision was previously deleted from Section 203.01 of the Manual.

4. The Corporation will publish quarterly statements of earnings on the basis of the same degree of consolidation as in the annual report to Holders. Such statements will disclose

any substantial items of unusual or non-recurrent nature and will show either net income before and after income taxes or net income and the amount of income taxes.

• The Exchange proposes to delete this provision as it is inconsistent with Section 103.00 of the Manual, which permits foreign private issuers to provide interim earnings reports on a basis consistent with the company's home country laws and practice.

5. The Corporation will not make any substantial charges, nor will it permit any subsidiary directly or indirectly controlled by it to make any substantial charges, against capital surplus without notifying the Exchange. If so requested by the Exchange, the Corporation will submit such charges to stockholders for approval or ratification.

• The Exchange proposes to delete this requirement as it is duplicative of Section 204.05 of the Manual.

6. The Corporation will not make any substantial change, nor will it permit any subsidiary directly or indirectly controlled by it to make any substantial change, in accounting methods, in policies as to depreciation and depletion or in bases of valuation of inventories or other assets, without notifying the Exchange and disclosing the effect of any such change in its next succeeding interim and annual report to its Holders.

• The Exchange proposes to delete this requirement, as foreign private issuers are required by SEC rules to disclose in their annual reports on Form 20–F any changes in accounting methods and their effect on the company's financial statements.

Section III

1. The Corporation will ensure that _____ (hereinafter called the ''Depositary''), as Depositary under the Deposit Agreement, dated as of _____ (hereinafter called the ''Deposit Agreement''), and any succeeding or additional depositary, will have on hand at all times a sufficient supply of _____ to meet the demands for transfer. If at any time the Corporation issues securities which do not recite the preferences of all classes of its stock, the Corporation will furnish the Depositary with the information necessary to furnish Holders, upon request and without charge, a printed copy of preferences of all classes of such stock.

• See response for related provision in Section III.3 of the listing agreement for domestic companies.

2. The Corporation will immediately publish to its stockholders and enable the Depositary to publish to Holders any action taken by the Corporation with respect to dividends or to the allotment of rights to subscribe or to any rights or benefits pertaining to the ownership of its _____ listed on the Exchange; and will give prompt notice to the Exchange of any such action; and will afford its stockholders a proper period within which to record their interests and to exercise their rights. The Corporation will also take such steps as may be necessary to enable the Depositary, in accordance with the terms of the Deposit Agreement, to (a) make all such rights or benefits available to Holders; (b) provide Holders a proper period within which to record their interests and to exercise their rights; and (c) issue all such rights or benefits in form approved by the Exchange.

• Section 202.05 of the Manual requires a listed company to release quickly to the public any news or information which might reasonably be expected to materially affect the market for its securities. Section 202.06 specifies that, while foreign private issuers are not required to comply with Regulation FD, foreign private issuers must comply with the timely alert policy set forth in Section 202.05 and may do so by any method (or combination of methods) that would constitute compliance with Regulation FD for a U.S. issuer. Section 202.06 of the Manual specifies that information that should be published immediately would include dividend announcements, tender offers and stock splits. In addition, the material news events listed in Section 202.06 are intended to be illustrative rather than a complete list of instances where a news release is required. It is the Exchange's position that any corporate action that represents a material benefit to the company's shareholders should be publicized as required by Section 202.06. The Exchange proposes to delete this requirement as the Exchange's requirements with respect to dividends and other rights are set forth in Section 204.12 of the Manual.

3. The Corporation will solicit proxies for all meetings of stockholders.

• See response for same provision in Section III.5 of the listing agreement for domestic companies.

4. In the event that a successor Depositary or an additional Depositary is named, the Corporation agrees that it will not appoint any person as such successor Depositary or additional Depositary unless such person shall have entered into a listing agreement with the Exchange in a form substantially similar to the agreement relating to _____ between _____. and the Exchange. The Corporation will not appoint a transfer agent, registrar or depositary of, nor a trustee under a mortgage or other instrument relating to any security listed on the Exchange without prior notice to the Exchange, and the Corporation will not appoint a registrar for the _____ listed on the Exchange unless such registrar, at the time of its appointment becoming effective, is qualified with the Exchange as a registrar for securities listed on the Exchange; nor will the Corporation select an officer or director of the Corporation as a trustee under a mortgage or other instrument relating to a security of the Corporation listed on the Exchange.

• The Exchange proposes to retain this provision insofar as it relates to the requirement that any successor or additional depositary must enter into an agreement with the Exchange. The Exchange proposes to delete the rest of this provision, because the requirements with respect to the appointment of transfer agents and registrars are set forth in Section 601.01 of the Manual and the requirements with respect to trustees are set forth in Section 603.01–603.04 of the Manual.

Amended Listing Agreement for Foreign Private Issuers

The following are the requirements that would be set forth in the proposed amended listing agreement for foreign private issuers:

1. The applicant certifies that it understands and agrees to comply with all current and future rules, listing standards, procedures and policies of the Exchange as they may be amended from time to time.

2. The applicant agrees to promptly notify the Exchange in writing of any corporate action or other event which will cause the applicant to cease to be in compliance with Exchange listing requirements.

3. The applicant understands that the Exchange may remove its securities from listing and trading on the Exchange, pursuant to applicable procedures, if it fails to meet one or more requirements of Paragraphs 1–2.

4. The applicant understands that if an exception to any of the provisions of any of the Exchange rules has been granted by the Exchange, such exception shall, during the time it is in effect, supersede any conflicting provision of the listing agreement.

5. The applicant agrees to list on the Exchange all subsequent amounts of the securit(y/ies) to be listed which may be issued or authorized for issuance.

6. The applicant agrees to furnish to the Exchange on demand such

information concerning the applicant as the Exchange may reasonably request.

7. For purposes of publicity related to the applicant's listing on the Exchange, the applicant authorizes the Exchange to use the applicant's corporate logos, Web site address, trade names, and trade/service marks in order to convey quotation information, transactional reporting information and any other information related to the applicant's listing on the Exchange.

8. The applicant indemnifies the Exchange and holds it harmless from any third-party rights and/or claims arising out of the Exchange's or any of its affiliates' use of the applicant's corporate logos, Web site address, trade names, trade/service marks and/or the trading symbol used by the applicant.

9. The applicant will maintain a transfer agent and a registrar, as necessary, which satisfy the applicable requirements set forth in Section 601.00 *et seq.* of the Manual.

10. The applicant agrees to pay, when due, all fees associated with its listing of securities on the Exchange, in accordance with the Exchange's rules.

11. The applicant agrees to file all required periodic financial reports with the SEC, including annual reports and, where applicable, quarterly or semi-annual reports by the due dates established by the SEC.

12. The applicant agrees to comply with all requirements under the federal securities laws and applicable SEC rules.

13. The applicant agrees to solicit proxies from U.S. holders for all meetings of stockholders.

14. Nothing contained in or inferred from the listing agreement shall be construed as constituting the applicant's contract for the continued listing of the applicant's securities on the Exchange. The applicant understands that the Exchange may, consistent with applicable laws and SEC rules, suspend its securities with or without prior notice to the applicant, upon failure of the applicant to comply with any one or more sections of the listing agreement, or when, in its sole discretion, the Exchange shall determine that such suspension of dealings is in the public interest or otherwise warranted.

15. In the event that a successor Depositary or an additional Depositary is named, the Corporation agrees that it will not appoint any person as such successor Depositary or additional Depositary unless such person shall have entered into a listing agreement with the Exchange in a form substantially similar to the agreement relating to _____ between _____ and the Exchange.

IV. Listing Application

As noted in Part I, above, the Exchange proposes to delete from the Manual the form of original listing application contained in Section 903.01 thereof (the ''Current Application''). The revised form of original listing application, included in Exhibit 3 hereto (the ''Revised Application''), will be provided on the Exchange's Web site. The following sets forth the information requirements included in the Current Application [15] and states whether each requirement will be included in the Revised Application. Where a requirement is proposed to be deleted, an explanation is provided.

In most cases, the Exchange proposes to delete the information requirements of the Current Application, as such information is available in the applicant's filings with the SEC made pursuant to the Exchange Act or the Securities Act of 1933 (the ''Securities Act'').[16] The Current Application has been in use for many years, and during that time disclosure requirements for Exchange Act and Securities Act filings have dramatically increased, significantly reducing the benefit of many of the information requirements included in the Current Application and rendering many of them redundant. Where information required by the Current Application is not specifically required by parallel disclosure requirements under the securities laws, the Exchange has reviewed the totality of the information required and assessed whether the information required by the Current Application provides any substantial assistance in determining the issuer's suitability for listing.

The provisions of the Current Application are in italics [sic] below. For ease of reference, the provisions have been numbered.

1. Description of Transaction—

State that the listing application is the company's original application for the listing of its securities on the Exchange.

• The Revised Application states that it is the original listing application and requires an attestation by an authorized executive officer.

2. Shares Applied for but Not Yet Issued—

The transactions for which share reserves are needed should be described in sufficient detail to set forth the essential facts.

• The Exchange proposes to delete this requirement as it is duplicative of Items 201(a)(2), 201(d) and 202(c) of Regulation S–K and Item 10(A) of Form 20–F. In addition, the Revised Application requires that the applicant specify the number, date of authorization, and purpose of shares unissued but authorized for issuance.

3. Authority for Issuance—

Give the dates directors approved the purpose for and issuance of any unissued securities covered by the application. If shareholder approval has been, or will be given, give that date also.

• The Revised Application requires that the applicant specify the number, date of authorization, and purpose of shares unissued but authorized for issuance. In addition, applicants are required to provide copies of board and shareholder resolutions authorizing issuance with respect to any unissued securities for which a listing application is made, where applicable.

4. History and Business—

State where and when the company was organized, its form of organization, and the duration of its charter. Give in succinct form the history of its development and growth in the particular line of business now conducted. If organized as the result of merger, consolidation, or reorganization, trace the history of the predecessor companies. If organized through reorganization, describe briefly the circumstances leading to, and the effect of, the reorganization.

Describe briefly the present business of the company and its subsidiaries or controlled companies, including principal products manufactured or services performed, principal markets for products and raw materials, operations conducted, merchandising or product-distribution methods, and, in general, furnish such information as will serve to indicate clearly the growth and development of the particular

[15] Instructions included in the Current Application have been omitted.

[16] 15 U.S.C. 77a. When listing a company in connection with its initial public offering or other securities offering, the Exchange relies on the company's Securities Act prospectus that registered the transaction. Generally, the forms used are Form S–1 (for a domestic issuer), Form F–1 (for a foreign private issuer), Form S–11 (for a real estate investment trust or ''REIT'') and Form N–2 (for closed-end funds). When listing a company transferring from another exchange or whose common stock was previously publicly traded on the over-the-counter market, the Exchange typically relies on the company's annual report filed with the SEC on Form 10–K (in the case of a domestic issuer) or Form 20–F (in the case of a foreign private issuer). When listing a company in connection with a spin-off, the Exchange typically relies on the company's Form 10, and, when listing a company in connection with a merger transaction, the Exchange typically relies on a Form S–4. For purposes of this rule filing, the Exchange focused on the requirements of Regulation S–K and Form 20–F. However, the Exchange reviewed the totality of the information required in all of the aforementioned forms in its assessment whether disclosure is adequate and a particular requirement can be deleted from the Current Application.

industry in which the company is engaged and the growth and development of the company and the relative ranking it occupies in its field.

If a material part of the business is dependent upon patents, proprietary formulae, or secret processes, so state. Give date of expiration of principal patents or proprietary interests in principal formulae.

• The Exchange proposes to delete this requirement as it is duplicative of Items 101(a), 101(c) and 101(h) of Regulation S–K and Item 4 of Form 20–F,[17] with the exception of the duration of the charter, which is required to be filed with the SEC pursuant to Item 601(b)(3)(i) of Regulation S–K.

5. Public Utilities—

In the case of public utilities, the description of the business should include the various services rendered by the system, the proportionate gross revenue derived from each service, and the territory and population served by each service.

Indicate the number of customers, or meters in service, classifying them into categories such as residential, industrial or commercial, municipalities, etc.

State the aggregate number of kilowatt-hours of electricity, or cubic feet of gas, sold annually for the past five years, and the aggregate revenue derived from each service annually during that period, for each customer classification.

State average and peak loads and installed capacity, indicating whether the figures given represent rated capacity or actual capacity.

Describe, in general terms, interconnection facilities and arrangements for purchases or sales of electricity and gas.

• The Exchange proposes to delete this requirement as it is duplicative of the general disclosure requirements of Items 101 and 303 of Regulation S–K and Item 4 of Form 20–F. While those provisions do not have specific disclosure requirements for electric and gas utilities, the Exchange notes that in 1996, as part of its regulatory simplification effort, the SEC eliminated Industry Guide 1, which had set forth specific disclosure requirements for electric and gas utilities, on the basis that ''the information requested by the Guide also is within the coverage of other rules of the SEC, including Items 101 and 303 of Regulation S–K.'' [18]

6. Property Description—

Describe briefly the physical properties of the company and its subsidiaries or controlled companies, stating location, type of construction and area of plants and buildings, functions thereof, condition of equipment, acreage, transportation facilities, etc. State whether properties are owned or leased. Indicate normal capacity of plants in terms of units of production where possible.

• The Exchange proposes to delete this requirement as it is duplicative of Item 102 of Regulation S–K and Item 4(D) of Form 20–F, with the exception that such provisions do not specifically require disclosure of some details listed in the Current Application, namely the type of construction and area of plants and buildings and functions thereof, condition of equipment, acreage, and transportation facilities. However, Instruction 1 to Item 102 of Regulation S–K requires inclusion of such information as reasonably will inform investors as to the suitability, adequacy, productive capacity and extent of utilization of the facilities by the company.[19]

Affiliated Companies—

a. Give a list of all subsidiary or controlled companies, including all companies in which the company owns or controls directly or indirectly 50% or more of the voting power. Indicate, as to each such company, the amount of each class of capital stock outstanding and show the amount of each class owned, directly or indirectly, by the parent company. State briefly the proportionate revenue/earnings each such company has in the business.

• The Exchange proposes to delete this requirement as it is duplicative of Item 601(b)(21) of Regulation S–K and Item 4(C) of Form 20–F, with the exception that such provisions do not require disclosure of (i) subsidiaries that are not significant (or, in the case of Item 601(b)(21) of Regulation S–K, that are not in the aggregate significant) or (ii) the amount of each class of capital stock outstanding for each company or the proportionate revenue/earnings that each subsidiary has in the business. The Exchange believes that the disclosures required under the federal securities laws are adequate for purposes of determining an issuer's suitability for listing, because, unless such details were required to be disclosed under Securities Act Rule 408 or Exchange Act Rule 12b–20, as applicable, they would not be material to the Exchange's determination. The disclosure regarding an applicant's business segments (as defined by applicable accounting standards) is more meaningful in such analysis, which is consistent with current disclosure requirements under the federal securities laws.[20]

b. If the company has a substantial, but less than controlling, interest in any company or organization, such interests should be similarly described.

• Item 601(b)(21) of Regulation S–K and Item 4(C) of Form 20–F require disclosure regarding subsidiaries as defined by Securities Act Rule 405 [21] and Exchange Act Rule 12b–2,[22] which define a subsidiary ''of a specified person'' as ''an affiliate controlled by such person directly, or indirectly through one or more intermediaries.'' As such definition is substantially broader than the Current Application's control threshold of 50% or more of voting power, Item 601(b)(21) of Regulation S–K and Item 4(C) of Form 20–F include both subsidiaries that meet the 50% threshold requirement and the ''substantial, but less than controlling'' additional requirement.

c. Indicate, to the extent that the information is available, the name of any company, individual, or other entity which owns directly or indirectly, 10% or more of any class of voting stock of the company, and the extent of such ownership.

• The Exchange proposes to delete this requirement as it is duplicative of Item 403 of Regulation S–K and Item 7(A) of Form 20–F.

d. If control of the company is held by any other company through lease or contract, describe the circumstances of such control.

• The Exchange proposes to delete this requirement as it is duplicative of the general disclosure requirements of Item 101 of Regulation S–K and Items 4 and 10(C) of Form 20–F, in that if the applicant is held by another company through lease or contract, such information would be material and therefore subject to disclosure. Further, to the extent that the control of the company is held through written contract, such contract would be material and therefore subject to filing under Items 601(b)(2) or 601(b)(10) of Regulation S–K.

7. Management—

[17] Item 4 of Form 20–F requires information on the company on a consolidated basis.

[18] Securities Act Release No. 33–7300 (May 31, 1996), 61 FR 30397 (June 14, 1996).

[19] In addition, such information would be required to be disclosed pursuant to Securities Act Rule 408 (17 CFR 230.408) or Exchange Act Rule 12b–20 (17 CFR 240.12b–20), as applicable, if it were material information necessary to make the required statements, in the light of the circumstances under which they were made, not misleading.

[20] Item 101(b) and 101(c) of Regulation S–K and Item 5 of Form 20–F require disclosure based on segments. *See also* Financial Accounting Standards Board (''FASB'') Accounting Standards Codification (''ASC'') 280–10.

[21] 17 CFR 230.405.

[22] 17 CFR 240.12b–2.

Give the names and titles of all directors and officers, stating other principal business affiliations they may have. Give a brief biographical outline for each of the principal officers of the company. If directors are elected by classes, so indicate.

• The Exchange proposes to delete this requirement as it is duplicative of Item 401 of Regulation S–K and Items 6(A) and 6(C) of Form 20–F.

8. Capitalization—

Give a summary statement of changes in authorized stock capitalization of the company since organization, with reference to dates of corporate actions effecting such changes. This data may be given in narrative form if desired, but if changes have been numerous, a tabulated statement is preferable.

Give in tabular form a statement as to substantial changes in the outstanding amounts of stock of the company over the period of the past five years, showing dates on which authorized for issuance, purpose of issuance and consideration received. The statement should show shares reacquired by the company or its subsidiary or controlled companies.

• The Exchange proposes to delete this requirement as it is duplicative of (i) Item 701 of Regulation S–K, with respect to securities sold by the applicant within the past three years which were not registered under the Securities Act, and (ii) the relevant registration statement, with respect to securities that were registered. This requirement is also duplicative of Item 10(A) of Form 20–F with respect to changes in the outstanding amounts of stock of the company within the past three years. In addition, Item 3(B) of Form 20–F requires inclusion of a capitalization table, and many other registrants voluntarily include a capitalization table in their registration statements. In the absence of a capitalization table, information is available in the financial statements.[23]

The Exchange notes that Item 701 of Regulation S–K requires information for three years, as opposed to the longer periods required by the Current Application. However, consistent with the disclosure requirements under the federal securities laws, none of the Exchange's initial listings are based on more than three years of historical financial data. The Exchange also notes that Item 701 does not require information on when stock was authorized for issuance or the purpose of issuance. However, the Exchange finds that the totality of the information provided under Item 701, which includes the date of sale, persons or class of persons to whom the securities were sold, and the exemption from registration claimed, is more than adequate for purposes of determining whether an issuer's securities outstanding prior to listing were issued in compliance with applicable law.

9. Funded Debt—

State the aggregate amount of funded debt of the company and subsidiary or controlled companies, and give a list of the outstanding issues and amounts, indicating amounts held by subsidiary or controlled companies. If such list is extensive, it may be attached to the application as an exhibit.

• The Exchange proposes to delete this requirement as it is duplicative of Item 303(a)(5) of Regulation S–K and Item 5(F) of Form 20–F, which require tabular disclosure on a consolidated basis of contractual obligations, including long-term debt obligations, with the exception that the tables are on a consolidated basis. The Exchange finds the required information adequate since unless separate disclosure for subsidiaries or controlled companies were required to be disclosed under Securities Act Rule 408 or Exchange Act Rule 12b–20, as applicable, it would not be material to its determination as to an issuer's suitability for listing.

10. Stock Provisions—

a. If application is being made to list stock, give a summary of the rights, preferences, privileges and priorities of the class of stock for which application is made. Provide similar information on any other class of stock which is senior or equal to the proposed issue.

• The Exchange proposes to delete this requirement as it is duplicative of Item 202 of Regulation S–K, with the exception that such provisions do not require similar information on any class of stock which is senior or equal to the proposed issue. However, they do require disclosure regarding any other authorized class of securities if the rights evidenced by the shares to be registered are, or may be, materially limited or qualified by the rights of any such other authorized class of securities. This requirement is also duplicative of Item 10(B)(3) of Form 20–F, which requires a description of the rights, preferences and restrictions attaching to each class of shares. In addition, the Revised Application requires a complete description of any existing class of common stock or equity security entitling the holder(s) to differential voting rights, dividend payments, or other preferences. The Exchange believes that the disclosure required under Item 202 of Regulation S–K, Item 10(B)(3) of Form 20–F and the Revised Application is more informative than the request for information in the Current Application, and therefore adequate for purposes of determining whether an issuer's equity securities are suitable for listing.

b. If application is being made to list one or more senior classes of stock, recite verbatim the charter provisions attaching thereto, and to each class on a parity therewith or senior thereto, in an exhibit appended to the application in addition to the summarized statement included in the application.

c. Give a summary statement of any provisions of any indentures or agreements restricting payment of dividends or affecting voting rights of the class of stock applied for.

State whether or not shareholders of any class have preemptive rights to subscribe to additional issues, whether by charter provision or statute.

• The Exchange proposes to delete this requirement as it is duplicative of Items 202, 601(b)(3)(i) and 601(b)(4) of Regulation S–K and Item 10(B)(3) of Form 20–F, with the exception that such provisions do not require that the charter provisions of senior stock be recited verbatim. However, they do require a summary of the relevant provisions, and Items 601(b)(3)(i) and 601(b)(4) of Regulation S–K require companies to file their charter and any instruments defining the rights of security holders, including indentures. In addition, the Revised Application requires a complete description of any existing class of common stock or equity security entitling the holder(s) thereof to differential voting rights, dividend payments, or other preferences. The Exchange believes that the disclosure required under Items 202, 601(b)(3)(i) and 601(b)(4) of Regulation S–K, Item 10(B)(3) of Form 20–F and the Revised Application are adequate for purposes of determining whether a class of equity securities is suitable for listing.

11. Employees-Labor Relations—

a. State total number regularly employed and, if subject to seasonal fluctuation, the maximum and minimum numbers employed during the preceding twelve months.

• The Exchange proposes to delete this requirement as it is duplicative of Item 101(c)(1) of Regulation S–K and Item 6(D) of Form 20–F, with the exception that such provisions do not require disclosure of maximum and minimum numbers employed. However,

[23] *See* Securities Act Release No. 33–6331 (August 5, 1981) (''[a]n item requiring a table of capital structure has not been included in . . . Regulation S–K. The commentators . . . generally agreed with the Commission that a requirement for such a table is unnecessary because information presented therein is readily apparent from other sources such as the financial statement.'')

the Exchange finds the required information adequate since disclosure of maximum and minimum numbers employed would not be material to the Exchange's determination of whether an issuer was suitable for listing.

b. State dates and duration of material work stoppages due to labor disagreements during the past three years, and the general terms of settlement of such disagreements.

• The Exchange proposes to delete this requirement as it is duplicative of the general disclosure requirements in Item 101 of Regulation S–K and of Item 6(D) of Form 20–F, with the exception that such provisions do not specifically require disclosure regarding work stoppages. However, Item 6(D) requires information regarding the relationship between management and labor unions. The Exchange believes that disclosures required under the federal securities laws are sufficient because unless information regarding work stoppages was required to be disclosed under Securities Act Rule 408 or Exchange Act Rule 12b–20, as applicable, it would not be material to the Exchange's determination of whether an issuer was suitable for listing.

c. Describe briefly any pension, retirement, bonus, profit participation, stock purchase, insurance, hospitalization, or other plans of benefit to employees which may be in effect.

• The Exchange proposes to delete this requirement as it is duplicative of the disclosure requirements in Items 402, 201(d) and 601(b)(10) of Regulation S–K and in Item 6(B) of Form 20–F. The requirements in Item 402 of Regulation S–K and Item 6(B) of Form 20–F are limited to plans of benefit that apply to certain directors and officers. However, Item 201(d) of Regulation S–K requires tabular disclosure of any securities authorized for issuance under equity compensation plans to any persons employed by the company, not just executive officers, and unless the plan was approved by shareholders, a summary of the terms of the plan, and Item 601(b)(10) requires that any compensatory plan, contract or arrangement adopted without the approval of security holders must be filed with the SEC. The Exchange believes that, taken as a whole, the disclosure and documentation provided under these items is sufficient for purposes of determining whether an issuer is suitable for listing.

12. Shareholder Relations—

Describe briefly the procedures followed by the company in the field of shareholder relations, indicating, among other things, the method by which shareholders are informed of either a declaration of dividends or a failure to declare a dividend at an accustomed time; whether interim statements of earnings are mailed to shareholders or released to the press; how soon after the close of the period such interim statements usually are available; whether the company advises shareholders or otherwise gives periodic publicity to the progress of the company or new developments in its affairs (otherwise than through interim statements of earnings or annual reports and proxy statements).

• The Exchange proposes to delete this requirement as the requirements for declaring dividends, issuing interim statements of earnings, and making periodic disclosure are set out in Sections 202.05, 203.02 and 204.12 of the Manual.

13. Dividend Record—

State the amount of dividends (per share and in aggregate) paid by the company (or its predecessors) during each of the five preceding years. Show stock dividends separately, indicating, in respect of each stock dividend, the percentage amount, the number of shares issued in payment, the amount per dividend share and the aggregate charged against earnings or retained earnings, and the basis for calculating the amount charged.

State the aggregate and per share amount of preferred dividend arrearages.

Indicate whether dividends have been paid on a quarterly, semi-annual or annual basis, and state how long dividends have been paid without interruption.

State the record date, payment date and date of declaration with respect to each dividend paid during the past two years.

• Item 201(c) of Regulation S–K requires issuers to state the frequency and amount of any cash dividends declared on each class of its common equity by the registrant for the two most recent fiscal years and any subsequent interim period for which financial statements are required to be presented by Article 3 of Regulation S–X. After listing, a company is subject to Sections 204.12 and 204.21 of the Manual, which require companies to give the Exchange at least 10 days advance notice of the setting of the record date for any dividend or other distribution. The audited financial statements included in a company's SEC filings would include information about accrued and unpaid preferred stock dividends, as well as any stock dividends paid during the period covered by the financial statements. The Exchange believes that, taken as a whole, the disclosure provided under these items is sufficient for purposes of determining whether an issuer is suitable for listing.

14. Option, Warrants, Conversion Rights, Etc.—

a. State the terms and conditions of any options, purchase warrants, conversion rights or any other commitments, whether of definitive or contingent nature (including stock compensation or remuneration plans), under which the company may be required to issue any of its securities. If there are no such commitments, so state.

• The Exchange proposes to delete this requirement as it is duplicative of the disclosure requirements in Items 402, 201(a)(2)(i), 201(d), 202(c) and 601(b)(10) of Regulation S–K and of Item 10(A) of Form 20–F. Disclosure under Item 402 of Regulation S–K is limited to plans of benefit that apply to certain directors and officers. However, Item 201(d) of Regulation S–K requires tabular disclosure of any securities authorized for issuance under equity compensation plans to any persons employed by the company, not just executive officers, and unless the plan was approved by shareholders, a summary of the terms of the plan. Additionally, Item 601(b)(10) requires that any compensatory plan, contract or arrangement adopted without the approval of security holders must be filed with the SEC. Items 201(a)(2)(i) and 202(c) of Regulation S–K require disclosure of all outstanding options and warrants, whether or not issued under a compensation plan, relating to the class of securities being offered. The Exchange believes that, taken as a whole, the disclosure and documentation provided under these items is sufficient for purposes of determining whether an issuer is suitable for listing.

b. In the case of options granted to directors, officers or employees, and in the case of stock compensation or remuneration plans relating to directors, officers or employees, indicate whether or not the options or plans, or some measure or proposal implementing them, were approved by shareholders, and if so approved, the date of approval.

• The Exchange proposes to delete this requirement as it is duplicative of Items 201(d) and 601(b)(10) of Regulation S–K and Items 6(B) and 10(A)(7) of Form 20–F, with the exception that such provisions do not require disclosure of the date of approval. The Exchange believes that, taken as a whole, the disclosure provided under these items is sufficient for purposes of determining whether an issuer is suitable for listing.

15. Litigation—

Describe all pending litigation of a material nature in which the company, or any of its subsidiaries or controlled companies, may be involved which may affect its income from, title to, or possession of any of its properties.

• The Exchange proposes to delete this requirement as it is duplicative of Item 103 of Regulation S–K and Item 8(A)(7) of Form 20–F.

16. Business, Financial and Accounting Policies—

a. Independent Public Accountants—State the name of independent public accountants; how long they have audited the company's accounts; when and by whom they were appointed; whether or not they report directly to the Board of Directors; whether they make a continuous or periodic audit; extent of their authority to examine all records and supporting evidence;

• The Exchange proposes to delete this requirement as it is duplicative of Rule 2–02 of Regulation S–X and Exchange Act Rule 10A, with the exception that such provisions do not require disclosure of the how long the public accountants have audited the company's accounts, whether their audit is continuous or periodic, or the extent of their authority. The Exchange believes that, taken as a whole, the disclosure provided under these items is adequate for purposes of determining the reliability of the audited financial statements relied upon in determining the issuer's qualification for listing.

whether or not they are authorized or invited to attend shareholders' meetings; whether they do attend such meetings; and, if they do attend, whether or not they are authorized to answer questions raised by shareholders.

• The Exchange proposes to delete this requirement as it is duplicative of Item 9 of Schedule 14A of the Commission's proxy rules.

b. Chief Executive Officer—State the name and title of the chief executive officer.

• The name and title of the issuer's chief executive officer will continue to be a requirement in the Revised Application.

c. Chief Financial Officer—State the name and title of the company's chief financial officer; to whom he reports and the extent of his authority; whether or not he attends meetings of the Board of Directors.

• The Exchange proposes to delete this requirement as it is duplicative of Item 401(b) of Regulation S–K and Item 6(A) of Form 20–F, with the exception that such provisions do not require disclosure of to whom the chief financial officer reports or whether he or she attends meetings of the Board of Directors.

d. Commitments— Indicate whether or not it is policy of the company to make future commodity commitments to an extent which may materially affect its financial position.

• The Exchange proposes to delete this requirement as it is duplicative of Item 305(b) of Regulation S–K and Item 11(a) of Form 20–F, as well as the general disclosure requirement of Item 503(c) of Regulation S–K.

e. Indicate whether or not, in the normal course of business, it is necessary to expand working capital through short term loans (or otherwise) to a material extent.

• The Exchange proposes to delete this requirement as it is duplicative of Item 303(a)(1) of Regulation S–K and Item 5(B) of Form 20–F. The information may also in some circumstances be required by Item 101(c) of Regulation S–K.

f. Other Policies— In cases where, because of the nature of the industry or circumstances peculiar to the company, unique business, financial or accounting policies are considered to be of material effect in determination of the company's income or its financial position, or in interpretation of its financial statements, describe such other policies.

• The Exchange proposes to delete this requirement as it is duplicative of Items 101 and 303 of Regulation S–K, Items 4 and 5 of Form 20–F and FASB ASC 235–10.[24] While these provisions do not specifically require disclosure of unique business or financial policies that are considered to be of material effect in determining an applicant's income or financial position, the Exchange finds the required information adequate because, unless such policies were required to be disclosed under Securities Act Rule 408 or Exchange Act Rule 12b–20, as applicable, they would not be meaningful in the Exchange's analysis of whether a proposed issuance complies with the Exchange's listing requirements.

17. Financial Statements—

Include in the listing application the following financial statements

A summary statement of earnings, prepared in conformity with generally accepted accounting principles, for the last five fiscal years.

• The Exchange proposes to delete this requirement as it is duplicative of Item 301 of Regulation S–K and Item 3(A) of Form 20–F.

Consolidated financial statements, prepared in conformity with generally accepted accounting principles, together with the report of the company's independent public accountants.

• The Exchange proposes to delete this requirement as it is duplicative of Article 3 and Rule 2–02 of Regulation S–X and Item 8(A) of Form 20–F.

Latest available interim financial statements for the current fiscal year, prepared in conformity with generally accepted accounting principles. The interim statements shall include a report thereon by the company's chief financial officer if such statements have not been audited.

• The Exchange proposes to delete this requirement as it is duplicative of Article 3 and Rules 2–02 and 10–01 of Regulation S–X and Item 8(A)(5) of Form 20–F, with the exception that such provisions do not require that the company's chief financial officer provide a report on the interim financial statements. However, the signature of the principal financial officer is required by Forms S–1 and F–1 and also by Form 10–Q, the form on which U.S. companies that are Exchange Act registrants report their quarterly financial information.

Pro forma or ''giving effect'' consolidated financial statements in cases where there has been, or is contemplated, any major financing, recapitalization, acquisition or reorganization.

• The Exchange proposes to delete this requirement as it is duplicative of Article 11 of Regulation S–X.

Parent Company Statements—Statements of the parent company as a separate corporate entity may also be required if such statements appear essential or desirable. In general, parent company statements are not required in cases where the subsidiaries are wholly owned and do not have any substantial amount of funded debt outstanding.

• The Exchange proposes to delete this requirement as it is duplicative of Rules 5–04(c) and 12–04 of Regulation S–X.

[24] *See* FASB ASC 235–10–50–3 (requiring that the financial statements ''identify and describe the accounting principles followed by the entity and the methods of applying those principles that materially affect the determination of financial position, cash flows, or results of operations.'') *See also* Securities Act Release No. 33–8350 (December 29, 2003) (''[w]hen preparing disclosure under the current requirements [of Item 303], companies should consider whether they have made accounting estimates or assumptions where: the nature of the estimates or assumptions is material due to the levels of subjectivity and judgment necessary to account for highly uncertain matters or the susceptibility of such matters to change; and the impact of the estimates and assumptions on financial condition or operating performance is material. If so, companies should provide disclosure about those critical accounting estimates or assumptions in their MD&A.'')

V. Form of Transfer Agent Agreements

As noted in Part I, above, the Exchange proposes to delete from the Manual the forms of transfer agent and registrar agreements currently set forth in Sections 906.01, 906.02 and 906.03 of the Manual. In both of its revised listing agreements, the Exchange has included an explicit agreement by the applicant issuer to abide by the transfer agent and registrar requirements set forth in Section 601.00 of the Manual *et seq*. The following sets forth the requirements currently included in the forms of transfer agent and registrar agreements and states where each requirement can be found in Section 601.00 of the Manual *et seq*.

Transfer Agent Registrar Agreement—Type A

1. That its capital, surplus (both capital and earned) and undivided profits now aggregate more than $10,000,000, and so long as it acts as a transfer agent or registrar, or both, for a single security issue or security issues listed on the NYSE, it will continue to have capital, surplus and undivided profits aggregating more than $10,000,000.

• The Exchange proposes to delete this requirement as it is duplicative of Section 601.01(A)(1) of the Manual.

2. That it will comply with the rules and requirements of the NYSE, as the same may from time to time be amended, in regard to the transfer and registration of security issues listed on the NYSE.

• The Exchange proposes to delete this requirement as it is duplicative of Section 601.01(A)(5) of the Manual.

3. That it will notify the Exchange, 10 days after the close of each calendar quarter, of the number of shares outstanding for each security listed on the Exchange.

• The Exchange proposes to delete this requirement as it is duplicative of Section 601.00(B) of the Manual.

4. That before ceasing to act as transfer agent or registrar, or both, for any security issue or issues listed on the NYSE it will give to the NYSE written notice of its intention to cease to act at least five (5) business days before the date after which it will no longer act as transfer agent or registrar, or both, provided, however, that no such notice shall be required if (1) a transfer agent or registrar, or both, approved by the NYSE, is to be substituted for the Agent or (2) the Agent is prevented by law or by contract from continuing to act as transfer agent or registrar, or both, for the length of time necessary to give such notice.

• The Exchange proposes to delete this requirement as it is duplicative of Section 601.02 of the Manual.

5. That the Agent's offices maintained for the purpose of transfer activities will be staffed by experienced personnel qualified to handle so-called ''legal terms'' and to advise on and handle other transfer problems.

• The Exchange proposes to delete this requirement as it is duplicative of Section 601.01(A)(6) of the Manual.

6. That it will provide adequate facilities for the safekeeping of securities in its possession or under its control with respect to which it acts as transfer agent or registrar or both.

• The Exchange proposes to delete this requirement as it is duplicative of Section 601.01(A)(7) of the Manual.

7. That all securities sent to a transfer agent (i) by mail or a commercial delivery service in each case on a same day or next day delivery basis, (ii) by a clearing agency registered with the Securities and Exchange Commission under Section 17A of the Exchange Act (a ''Clearing Agency''), (iii) clearly marked as a record date transfer, and (iv) deposited into the mail or with the commercial delivery service no later than the record date must, if the Clearing Agency so directs in writing in the letter of transmittal, be recorded by the transfer agent as having been received as of the record date so as to establish the transferee's rights as of that date. For purposes of this policy the term ''record date'' shall include any date as of which the rights of a shareholder are established.

• The Exchange proposes to delete this requirement as it is duplicative of Section 601.01(A)(3) of the Manual.

8. That in the case of routine transfers, the Agent agrees that any NYSE listed security received by the Agent for transfer, will be transferred, registered and mailed to the transferee of such security, within 48 hours (Saturdays, Sundays and holidays excluded) from the time of receipt of the securities by the transfer agent at its address designated for registration of transfers.

• The Exchange proposes to delete this requirement as it is duplicative of Section 601.01(A)(2) of the Manual.

9. That it will maintain facilities to expedite transfers, where requested, of NYSE listed security issues for which the Agent acts.

• The Exchange proposes to delete this requirement as it is duplicative of Section 601.01(A)(8) of the Manual.

10. That it will be totally responsible and liable for all securities for which it acts as Agent from the time the securities are delivered to or picked up by it, or by its designated Agent until such securities are picked up by or delivered to the recipient pursuant to instructions given to the Agent by the recipient.

• The Exchange proposes to delete this requirement as it is duplicative of Section 601.01(A)(4) of the Manual.

11. That in connection with any loss of any security for which the Agent acts while such security is in the custody of the Agent or arising in connection with any receipt, delivery or transportation of any such security by or for the Agent, or any armored car service used by the Agent, the Agent agrees that it will at all times maintain insurance covering any such loss; that such insurance shall be in the amount of not less than $25 million with respect to each such loss; and that such insurance shall be payable prior to any other insurance covering any such loss that may be maintained by and available to the NYSE.

• The Exchange proposes to delete this requirement as it is duplicative of Section 601.01(A)(1) of the Manual.

12. That when acting both as transfer agent and registrar for a single security issue, the Agent will assure that these functions are maintained separate and distinct with appropriate internal accounting controls, subject to an annual review by the Agent's independent auditors. Such auditors will provide a report on an annual basis to the Agent's Board of Directors with a copy to the NYSE setting forth the results of their review. The independent auditor's review shall include such tests of the transfer and registration systems and controls including the period since the prior examination date as considered necessary in the circumstances to establish that the control system is basically adequate and that no material weakness in the internal control exists. If applicable the auditor's report will comment upon any material weaknesses found to exist and shall indicate any corrective action taken or proposed.

• The Exchange proposes to delete this requirement as it is duplicative of Section 601.01(B) of the Manual.

13. That if the auditor's report, as outlined in Section 12 above, specifies any material weaknesses, the Agent hereby agrees to take immediate corrective action. When such corrective steps have been completed, the auditor will provide a subsequent letter indicating that the material weaknesses have been corrected.

• The Exchange proposes to delete this requirement as it is duplicative of Section 601.01(B) of the Manual.

14. That approval of an Agent to act pursuant to this agreement will not be granted until such time as an

independent auditor has submitted a report covering the results of such review to the Agent's Board of Directors and to the NYSE in a form satisfactory to the NYSE.

• The Exchange proposes to delete this requirement as it is duplicative of Section 601.01(B) of the Manual.

15. That the NYSE may at any time determine that the Agent is no longer a qualified transfer agent or registrar, or both, of a security issue or issues listed on the NYSE in the event the Agent fails to comply with all or any part of the provisions of this Agreement.

• The Exchange proposes to delete this requirement as it is duplicative of Section 601.01(A)(9) of the Manual.

16. The Agent hereby appoints _____ as its agent for service of process in connection with matters arising out of or by reason of Agent's acting as transfer agent or registrar or both, for NYSE listed security issues. This appointment shall be limited to process served in connection with the performance or failure to perform such services including transportation and custody, shall not extend to matters unrelated thereto or shall not be or be deemed to be a general appointment as agent for service upon the Agent.

• The Exchange proposes to delete this requirement as it is duplicative of Section 601.01(A)(15) of the Manual.

17. For companies required to maintain eligibility for a security in a direct registration system pursuant to Para. 501.00 of this Manual: The Agent will at all times be eligible either for the direct registration system operated by the Depository Trust Company or for another direct registration system operated by a securities depository that is registered as a clearing agency with the Securities and Exchange Commission pursuant to Section 17A(b)(2) of the Exchange Act.

• The Exchange proposes to delete this requirement as it is duplicative of Section 601.01(A)(13) of the Manual.

Transfer Agent Registrar Agreement—Type B

1. That its capital, surplus (both capital and earned) and undivided profits now aggregate more than $2,000,000 and so long as it acts as a transfer agent or registrar for security issues listed on the NYSE, it will continue to have capital, surplus and undivided profits aggregating more than $2,000,000.

• The Exchange proposes to delete this requirement as it is duplicative of Section 601.01(D) of the Manual.

2. That it will comply with the rules and requirements of the NYSE, as the same may from time to time be amended, in regard to the transfer and registration of security issues listed on the NYSE.

• The Exchange proposes to delete this requirement as it is duplicative of Section 601.01(A)(5) of the Manual.

3. That it will notify the Exchange, 10 days after the close of each calendar quarter, of the number of shares outstanding for each security listed on the Exchange.

• The Exchange proposes to delete this requirement as it is duplicative of Section 601.00(B) of the Manual.

4. That before ceasing to act in either capacity for any security issue or issues listed on the NYSE it will give to the NYSE written notice of its intention to cease to act at least five (5) business days before the date after which it will no longer act as transfer agent, or registrar provided, however, that no such notice shall be required if (1) a co-transfer agent or registrar approved by the NYSE, is to be substituted for the Agent or (2) the Agent is prevented by law or by contract from continuing to act as co-transfer agent or registrar for the length of time necessary to give such notice.

• The Exchange proposes to delete this requirement as it is duplicative of Section 601.02 of the Manual.

5. That the Agent's offices maintained for the purpose of transfer activities be staffed by experienced personnel qualified to handle so-called ''legal items'' and to advise on and handle other transfer problems.

• The Exchange proposes to delete this requirement as it is duplicative of Section 601.01(A)(6) of the Manual.

6. That it will provide adequate facilities for the safekeeping of securities in its possession or under its control with respect to which it acts as co-transfer agent or registrar.

• The Exchange proposes to delete this requirement as it is duplicative of Section 601.01(A)(7) of the Manual.

7. That, as co-transfer agent, it will be totally responsible and liable for all securities for which it acts from the time the securities are delivered to or picked up by it, or its designated agent, until such securities are picked up by or delivered to the recipient pursuant to instructions given to the Agent by the recipient.

• The Exchange proposes to delete this requirement as it is duplicative of Section 601.01(A)(4) of the Manual.

8. That all securities sent to a transfer agent (i) by mail or a commercial delivery service in each case on a same day or next day delivery basis, (ii) by a clearing agency registered with the Securities and Exchange Commission under Section 17A of the Exchange Act (a ''Clearing Agency''), (iii) clearly marked as a record date transfer, and (iv) deposited into the mail or with the commercial delivery service no later than the record date must, if the Clearing Agency so directs in writing in the letter of transmittal, be recorded by the transfer agent as having been received as of the record date so as to establish the transferee's rights as of that date. For purposes of this policy the term ''record date'' shall include any date as of which the rights of a shareholder are established.

• The Exchange proposes to delete this requirement as it is duplicative of Section 601.01(A)(3) of the Manual.

9. That in the case of routine transfers, the Agent agrees that any NYSE listed security delivered to or picked up by the Agent for transfer, will be transferred, registered and available for pick up at its office within 48 hours (Saturdays, Sundays and holidays excluded) from the time of pick up by or delivery to the Agent.

• The Exchange proposes to delete this requirement as it is duplicative of Section 601.01(A)(2) of the Manual.

10. That it will maintain facilities to expedite transfers, where requested, of NYSE listed security issues for which the Agent acts.

• The Exchange proposes to delete this requirement as it is duplicative of Section 601.01(A)(8) of the Manual.

11. That the NYSE may at any time determine that the Agent is no longer a qualified transfer agent or registrar of security issues listed on the NYSE in the event the Agent fails to comply with all or any part of the provisions of this Agreement.

• The Exchange proposes to delete this requirement as it is duplicative of Section 601.01(A)(9) of the Manual.

Agreement for Corporate Issuers To Act as Transfer Agent and Registrar

1. That it presently meets the Exchange's applicable minimum original or continued numerical standards for listing.

• The Exchange's minimum original and continued numerical standards for listing are set forth in Sections 102.00 and 802.01A of the Manual. For initial public offerings, the Exchange verifies these standards via an underwriter's representation letter. For transfers or continued listing issues, the Exchange verifies these standards via shareholder lists obtained from the Company, Broadridge Financial Solutions or the company's public filings. Because the Exchange can independently confirm the minimum original and continued numerical standards for listing, the

Exchange proposes to delete this requirement.

2. That it will comply with the rules and requirements of the NYSE, as the same may from time to time be amended, in regard to the transfer and registration of security issues listed on the NYSE.

• The Exchange proposes to delete this requirement as it is duplicative of Section 601.01(A)(5) of the Manual.

3. That it will notify the NYSE 10 days after the close of each calendar quarter of the number of shares outstanding for each security listed on the Exchange for which it acts as transfer agent and registrar.

• The Exchange proposes to delete this requirement as it is duplicative of Section 601.00(B) of the Manual.

4. That before ceasing to act as transfer agent and registrar, it will give to the NYSE written notice of its intention to cease to act at least five (5) business days before the date after which it will no longer act as transfer agent and registrar, provided, however, that no such notice shall be required if (1) a transfer agent and registrar approved by the NYSE is to be substituted for the Agent or (2) the Agent is prevented by law or by contract from continuing to act as transfer agent and registrar for the length of time necessary to give such notice.

• The Exchange proposes to delete this requirement as it is duplicative of Section 601.02 of the Manual.

5. That the Agent's offices maintained for the purpose of transfer activities will be staffed by experienced personnel qualified to handle so-called ''legal items'' and to advise on and handle other transfer problems.

• The Exchange proposes to delete this requirement as it is duplicative of Section 601.01(A)(6) of the Manual.

6. That it will provide adequate facilities for the safekeeping of securities in its possession or under its control with respect to which it acts as transfer agent and registrar.

• The Exchange proposes to delete this requirement as it is duplicative of Section 601.01(A)(7) of the Manual.

7. That all securities sent to a transfer agent (i) by mail or a commercial delivery service in each case on a same day or next day delivery basis, (ii) by a clearing agency registered with the Securities and Exchange Commission under Section 17A of the Exchange Act (a ''Clearing Agency''), (iii) clearly marked as a record date transfer, and (iv) deposited into the mail or with the commercial delivery service no later than the record date must, if the Clearing Agency so directs in writing in the letter of transmittal, be recorded by the transfer agent as having been received as of the record date so as to establish the transferee's rights as of that date. For purposes of this policy the term ''record date'' shall include any date as of which the rights of a shareholder are established.

• The Exchange proposes to delete this requirement as it is duplicative of Section 601.01(A)(3) of the Manual.

8. That in the case of routine transfers, the Agent agrees that its NYSE listed securities received by the Agent for transfer, will be transferred, registered and mailed to the transferee of such security within 48 hours (Saturdays, Sundays and holidays excluded) from the time of receipt of the securities by the transfer agent at its address designated for registration of transfers.

• The Exchange proposes to delete this requirement as it is duplicative of Section 601.01(A)(2) of the Manual.

9. That it will maintain facilities to expedite transfers, where requested, of its NYSE listed security issues.

• The Exchange proposes to delete this requirement as it is duplicative of Section 601.01(A)(8) of the Manual.

10. That it will be totally responsible and liable for all securities for which it acts as Agent from the time the securities are delivered to or picked up by it, or its designated agent, until such securities are delivered to the recipient pursuant to instructions given to the Agent by the recipient.

• The Exchange proposes to delete this requirement as it is duplicative of Section 601.01(A)(4) of the Manual.

11. That it will file an agreement with the Exchange indemnifying purchasers of its NYSE listed securities from and against any and all loss arising out of over/under issuance.

• The Exchange proposes to delete this requirement as it is duplicative of Section 601.01(B) of the Manual.

12. That the Agent will assure that the transfer agent and registrar functions are maintained separate and distinct with appropriate internal controls, subject to an annual review by the Agent's independent auditors. Such auditors will provide a letter on an annual basis to the Agent's Board of Directors with a copy to the NYSE setting forth the results of their review. The independent auditor's review shall include tests of the transfer and registrations systems and controls including the period since the prior examination date as considered necessary in the circumstances to establish that the control system is basically adequate and that no material weakness in the internal control exists. If applicable, the auditor's review will comment upon any inadequacies found to exist and shall indicate any corrective action taken or proposed.

• The Exchange proposes to delete this requirement as it is duplicative of Section 601.01(B) of the Manual.

13. That if the auditor's review, as outlined in Section 12 above, specified any inadequacies, the Agent hereby agrees to take immediate corrective action. When such corrective steps have been completed, the auditors will provide a subsequent letter indicating that the inadequacies have been corrected.

• The Exchange proposes to delete this requirement as it is duplicative of Section 601.01(B) of the Manual.

14. That approval to act pursuant to this agreement will not be granted until such time as an independent auditor has submitted a letter covering the results of such review to the Agent's Board of Directors and to the NYSE in a form satisfactory to the NYSE.

• The Exchange proposes to delete this requirement as it is duplicative of Section 601.01(B) of the Manual.

15. That the NYSE may at any time determine that the Agent is no longer a qualified transfer agent and registrar for its NYSE listed security issues in the event the Agent fails to comply with all or any part of the provisions of this Agreement.

• The Exchange proposes to delete this requirement as it is duplicative of Section 601.01(A)(9) of the Manual.

16. For companies required to maintain eligibility for a security in a direct registration system pursuant to Para 501.00 of this Manual: The Agent will at all times be eligible either for the direct registration system operated by the Depository Trust Company or for another direct registration system operated by a securities depository that is registered as a clearing agency with the Securities and Exchange Commission pursuant to Section 17A(b)(2) of the Exchange Act.

• The Exchange proposes to delete this requirement as it is duplicative of Section 601.01(A)(13) of the Manual.

2. Statutory Basis

The proposed rule change is consistent with Section 6(b) [25] of the Exchange Act in general, and furthers the objectives of Section 6(b)(5) [26] of the Exchange Act in particular, in that it is designed to prevent fraudulent and manipulative acts and practices, to promote just and equitable principles of trade, to foster cooperation and coordination with persons engaged in facilitating transactions in securities,

[25] 15 U.S.C. 78f(b).

[26] 15 U.S.C. 78f(b)(5).

and to remove impediments to and perfect the mechanisms of a free and open market and a national market system, and, in general, to protect investors and the public interest. The Exchange believes that the proposed rule change is consistent with the investor protection and public interest goals of the Exchange Act because a listing applicant will continue to undergo a rigorous application process, in which it will continue to provide to the Exchange all information necessary for the Exchange to make an informed decision about the issuer's qualification for listing. In addition, the proposed revised listing agreements provide that any listing applicant will agree to comply with the Exchange's rules.

The Exchange believes that: (i) The provisions the Exchange proposes to include in new Section 107.00 and (ii) the proposal to amend Section 802.01D to explicitly include a violation of the listing agreement as a basis for delisting are consistent with the protection of investors and the public interest. The requirements included in proposed Section 107.00 are all policies the Exchange has long applied as part of its initial listing process and they are important in insuring that only qualified companies are admitted to listing. The proposed amendment to Section 802.01D simply makes explicit that it may be appropriate in certain circumstances for the Exchange to utilize its discretion under that rule to delist a company for a violation of its listing agreement.

The proposed changes to Sections 702.03, 702.04, 901, 902.01 and 903 of the Manual are consistent with the protection of investors and the public interest, as the proposed changes do not to weaken regulatory requirements but instead simply streamline the Exchange's listing application process and the organization of the Manual by deleting from the Manual documents that will now be made available on the Exchange's Web site.

The proposed changes to Sections 104.00, 702.00 and 702.02 of the Manual are consistent with the protection of investors and the public interest, as the proposed changes do not to weaken regulatory requirements, but instead simply provide a more helpful description of the Exchange's confidential review of eligibility and overall listing process. The indicative timeline proposed to be deleted from Section 702.02 is very approximate and does not necessarily bear any relation to the listing experience of any individual company. The Exchange believes these changes, as described in Part I above, will make the relevant sections more informative for listing applicants and add transparency and clarity to the Exchange's rules.

The Exchange's proposed changes to Sections 906.01, 906.02, 906.03, 601.01 and 601.03 of the Manual, deleting the requirements with respect to transfer agent and registrar agreements, are consistent with the protection of investors and the public interest, as a listing applicant will continue to be required to explicitly agree in the revised listing agreement that it will have a qualified transfer agent and registrar at all times while listed on the Exchange.

The proposed modifications to the listing application are consistent with the protection of investors and the public interest, because the Exchange is simply eliminating from the application information requirements that are duplicative of disclosure requirements under the Federal securities laws or where similar disclosure provisions under the Federal securities laws provide information sufficient for the Exchange to make informed determinations about the suitability of issuers for listing.

The proposed modifications to the domestic and foreign listing agreements are consistent with the protection of investors and the public interest because, as described in detail in Parts II and III of the ''Purpose'' section of this filing, any requirements that are eliminated are either: (i) Duplicative of provisions included elsewhere in the Manual as listing rules; (ii) no longer applicable because the SEC has previously approved the elimination of an identical listing rule requirement; (iii) no longer relevant in light of changes to the structure and practices in the securities markets; or (iv) proposed additions to the Manual as listing rules.

The Exchange's proposed changes to Sections 701.02, 702.06 and 703 of the Manual, as described in Part I above, are technical and conforming changes that are non-substantive in nature.

The Exchange's proposed deletion of Section 702.01 of the Manual in its current form, as described more fully in Part I of the ''Purpose'' section of this filing, is consistent with the protection of investors and the public interest, as it simply eliminates a description which is not accurate as it relates to the listing application process proposed to be adopted pursuant to this filing.

The proposed deletion of Section 702.05 of the Manual is consistent with the protection of investors and the public interest, because market participants and investors no longer need to rely on the publication of an issuer's listing application by the Exchange for information about the issuer, as all disclosures material to an investment in that issuer's securities must be included in such issuer's SEC filings.

The proposed deletions of Sections 904.01–904.03 of the Manual are consistent with the protection of investors and the public interest, as: (i) The Stock Distribution Schedule in Section 904.01 is obsolete because the Exchange obtains the distribution information it needs from the Company's transfer agent; (ii) the information required by Section 904.02 would be required to be included in the revised listing application; and (iii) the ''Due Bill'' Form Letter included in Section 904.03 is no longer used, as investors have access to this information in real time through online market data service providers.

B. Self-Regulatory Organization's Statement on Burden on Competition

The Exchange does not believe that the proposed rule change will impose any burden on competition. The proposed rule change does not substantively alter the requirements for initial listing in any material respect and therefore will not advantage the Exchange in competing for new listings.

C. Self-Regulatory Organization's Statement on Comments on the Proposed Rule Change Received From Members, Participants, or Others

No written comments were solicited or received with respect to the proposed rule change.

III. Date of Effectiveness of the Proposed Rule Change and Timing for Commission Action

Within 45 days of the date of publication of this notice in the **Federal Register** or within such longer period (i) as the Commission may designate up to 90 days of such date if it finds such longer period to be appropriate and publishes its reasons for so finding or (ii) as to which the self-regulatory organization consents, the Commission will:

(A) By order approve or disapprove the proposed rule change, or

(B) institute proceedings to determine whether the proposed rule change should be disapproved.

IV. Solicitation of Comments

Interested persons are invited to submit written data, views, and arguments concerning the foregoing, including whether the proposed rule change is consistent with the Act. Comments may be submitted by any of the following methods:

Electronic Comments

- Use the Commission's Internet comment form (*http://www.sec.gov/rules/sro.shtml*); or
- Send an email to *rule-comments@sec.gov.* Please include File Number SR–NYSE–2013–33 on the subject line.

Paper Comments

- Send paper comments in triplicate to Elizabeth M. Murphy, Secretary, Securities and Exchange Commission, 100 F Street NE., Washington, DC 20549–1090.

All submissions should refer to File Number SR–NYSE–2013–33. This file number should be included on the subject line if email is used. To help the Commission process and review your comments more efficiently, please use only one method. The Commission will post all comments on the Commission's Internet Web site (*http://www.sec.gov/rules/sro.shtml*). Copies of the submission, all subsequent amendments, all written statements with respect to the proposed rule change that are filed with the Commission, and all written communications relating to the proposed rule change between the Commission and any person, other than those that may be withheld from the public in accordance with the provisions of 5 U.S.C. 552, will be available for Web site viewing and printing in the Commission's Public Reference Room, 100 F Street NE., Washington, DC 20549, on official business days between the hours of 10 a.m. and 3 p.m. Copies of the filing will also be available for inspection and copying at the principal office of the Exchange. All comments received will be posted without change; the Commission does not edit personal identifying information from submissions. You should submit only information that you wish to make available publicly. All submissions should refer to File Number SR–NYSE–2013–33 and should be submitted on or before June 7, 2013.

For the Commission, by the Division of Trading and Markets, pursuant to delegated authority.[27]

Kevin M. O'Neill,

Deputy Secretary.

[FR Doc. 2013–11759 Filed 5–16–13; 8:45 am]

BILLING CODE 8011–01–P

[27] 17 CFR 200.30–3(a)(12).

SECURITIES AND EXCHANGE COMMISSION

[Release No. 34–69562; File No. SR–DTC–2013–01]

Self-Regulatory Organizations; The Depository Trust Company; Order Approving Proposed Rule Change To Modify Its Practice Regarding the Collection of Participants' Required Participants Fund Deposits

May 13, 2013.

I. Introduction

On March 20, 2013, The Depository Trust Company (''DTC'') filed with the Securities and Exchange Commission (''Commission'') proposed rule change SR–DTC–2013–01 (''Proposed Rule Change'') pursuant to Section 19(b)(1) of the Securities Exchange Act of 1934 (''Act'')[1] and Rule 19b–4 thereunder.[2] The Proposed Rule Change was published in the **Federal Register** on April 8, 2013.[3] This order approves the Proposed Rule Change.

II. Description

DTC filed the Proposed Rule Change to accelerate DTC's collection of a Participant's required deposit to DTC's Participants Fund in certain circumstances from two business days to the same day that the Participant is notified of the requirement, as described below.

A. Participants Fund

Pursuant to Rule 4 of its Rules, By-laws, Organization Certificate (''DTC Rules''), DTC maintains resources funded by its Participants that is a liquidity resource and is available to satisfy any uninsured loss incurred by DTC, including a loss resulting from a Participant's failure to settle its transactions (''Participants Fund'').[4] Each Participant's required deposit to the Participants Fund (''Required Participants Fund Deposit'') is calculated daily pursuant to an established formula.[5] While the minimum deposit is $10,000, each Participant is required to make a deposit to the Participants Fund based upon a formula that takes into account the Participant's six largest intraday net debit peaks over a rolling 60 business-day period.[6] Typically DTC collects new Participants Fund deposits once per month for each Participant.[7] However, if the Participant's newly calculated Required Participants Fund Deposit is greater than its prior day's Required Participants Fund Deposit, and the difference thereof (i) equals or exceeds $500,000 and (ii) represents 25 percent or more of that Participant's newly calculated required fund deposit (''Threshold Amount and Percentage''), the Participant currently must deposit the difference, to the extent any excess amount of the Participant's Actual Participants Fund Deposit[8] does not already satisfy the new requirement, in the Participants Fund within two business days.[9]

B. Proposed Rule Change

In order to enhance its liquidity and risk coverage, DTC is accelerating the collection of Participants' Required Participants Fund Deposits, in the circumstances where DTC currently collects it within two business days, to the same day the Participant is notified of the requirement. In other words, for both the daily and monthly calculations that trigger collections, as described above, increased deposit requirements will be collected by DTC on a same-day basis, instead of within two business days.

To account for this rule change, DTC is revising the text of its Settlement Services Guide to provide that where a Participant's calculated Required Participants Fund Deposit meets the Threshold Amount and Percentage, the increased amount must (to the extent any excess amount of the Participant's Actual Participants Fund Deposit does not already satisfy the new requirement) be deposited with DTC on the same business day as (i) the calculation of the increase, and (ii) a report or other notification of the change is made available to the Participant.

As mentioned above, in order to harmonize the Participants Fund collection processes, monthly increases

[1] 15 U.S.C. 78s(b)(1).

[2] 17 CFR 240.19b–4.

[3] Release No. 34–69276 (Apr. 2, 2013), 78 FR 20999 (Apr. 8, 2013).

[4] *See* DTC Rules (*http://dtcc.com/legal/rules_proc/dtc_rules.pdf*).

[5] *Id.,* Rule 4(a).

[6] *See* DTC Settlement Service Guide (*http://dtcc.com/downloads/products/learning/Settlement.pdf*). DTC may also require an additional deposit to the Participants Fund in the event that DTC becomes concerned with a Participant's financial soundness. *See* DTC Rules, *supra* note 4, Rule 9(A). Separately, a Participant may make a voluntary deposit to the Participants Fund (''Voluntary Participants Fund Deposit'') in excess of the amount required. *See id.,* Rule 4(c). These two provisions are not impacted by the Proposed Rule Change.

[7] *See* DTC Rules, *supra* note 4, Rule 4(b).

[8] *See* DTC Rules, *supra* note 4, Rule 4(b). ''Actual Participants Fund Deposit'' means the actual amount the Participant has deposited to the Participants Fund, including both its Required Participants Fund Deposit and any Voluntary Participants Fund Deposit. *Id.,* Rule 1.

[9] *See* DTC Settlement Service Guide, *supra* note 6.

will also be collected on a same-day basis and DTC is adding language to the Settlement Service Guide in this regard. In addition, DTC is adding language to the Settlement Service Guide to clarify that the relevant Guide provisions shall apply only to the calculation and collection of DTC Participants Fund deposits, as described in the Guide, and do not supersede or limit any provisions of the DTC Rules or any rights of DTC in accordance with applicable law and DTC's Rules and Procedures, including but not limited to transactions in securities and money payments.

Finally, DTC is making certain clarifying and technical changes to the language as set forth in the ''Participants Fund'' section of its Settlement Service Guide, including (i) updating the description of the purpose of the Participants Fund, (ii) updating the use of defined terms, such as ''Participant,'' and (iii) updating and adding subject headings.

III. Discussion

Section 19(b)(2)(C) of the Act directs the Commission to approve a proposed rule change of a self-regulatory organization if it finds that such proposed rule change is consistent with the requirements of the Act and the rules and regulations thereunder applicable to such organization.[10] Section 17A(b)(3)(F) of the Act requires that, among other things, ''[t]he rules of the clearing agency are designed to promote the prompt and accurate clearance and settlement of securities transactions and . . . to assure the safeguarding of securities and funds which are in the custody or control of the clearing agency or for which it is responsible.''[11] Furthermore, Commission Rule 17Ad–22(d)(11) regarding default procedures, adopted as part of the Clearing Agency Standards,[12] requires that registered clearing agencies ''establish, implement, maintain and enforce written policies and procedures reasonably designed to, as applicable: . . . establish default procedures that ensure that the clearing agency can take timely action to contain losses and liquidity pressures and to continue meeting its obligations in the event of a participant default.''[13]

Here, as described above, DTC's proposed rule change to accelerate collection of increases in Participants' Required Participants Fund Deposits in certain circumstances from two business days to the same day that the Participant is notified of the increase should, generally, help further safeguard the securities and settlement process as a whole, as required by Section 17A(b)(3)(F) of the Act,[14] since DTC will have access to the required funds, which are calculated by an established formula, more quickly. More specifically, this rule change should help improve DTC's ability to take timely action to contain losses and liquidity pressures and to continue meeting its obligations in the event of a Participant default, as required by Commission Rule 17Ad–22(d)(11),[15] by providing DTC with funds likely necessary to contain such losses and liquidity pressures in the event of a defaulting Participant.

IV. Conclusion

On the basis of the foregoing, the Commission finds the Proposed Rule Change is consistent with the requirements of the Act, particularly with the requirements of Section 17A of the Act,[16] and the rules and regulations thereunder.

It is therefore ordered, pursuant to Section 19(b)(2) of the Act,[17] that the proposed rule change SR–DTC–2013–01 be and hereby is *approved.*[18]

For the Commission by the Division of Trading and Markets, pursuant to delegated authority.[19]

Kevin M. O'Neill,

Deputy Secretary.

[FR Doc. 2013–11758 Filed 5–16–13; 8:45 am]

BILLING CODE 8011–01–P

[10] 15 U.S.C. 78(s)(b)(2)(C).

[11] 15 U.S.C. 78q–1(b)(3)(F).

[12] Release No. 34–68080 (Oct. 22, 2012), 77 FR 66219 (Nov. 2, 2012).

[13] 17 CFR 240.17Ad–22(d)(11).

[14] 15 U.S.C. 78q–1(b)(3)(F).

[15] 17 CFR 240.17Ad–22(d)(11).

[16] 15 U.S.C. 78q–1.

[17] 15 U.S.C. 78s(b)(2).

[18] In approving the Proposed Rule Change, the Commission considered the proposal's impact on efficiency, competition, and capital formation. 15 U.S.C. 78c(f).

[19] 17 CFR 200.30–3(a)(12).

SECURITIES AND EXCHANGE COMMISSION

[Release No. 34–69563; File No. SR–NASDAQ–2013–073]

Self-Regulatory Organizations; The NASDAQ Stock Market LLC; Notice of Filing and Immediate Effectiveness of Proposed Rule Change To Amend Rule 4120 To Adopt a Modification in the Process for Initiating Trading of a Security That Is the Subject of a Trading Halt or Pause on NASDAQ

May 13, 2013.

Pursuant to Section 19(b)(1) of the Securities Exchange Act of 1934 (the ''Act'')[1] and Rule 19b–4 thereunder,[2] notice is hereby given that on April 29, 2013, The NASDAQ Stock Market LLC (''NASDAQ'' or ''Exchange'') filed with the Securities and Exchange Commission (''Commission'') the proposed rule change as described in Items I and II below, which Items have been prepared by the Exchange. The Commission is publishing this notice to solicit comments on the proposed rule change from interested persons.

I. Self-Regulatory Organization's Statement of the Terms of Substance of the Proposed Rule Change

NASDAQ proposes to amend Rule 4120 to adopt a modification in the process for initiating trading of a security that is the subject of a trading halt or pause on NASDAQ, and to make several additional modifications to Rule 4120 to clarify the conditions under which NASDAQ will conduct a halt cross. NASDAQ proposes to implement the proposed rule change on a date that is on, or shortly after, the 30th day following the date of the filing. The text of the proposed rule change is available on the Exchange's Web site at *http://www.nasdaq.cchwallstreet.com,* at the principal office of the Exchange, and at the Commission's Public Reference Room.

II. Self-Regulatory Organization's Statement of the Purpose of, and Statutory Basis for, the Proposed Rule Change

In its filing with the Commission, the Exchange included statements concerning the purpose of and basis for the proposed rule change. The text of these statements may be examined at the places specified in Item IV below. The Exchange has prepared summaries, set forth in sections A, B, and C below, of the most significant aspects of such statements.

A. Self-Regulatory Organization's Statement of the Purpose of, and Statutory Basis for, the Proposed Rule Change

1. Purpose

In 2012, NASDAQ modified its process for commencing trading of a security that is the subject of an initial public offering (an ''IPO'') on NASDAQ by allowing market participants to enter orders to be held in an undisplayed state until the commencement of the Display-Only Period that occurs prior to

[1] 15 U.S.C. 78s(b)(1).

[2] 17 CFR 240.19b–4.

the IPO.[3] NASDAQ is now proposing a similar change with regard to entering orders prior to the end of other trading halts or pauses on NASDAQ. Rule 4120(a) describes the circumstances under which NASDAQ has the authority to initiate a trading halt. As detailed in Rule 4120(a), the specific bases for a halt include the following:

- A halt to permit the dissemination of material news with respect to a NASDAQ-listed security (Rule 4120(a)(1));
- a halt when a security listed on another national securities exchange is halted to permit dissemination of news (Rule 4120(a)(2)) or due to an order imbalance or influx (Rule 4120(a)(3));
- a halt in an American Depository Receipt (''ADR'') or other security listed on Nasdaq, when the Nasdaq-listed security or the security underlying the ADR is listed on or registered with another national or foreign securities exchange or market, and the regulatory authority overseeing such exchange or market halts trading in such security for regulatory reasons (Rule 4120(a)(4));
- a halt when Nasdaq requests from the issuer information relating to material news or the issuer's ability to meet Nasdaq listing qualification requirements, or any other information necessary to protect investors and the public interest (Rule 4120(a)(5));
- a halt trading in a security listed on NASDAQ when extraordinary market activity in the security is occurring, NASDAQ determines that the activity is likely to have a material effect on the market for the security, and NASDAQ believes that the activity is caused by the misuse or malfunction of an electronic quotation, communication, reporting, or execution system (Rule 4120(a)(6));
- a halt with respect to an index warrant when deemed appropriate in the interests of a fair and orderly market and to protect investors (Rule 4120(a)(8));
- a halt in a series of Portfolio Depository Receipts, Index Fund Shares or Managed Fund Shares listed on Nasdaq if the Intraday Indicative Value or the index value applicable to that series is not being disseminated as required (Rule 4120(a)(9));
- a halt in a Derivative Securities Product (as defined in Rule 4120(b)(4)(A)) for which a net asset value (''NAV'') or a Disclosed Portfolio is disseminated if Nasdaq becomes aware that the NAV or Disclosed Portfolio is not being disseminated to all market participants at the same time (Rule 4120(a)(10));
- a trading pause with respect to NASDAQ-listed stocks that are not subject to the Limit Up-Limit Down Plan[4] and that are experiencing certain large price movements, as defined by Rule 4120(a)(11), or with respect to a NASDAQ-listed stock that is subject to the Limit Up-Limit Down Plan and that is in a ''straddle state,'' as defined by Rule 4120(a)(12)(F); and
- a trading halt in a Derivative Security Product traded pursuant to unlisted trading privileges for which a ''Required Value,'' such as an intraday indicative value or disclosed portfolio, is not being disseminated, under the conditions described in Rule 4120(b).[5]

Rule 4120(c)(7) provides that in the case of a halt under Rule 4120(a)(1), (4), (5), (6), (9), (10), or (11), or Rule 4120(b), prior to terminating the halt, there is a 5-minute Display-Only Period during which market participants may enter quotes and orders into the NASDAQ Market Center. At the conclusion of the Display-Only Period, trading commences through the halt cross process provided for in Rule 4753.[6] However, if at the end of a Display-Only Period, NASDAQ detects an order imbalance in the security, the halt may be extended for an additional Display-Only Period of one minute. NASDAQ notes that the purpose of the halt cross is to establish a consensus price for the resumption of trading of securities for which NASDAQ is the primary listing market. Accordingly, NASDAQ does not believe that it is warranted to conduct a halt cross for securities listed on other exchanges. Accordingly, NASDAQ is removing the reference to Rule 4120(b) from Rule 4120(c)(7), since Rule 4120(b) pertains solely to halts of securities traded on an unlisted traded privileges (''UTP'') basis. In addition, since halts under Rule 4120(a)(10) may pertain either to securities listed on NASDAQ or securities traded on a UTP basis, NASDAQ is further amending the rule to clarify that a halt cross is conducted only for securities listed on NASDAQ. Finally, since Rule 4120(a)(12)(F) contemplates a halt cross for a NASDAQ-listed security subject to the Limit Up-Limit Down Plan that is in a straddle state, NASDAQ is adding a reference to this provision to Rule 4120(c)(7).

Halts for securities not listed on NASDAQ are terminated at the time specified by NASDAQ, and a halt cross is not performed prior to resumption of trading.

Under the current process, quotes and orders in a halted security (with the exception of a security halted for an IPO) may not be entered until the commencement of the Display-Only Period, in the instance of a security for which a halt cross will occur, or until the resumption of trading in other instances. However, NASDAQ believes that the quality of its process for commencing trading in the halted security would be enhanced by allowing market participants to enter orders to be held but not displayed until the beginning of the Display-Only Period, in the instances of a security for which a halt cross will occur, or until the resumption of trading in other instances.[7] Specifically, NASDAQ believes that this change will provide for a greater number of orders being entered prior to commencement of trading, resulting in a higher level of order interaction in the cross or at the resumption of trading.[8]

Orders entered in this manner will be held in a suspended state until the beginning of the Display-Only Period or the resumption of trading, as applicable, at which time they will be entered into the system. Market participants may cancel orders entered in this manner in the same way they would cancel any other order. Orders entered prior to the Display-Only Period or the resumption of trading, as applicable, will be rejected unless they are designated for holding.

[3] Securities Exchange Act Release No. 66652 (March 23, 2012), 77 FR 13129 (March 29, 2012) (SR–NASDAQ–2012–038).

[4] Plan to Address Extraordinary Market Volatility Submitted to the Commission Pursuant to Rule 608 of Regulation NMS under the Act, Securities Exchange Act Release No. 67091 (May 31, 2012), 77 FR 33498 (June 6, 2012).

[5] Rule 4120 provides for a halt when a security is the subject of an IPO on NASDAQ (Rule 4120(a)(7)). Entry of orders during an IPO halt was addressed in a prior proposed rule change. *See supra* n.3.

[6] Rule 4120 also provides for a Display-Only Period and a halt cross in the case of a halt under Rule 4120(b). Since that rule applies only to securities traded on an unlisted trading privileges (''UTP'') basis, NASDAQ believes that it is not necessary to conduct a halt cross prior to resumption of trading, consistent with other halts applicable to securities that are traded on a UTP basis. Accordingly, the rule is being amended to remove the reference to Rule 4120(b) from the provision of the rule that requires a cross for the resumption of trading.

[7] Because the orders would be held in an undisplayed state, the change would not implicate NASDAQ Rule 3340 or FINRA Rule 5260, which prohibit transactions, publication of quotations, or publication of indications of interest during a trading halt.

[8] NASDAQ notes that in the case of a trading pause under Rule 4120(a)(11) or (12), the Display-Only Period commences at the same time as the trading pause. Accordingly, the proposed rule change does not alter the status quo with respect to such trading pauses. Rather, the proposed rule change provides that ''in instances where a trading halt is in effect prior to the commencement of the Display Only Period, market participants may enter orders in a security that is the subject of the trading halt on Nasdaq and designate such orders to be held until the beginning of the Display Only Period.''

With respect to halts for which a halt cross will not occur, the orders will be entered into the continuous market once trading resumes.[9] With respect to halts for which a cross will occur, the orders will be processed in the manner provided for in Rule 4753.

2. Statutory Basis

NASDAQ believes that the proposed rule change is consistent with the provisions of Section 6 of the Act,[10] in general, and with Section 6(b)(5) of the Act,[11] in particular, in that the proposal is designed to prevent fraudulent and manipulative acts and practices, to promote just and equitable principles of trade, to foster cooperation and coordination with persons engaged in regulating, clearing, settling, processing information with respect to, and facilitating transactions in securities, to remove impediments to and perfect the mechanism of a free and open market and a national market system, and, in general, to protect investors and the public interest. Specifically, NASDAQ believes that the change to allow entry of quotes and orders for holding during a trading halt will provide for a greater number of orders being entered prior to commencement of trading, resulting in a higher level of order interaction in the re-opening process. Thus, NASDAQ believes that the change will remove impediments to and perfect the mechanism of a free and open market. NASDAQ further believes that the proposed change to clarify that halt crosses will not be conducted for the resumption of trading in securities traded on a UTP basis is consistent with the halt cross's purpose of establishing a consensus price for the resumption of trading of securities for which NASDAQ is the primary listing market. Because this price is established by the listing market for securities that NASDAQ trades on a UTP basis, NASDAQ believes that conducting a halt cross for such securities is not necessary to remove impediments to and perfect the mechanism of a free and open market and a national market system.

B. Self-Regulatory Organization's Statement on Burden on Competition

NASDAQ does not believe that the proposed rule change will result in any burden on competition that is not necessary or appropriate in furtherance of the purposes of the Act, as amended. Specifically, NASDAQ believes that this change will provide for a greater number of orders being entered prior to commencement of trading, resulting in a higher level of order interaction. NASDAQ believes that this change will promote competition by enhancing the attractiveness of NASDAQ as a trading venue through higher order fill rates and more complete price discovery. Moreover, because the change will not affect the availability or price of goods or services offered by NASDAQ or others, it will not impose any burden on competition.

C. Self-Regulatory Organization's Statement on Comments on the Proposed Rule Change Received From Members, Participants, or Others

No written comments were either solicited or received.

III. Date of Effectiveness of the Proposed Rule Change and Timing for Commission Action

The Exchange has filed the proposed rule change pursuant to Section 19(b)(3)(A)(iii) of the Act[12] and Rule 19b–4(f)(6) thereunder.[13] Because the proposed rule change does not: (i) Significantly affect the protection of investors or the public interest; (ii) impose any significant burden on competition; and (iii) become operative prior to 30 days from the date on which it was filed, or such shorter time as the Commission may designate, if consistent with the protection of investors and the public interest, the proposed rule change has become effective pursuant to Section 19(b)(3)(A) of the Act and Rule 19b–4(f)(6)(iii) thereunder.

At any time within 60 days of the filing of such proposed rule change, the Commission summarily may temporarily suspend such rule change if it appears to the Commission that such action is necessary or appropriate in the public interest, for the protection of investors, or otherwise in furtherance of the purposes of the Act.

IV. Solicitation of Comments

Interested persons are invited to submit written data, views, and arguments concerning the foregoing, including whether the proposed rule change is consistent with the Act. Comments may be submitted by any of the following methods:

Electronic Comments

- Use the Commission's Internet comment form (*http://www.sec.gov/rules/sro.shtml*); or
- Send an email to *rule-comments@sec.gov.* Please include File Number SR–NASDAQ–2013–073 on the subject line.

Paper Comments

- Send paper comments in triplicate to Elizabeth M. Murphy, Secretary, Securities and Exchange Commission, 100 F Street NE., Washington, DC 20549–1090.

All submissions should refer to File Number SR–NASDAQ–2013–073. This file number should be included on the subject line if email is used. To help the Commission process and review your comments more efficiently, please use only one method. The Commission will post all comments on the Commission's Internet Web site (*http://www.sec.gov/rules/sro.shtml*). Copies of the submission, all subsequent amendments, all written statements with respect to the proposed rule change that are filed with the Commission, and all written communications relating to the proposed rule change between the Commission and any person, other than those that may be withheld from the public in accordance with the provisions of 5 U.S.C. 552, will be available for Web site viewing and printing in the Commission's Public Reference Room, 100 F Street NE., Washington, DC 20549, on official business days between the hours of 10:00 a.m. and 3:00 p.m. Copies of such filing also will be available for inspection and copying at the principal office of the Exchange. All comments received will be posted without change; the Commission does not edit personal identifying information from submissions. You should submit only information that you wish to make publicly available. All submissions should refer to File Number SR–NASDAQ–2013–073 and should be submitted on or before June 7, 2013.

[9] Orders entered and held during the halt period will be entered into the continuous market in the order in which they were received. However, such orders will be entered contemporaneously with any orders received through order entry ports after the halt is terminated. Thus, the relative priority of orders received during the halt and orders received through order entry ports after the halt is terminated will be a function of the duration of system processing associated with each particular order. As a result, orders received during the halt will not automatically have priority over orders received at the conclusion of the halt.

[10] 15 U.S.C. 78f.

[11] 15 U.S.C. 78f(b)(5).

[12] 15 U.S.C. 78s(b)(3)(A)(iii).

[13] 17 CFR 240.19b–4(f)(6). In addition, Rule 19b–4(f)(6) requires the Exchange to give the Commission written notice of the Exchange's intent to file the proposed rule change, along with a brief description and text of the proposed rule change, at least five business days prior to the date of filing of the proposed rule change, or such shorter time as designated by the Commission. The Exchange has satisfied this requirement.

For the Commission, by the Division of Trading and Markets, pursuant to delegated authority.[14]

Lynn M. Powalski,

Deputy Secretary.

[FR Doc. 2013–11733 Filed 5–16–13; 8:45 am]

BILLING CODE 8011–01–P

SECURITIES AND EXCHANGE COMMISSION

[Release No. 34–69561; File No. SR–FINRA–2013–013]

Self-Regulatory Organizations; Financial Industry Regulatory Authority, Inc.; Order Approving the Proposed Rule Change, as Modified by Amendment No. 1, To Require Members To Report OTC Equity Transactions as Soon as Practicable, But No Later Than 10 Seconds, Following Execution

May 13, 2013.

I. Introduction

On February 1, 2013, Financial Industry Regulatory Authority, Inc. (''FINRA'') filed with the Securities and Exchange Commission (''Commission''), pursuant to Section 19(b)(1) of the Securities Exchange Act of 1934 (''Act'') [1] and Rule 19b–4 thereunder,[2] a proposed rule change to require that members report over-the-counter (''OTC'') transactions in NMS stocks and OTC Equity Securities,[3] and cancellations of such transactions, to FINRA as soon as practicable, but no later than 10 seconds, following execution (or cancellation, as applicable). The proposed rule change was published for comment in the **Federal Register** on February 12, 2013.[4] The Commission received five comment letters in response to the proposed rule change.[5] On May 7, 2013 FINRA responded to the comment letters and filed Amendment No. 1 to the proposed rule change.[6] This order approves the proposed rule change, as modified by Amendment No. 1.

II. Description of the Proposal

FINRA trade reporting rules currently require that members report OTC transactions in NMS stocks and OTC Equity Securities that are executed during the hours that the FINRA Facilities are open within 30 seconds of execution.[7] In addition, members must report the cancellation of a trade within 30 seconds of the time of cancellation if the trade is both executed and cancelled on the same day during normal market hours.[8] Under current FINRA guidance, members are expected to report transactions as soon as practicable and would violate the rule if they withhold trade reports, *e.g.,* by programming their systems to delay reporting until the last permissible second.[9]

FINRA proposed to amend its trade reporting rules to require members to report OTC transactions in NMS stocks and OTC Equity Securities as soon as practicable, but no later than 10 seconds, following execution and to report trade cancellations as soon as practicable, but no later than 10 seconds, after the time of cancellation.[10] Under the proposed rule change, all transactions not reported within 10 seconds will be marked late (unless expressly subject to a different reporting requirement [11] or excluded from the trade reporting rules altogether). In the filing, FINRA stated that it understands that there will be isolated instances where a member is unable to report trades within the time period prescribed by rule, and FINRA will continue to look for a pattern or practice [12] of unexcused late trade reporting before taking action against a member. Pursuant to FINRA Rules 6181 and 6623, unexcused late reporting occurs when there are ''repeated reports of executions submitted after the required time period without reasonable justification or exceptional circumstances.'' The rules also provide that ''[e]xceptional circumstances will be determined on a case-by-case basis and may include instances of system failure by a member or service bureau, or unusual market conditions, such as extreme volatility in a security, or in the market as a whole.''

FINRA also proposed to adopt Supplementary Material to clarify the requirement that members report trades and trade cancellations ''as soon as practicable.'' Specifically, the proposed Supplementary Material provides that members must adopt policies and procedures reasonably designed to achieve compliance with this requirement and must program systems to commence the trade reporting process without delay upon execution (or cancellation, as applicable). Where a member has such reasonably designed policies, procedures and systems in place, the member will not be viewed as violating the ''as soon as practicable'' requirement because of delays in trade reporting that are due to external factors so long as the member does not purposely delay the reporting of the trade. The proposed Supplementary Material also expressly prohibits members from purposely withholding trade reports, *e.g.,* by programming their systems to delay reporting until the last permissible second. FINRA notes that members that engage in a pattern and practice [13] of unexcused late reporting (*i.e.,* reporting later than 10 seconds

[14] 17 CFR 200.30–3(a)(12).

[1] 15 U.S.C. 78s(b)(1).

[2] 17 CFR 240.19b–4.

[3] OTC transactions in NMS stocks, as defined in SEC Rule 600(b) of Regulation NMS, are reported through the Alternative Display Facility (''ADF'') or a Trade Reporting Facility (''TRF''), and transactions in ''OTC Equity Securities,'' as defined in FINRA Rule 6420 (*i.e.,* non-NMS stocks such as OTC Bulletin Board and OTC Market securities), are reported through the OTC Reporting Facility (''ORF''). The ADF, TRFs and ORF are collectively referred to herein as the ''FINRA Facilities.''

[4] *See* Securities Exchange Act Release No. 68842 (February 6, 2013), 78 FR 9963 (''Notice'').

[5] *See* Letter from Christopher Nagy, President, KOR Trading LLC to Elizabeth M. Murphy, Secretary, Commission, dated March 5, 2013 (''KOR Letter''); Letter from David J. Amster, Chief Compliance Officer, CRT Capital Group to the Commission, dated March 5, 2013 (''CRT Letter''); Letter from David S. Sieradzki, Partner, Bracewell & Giuliani LLP on behalf of GFI Securities LLC to Elizabeth M. Murphy, Secretary, Commission, dated March 5, 2013 (''GFI Letter''); Letter from Manisha Kimmel, Executive Director, Financial Information Forum to Elizabeth M. Murphy, Secretary, Commission, dated March 6, 2013 (''FIF Letter''); and Letter from Theodore R. Lazo, Managing Director and Associate General Counsel, Securities Industry and Financial Markets Association to Elizabeth M. Murphy, Secretary, Commission, dated March 18, 2013 (''SIFMA Letter'').

[6] *See* Letter from Stephanie Dumont, Senior Vice President and Director of Capital Markets Policy, FINRA to the Commission dated May 7, 2013 (''FINRA Response''). *See also* Amendment No. 1 dated May 7, 2013 (FINRA proposed to adopt Supplementary Material to provide it will take such factors as the complexity and manual nature of the execution and reporting of the trade into consideration in determining whether ''reasonable justification'' exists to excuse what otherwise may be deemed to be a pattern or practice of late trade reporting). (''Amendment No. 1''). Because Amendment No. 1 is technical in nature, it is not subject to notice and comment.

[7] *See, e.g.,* FINRA Rules 6282(a), 6380A(a), 6380B(a) and 6622(a).

The TRFs and ORF are open between 8:00 a.m. and 8:00 p.m., and the ADF is open between 8:00 a.m. and 6:30 p.m.

[8] *See, e.g.,* FINRA Rules 6282(j)(2)(A), 6380A(g)(2)(A), 6380B(f)(2)(A) and 6622(f)(2)(A).

Members must report all cancellations of previously reported trades to FINRA; however, where the trade is executed or canceled outside of normal market hours, the 30-second requirement does not apply to the reporting of the cancellation.

[9] *See* FINRA Regulatory Notice 10–24 (April 2010).

[10] FINRA also is proposing conforming changes to replace the reference to 30 seconds with 10 seconds in the rules relating to the reporting of stop stock and ''prior reference price'' transactions. *See* FINRA Rules 6282(a)(4), 6380A(a)(5), 6380B(a)(5) and 6622(a)(5).

[11] For example, the proposed rule change will not amend the reporting requirements applicable to transactions in Restricted Equity Securities, as defined in Rule 6420, effected under Securities Act Rule 144A, which transactions currently are not subject to the 30-second reporting requirement. *See* Rule 6622(a)(3).

[12] *See, e.g.,* FINRA Rule 6282. *See also* Amendment No. 1.

[13] *Id.*

after execution) may be charged with violating FINRA rules, notwithstanding that they have policies and procedures that contemplate commencing the trade reporting process without delay.[14]

III. Summary of Comment Letters and FINRA's Response

The Commission received five comment letters on the proposed rule change.[15] One commenter supported the proposed rule change.[16] KOR stated that in today's automated market structure, 10 seconds represents a significant amount of time given ''that the exchanges and trading firms commonly measure performance in microseconds.'' KOR stated that complying with this requirement should not represent an undue burden on reporting firms. The other four commenters raised concerns relating to the proposed rule change.

A. Manually Negotiated and Reported Trades

Four commenters raised concerns about the possible impact of the proposed rule change on trades that are manually negotiated and reported.[17] These commenters stated that while manual trading represents a very small percentage of equity trade reporting, for these types of trades, a trader may not be able to manually input and verify trade data within 10 seconds.[18] One commenter asserted that the proposed rule change will disproportionately affect firms that accept orders that are not electronically entered into an order management system (including orders received via telephone or instant message) and will effectively prohibit, by trade reporting rule, an entire category of otherwise appropriate transactions.[19]

FINRA responded that it believes that the proposed rule change is necessary to bring the trade reporting rules in line with current industry practice, as the market becomes more automated and more efficient.[20] Under the proposed rule change, members must have policies and procedures reasonably designed to enable them to comply with the ''as soon as practicable'' requirement and must program systems to commence the trade reporting process without delay upon execution. Where a member has such reasonably designed policies, procedures and systems in place, the member will not be viewed as violating the ''as soon as practicable'' requirement because of delays in trade reporting that are due to extrinsic factors that are not reasonably predictable and where the member does not purposely delay the reporting of the trade.[21] FINRA further stated that members that engage in a pattern or practice of unexcused late reporting (*i.e.,* reporting later than 10 seconds after execution) may be charged with violating FINRA rules, notwithstanding that they have policies and procedures that contemplate commencing the trade reporting process without delay.

FINRA also noted that the universe of trades for which trade details must be entered manually is small, but in Amendment No. 1 proposed to adopt Supplementary Material to provide that in these cases, FINRA will take such factors as the complexity and manual nature of the execution and reporting of the trade into consideration in determining whether ''reasonable justification'' exists for what otherwise might be deemed to be a pattern or practice of late trade reporting.[22] FINRA noted that the proposed Supplementary Material would apply only where the details of a trade must be manually entered or typed into a trade reporting system following execution.

B. Benefits of Proposed Rule Change

Three commenters questioned whether the benefits outweigh the costs of the proposed rule change, given that the vast majority of trades are reported within 10 seconds already.[23] One of the commenters further stated that the proposed rule change should not be approved without a specific regulatory justification and a thoughtful economic analysis.[24]

FINRA responded that it believes that the reasons discussed in the original filing support approval of the proposed rule change,[25] including the potential effect of the current 30-second reporting requirement on the calculation of reference prices under the Limit Up/Limit Down Plan,[26] and the fact that trade reports received 30 seconds after execution are more likely to appear to market participants as violations of the Limit Up/Limit Down Plan and the Order Protection Rule (*i.e.,* trading at a price worse than the best displayed bid or offer, commonly referred to as a ''trade-through'').[27] Additionally, FINRA stated that the proposed rule change will give market participants greater certainty that any trade disseminated as timely reported was executed within the prior 10 seconds, in furtherance of the policy objectives underlying the proposed rule change. FINRA noted that under the 30 second reporting requirement, market participants cannot distinguish among trades reported 10, 20, or 29 seconds after execution, so it is not possible to know if a particular trade reflects the current market for the security. FINRA believes that with the accommodation for manual reporting processes discussed above, the proposed rule change strikes a reasonable balance between promoting the goals of increased automation and efficiency in the marketplace and minimizing the potential burden on member firms of having to make changes to comply with the 10 second reporting requirement.

C. Member Firm Compliance With 10-Second Reporting Requirement During High Volume Periods

Two commenters raised potential queuing issues and question whether firms will be able to comply with the proposed 10-second reporting requirement during regularly occurring periods of high volume such as market open and close, during highly subscribed initial public offerings (''IPOs'') or when a firm is reporting basket trades with a large number of securities.[28]

FINRA responded that under current FINRA Rules 6181 and 6623, unusual market conditions, such as extreme volatility in a security or in the market as a whole, may be considered in determining whether reasonable

[14] FINRA will announce the effective date of the proposed rule change in a *Regulatory Notice* with an implementation period of 120 to 180 days following Commission approval.

[15] *See* note 5, *supra.*

[16] *See* KOR Letter.

[17] *See* GFI Letter, CRT Letter, FIF Letter and SIFMA Letter.

[18] *Id.*

[19] *See* GFI Letter.

[20] *See* FINRA Response.

[21] In Amendment No. 1, FINRA proposed to amend and further clarify the text of the Supplementary Material proposed in the original filing. FINRA proposed to delete the word ''generally'' and to change ''external factors'' to ''extrinsic factors that are not reasonably predictable.''

[22] Pursuant to Rules 6181 and 6623, unexcused late reporting occurs when there are ''repeated reports of executions submitted after the required time period without reasonable justification or exceptional circumstances.'' In Amendment No. 1, FINRA also proposed to amend Rules 6282(a)(6), 6380A(a)(4), 6380B(a)(4) and 6622(a)(4) to include the words ''reasonable justification'' to conform to Rules 6181 and 6623.

[23] *See* GFI Letter, FIF Letter and SIFMA Letter.

[24] *See* SIFMA Letter. The Commission notes that in the proposal FINRA stated that it does not believe that the proposed rule change will result in any burden on competition that is not necessary or appropriate in furtherance of the purposes of the Act.

[25] *See* FINRA Response.

[26] *See* Securities Exchange Act Release No. 67091, 77 FR 33498 (June 6, 2012) (File No. 4–631) (as originally approved, the National Market System Plan to Address Extraordinary Market Volatility, *i.e.,* the Limit Up/Limit Down Plan).

[27] 17 CFR 242.611.

[28] *See* FIF Letter and SIFMA Letter.

justification or exceptional circumstances exists for the late trade reporting.[29] FINRA reiterated that firms are expected to have sufficiently robust systems with adequate capacity to enable them to report within the time frame prescribed by FINRA rules, including during particularly high volume periods such as market open and close. Absent extraordinary circumstances or reasonable justification, a pattern or practice of late trade reporting, for example, at market open generally would not be considered ''excused'' under FINRA rules. FINRA stated that to create a separate standard for trade reporting at market open and close, as one commenter suggested,[30] or to otherwise excuse late trade reporting during such periods, would permit trade reports to be less clearly sequenced at times when transaction information is most important to investors and market participants. FINRA stated that this could obscure undesirable trading patterns such as gaming or other forms of market abuse. In addition, according to FINRA, such an approach would fail to provide firms with the appropriate incentive to devote sufficient resources to trade reporting as promptly as possible during such periods. FINRA concluded that firms must take reasonable steps to ensure that they can report trades within 10 seconds.[31]

D. Member Firm Compliance With 10-Second Reporting Requirement Following Migration to FINRA's Multi-Product Platform (''MPP'')

One commenter questioned whether firms will be able to comply with the proposed 10-second reporting requirement when reporting trades to the ORF [32] following migration to FINRA's new MPP and asserted that introducing new trade reporting requirements before the migration is premature.[33]

FINRA responded that it did not believe that the planned migration of the ORF to the new MPP infrastructure would affect the ability of a firm's automated trade reporting systems to comply with the proposed rule change. According to FINRA, if a firm's systems currently are capable of reporting within 10 seconds, there is nothing about the new platform that would impede this process. In addition, FINRA believes that the proposed implementation period of 120 to 180 days following Commission approval will provide sufficient time for firms to make and test any systems changes that may be required to comply with the proposed rule change. In addition, FINRA recently announced a new timeframe for the migration of the ORF to the MPP which will occur in early 2014.[34] FINRA stated that this schedule change should further alleviate members' concerns regarding the timing of implementation of the proposed rule change. Accordingly, FINRA does not believe that implementation of the proposed rule change should be delayed pending migration of the ORF to the MPP.

IV. Discussion and Commission Findings

After carefully considering the proposal, the comments submitted, and FINRA's response to the comments, the Commission finds that the proposed rule change, as modified by Amendment No. 1, is consistent with the requirements of the Act and the rules and regulations thereunder applicable to a national securities association.[35] In particular, the Commission finds that the proposed rule change is consistent with Section 15A(b)(6) of the Act,[36] which requires, among other things, that FINRA rules be designed to prevent fraudulent and manipulative acts and practices, to promote just and equitable principles of trade, and, in general, to protect investors and the public interest. The Commission has considered the commenters' views on the proposed rule change and believes that FINRA responded appropriately to the concerns raised. Indeed, the Commission believes that the proposal promotes the goals of transparency, consistency in trade reporting and dissemination, and timely reporting by FINRA members.

Furthermore, the Commission believes that the proposal is consistent with Section 11A(a)(1)(C)(iii) of the Act,[37] which sets forth Congress' finding that it is in the public interest and appropriate for the protection of investors and the maintenance of fair and orderly markets to assure the availability to brokers, dealers, and investors of information with respect to quotations and transactions in securities. The Commission believes that these goals are furthered by the proposed changes requiring that members report OTC transactions in NMS stocks and OTC Equity Securities, and cancellations of such transactions, to FINRA as soon as practicable, but no later than 10 seconds, following execution (or cancellation, as applicable). The proposed rule change is reasonably designed to accomplish these goals by shortening the time within which FINRA members must report trades. As FINRA stated in its proposal, timely reporting has become even more critical with the implementation of the Single Stock Circuit Breaker trading pause rules and the Limit Up/Limit Down Plan. These initiatives are triggered by specified movements in stock prices, thus it is even more important that trades be reported in the sequence in which they occur so that a single stock circuit breaker is not triggered off of a trade report that is out of sequence. The regulatory landscape is become increasingly more automated and the the vast majority of trades are now reported in a much shorter period of time than currently required.[38] As noted by one commenter, firms and exchanges measure performance in microseconds.[39]

[29] The rules state that ''[e]xceptional circumstances will be determined on a case-by-case basis and may include instances of system failure by a member or service bureau, or unusual market conditions, such as extreme volatility in a security, or in the market as a whole.'' In its response, FINRA noted that one example of unusual market conditions could be the day of the Russell rebalancing. *See* FINRA Response.

[30] *See* FIF Letter.

[31] In response to the comment regarding IPOs, FINRA noted that, to date, FINRA has not observed a negative effect on trade reporting compliance rates during time periods surrounding highly subscribed IPOs and believes that this will continue to be the case under the proposed rule change.

[32] The Commission notes that the commenter's more general comments regarding ORF migration to the MPP are not germane to this filing and are not addressed here.

[33] *See* FIF Letter.

[34] *See http://www.finra.org/Industry/Compliance/MarketTransparency/ORF/Notices/P239727.*

[35] In approving this proposed rule change, the Commission has considered the proposed rule's impact on efficiency, competition, and capital formation. *See* 15 U.S.C. 78c(f).

[36] 15 U.S.C. 78*o*–3(b)(6).

[37] 15 U.S.C. 78k–1(a)(1)(C)(iii).

[38] For example, FINRA noted that during the period of July 9 through July 13, 2012, 99.96% of last-sale eligible trades were reported within 10 seconds of execution (with a breakdown of 99.97% of OTC trades in NMS stocks and 99.04% of OTC trades in OTC Equity Securities). During the same period, 288 member firms reported one or more OTC trades to FINRA. Of these firms, only 12 were unable to report any of their trades within 10 seconds. Of the 25,251,098 last sale eligible trades reported during this period, the total number of trades reported by these 12 firms was 21 (0.0000831% of the total number of trades). In addition, there were only 22 member firms that were unable to report at least 50% of their last sale eligible trades within 10 seconds (this number includes the 12 firms mentioned above). The total number of trades reported by these 22 firms was 899 (0.0035602% of the total number of trades). The majority of the firms that FINRA spoke to indicated that their business model is not to execute and report trades, but instead to route most of their orders to other firms for execution, while a few other firms indicated that, as a more general matter, they do not trade equities very frequently. FINRA also stated that it believes that the burden of the proposed rule change should be minimal, particularly since FINRA looks to a pattern and practice of late trade reporting and typically does not charge a member for isolated instances of late reporting. *See* Notice, *supra* note 4.

[39] *See* KOR Letter.

However, four commenters asserted that the proposal places an undue burden on firms with processes that are manual in nature.[40] In response to this comment, in Amendment No. 1, FINRA stated that it will take such factors as the complexity and manual nature of the execution and reporting of the trade into consideration in determining whether ''reasonable justification'' exists for what otherwise might be deemed to be a pattern or practice of late trade reporting.[41] The Commission supports FINRA's expectation that members must periodically assess their reporting processes, manual or otherwise, to ensure that they implement the most efficient policies and procedures for trade reporting possible.[42]

Commenters also raised concerns on whether the benefits of the proposed rule change outweigh the costs associated with compliance.[43] In its filing with the Commission, FINRA stated its belief that the proposed rule change will enhance market transparency and price discovery, promote more consistent trade reporting by members and facilitate implementation and further the goals of the Single Stock Circuit Breaker trading pause rules and the Limit Up/Limit Down Plan. Although the Commission acknowledges the potential for firms covered by these new reporting requirements to incur additional compliance burdens and costs, the Commission believes that any such burdens are outweighed by the overall benefits of increased transparency and access to more comprehensive and accurately sequenced trade information in the OTC markets.

Two commenters raised potential queuing issues and question whether firms will be able to comply with the proposed 10-second reporting requirement during regularly occurring periods of high volume such as market open and close, during highly subscribed IPOs or when a firm is reporting basket trades with a large number of securities.[44] The Commission agrees with FINRA's response that under current rules, unusual market conditions, such as extreme volatility in a security or in the market as a whole, may be considered in determining whether reasonable justification or exceptional circumstances exists to explain late trade reporting.[45]

One commenter questioned whether firms will be able to comply with the proposed 10-second reporting requirement when reporting trades to the ORF following migration to FINRA's new MPP and asserted that introducing new trade reporting requirements before the migration is premature.[46] FINRA responded that it did not believe that the planned migration of the ORF to the new MPP infrastructure would affect the ability of a firm's automated trade reporting systems to ensure compliance with the proposed rule change and further elaborated on this justification.[47] The Commission believes that FINRA adequately responded to this concern and additionally notes that the proposed implementation period of 120 to 180 days following Commission approval will provide sufficient time for firms to make and test any systems changes that may be required to comply with the proposed rule change.

Moreover, the Commission shares FINRA's belief that the proposed rule change will enhance market transparency and price discovery, promote more consistent and accurately sequenced trade reporting by members and facilitate implementation and further the goals of the Single Stock Circuit Breaker trading pause rules and the Limit Up/Limit Down Plan. As FINRA stated in submitting its proposal, timely reporting has become even more critical with the implementation of Regulation NMS and these other regulatory initiatives. Additionally, the proposed rule change will lessen the ability of members to withhold important market information from investors and other market participants for competitive or other improper reasons. Going forward, the Commission expects FINRA to monitor the effect of this change and to consider the need to lower the time within which trades must be reported even further.

V. Conclusion

It is therefore ordered, pursuant to Section 19(b)(2) of the Act, that the proposed rule change (SR–FINRA–2013–013), as modified by Amendment No. 1, be, and hereby is, approved.

For the Commission, by the Division of Trading and Markets, pursuant to delegated authority.[48]

Lynn M. Powalski,

Deputy Secretary.

[FR Doc. 2013–11714 Filed 5–16–13; 8:45 am]

BILLING CODE 8011–01–P

[40] *See* note 17, *supra,* and accompanying text.

[41] The Commission notes that FINRA is not proposing a separate standard for designating manual trades as timely versus late for purposes of dissemination. All trades that are reported more than 10 seconds after execution, regardless of whether they are reported automatically or manually, would be identified as late for reporting and dissemination purposes and would not be considered ''last sale'' eligible under the CTA and UTP Plans. *See* FINRA Response and Amendment No. 1.

[42] *See* FINRA Response.

[43] *See* note 23 *supra,* and accompanying text.

[44] *See* note 28, *supra* and accompanying text.

[45] *See* FINRA Response.

[46] *See* note 33, *supra* and accompanying text.

[47] The Commission notes that FINRA has revised its migration schedule; this change will be implemented before the migration to the new platform.

[48] 17 CFR 200.30–3(a)(12).

SECURITIES AND EXCHANGE COMMISSION

[Release No. 34–69566; File No. SR–NASDAQ–2013–075]

Self-Regulatory Organizations; The NASDAQ Stock Market LLC; Notice of Filing and Immediate Effectiveness of a Proposed Rule Change To Remove Pilot Restrictions From NASDAQ's Qualified Market Maker and NBBO Setter Incentive Programs, and To Make Other Changes to NASDAQ's Schedule of Fees and Credits

May 13, 2013.

Pursuant to Section 19(b)(1) of the Securities Exchange Act of 1934 (''Act''),[1] and Rule 19b–4 [2] thereunder, notice is hereby given that on May 1, 2013, The NASDAQ Stock Market LLC (''NASDAQ'' or ''Exchange'') filed with the Securities and Exchange Commission (''SEC'' or ''Commission'') the proposed rule change as described in Items I, II and III, below, which Items have been prepared by NASDAQ. The Commission is publishing this notice to solicit comments on the proposed rule change from interested persons.

I. Self-Regulatory Organization's Statement of the Terms of Substance of the Proposed Rule Change

NASDAQ is proposing to remove the pilot period restriction from its Qualified Market Maker (''QMM'') and NBBO Setter Incentive pricing incentive programs under Rule 7014, to make a minor modification to the QMM program, and to make other changes to NASDAQ's schedule of fees and credits applicable to execution and routing of orders in securities priced at $1 or more per share. The changes pursuant to this proposal are effective upon filing, and the Exchange will implement the proposed rule changes on May 1, 2013.

The text of the proposed rule change is available on the Exchange's Web site at *http://nasdaq.cchwallstreet.com*, at the principal office of the Exchange, and at the Commission's Public Reference Room.

[1] 15 U.S.C. 78s(b)(1).

[2] 17 CFR 240.19b–4.

II. Self-Regulatory Organization's Statement of the Purpose of, and Statutory Basis for, the Proposed Rule Change

In its filing with the Commission, the Exchange included statements concerning the purpose of and basis for the proposed rule change. The text of these statements may be examined at the places specified in Item IV below. The Exchange has prepared summaries, set forth in sections A, B, and C below, of the most significant aspects of such statements.

A. Self-Regulatory Organization's Statement of the Purpose of, and the Statutory Basis for, the Proposed Rule Change

1. Purpose

QMM and NBBO Setter Incentive Programs

In November 2012,[3] NASDAQ introduced two new pricing programs designed to create incentives for members to improve market quality. The programs have been in effect on a pilot basis from November 1, 2012 until April 30, 2013. Effective April 1, 2013, NASDAQ filed several changes to the programs.[4] NASDAQ is now filing to remove the pilot limitation from the programs, while making a minor modification to the QMM Program.

Under the QMM Program, a member may be designated as a QMM with respect to one or more of its MPIDs if:

- The member is not assessed any ''Excess Order Fee'' under Rule 7018 during the month;[5] and
- Through such MPID the member quotes at the national best bid or best offer (''NBBO'') at least 25% of the time during regular market hours[6] in an average of at least 1,000 securities per day during the month.[7]

A member that is a QMM with respect to a particular MPID (a ''QMM MPID'') is eligible to receive certain financial benefits, as described below:

- The QMM may receive an NBBO Setter Incentive credit of $0.0005 with respect to orders that qualify for the NBBO Setter Incentive Program (*i.e.,* displayed orders with a size of at least one round lot that set the NBBO or join another trading center at the NBBO)[8] and that are entered through the QMM MPID; provided that the QMM also has a volume of liquidity provided through the QMM MPID (as a percentage of Consolidated Volume[9]) that exceeds *the lesser of* the volume of liquidity provided through such QMM MPID during the first month in which the MPID qualified as a QMM MPID (as a percentage of Consolidated Volume) *or* 1.0% of Consolidated Volume.[10] If a QMM does not satisfy these volume requirements, it will receive an NBBO Setter Incentive credit of $0.0002 per share executed with respect to orders that qualify for the NBBO Setter Incentive Program.[11]
- The QMM receives a credit of $0.0001 per share executed with respect to all other displayed orders in securities priced at $1 or more per share that provide liquidity and that are entered through a QMM MPID (in addition to any credit payable under Rule 7018).[12]
- The QMM may receive a discount on fees for ports used for entering orders for that MPID, equal to the lesser of the QMM's total fees for such ports or $5,000.[13] As provided in Rule 7015, the specific fees subject to this discount are: (i) all ports using the NASDAQ Information Exchange (''QIX'') protocol,[14] (ii) Financial Information Exchange (''FIX'') trading ports,[15] and (iii) ports using other trading telecommunications protocols.[16]
- For a number of shares not to exceed *the lower of* the number of shares of liquidity provided through a QMM MPID *or* 20 million shares per trading day (the ''Numerical Cap''), NASDAQ charges a fee of $0.0028 per share executed for orders in securities priced at $1 or more per share that access liquidity on the NASDAQ Market Center and that are entered through the same QMM MPID; provided, however, that orders that would otherwise be charged $0.0028 per share executed under Rule 7018 do not count toward the Numerical Cap. For shares above the Numerical Cap, NASDAQ charges the rate otherwise applicable under Rule 7018. Moreover, in order to be charged the execution rate of $0.0028 per share executed, the QMM's volume of liquidity added, provided, and/or routed through the QMM MPID during the month (as a percentage of Consolidated Volume) must be not less than 0.05% lower than the volume of liquidity added, provided, and/or routed through such QMM MPID during the first month in which the MPID qualified as a QMM MPID (as a percentage of Consolidated Volume).[17]

NASDAQ believes that the QMM pilot program has been successful in achieving its goals of improving market quality. Since the inception of the program, thirteen MPIDs have qualified. During April 2013, twelve MPIDs have qualified and have met the 25% quoting requirements of the program in over 4,700 securities. In recent months, NASDAQ's time at the NBBO has increased, with recent data showing NASDAQ at the inside 25% of the time in approximately 5,700 securities, 50% of the time in approximately 4,100 securities, and 75% of the time in approximately 2,100 securities. Moreover, the presence of even one QMM in a stock appears to decrease dramatically the average effective

[3] Securities Exchange Act Release No. 68209 (November 9, 2012), 77 FR 69519 (November 19, 2012) (SR–NASDAQ–2012–126).

[4] Securities Exchange Act Release No. 69376 (April 15, 2013), 78 FR 23611 (April 15, 2013) (SR–NASDAQ–2013–063).

[5] Rule 7018(m). Last year, NASDAQ introduced an Excess Order Fee, aimed at reducing inefficient order entry practices of certain market participants that place excessive burdens on the systems of NASDAQ and its members and that may negatively impact the usefulness and life cycle cost of market data. In general, the determination of whether to impose the fee on a particular MPID is made by calculating the ratio between (i) entered orders, weighted by the distance of the order from the NBBO, and (ii) orders that execute in whole or in part. The fee is imposed on MPIDs that have an ''Order Entry Ratio'' of more than 100.

[6] Defined as 9:30 a.m. through 4:00 p.m., or such shorter period as may be designated by NASDAQ on a day when the securities markets close early (such as the day after Thanksgiving).

[7] A member MPID is considered to be quoting at the NBBO if it has a displayed order at either the national best bid or the national best offer or both the national best bid and offer. On a daily basis, NASDAQ will determine the number of securities in which the member satisfied the 25% NBBO requirement. To qualify for QMM designation, the MPID must meet the requirement for an average of 1,000 securities per day over the course of the month. Thus, if a member MPID satisfied the 25% NBBO requirement in 900 securities for half the days in the month, and satisfied the requirement for 1,100 securities for the other days in the month, it would meet the requirement for an average of 1,000 securities.

[8] The NBBO Setter Incentive program is described in more detail below.

[9] ''Consolidated Volume'' means the consolidated volume reported to all consolidated transaction reporting plans by all exchanges and trade reporting facilities during a month.

[10] The QMM will also receive the $0.0005 per share rate during the first month in which an MPID becomes a QMM MPID.

[11] Orders designated as Designated Retail Orders under Rule 7018(a) are not eligible to receive an NBBO Setter Incentive credit in addition to the credit provided with respect to such orders under Rule 7018(a).

[12] If the QMM also participates in NASDAQ Investor Support Program (the ''ISP'') NASDAQ will pay the greater of any applicable credit under the ISP or the QMM program, but not a credit under both programs. However, Designated Retail Orders are not eligible to receive an NBBO Setter Incentive credit in addition to the credit provided with respect to such orders under Rule 7018(a).

[13] The ports subject to the discount are not used for receipt of market data.

[14] The applicable undiscounted fees are $1,200 per month for a port pair or ECN direct connection port pair, and $1,000 per month for an unsolicited message port. *See* Rule 7015(a).

[15] The applicable undiscounted fee is $500 per port per month. *See* Rule 7015(b).

[16] The applicable undiscounted fee is $500 per port pair per month. *See* Rule 7015(g).

[17] This limitation will not apply during the first month in which an MPID becomes a QMM MPID.

spread in a security, with multiple QMMs increasing the effect. Specifically, the average effective spread of securities with no QMMs was approximately $0.0825 over the pilot period, decreasing to approximately $0.065 for securities with one QMM, approximately $0.0425 for securities with two QMMs, approximately $0.0325 for securities with three QMMs, approximately $0.020 for securities with four QMMs, and approximately $0.015 for securities with five or more QMMs.

In addition to removing the pilot limitation from the QMM Program, NASDAQ proposes to modify the requirement that a QMM must quote at the NBBO at least 25% of the time during regular marker hours in an average of at least 1,000 securities per day during the month. Beginning May 1, 2013, Designated Retail Orders will not be counted in determining whether a member satisfies this requirement. Under the terms of another NASDAQ financial incentive program, a Designated Retail Order is defined as an ''agency or riskless principal order that originates from a natural person and is submitted to Nasdaq by a member that designates it . . . , provided that no change is made to the terms of the order with respect to price or side of market and the order does not originate from a trading algorithm or any other computerized methodology.'' [18] The Designated Retail Order Program is aimed at encouraging market participants that make routing decisions with respect to retail orders to send them to NASDAQ. Because of the origin of such orders, they do not represent market-making activity and the submitting member is not in a position to influence their price. The QMM Program, however, is aimed at encouraging members that submit quotes/orders as market makers or as proprietary traders to adhere to market quality standards by quoting at the NBBO. Accordingly, NASDAQ does not believe that the program's purposes are served by including Designated Retail Orders in the calculations to determine whether a member has satisfied these quoting standards.

Under the NBBO Setter Incentive program, NASDAQ provides an enhanced liquidity provider rebate with respect to displayed liquidity-providing orders that set the NBBO or cause NASDAQ to join another trading center with a protected quotation at the NBBO. The NBBO Setter Incentive credit is paid on a monthly basis, and the amount is determined by multiplying the applicable rate by the number of shares of displayed liquidity provided to which a particular rate applies.[19] A member receives an NBBO Setter Incentive credit at the $0.0001 rate with respect to all shares of displayed liquidity that are executed at a price of $1 or more in the Nasdaq Market Center during a given month if posted through an order that:

- displayed a quantity of at least one round lot at the time of execution; and
- either established the NBBO or was the first order posted on NASDAQ that had the same price as an order posted at another trading center with a protected quotation that established the NBBO.

If the member also provides a daily average volume of at least 5 million shares of liquidity through orders that satisfy the foregoing criteria (*i.e.,* that qualify for an NBBO Setter Incentive credit), it will receive a credit at the $0.0002 rate. Alternatively, a member may receive a credit at the $0.0002 per share executed rate if it is a QMM but does not satisfy certain volume criteria required for a QMM to receive a credit at the $0.0005 per share executed rate.

A member receives an NBBO Setter Incentive credit at the $0.0005 rate with respect to all shares of displayed liquidity that are executed at a price of $1 or more in the NASDAQ Market Center during a given month if posted through an order that:

- displayed a quantity of at least one round lot at the time of execution;
- either established the NBBO or was the first order posted on Nasdaq that had the same price as an order posted at another trading center with a protected quotation that established the NBBO;
- was entered through a QMM MPID; and
- the QMM has a volume of liquidity provided through the QMM MPID (as a percentage of Consolidated Volume) that exceeds the lesser of the volume of liquidity provided through such QMM MPID during the first month in which the MPID qualified as a QMM MPID (as a percentage of Consolidated Volume) or 1.0% of Consolidated Volume.

NASDAQ believes that the NBBO Setter incentive program has achieved its goal of increasing the extent to which NASDAQ sets the NBBO or joins another market that has set the NBBO. Specifically, while the results are subject to daily fluctuation, NASDAQ has seen an upward trend in the extent of quoting and executions at the NBBO as the program has gained traction. Thus, shares of liquidity that set or join the NBBO have increased from a range of approximately 325–400 million in January 2013, to a range of approximately 500–650 million in April 2013. Similarly, shares executed at the NBBO have increased from a range of approximately 105–130 million in January 2013, to a range of approximately 120–180 million in April 2013.

Pricing for Midpoint Orders and Other Non-Displayed Orders

NASDAQ is proposing to adopt a new pricing tier for midpoint pegged and midpoint post only orders (''midpoint orders''). Currently, NASDAQ pays a credit of $0.0017 per share executed for midpoint orders if the member provides an average daily volume of more than 3 million shares through midpoint order during the month and $0.0015 per share executed for midpoint orders if the member provides an average daily volume of 3 million or fewer shares through midpoint orders during the month. While modifying the text of the existing tiers slightly but without making substantive changes to them,[20] NASDAQ is proposing a new tier for members that provide an average daily volume of 5 million or more shares of liquidity through midpoint orders during the month, provided, however, that the member's average daily volume of liquidity provided through midpoint orders during the month is at least 2 million shares more than in April 2013. Thus, the tier includes a requirement for both absolute volume and an increase in volume over a past level. In this respect, the proposed tier is similar to the ''Step-Up'' pricing tier offered by NYSEArca, which requires market participants to exceed volumes during a specified benchmark month.[21]

With respect to non-displayed orders other than midpoint orders, NASDAQ currently provides a credit of $0.0010 per share executed. NASDAQ is proposing to require that members

[18] *See* Rule 7018.

[19] A member is not eligible to receive an NBBO Setter Incentive credit with respect to a Designated Retail Order.

[20] Specifically, NASDAQ is rearranging the location of pricing for midpoint orders and other forms of non-displayed orders to minimize repetition in the fee rule. In addition, NASDAQ is making the $0.0017 per share executed tier apply to members providing a daily average of ''3 million or more shares,'' rather than ''more than 3 million shares.'' NASDAQ does not view this change as substantive since the likelihood of a member providing exactly 3 million share of liquidity per day and thereby being affected by the change is extremely remote. Rather, the change is designed to provide for consistent drafting for all pricing tiers applicable to midpoint orders, including the newly introduced tier for members providing a daily average of 5 million or more shares of liquidity through midpoint orders.

[21] *http://usequities.nyx.com/markets/nyse-arca-equities/trading-fees.*

receiving this credit provide an average daily volume of 1 million or more shares per day through non-displayed orders (including midpoint orders) in order to receive the $0.0010 per share credit. Members not meeting this volume requirement will receive a credit of $0.0005 per share executed for non-displayed orders.[22]

Routing Fees

NASDAQ is proposing selected increases in its fees for routing orders to other trading venues. These changes are intended to ensure that NASDAQ's trading revenues are not unduly impacted by continued low volumes in the cash equities markets, and will primarily have the effect of making fees associated with routing to NASDAQ OMX BX (''BX'') and NASDAQ OMX PSX (''PSX''), NASDAQ's affiliated exchanges, somewhat higher than is currently the case. Specifically:

- NASDAQ currently provides a credit of $0.0005 per share executed for directed orders[23] routed to BX, which NASDAQ proposes to eliminate, such that no charge or credit will apply. Depending on volumes and the nature of the order accessed, BX provides a rebate of $0, $0.0004, $0.0010, or $0.0014 per share executed with respect to orders that access liquidity from its book.
- NASDAQ currently pays a credit of $0.0014 per share executed for TFTY, SOLV, CART, or SAVE[24] orders that execute at BX. NASDAQ proposes to reduce the applicable credit to $0.0004 per share executed.
- NASDAQ current charges $0.0029 per share executed with respect to directed orders that access liquidity at PSX. NASDAQ proposes to increase the charge to $0.0035 per share executed, a fee equal to NASDAQ's existing charge for directed orders that access liquidity on venues other than BX, PSX, or the New York Stock Exchange (''NYSE''). PSX currently charges of a fee of $0.0028 or $0.0030 per share executed with respect to orders that access liquidity on its book.
- NASDAQ currently charges $0.0029 per share executed for SAVE or SOLV orders that execute at venues other than BX, PSX, or NYSE. NASDAQ proposes to increase the applicable charge to $0.0030 per share executed.
- NASDAQ currently charges $0.0027 per share executed for directed orders that are designated as Intermarket Sweep Orders and that execute at NYSE. NASDAQ proposes raising the applicable fee to $0.0029 per share executed. NYSE currently charges NASDAQ $0.0025 per share executed for orders that access liquidity on its book, so the change increases the extent of the markup charged by NASDAQ for routing such orders to NYSE.
- For other directed orders that execute at NYSE, NASDAQ currently charges $0.0026 per share executed for a member that provides an average daily volume of more than 35 million shares of liquidity, and $0.0027 per share executed for other members. NASDAQ proposes raising the applicable fees to $0.0028 and $0.0029 per share executed, respectively.
- For TFTY orders that execute at NYSE, NASDAQ currently charges $0.0024 per share executed. NASDAQ proposes increasing the fee to $0.0025 per share executed.

For DOTI orders that execute at BX,[25] NASDAQ currently passes through applicable fees and/or credits. (As noted above, applicable credits currently range from $0 to $0.0014 per share executed.) NASDAQ proposes to pay a fixed credit of $0.0004 per share executed with respect to such orders.[26]

2. Statutory Basis

NASDAQ believes that the proposed rule change is consistent with the provisions of Section 6 of the Act,[27] in general, and with Sections 6(b)(4) and 6(b)(5) of the Act,[28] in particular, in that it provides for the equitable allocation of reasonable dues, fees and other charges among members and issuers and other persons using any facility or system which NASDAQ operates or controls, and is not designed to permit unfair discrimination between customers, issuers, brokers, or dealers.

NASDAQ believes that the NBBO Setter Incentive program has been successful in encouraging members to add liquidity at prices that benefit all NASDAQ market participants and the NASDAQ market itself, and enhance price discovery, by establishing a new NBBO or allowing NASDAQ to join the NBBO established by another trading center. NASDAQ further believes that the proposal to remove the pilot limitation from the program is reasonable, consistent with an equitable allocation of fees, and not unfairly discriminatory. Specifically, NASDAQ believes that the level of the credits available through the program—$0.0001, $0.0002, or $0.0005 per share executed—is reasonable, in that it does not reflect a disproportionate increase above the rebates provided to all members with respect to the provision of displayed liquidity under Rule 7018. NASDAQ further notes that through the program, NASDAQ reduces fees for members that set the NBBO or join another market at the NBBO. The program is consistent with the Act's requirement for an equitable allocation of fees because members that establish the NBBO or cause NASDAQ to join another market at the NBBO benefit all investors by promoting price discovery and increasing the depth of liquidity available at the inside market. Such members also benefit NASDAQ itself by enhancing its competitiveness as a market that attracts marketable orders. Accordingly, NASDAQ believes that it is consistent with an equitable allocation of fees to pay an enhanced

[22] NASDAQ is also modifying the rule language pertaining to credits for non-displayed orders to remove references to a ''quote/order,'' since all quotes are displayed.

[23] Directed Orders are orders that are directed to an exchange other than NASDAQ, as directed by the entering party, without checking the NASDAQ book. If unexecuted, the order (or unexecuted portion thereof) is returned to the entering party.

[24] TFTY is a routing option under which orders check the NASDAQ System for available shares only if so instructed by the entering firm and are thereafter routed to destinations on the applicable routing table. If shares remain un-executed after routing, they are posted to the book. Once on the book, if the order subsequently is locked or crossed by another market center, the System will not route the order to the locking or crossing market center. SOLV is a routing option under which orders may either (i) route to BX and PSX, check the NASDAQ System, and then route to other destinations on the applicable routing table, or (ii) may check the NASDAQ System first and then route to destinations on the applicable routing table. If shares remain un-executed after routing, they are posted to the book. Once on the book, if the order subsequently is locked or crossed by another accessible market center, the System routes the order to the locking or crossing market center. CART is a routing option under which orders route to BX and PSX and then check the NASDAQ System. If shares remain un-executed, they are posted to the book or cancelled. Once on the book, if the order subsequently is locked or crossed by another market center, the System will not route the order to the locking or crossing market center. SAVE is a routing option under which orders may either (i) route to BX and PSX, check the NASDAQ System, and then route to other destinations on the applicable routing table, or (ii) may check the NASDAQ System first and then route to destinations on the applicable routing table. If shares remain un-executed after routing, they are posted to the book. Once on the book, if the order subsequently is locked or crossed by another market center, the System will not route the order to the locking or crossing market center.

[25] DOTI is a routing option for orders that the entering firm wishes to direct to the NYSE or NYSE MKT without returning to NASDAQ. DOTI orders check the NASDAQ System for available shares and then are sent to destinations on the applicable routing table before being sent to NYSE or NYSE MKT, as appropriate. DOTI orders do not return to the NASDAQ book after routing. The entering firm may alternatively elect to have DOTI orders check the NASDAQ System for available shares and thereafter be directly sent to NYSE or NYSE MKT as appropriate.

[26] NASDAQ is also adding some clarifying language to the rule text relating to fees for DOTI orders.

[27] 15 U.S.C. 78f.

[28] 15 U.S.C. 78f(b)(4) and (5).

rebate in recognition of these benefits to NASDAQ and its market participants. NASDAQ further notes that the program is consistent with an equitable allocation of fees because it is immediately available to all market participants that allow NASDAQ to set or join the NBBO, regardless of the size of the firm or its trading volumes. Finally, NASDAQ believes that the program and the payment of a higher rebate with respect to qualifying orders is not unfairly discriminatory because it is intended to promote the benefits described above, and because the magnitude of the additional rebate is not unreasonably high in comparison to the rebate paid with respect to other displayed liquidity-providing orders.

NASDAQ further believes that the QMM program has been successful at encouraging members to promote price discovery and market quality by quoting at the NBBO for a significant portion of each day in a large number of securities, thereby benefitting NASDAQ and other investors by committing capital to support the execution of orders. With respect to the enhanced NBBO Setter Incentive rebate provided to QMMs, NASDAQ believes that the rebate itself is reasonable, equitable, and not unfairly discriminatory for the reasons discussed above with regard to the NBBO Setter Incentive program. In addition, NASDAQ believes that it is reasonable to pay a higher rebate under that program to QMMs because of the additional commitment to market quality reflected in the quoting requirements associated with being a QMM. Similarly, NASDAQ believes that the higher rebate is consistent with an equitable allocation of fees because a QMM that sets the NBBO is demonstrating both a specific commitment to the market through the NBBO-setting order and a broad commitment through its quoting activity throughout the month. Accordingly, NASDAQ believes that it is consistent with an equitable allocation to pay a higher rebate in comparison with the rebate for other NBBO-setting orders. Finally, NASDAQ believes that this higher rebate is not unfairly discriminatory because it is consistent with the market quality and competitiveness benefits associated with the program and because the magnitude of the additional rebate is not unreasonably high in comparison to the rebate paid with respect to other displayed liquidity-providing orders. NASDAQ further believes that reserving the highest NBBO Setter Incentive Credit of $0.0005 per share executed for QMMs that increase their participation in NASDAQ above a prior benchmark level (or 1.0% of Consolidated Volume) is reasonable because it provides a greater incentive for QMMs to benefit the Exchange and other market participants through high levels of liquidity provision. This aspect of the program is consistent with an equitable allocation of fees because members that contribute significantly to market quality by satisfying the requirements of both the QMM and the NBBO Setter Incentive program while participating actively in the NASDAQ Market Center justifiably earn the higher credit of $0.0005 per share executed. This aspect of the program is not unfairly discriminatory because a QMM that does not achieve the higher requirements may still receive a credit of $0.0002 for orders that set the NBBO, as well as a credit of $0.0001 for other displayed orders (excluding Designated Retail Orders).

NASDAQ believes that the port fee discount for QMMs is consistent with an equitable allocation of fees because the fees for connectivity, such as the ports used for order entry, are a significant component of the overall cost of trading on NASDAQ and other trading venues. Accordingly, to the extent that a member maintains a significant presence in the NASDAQ market through the extent of its quoting at the NBBO, NASDAQ believes that it is equitable to provide the member a discount on this component of its trading costs. NASDAQ further believes that the discount is not unfairly discriminatory, because it is subject to a monthly cap, such that the disparity between the monthly costs of a QMM and another market participant with a similar configuration of order entry ports may not exceed $5,000. Finally, NASDAQ believes that the discount is reasonable because it will result in a fee reduction for members that provide the market quality benefits associated with QMM status.

The aspect of the QMM program that features a $0.0028 per share executed pricing tier for QMMs is reasonable because it provides an incentive for QMMs to maintain their participation in NASDAQ near or above a prior benchmark level. The tier is consistent with an equitable allocation of fees because members that contribute significantly to market quality by satisfying the requirements of the QMM program while participating actively in the NASDAQ Market Center justifiably may be charged a lower fee with respect to order executions. The tier is not unfairly discriminatory because a QMM that does not achieve the higher requirements would pay a fee that is only slightly higher ($0.0029 or $0.0030 per share executed, depending on other aspects of its participation in NASDAQ).

The proposed change to provide that Designated Retail Orders will not be considered when determining whether a QMM has met the NBBO requirements of the program is reasonable because the program is designed to increase the extent to which market makers and other market participants with proprietary trading interest choose to commit capital to support executions at the NBBO; accordingly, the program's goals are not supported by Designated Retail Orders, which do not reflect such trading interest. Moreover, the change is consistent with an equitable allocation of fees and is not unfairly discriminatory because Designated Retail Orders already benefit from a targeted financial incentive program designed to encourage them to be posted in NASDAQ.

The proposed changes with respect to the introduction of a new pricing tier for midpoint orders is reasonable because it will result in a fee reduction for members using these orders to the required extent. As such, it is consistent with pricing tiers established at a range of national securities exchanges under which discounts are dependent on achieving stipulated volume requirements. NASDAQ believes that the proposed tier is consistent with an equitable allocation of fees because use of such orders benefits other market participants to the extent that they execute at the midpoint between the national best bid and best offer and thereby offer price improvement. Accordingly, while NASDAQ's fee schedule reflects incentives for the use of displayed orders, which aid in price discovery, it also reflects a preference for midpoint orders over other forms of non-displayed orders because of these price improvement benefits. The change is not unfairly discriminatory because NASDAQ offers other means by which a member might earn a comparable rebate, including the basic rebate of $0.0020 per share executed paid with respect to displayed orders.

The proposed introduction of a volume-based requirement for members to receive the current credit of $0.0010 per share executed for non-displayed orders, and the proposed reduction in the credit for members not meeting the volume-based requirement, is reasonable because the volume requirement is modest, requiring members to provide an average daily volume of 1 million or more shares using non-displayed orders. Moreover, the changes are reasonable because members are able to receive much

higher rebates using midpoint orders or displayed orders. The changes are consistent with an equitable allocation of fees and not unfairly discriminatory because they are consistent with NASDAQ's stated policy of encouraging the use of displayed orders and midpoint orders, which promote price discovery and price improvement, respectively, rather than non-displayed orders. Accordingly, while NASDAQ offers non-displayed orders to provide members with an option to conceal trading interest when they believe that doing so is to their advantage, nevertheless NASDAQ believes that it is equitable and not unfairly discriminatory for its fees to encourage usage of other order types.

The changes with respect to TFTY, SOLV, CART, SAVE, DOTI and directed orders that execute at BX are reasonable because they will result in members using these routing strategies to access BX receiving a consistent credit of $0.0004 per share executed, which is equivalent to the basic credit paid by BX with respect to orders that access liquidity on BX but that do not achieve BX's volume tiers, or no credit for directed orders, which is consistent with NASDAQ's practice of charging a higher markup for directed orders. Thus, while the change will result in a reduction of credits paid to members using these routing strategies, such members will continue to receive a credit equivalent to that received by many BX members.[29] The change is consistent with an equitable allocation of fees because use of NASDAQ's router and the affected routing strategies is voluntary and members may use other methods to route orders to other execution venues. Accordingly, the change is allocated solely to members that opt to use NASDAQ's router to access BX and that opt to use the routing strategies to which the change applies. In addition, the change is consistent with an equitable allocation and is not unfairly discriminatory because it is consistent with NASDAQ's practice of charging a markup for use of routing services above the fee charged to NASDAQ by the destination market, which allows NASDAQ to cover other costs of operation and to earn a profit.

The change with respect to directed orders that execute at PSX is reasonable because it will make the charge for such orders equal to the charge for directed orders that access liquidity at numerous other venues. The change is consistent with an equitable allocation of fees because use of NASDAQ's router and the use of directed orders is voluntary and members may use other methods to route orders to other execution venues. Accordingly, the change is allocated solely to members that opt to use NASDAQ's router to access PSX using directed orders. In addition, the change is consistent with an equitable allocation and is not unfairly discriminatory because the difference between the fee charged by PSX ($0.0030 per share executed) and the routing fee charged by NASDAQ will be generally consistent with the markup applicable to orders routed to other venues, allowing NASDAQ to cover other costs of operation and to earn a profit.

The change with respect to SAVE or SOLV orders that execute at venues other than BX, PSX, or NYSE is reasonable because it is a small increase of only $0.0001 per share executed. Moreover, depending on the execution venue to which an order is routed, the fee of $0.0030 may be equal to the access fee charged by the recipient market or may reflect a markup. The change is consistent with an equitable allocation of fees because use of NASDAQ's router and the affected routing strategies is voluntary and members may use other methods to route orders to other execution venues. Accordingly, the change is allocated solely to members that opt to use NASDAQ's router and that opt to use the routing strategies in question. In addition, the change is consistent with an equitable allocation and not unfairly discriminatory because it relates to a wide range of trading venues to which NASDAQ may route orders under the SAVE and SOLV strategies. To the extent that the fee reflects a markup above the fees charged by destination venues, it allows NASDAQ to cover other costs of operation and to earn a profit.

The changes with respect to directed orders and TFTY orders routed to NYSE are reasonable because they reflect modest increases of $0.0001 or $0.0002 per share executed to the applicable fees. The modified fees reflect markups of $0.0003 or $0.0004 above the fee of $0.0025 per share executed charged to NASDAQ by NYSE with respect to routed orders, but such markups allow NASDAQ not only to cover the access fees charged to it, but also to cover other costs of operation and to allow a profit. The changes are consistent with an equitable allocation of fees because use of NASDAQ's router and the affected routing strategies is voluntary and members may use other methods to route orders to NYSE. Accordingly, the change is allocated solely to members that opt to use NASDAQ's router to access NYSE using directed orders or the TFTY strategy. The change is not unfairly discriminatory because the difference between the fee charged by NYSE ($0.0025 per share executed) and the routing fee charged by NASDAQ will continue to be lower than the markup applicable to other routed orders, including directed orders sent to certain other trading venues, but will be made more consistent by the change. In addition, the change is consistent with an equitable allocation and not unfairly discriminatory because it is consistent with NASDAQ's practice of charging a markup for use of routing services above the fee charged to NASDAQ by the destination market, which allows NASDAQ to cover other costs of operation and to allow a profit.

B. Self-Regulatory Organization's Statement on Burden on Competition

NASDAQ does not believe that the proposed rule change will result in any burden on competition that is not necessary or appropriate in furtherance of the purposes of the Act, as amended. NASDAQ notes that it operates in a highly competitive market in which market participants can readily favor competing venues if they deem fee levels at a particular venue to be excessive, or rebate opportunities available at other venues to be more favorable. In such an environment, NASDAQ must continually adjust its fees to remain competitive with other exchanges and with alternative trading systems that have been exempted from compliance with the statutory standards applicable to exchanges. Because competitors are free to modify their own fees in response, and because market participants may readily adjust their order routing practices, NASDAQ believes that the degree to which fee changes in this market may impose any burden on competition is extremely limited. In this instance, although some of the proposed changes impose conditions on the availability of certain previously introduced pricing incentives, the incentive programs in question remain in place and are themselves reflective of the need for exchanges to offer significant financial incentives to attract order flow. Similarly, although the proposed rule change includes increases in routing fees and decreases with respect to rebates for non-displayed orders, the

[29] Depending on routed volumes, NASDAQ may receive a credit of $0.0014 per share executed with respect to these orders. However, to the extent that the credit provided to members is lower, it reflects a charge for the use of NASDAQ's routing service, designed to cover other costs of operation and to allow a profit. To this extent, the change is consistent with other existing routing fees that are set in excess of the charges assessed to NASDAQ's router by the destination market.

impact of these changes is limited to voluntary aspects of NASDAQ's services for which numerous alternatives exist. Accordingly, if the changes are unattractive to market participants, it is likely that NASDAQ will lose market share as a result. As a result, NASDAQ does not believe that the proposed changes will impair the ability of members or competing order execution venues to maintain their competitive standing in the financial markets.

C. Self-Regulatory Organization's Statement on Comments on the Proposed Rule Change Received From Members, Participants, or Others

No written comments were either solicited or received.

III. Date of Effectiveness of the Proposed Rule Change and Timing for Commission Action

The foregoing rule change has become effective pursuant to Section 19(b)(3)(A) of the Act [30] and paragraph (f)(2) of Rule 19b-4 thereunder.[31] At any time within 60 days of the filing of the proposed rule change, the Commission summarily may temporarily suspend such rule change if it appears to the Commission that such action is necessary or appropriate in the public interest, for the protection of investors, or otherwise in furtherance of the purposes of the Act.

IV. Solicitation of Comments

Interested persons are invited to submit written data, views, and arguments concerning the foregoing, including whether the proposed rule change is consistent with the Act. Comments may be submitted by any of the following methods:

Electronic Comments

- Use the Commission's Internet comment form (*http://www.sec.gov/rules/sro.shtml*); or
- Send an email to *rule-comments@sec.gov.* Please include File Number SR–NASDAQ–2013–075 on the subject line.

Paper Comments

- Send paper comments in triplicate to Elizabeth M. Murphy, Secretary, Securities and Exchange Commission, 100 F Street NE., Washington, DC 20549–1090.

All submissions should refer to File Number SR–NASDAQ–2013–075. This file number should be included on the subject line if email is used. To help the Commission process and review your comments more efficiently, please use only one method. The Commission will post all comments on the Commission's Internet Web site (*http://www.sec.gov/rules/sro.shtml*). Copies of the submission, all subsequent amendments, all written statements with respect to the proposed rule change that are filed with the Commission, and all written communications relating to the proposed rule change between the Commission and any person, other than those that may be withheld from the public in accordance with the provisions of 5 U.S.C. 552, will be available for Web site viewing and printing in the Commission's Public Reference Room, 100 F Street NE., Washington, DC 20549, on official business days between the hours of 10:00 a.m. and 3:00 p.m. Copies of the filing also will be available for inspection and copying at the principal office of the Exchange. All comments received will be posted without change; the Commission does not edit personal identifying information from submissions. You should submit only information that you wish to make available publicly. All submissions should refer to File Number SR–NASDAQ–2013–075 and should be submitted on or before June 7, 2013.

For the Commission, by the Division of Trading and Markets, pursuant to delegated authority.[32]

Kevin M. O'Neill,

Deputy Secretary.

[FR Doc. 2013–11775 Filed 5–16–13; 8:45 am]

BILLING CODE 8011–01–P

[30] 15 U.S.C. 78s(b)(3)(A).

[31] 17 CFR 240.19b–4(f)(2).

[32] 17 CFR 200.30–3(a)(12).

SECURITIES AND EXCHANGE COMMISSION

[File No. 500–1]

Avani International Group, Inc., Birch Mountain Resources Ltd., Capital Reserve Canada Ltd., Dynasty Gaming, Inc. (n/k/a Blue Zen Memorial Parks, Inc.), IXI Mobile, Inc., Laureate Resources & Steel Industries Inc., Millennium Energy Corp., Shannon International, Inc., and Welwind Energy International Corporation; Order of Suspension of Trading

May 15, 2013.

It appears to the Securities and Exchange Commission that there is a lack of current and accurate information concerning the securities of Avani International Group, Inc. because it has not filed any periodic reports since the period ended September 30, 2010.

It appears to the Securities and Exchange Commission that there is a lack of current and accurate information concerning the securities of Birch Mountain Resources Ltd. because it has not filed any periodic reports since the period ended December 31, 2007.

It appears to the Securities and Exchange Commission that there is a lack of current and accurate information concerning the securities of Capital Reserve Canada Ltd. because it has not filed any periodic reports since the period ended December 31, 2009.

It appears to the Securities and Exchange Commission that there is a lack of current and accurate information concerning the securities of Dynasty Gaming, Inc. (n/k/a Blue Zen Memorial Parks, Inc.) because it has not filed any periodic reports since the period ended December 31, 2007.

It appears to the Securities and Exchange Commission that there is a lack of current and accurate information concerning the securities of IXI Mobile, Inc. because it has not filed any periodic reports since the period ended June 30, 2008.

It appears to the Securities and Exchange Commission that there is a lack of current and accurate information concerning the securities of Laureate Resources & Steel Industries, Inc. because it has not filed any periodic reports since the period ended August 31, 2009.

It appears to the Securities and Exchange Commission that there is a lack of current and accurate information concerning the securities of Millennium Energy Corp. because it has not filed any periodic reports since the period ended September 30, 2009.

It appears to the Securities and Exchange Commission that there is a lack of current and accurate information concerning the securities of Shannon International, Inc. because it has not filed any periodic reports since the period ended September 30, 2006.

It appears to the Securities and Exchange Commission that there is a lack of current and accurate information concerning the securities of Welwind Energy International Corp. because it has not filed any periodic reports since the period ended September 30, 2010.

The Commission is of the opinion that the public interest and the protection of investors require a suspension of trading in the securities of the above-listed companies. Therefore, it is ordered, pursuant to Section 12(k) of the Securities Exchange Act of 1934, that trading in the securities of the above-listed companies is suspended for the period from 9:30 a.m. EDT on May 15,

2013, through 11:59 p.m. EDT on May 29, 2013.

By the Commission.

Lynn M. Powalski,

Deputy Secretary.

[FR Doc. 2013–11917 Filed 5–15–13; 4:15 pm]

BILLING CODE 8011–01–P

SECURITIES AND EXCHANGE COMMISSION

[File No. 500–1]

In the Matter of Griffin Mining, Inc., Power Sports Factory, Inc., Star Energy Corp., TransNet Corp., Valcom, Inc., and Vibe Records, Inc.; Order of Suspension of Trading

May 15, 2013.

It appears to the Securities and Exchange Commission that there is a lack of current and accurate information concerning the securities of Griffin Mining, Ltd. because it has not filed any periodic reports since it filed an amended registration statement on December 7, 1998.

It appears to the Securities and Exchange Commission that there is a lack of current and accurate information concerning the securities of Power Sports Factory, Inc. because it has not filed any periodic reports since the period ended March 31, 2010.

It appears to the Securities and Exchange Commission that there is a lack of current and accurate information concerning the securities of Star Energy Corp. because it has not filed any periodic reports since the period ended September 30, 2008.

It appears to the Securities and Exchange Commission that there is a lack of current and accurate information concerning the securities of TransNet Corp. because it has not filed any periodic reports since the period ended March 31, 2011.

It appears to the Securities and Exchange Commission that there is a lack of current and accurate information concerning the securities of Valcom, Inc. because it has not filed any periodic reports since the period ended June 30, 2011.

It appears to the Securities and Exchange Commission that there is a lack of current and accurate information concerning the securities of Vibe Records, Inc. because it has not filed any periodic reports since the period ended September 30, 2010.

The Commission is of the opinion that the public interest and the protection of investors require a suspension of trading in the securities of the above-listed companies.

Therefore, it is ordered, pursuant to Section 12(k) of the Securities Exchange Act of 1934, that trading in the securities of the above-listed companies is suspended for the period from 9:30 a.m. EDT on May 15, 2013, through 11:59 p.m. EDT on May 29, 2013.

By the Commission.

Lynn M. Powalski,

Deputy Secretary.

[FR Doc. 2013–11915 Filed 5–15–13; 4:15 pm]

BILLING CODE 8011–01–P

SECURITIES AND EXCHANGE COMMISSION

[File No. 500–1]

Benda Pharmaceutical, Inc. and China Shuangjii Cement Ltd., Order of Suspension of Trading

May 15, 2013.

It appears to the Securities and Exchange Commission that there is a lack of current and accurate information concerning the securities of Benda Pharmaceutical, Inc. because it has not filed any periodic reports since the period ended September 30, 2010.

It appears to the Securities and Exchange Commission that there is a lack of current and accurate information concerning the securities of China Shuangji Cement Ltd. because it has not filed any periodic reports since the period ended September 30, 2010.

The Commission is of the opinion that the public interest and the protection of investors require a suspension of trading in the securities of the above-listed companies. Therefore, it is ordered, pursuant to Section 12(k) of the Securities Exchange Act of 1934, that trading in the securities of the above-listed companies is suspended for the period from 9:30 a.m. EDT on May 15, 2013, through 11:59 p.m. EDT on May 29, 2013.

By the Commission.

Lynn M. Powalski,

Deputy Secretary.

[FR Doc. 2013–11916 Filed 5–15–13; 4:15 pm]

BILLING CODE 8011–01–P

DEPARTMENT OF STATE

[Public Notice 8326]

Advisory Committee for the Study of Eastern Europe and the Independent States of the Former Soviet Union; Notice of Committee Renewal

I. Renewal of Advisory Committee. The Department of State has renewed the Charter of the Advisory Committee for the Study of Eastern Europe and the Independent States of the Former Soviet Union. This advisory committee makes recommendations to the Secretary of State on funding for applications submitted for the Research and Training Program on Eastern Europe and the Independent States of the Former Soviet Union (Title VIII). These applications are submitted in response to an annual open competition among U.S. national organizations with interest and expertise administering research and training programs in the Eurasian and East European fields. The program seeks to build and sustain U.S. expertise on these regions through support for advanced graduate training, language training, and postdoctoral research.

The committee includes representatives of the Secretaries of Defense and Education, the Librarian of Congress, and the Presidents of the American Association for Slavic, East European and Eurasian Studies and the Association of American Universities. The Assistant Secretary for Intelligence and Research chairs the advisory committee for the Secretary of State. The committee meets at least once annually to recommend grant policies and recipients.

For further information, please call Anita Bristol, U.S. Department of State, (202) 736–4572.

Dated: April 19, 2013.

Susan H. Nelson,

Executive Director, Advisory Committee for Study of Eastern Europe and the Independent States of the Former Soviet Union.

[FR Doc. 2013–11874 Filed 5–16–13; 8:45 am]

BILLING CODE 4710–32–P

DEPARTMENT OF STATE

[Public Notice 8324]

In the Matter of the Designation of Abu Muhammad al-Jawlani Also Known as al-Fatih Also Known as Abu Muhammad al-Golani as a Specially Designated Global Terrorist Pursuant to Section 1(b) of Executive Order 13224, as Amended

Acting under the authority of and in accordance with section 1(b) of Executive Order 13224 of September 23, 2001, as amended by Executive Order 13268 of July 2, 2002, and Executive Order 13284 of January 23, 2003, I hereby determine that the individual known as Abu Muhammd al-Jawlani, also known al-Fatih, also known as Abu Muhammad al-Golani, committed, or poses a significant risk of committing, acts of terrorism that threaten the security of U.S. nationals or the national

security, foreign policy, or economy of the United States.

Consistent with the determination in Section 10 of Executive Order 13224 that ''prior notice to persons determined to be subject to the Order who might have a constitutional presence in the United States would render ineffectual the blocking and other measures authorized in the Order because of the ability to transfer funds instantaneously,'' I determine that no prior notice needs to be provided to any person subject to this determination who might have a constitutional presence in the United States, because to do so would render ineffectual the measures authorized in the Order.

This notice shall be published in the **Federal Register**.

Dated: April 16, 2013.

John F. Kerry,

Secretary of State.

[FR Doc. 2013–11875 Filed 5–16–13; 8:45 am]

BILLING CODE 4710–10–P

DEPARTMENT OF STATE

[Public Notice 8328]

Notice of Availability of Finding of No Significant Impact for the Proposed Vantage Pipeline US LP Ethane Pipeline Project

SUMMARY: The purpose of this notice is to inform the public of the availability of the Department of State's Finding of No Significant Impact on the proposed Vantage Pipeline US LP Ethane Pipeline Project. Under E.O. 13337, the Secretary of State is authorized to issue Presidential Permits for the construction, connection, operation, or maintenance at the borders of the United States, of facilities for the exportation or importation of liquid petroleum, petroleum products, or other non-gaseous fuels to or from a foreign country. Vantage Pipeline US LP (Vantage) has applied to the Department of State (the Department) for a Presidential Permit authorizing it to develop and maintain a new pipeline facility at the U.S.-Canada international boundary, a Cross Border Facility, near Fortuna, Divide County, North Dakota.

Vantage proposes to construct, operate, and maintain a high vapor pressure pipeline that would carry ethane from a source near Tioga, North Dakota, United States, northwest through Saskatchewan, Canada, to a site near Empress, Alberta, Canada. The pipeline would link a growing supply of ethane from North Dakota to markets in Alberta, Canada. The entire proposed Vantage Pipeline in the United States would consist of the installation of approximately 79.8 miles of new 10-inch-diameter pipeline in Williams and Divide Counties, North Dakota; the installation of associated aboveground mainline block valves; and the use of access roads and pipe storage and contractor yards.

Consistent with NEPA (42 U.S.C. 4321, *et seq.*), the regulations of the Council on Environmental Quality (40 CFR parts 1500–1508), and the Department's implementing regulations (22 CFR part 161, and in particular 22 CFR 161.7(c)), the Department of State has found that issuance of a Presidential Permit authorizing the construction, connection, operation, and maintenance of the Cross Border Facility would not have a significant impact on the quality of the human environment. The Finding of No Significant Impact was signed by the Department on May 13, 2013.

This Finding of No Significant Impact is not a decision on the Presidential Permit application. In accordance with E.O. 13337, the Department will now proceed to make a determination as to whether issuance of a Presidential Permit for the border facilities of Vantage's proposed Ethane Pipeline Project would serve the national interest.

The Finding of No Significant Impact is available from the Department on the Vantage Pipeline Project Web site. The following link leads to the posted Vantage Finding of No Significant Impact: *http://www.vantagepipeline.state.gov/dosdocuments.html*.

FOR FURTHER INFORMATION CONTACT: Genevieve Walker, Office of Environmental Quality and Transboundary Issues, Department of State, 2201 C Street NW., Washington DC 20520, Tel: 202–647–9798; EMAIL: *walkerg@state.gov*.

Persons with access to the Internet may view this notice by going to the regulations.gov Web site and searching on docket number DOS–2013–0010.

Dated: May 13, 2013.

George N. Sibley,

Director, Office of Environmental Quality and Transboundary Issues, Department of State.

[FR Doc. 2013–11877 Filed 5–16–13; 8:45 am]

BILLING CODE 4710–09–P

DEPARTMENT OF STATE

[Public Notice 8325]

Shipping Coordinating Committee; Notice of Committee Meeting

The Shipping Coordinating Committee (SHC) will conduct an open meeting at 9:30 a.m. on Thursday, June 6, in Room 6103, of the United States Coast Guard Headquarters Building, 2100 Second Street, SW., Washington, DC 20593–7126. The primary purpose of the meeting is to prepare for the ninety-first Session of the International Maritime Organization's (IMO) Marine Safety Committee to be held at the IMO Headquarters, London, England, United Kingdom, June 12–21, 2012.

The matters to be considered include:

- Adoption of the agenda; report on credentials
- Decisions of other IMO bodies
- Consideration and adoption of amendments to mandatory instruments
- Measures to enhance maritime security
- Goal-based new ship construction standards
- LRIT-related matters
- Passenger ship safety
- Making the Polar Code mandatory
- Radiocommunications and search and rescue (report of the sixteenth session of the Sub-Committee)
- Flag State implementation (report of the twentieth session of the Sub-Committee)
- Training and Watchkeeping (report of the forty-third session of the Sub-Committee)
- Safety of navigation (report of the fifty-eighth session of the Sub-Committee)
- Dangerous goods, solid cargoes and containers (urgent matters emanating from the seventeenth session of the Sub-Committee)
- Technical co-operation activities relating to maritime safety and security
- Capacity-building for the implementation of new measures
- Formal safety assessment
- Piracy and armed robbery against ships
- Implementation of instruments and related matters
- Work programme
- Election of Chairman and Vice-Chairman for 2013
- Any other business
- Consideration of the report of the Committee on its ninety-first session

Members of the public may attend this meeting up to the seating capacity of the room. To facilitate the building security process, and to request reasonable accommodation, those who plan to attend should contact the meeting coordinator, LCDR Matthew Frazee, by email at *imo@uscg.mil;* by phone at (202) 372–1376; or in writing at Commandant (CG–5PS), U.S. Coast Guard, 2100 2nd Street SW., Stop 7126, Washington, DC 20593–7126. Requests should be made no later than November 9, 2012. Requests made after this date

might not be able to be accommodated. Please note that due to security considerations, two valid, government issued photo identifications must be presented to gain entrance to the Headquarters building. The Headquarters building is accessible by taxi and privately owned conveyance (public transportation is not generally available), however, parking in the vicinity of the building is extremely limited. Additional information regarding this and other IMO SHC public meetings may be found at: *www.uscg.mil/imo*.

Dated: May 13, 2013.

Brian Robinson,

Executive Secretary, Shipping Coordinating Committee, Department of State.

[FR Doc. 2013–11876 Filed 5–16–13; 8:45 am]

BILLING CODE 4710–09–P

DEPARTMENT OF TRANSPORTATION

Federal Highway Administration

Environmental Impact Statement: Grand Forks County, North Dakota and Polk County, Minnesota

AGENCY: Federal Highway Administration (FHWA), DOT.

ACTION: Notice of intent.

SUMMARY: The FHWA is issuing this notice to advise the public that an environmental impact statement will be prepared for a proposed highway project in Grand Forks County, North Dakota and Polk County, Minnesota.

FOR FURTHER INFORMATION CONTACT: Mark Schrader, Environment and Right-of-Way Engineer, Federal Highway Administration, North Dakota Division Office, 1471 Interstate Loop, Bismarck, North Dakota 58503, Telephone: (701) 221–9464. Sheri G. Lares, Environmental Section Leader, North Dakota Department of Transportation, 608 E. Boulevard Avenue, Bismarck, North Dakota 58505–0700, Telephone: (701) 328–2188.

SUPPLEMENTARY INFORMATION: The FHWA, in cooperation with the North Dakota and Minnesota Departments of Transportation, will prepare an environmental impact statement (EIS) on a proposal to rehabilitate or replace the historic Sorlie Bridge over the Red River between Grand Forks, North Dakota and East Grand Forks, Minnesota.

Preliminary alternatives currently under consideration include (1) Taking no action to rehabilitate or replace the historic bridge; (2) rehabilitating the bridge on the existing alignment; (3) removal of the bridge and constructing a new bridge on the existing alignment; (4) rehabilitating the bridge and constructing a new bridge on new alignment; and (5) removal of the bridge and constructing a new bridge on new alignment.

Letters describing the proposed action and soliciting comments will be sent to appropriate Federal, State, regional and local agencies, and to private organizations and citizens who previously have expressed, or are known to have, an interest in this project. Two public scoping meetings will be held during the 60 day scoping period. There will be one held in Grand Forks on June 12, 2013 at the City Hall from 5 p.m. until 8 p.m., and the other in East Grand Forks on June 13, 2013 from 5 p.m. until 8 p.m. Locations of the public scoping meetings for the proposed project will be advertised in local newspapers and other media and will be hosted by the North Dakota and Minnesota Departments of Transportation.

To ensure that the full range of issues related to this proposed action are addressed and all significant issues identified, comments and suggestions are invited from all interested parties. Comments or questions concerning this proposed action and the EIS should be directed to the FHWA at the address provided above.

(Catalog of Federal Domestic Assistance Program Number 20.205, Highway Research, Planning, and Construction. The regulations implementing Executive Order 12372 regarding intergovernmental consultation on Federal programs and activities apply to this program.)

Issued on: May 13, 2013.

Wendall L. Meyer,

Division Administrator, Federal Highway Administration, North Dakota Division Office.

[FR Doc. 2013–11779 Filed 5–16–13; 8:45 am]

BILLING CODE 4910–22–P

DEPARTMENT OF TRANSPORTATION

Federal Railroad Administration

[Docket No. FRA 2013–0002–N–11]

Proposed Agency Information Collection Activities; Comment Request

AGENCY: Federal Railroad Administration (FRA), Department of Transportation.

ACTION: Notice and request for comments.

SUMMARY: In accordance with the Paperwork Reduction Act of 1995 and its implementing regulations, the Federal Railroad Administration (FRA) hereby announces that it is seeking approval of the following proposed information collection activities. Before submitting this proposed information collection request (ICR) for clearance by the Office of Management and Budget (OMB), FRA is soliciting public comment on specific aspects of the activities identified below.

DATES: Comments must be received no later than July 16, 2013.

ADDRESSES: Submit written comments on any or all of the following proposed activities by mail to either: Mr. Robert Brogan, Office of Safety, Planning and Evaluation Division, RRS–21, Federal Railroad Administration, 1200 New Jersey Ave. SE., Mail Stop 25, Washington, DC 20590, or Ms. Kimberly Toone, Office of Information Technology, RAD–20, Federal Railroad Administration, 1200 New Jersey Ave. SE., Mail Stop 35, Washington, DC 20590. Commenters requesting FRA to acknowledge receipt of their respective comments must include a self-addressed stamped postcard stating, ''Comments on OMB control number 2130-New'' and should also include the title of the collection of information. Alternatively, comments may be transmitted via facsimile to (202) 493–6216 or (202) 493–6497, or via email to Mr. Brogan at *Robert.Brogan@dot.gov,* or to Ms. Toone at *Kim.Toone@dot.gov.* Please refer to the assigned OMB control number in any correspondence submitted. FRA will summarize comments received in response to this notice in a subsequent notice and include them in its information collection submission to OMB for approval.

FOR FURTHER INFORMATION CONTACT: Mr. Robert Brogan, Office of Planning and Evaluation Division, RRS–21, Federal Railroad Administration, 1200 New Jersey Ave. SE., Mail Stop 25, Washington, DC 20590 (telephone: (202) 493–6292) or Ms. Kimberly Toone, Office of Information Technology, RAD–20, Federal Railroad Administration, 1200 New Jersey Ave. SE., Mail Stop 35, Washington, DC 20590 (telephone: (202) 493–6132). (These telephone numbers are not toll-free.)

SUPPLEMENTARY INFORMATION: The Paperwork Reduction Act of 1995 (PRA), Public Law 104–13, § 2, 109 Stat. 163 (1995) (codified as revised at 44 U.S.C. 3501–3520), and its implementing regulations, 5 CFR part 1320, require Federal agencies to provide 60-days notice to the public for comment on information collection activities before seeking approval for reinstatement or renewal by OMB. 44 U.S.C. 3506(c)(2)(A); 5 CFR 1320.8(d)(1),

1320.10(e)(1), 1320.12(a). Specifically, FRA invites interested respondents to comment on the following summary of proposed information collection activities regarding (i) Whether the information collection activities are necessary for FRA to properly execute its functions, including whether the activities will have practical utility; (ii) the accuracy of FRA's estimates of the burden of the information collection activities, including the validity of the methodology and assumptions used to determine the estimates; (iii) ways for FRA to enhance the quality, utility, and clarity of the information being collected; and (iv) ways for FRA to minimize the burden of information collection activities on the public by automated, electronic, mechanical, or other technological collection techniques or other forms of information technology (*e.g.,* permitting electronic submission of responses). *See* 44 U.S.C. 3506(c)(2)(A)(I)–(iv); 5 CFR 1320.8(d)(1)(I)–(iv). FRA believes that soliciting public comment will promote its efforts to reduce the administrative and paperwork burdens associated with the collection of information mandated by Federal regulations. In summary, FRA reasons that comments received will advance three objectives: (i) Reduce reporting burdens; (ii) ensure that it organizes information collection requirements in a ''user friendly'' format to improve the use of such information; and (iii) accurately assess the resources expended to retrieve and produce information requested. *See* 44 U.S.C. 3501.

Below is a brief summary of the proposed Information Collection Request (ICR) that FRA will submit for clearance by OMB as required under the PRA:

Title: Electronic Device Distraction: Test of Peer to Peer Intervention Combined With Social Marketing.

OMB Control Number: 2130–New.

Abstract: Operating railroad equipment while being distracted by the use of electronic devices (e.g., phones, game consoles, personal computers, etc.) is known to be a factor in some accidents and suspected of being the cause of many others in the railroad industry. It is also known that such use is dangerous, as evidenced by several high profile accidents in the railroad industry, and by research on distraction in other transportation modes. Consequently, the Department of Transportation (DOT) and the Federal Railroad Administration (FRA) have a keen interest in devising counter measures to reduce the incidence of electronic device distraction (EDD) in the railroad industry. One promising approach is to combine peer-to-peer conversations with an effort to change the culture with respect to the acceptability of EDD. FRA is initiating a small scale test of this approach at the Harrisburg Yard of the Norfolk Southern Railroad. As part of its efforts, an evaluation is taking place to determine if the approach works and what will be needed to scale it up to other sites in the railroad industry. As part of the test, it will be necessary to conduct face-to-face interviews with three respondent groups. They are: (1) Members of participating crafts and supervisors at the pilot site; (2) Norfolk Southern personnel involved in implementing and managing the pilot; (3) Project team members in the organizations contracted to assist with the pilot. The majority of interviews will be face-to-face.

Form Number(s): FRA F 6180.160.

Affected Public: Railroad Employees.

Respondent Universe: 480 Railroad Employees.

Frequency of Submission: On occasion.

REPORTING BURDEN

Respondent group	Respondent universe	Total annual responses	Average time per response (minutes)	Total annual burden hours
Pilot Site Personnel	450 Railroad Employees	50 forms/questionnaires	30	25
Norfolk Southern Personnel involved in implementing and managing the pilot.	15 Railroad Employees	15 forms/questionnaires	30	8
Project Team Members	15 AARs/Fulcrum/Aubrey Daniels Personnel.	15 forms/questionnaires	30	8

Total Responses: 80.

Estimated Total Annual Burden: 41 hours.

Type of Request: Approval of a New Information Collection.

Status: Regular Review.

Pursuant to 44 U.S.C. 3507(a) and 5 CFR 1320.5(b), 1320.8(b)(3)(vi), FRA informs all interested parties that it may not conduct or sponsor, and a respondent is not required to respond to, a collection of information unless it displays a currently valid OMB control number.

Authority: 44 U.S.C. 3501–3520.

Issued in Washington, DC on May 8, 2013.

Rebecca Pennington,

Chief Financial Officer, Federal Railroad Administration.

[FR Doc. 2013–11792 Filed 5–16–13; 8:45 am]

BILLING CODE 4910–06–P

DEPARTMENT OF TRANSPORTATION

Federal Transit Administration

[FTA Docket No. FTA–2013–0024]

Notice of Request for Revisions of an Information Collection

AGENCY: Federal Transit Administration, DOT.

ACTION: Notice of request for comments.

SUMMARY: The Federal Transit Administration invites public comments about our intention to request the Office of Management and Budget's (OMB) to approve the revisions of the following information collection: 49 U.S.C. 5317, New Freedom Program. The information to be collected will be used to accumulate mass transportation financial and operating information using a uniform system of accounts and records. The **Federal Register** Notice with a 60-day comment period soliciting comments was published on March 6, 2013.

DATES: Comments must be submitted before June 17, 2013. A comment to OMB is most effective if OMB receives it within 30 days of publication.

FOR FURTHER INFORMATION CONTACT: LaStar Matthews, Office of Administration, Office of Management Planning, (202) 366–2295.

SUPPLEMENTARY INFORMATION:

Title: 49 U.S.C. Section 5317, New Freedom Program

(OMB Number: 2132–0565)

Abstract: 49 U.S.C. 5317, the New Freedom Program, authorizes the Secretary of Transportation to make grants to states for areas with a

population of less than 200,000 and designated recipients in urbanized areas of 200,000 persons or greater to reduce barriers to transportation services and expand the transportation mobility options available to people with disabilities beyond the requirements of the Americans with Disabilities Act (ADA) of 1990. Grant recipients are required to make information available to the public and to publish a program of projects which identifies the subrecipients and projects for which the State or designated recipient is applying for financial assistance. FTA uses the information to determine eligibility for funding and to monitor the grantees' progress in implementing and completing project activities. FTA collects performance information annually from designated recipients in rural areas, small urbanized areas, other direct recipients for small urbanized areas, and designated recipients in urbanized areas of 200,000 persons or greater. FTA collects milestone and financial status reports from designated recipients in large urbanized areas on a quarterly basis. The information submitted ensures FTA's compliance with applicable federal laws and OMB Circular A–102.

Estimated Total Annual Burden: 129,679 hours.

ADDRESSES: All written comments must refer to the docket number that appears at the top of this document and be submitted to the Office of Information and Regulatory Affairs, Office of Management and Budget, 725–17th Street NW., Washington, DC 20503, Attention: FTA Desk Officer.

Comments are Invited On: Whether the proposed collection of information is necessary for the proper performance of the functions of the Department, including whether the information will have practical utility; the accuracy of the Department's estimate of the burden of the proposed information collection; ways to enhance the quality, utility, and clarity of the information to be collected; and ways to minimize the burden of the collection of information on respondents, including the use of automated collection techniques or other forms of information technology.

Issued: May 14, 2013.

Matthew M. Crouch,

Deputy Associate Administrator for Administration.

[FR Doc. 2013–11790 Filed 5–16–13; 8:45 am]

BILLING CODE 4910–57–P

DEPARTMENT OF TRANSPORTATION

Federal Transit Administration

[FTA Docket No. FTA–2013–0025]

Notice of Request for Revisions of an Information Collection

AGENCY: Federal Transit Administration, DOT.

ACTION: Notice of request for comments.

SUMMARY: In accordance with the Paperwork Reduction Act of 1995, this notice announces the intention of the Federal Transit Administration (FTA) to request the Office of Management and Budget (OMB) to approve the revisions of the following information collection: Transit Investments in Greenhouse Gas and Energy Reduction Program.

DATES: Comments must be submitted before July 16, 2013.

ADDRESSES: To ensure that your comments are not entered more than once into the docket, submit comments identified by the docket number by only one of the following methods:

1. *Web site: www.regulations.gov.* Follow the instructions for submitting comments on the U.S. Government electronic docket site. (Note: The U.S. Department of Transportation's (DOT's) electronic docket is no longer accepting electronic comments.) All electronic submissions must be made to the U.S. Government electronic docket site at *www.regulations.gov.* Commenters should follow the directions below for mailed and hand-delivered comments.

2. *Fax:* 202–366–7951.

3. *Mail:* U.S. Department of Transportation, 1200 New Jersey Avenue SE., Docket Operations, M–30, West Building, Ground Floor, Room W12–140, Washington, DC 20590–0001.

4. *Hand Delivery:* U.S. Department of Transportation, 1200 New Jersey Avenue SE., Docket Operations, M–30, West Building, Ground Floor, Room W12–140, Washington, DC 20590–0001 between 9:00 a.m. and 5:00 p.m., Monday through Friday, except federal holidays.

Instructions: You must include the agency name and docket number for this notice at the beginning of your comments. Submit two copies of your comments if you submit them by mail. For confirmation that FTA has received your comments, include a self-addressed stamped postcard. Note that all comments received, including any personal information, will be posted and will be available to Internet users, without change, to *www.regulations.gov.* You may review DOT's complete Privacy Act Statement in the **Federal Register** published April 11, 2000, (65 FR 19477), or you may visit *www.regulations.gov.* Docket: For access to the docket to read background documents and comments received, go to *www.regulations.gov* at any time. Background documents and comments received may also be viewed at the U.S. Department of Transportation, 1200 New Jersey Avenue SE., Docket Operations, M–30, West Building, Ground Floor, Room W12–140, Washington, DC 20590–0001 between 9:00 a.m. and 5:00 p.m., Monday through Friday, except federal holidays.

FOR FURTHER INFORMATION CONTACT: Mr. Matthew Lesh, Office of Research, Demonstration and Innovation, (202) 366–0953, or email at: *Matthew.Lesh@dot.gov.*

SUPPLEMENTARY INFORMATION: Interested parties are invited to send comments regarding any aspect of this information collection, including: (1) The necessity and utility of the information collection for the proper performance of the functions of the FTA; (2) the accuracy of the estimated burden; (3) ways to enhance the quality, utility, and clarity of the collected information; and (4) ways to minimize the collection burden without reducing the quality of the collected information. Comments submitted in response to this notice will be summarized and/or included in the request for OMB approval of this information collection.

Title: Transit Investments in Greenhouse Gas and Energy Reduction Program

(OMB Number: 2132–0566)

Background: The American Recovery and Reinvestment Act of 2009 (ARRA) established the Transit Investments in Greenhouse Gas and Energy Reduction (TIGGER) Program with $100 million in new discretionary grant program funding to support public transit agencies in making capital investments that would assist in the reduction of energy consumption or greenhouse gas emissions within their public transportation systems. In two subsequent years, The Transportation, Housing and Urban Development, Related Agencies Appropriations Act, The Department of Defense and Full-Year Continuing Appropriations Act appropriated an additional $75 million and $49.9 million, respectively, for FY 2010 and FY 2011. The TIGGER Program has awarded 87 competitively selected projects, implementing a wide variety of technologies to meet program goals. The awarded projects are geographically diverse, covering 35

states and 67 different transit agencies in both urban and rural settings.

The information that's currently being collected for this program is submitted as part of the Project Management reporting requirements for TIGGER. The collection of Project Management information provides documentation that the recipients of TIGGER funds are meeting program objectives and are complying with FTA Circular 5010.1D, ''Grant Management Requirements'' and other federal requirements.

To meet the requirements of the ARRA, FTA originally requested an emergency approval from OMB to collect information for the TIGGER Program. OMB approved FTA's emergency request for approval on March 10, 2009. FTA published a **Federal Register** notice for Announcement of Project Selections for each NOFA in consecutive FY, 2009, 2010, and 2011, identifying program recipients.

Respondents: State and local government agencies.

Estimated Annual Burden on Respondents: 196 hours for each of the respondents.

Estimated Total Annual Burden: 17,052 hours.

Frequency: Annual.

Issued: May 14, 2013.

Matthew M. Crouch,

Deputy Associate Administrator for Administration.

[FR Doc. 2013–11791 Filed 5–16–13; 8:45 am]

BILLING CODE 4910–57–P

DEPARTMENT OF THE TREASURY

Internal Revenue Service

Proposed Collection; Comment Request for Form 926

AGENCY: Internal Revenue Service (IRS), Treasury.

ACTION: Notice and request for comments.

SUMMARY: The Department of the Treasury, as part of its continuing effort to reduce paperwork and respondent burden, invites the general public and other Federal agencies to take this opportunity to comment on proposed and/or continuing information collections, as required by the Paperwork Reduction Act of 1995, Public Law 104–13(44 U.S.C. 3506(c)(2)(A)). Currently the IRS is soliciting comments concerning Form 926, Return by a U.S. Transferor of Property to a Foreign Corporation, Foreign Estate or Trust, or Foreign Partnership.

DATES: Written comments should be received on or before July 16, 2013 to be assured of consideration.

ADDRESSES: Direct all written comments to R. Joseph Durbala, Internal Revenue Service, Room 6129, 1111 Constitution Avenue NW., Washington, DC 20224.

FOR FURTHER INFORMATION CONTACT: Requests for additional information or copies of the form and instructions should be directed to Katherine Dean, at (202) 622–3186, or at Internal Revenue Service, Room 6242, 1111 Constitution Avenue NW., Washington, DC 20224, or through the internet, at *Katherine.b.dean@irs.gov.*

SUPPLEMENTARY INFORMATION:

Title: Return by a U.S. Transferor of Property to a Foreign Corporation.

OMB Number: 1545–0026.

Form Number: Form 926.

Abstract: Form 926 is filed by any U.S. person who transfers certain tangible or intangible property to a foreign corporation to report information required by section 6038B.

Current Actions: One line item (requesting a Reference ID number of the transferee foreign corporation) and one code reference are being added to his collection.

Type of Review: Revision of a currently approved collection

Affected Public: Business or other for-profit organizations and Individuals or households.

Estimated Number of Respondents: 667.

Estimated Time per Respondent: 45 hours, 15 minutes.

Estimated Total Annual Burden Hours: 30,196.

The following paragraph applies to all of the collections of information covered by this notice:

An agency may not conduct or sponsor, and a person is not required to respond to, a collection of information unless the collection of information displays a valid OMB control number. Books or records relating to a collection of information must be retained as long as their contents may become material in the administration of any internal revenue law. Generally, tax returns and tax return information are confidential, as required by 26 U.S.C. 6103.

Request for Comments: Comments submitted in response to this notice will be summarized and/or included in the request for OMB approval. All comments will become a matter of public record. Comments are invited on: (a) Whether the collection of information is necessary for the proper performance of the functions of the agency, including whether the information shall have practical utility; (b) the accuracy of the agency's estimate of the burden of the collection of information; (c) ways to enhance the quality, utility, and clarity of the information to be collected; (d) ways to minimize the burden of the collection of information on respondents, including through the use of automated collection techniques or other forms of information technology; and (e) estimates of capital or start-up costs and costs of operation, maintenance, and purchase of services to provide information.

Approved: May 1, 2013.

R. Joseph Durbala,

IRS Reports Clearance Officer.

[FR Doc. 2013–11743 Filed 5–16–13; 8:45 am]

BILLING CODE 4830–01–P

DEPARTMENT OF THE TREASURY

Internal Revenue Service

Proposed Collection; Comment Request for Form 4952

AGENCY: Internal Revenue Service (IRS), Treasury.

ACTION: Notice and request for comments.

SUMMARY: The Department of the Treasury, as part of its continuing effort to reduce paperwork and respondent burden, invites the general public and other Federal agencies to take this opportunity to comment on proposed and/or continuing information collections, as required by the Paperwork Reduction Act of 1995, Public Law 104–13 (44 U.S.C. 3506(c)(2)(A)). Currently, the IRS is soliciting comments concerning Form 4952, Investment Interest Expense Deduction.

DATES: Written comments should be received on or before July 16, 2013 to be assured of consideration.

ADDRESSES: Direct all written comments to R. Joseph Durbala, Internal Revenue Service, Room 6129, 1111 Constitution Avenue NW., Washington, DC 20224.

FOR FURTHER INFORMATION CONTACT: Requests for additional information or copies of the form and instructions should be directed to Katherine Dean, at Internal Revenue Service, Room 6242, 1111 Constitution Avenue NW., Washington, DC 20224, or at (202) 622–3186, or through the Internet at *Katherine.b.dean@irs.gov*.

Title: Investment Interest Expense Deduction.

OMB Number: 1545–0191.

Form Number: Form 4952.

Abstract: Interest expense paid by an individual, estate, or trust on a loan

allocable to property held for investment may not be fully deductible in the current year. Form 4952 is used to compute the amount of investment interest expense deductible for the current year and the amount, if any, to carry forward to future years.

Current Actions: There are no changes being made to the form at this time.

Type of Review: Extension of a currently approved collection.

Affected Public: Individuals or households and business or other for-profit organizations.

Estimated Number of Respondents: 137,064.

Estimated Time per Respondent: 1 hour, 30 minutes.

Estimated Total Annual Burden Hours: 205,596.

The following paragraph applies to all of the collections of information covered by this notice:

An agency may not conduct or sponsor, and a person is not required to respond to, a collection of information unless the collection of information displays a valid OMB control number. Books or records relating to a collection of information must be retained as long as their contents may become material in the administration of any internal revenue law. Generally, tax returns and tax return information are confidential, as required by 26 U.S.C. 6103.

Request for Comments: Comments submitted in response to this notice will be summarized and/or included in the request for OMB approval. All comments will become a matter of public record. Comments are invited on: (a) Whether the collection of information is necessary for the proper performance of the functions of the agency, including whether the information shall have practical utility; (b) the accuracy of the agency's estimate of the burden of the collection of information; (c) ways to enhance the quality, utility, and clarity of the information to be collected; (d) ways to minimize the burden of the collection of information on respondents, including through the use of automated collection techniques or other forms of information technology; and (e) estimates of capital or start-up costs and costs of operation, maintenance, and purchase of services to provide information.

Approved: May 1, 2013.

R. Joseph Durbala,

IRS Reports Clearance Officer.

[FR Doc. 2013–11744 Filed 5–16–13; 8:45 am]

BILLING CODE 4830–01–P

DEPARTMENT OF THE TREASURY

Internal Revenue Service

Proposed Collection; Comment Request for Regulation Project

AGENCY: Internal Revenue Service (IRS), Treasury.

ACTION: Notice and request for comments.

SUMMARY: The Department of the Treasury, as part of its continuing effort to reduce paperwork and respondent burden, invites the general public and other Federal agencies to take this opportunity to comment on proposed and/or continuing information collections, as required by the Paperwork Reduction Act of 1995, Public Law 104–13 (44 U.S.C. 3506(c)(2)(A)). Currently, the IRS is soliciting comments concerning certain elections under the Tax Reform Act of 1986.

DATES: Written comments should be received on or before July 16, 2013 to be assured of consideration.

ADDRESSES: Direct all written comments to R. Joseph Durbala, Internal Revenue Service, Room 6129, 1111 Constitution Avenue NW., Washington, DC 20224.

FOR FURTHER INFORMATION CONTACT: Requests for additional information or copies of the regulation should be directed to Katherine Dean, (202) 622–3186, or at Internal Revenue Service, Room 6242, 1111 Constitution Avenue NW., Washington DC 20224, or through the internet, at *Katherine.b.dean@irs.gov*.

SUPPLEMENTARY INFORMATION:

Title: Certain Elections Under the Tax Reform Act of 1986.

OMB Number: 1545–0982.

Regulation Project Numbers: T.D. 8124.

Abstract: Section 5h.5(a) of this regulation sets forth general rules for the time and manner of making various elections under the Tax Reform Act of 1986. The regulation enables taxpayers to take advantage of various benefits provided by the Internal Revenue Code.

Current Actions: There are no changes in burden relating to this collection of information.

Type of review: Extension of OMB approval.

Affected Public: Individuals or households, Business or other for-profit organizations, Not-for-profit institutions, Farms, and State, Local, or Tribal Governments.

Estimated Number of Respondents: 114,710.

Estimated Time per Respondent: 15 minutes.

Estimated Total Annual Burden Hours: 28,678.

The following paragraph applies to all of the collections of information covered by this notice:

An agency may not conduct or sponsor, and a person is not required to respond to, a collection of information unless the collection of information displays a valid OMB control number. Books or records relating to a collection of information must be retained as long as their contents may become material in the administration of any internal revenue law. Generally, tax returns and tax return information are confidential, as required by 26 U.S.C. 6103.

Request for Comments: Comments submitted in response to this notice will be summarized and/or included in the request for OMB approval. All comments will become a matter of public record. Comments are invited on: (a) Whether the collection of information is necessary for the proper performance of the functions of the agency, including whether the information shall have practical utility; (b) the accuracy of the agency's estimate of the burden of the collection of information; (c) ways to enhance the quality, utility, and clarity of the information to be collected; (d) ways to minimize the burden of the collection of information on respondents, including through the use of automated collection techniques or other forms of information technology; and (e) estimates of capital or start-up costs and costs of operation, maintenance, and purchase of services to provide information.

Approved: May 1, 2013.

R. Joseph Durbala,

IRS Reports Clearance Officer.

[FR Doc. 2013–11745 Filed 5–16–13; 8:45 am]

BILLING CODE 4830–01–P

DEPARTMENT OF THE TREASURY

Internal Revenue Service

Proposed Collection; Comment Request for Regulation Project

AGENCY: Internal Revenue Service (IRS), Treasury.

ACTION: Notice and request for comments.

SUMMARY: The Department of the Treasury, as part of its continuing effort to reduce paperwork and respondent burden, invites the general public and other Federal agencies to take this opportunity to comment on proposed and/or continuing information collections, as required by the Paperwork Reduction Act of 1995,

Public Law 104–13 (44 U.S.C. 3506(c)(2)(A)). Currently, the IRS is soliciting comments concerning the requirements relating to the maintenance and retention of such records that are sufficient to show whether or not a person is liable for tax.

DATES: Written comments should be received on or before July 16, 2013 to be assured of consideration.

ADDRESSES: Direct all written comments to R. Joseph Durbala, Internal Revenue Service, Room 6129, 1111 Constitution Avenue NW., Washington, DC 20224.

FOR FURTHER INFORMATION CONTACT: Requests for additional information or copies of the regulation section should be directed to Katherine Dean at Internal Revenue Service, Room 6242, 1111 Constitution Avenue NW., Washington, DC 20224, or at (202) 622–3186, or through the internet at *Katherine.b.dean@irs.gov*.

SUPPLEMENTARY INFORMATION:

Title: Records.

OMB Number: 1545–1156.

Regulation Project Number: Regulation section 1.6001–1.

Abstract: Internal Revenue Code section 6001 requires, in part, that every person liable for tax, or for the collection of that tax, keep such records and comply with such rules and regulations as the Secretary (of the Treasury) may from time to time prescribe. It also allows the Secretary, in his or her judgment, to require any person to keep such records that are sufficient to show whether or not that person is liable for tax. Under regulation section 1.6001–1, in general, any person subject to tax, or any person required to file an information return, must keep permanent books of account or records, including inventories, that are sufficient to establish the amount of gross income, deductions, credits or other matters required to be shown by such person in any tax return or information return. Books and records are to be kept available for inspection by authorized internal revenue officers or employees and are to be retained so long as their contents any became material in the administration of any internal revenue law.

Current Actions: There is no change to these existing regulations.

Type of Review: Extension of a currently approved collection.

Affected Public: Individuals or households, and Business or other for-profit organizations, Not-for-profit institutions, Farms, and Federal, State, Local or Tribal Governments.

The recordkeeping burden in this regulation is already reflected in the burden of all tax forms.

The following paragraph applies to all of the collections of information covered by this notice:

An agency may not conduct or sponsor, and a person is not required to respond to, a collection of information unless the collection of information displays a valid OMB control number. Books or records relating to a collection of information must be retained as long as their contents may become material in the administration of any internal revenue law. Generally, tax returns and tax return information are confidential, as required by 26 U.S.C. 6103.

Request for Comments: Comments submitted in response to this notice will be summarized and/or included in the request for OMB approval. All comments will become a matter of public record. Comments are invited on: (a) Whether the collection of information is necessary for the proper performance of the functions of the agency, including whether the information shall have practical utility; (b) the accuracy of the agency's estimate of the burden of the collection of information; (c) ways to enhance the quality, utility, and clarity of the information to be collected; (d) ways to minimize the burden of the collection of information on respondents, including through the use of automated collection techniques or other forms of information technology; and (e) estimates of capital or start-up costs and costs of operation, maintenance, and purchase of services to provide information.

Approved: May 1, 2013.

R. Joseph Durbala,

IRS Reports Clearance Officer.

[FR Doc. 2013–11746 Filed 5–16–13; 8:45 am]

BILLING CODE 4830–01–P

DEPARTMENT OF THE TREASURY

Internal Revenue Service

Open Meeting of the Taxpayer Advocacy Panel Toll-Free Phone Line Project Committee

AGENCY: Internal Revenue Service (IRS), Treasury.

ACTION: Notice of meeting.

SUMMARY: An open meeting of the Taxpayer Advocacy Panel Toll-Free Phone Line Project Committee will be conducted. The Taxpayer Advocacy Panel is soliciting public comments, ideas and suggestions on improving customer service at the Internal Revenue Service.

DATES: The meeting will be held Tuesday, June 18, 2013.

FOR FURTHER INFORMATION CONTACT: Audrey Y. Jenkins at 1–888–912–1227 or 718–834–2201.

SUPPLEMENTARY INFORMATION: Notice is hereby given pursuant to Section 10(a)(2) of the Federal Advisory Committee Act, 5 U.S.C. App. (1988) that an open meeting of the Taxpayer Advocacy Panel Toll-Free Phone Line Project Committee will be held Tuesday, June 18, 2013 at 11:00 a.m. Eastern Time via teleconference. The public is invited to make oral comments or submit written statements for consideration. Due to limited conference lines, notification of intent to participate must be made with Audrey Y. Jenkins. For more information please contact: Ms. Jenkins at 1–888–912–1227 or 718–834–2201, or write TAP Office, 100 Myrtle Avenue, 2 Metro Tech Center 7th Floor, Brooklyn, NY 11201 or contact us at the Web site: *http://www.improveirs.org*.

The committee will be discussing Toll-free issues and public input is welcomed.

Dated: May 10, 2013.

Otis Simpson,

Acting Director, Taxpayer Advocacy Panel.

[FR Doc. 2013–11614 Filed 5–16–13; 8:45 am]

BILLING CODE 4830–01–P

FEDERAL REGISTER

Vol. 78 Friday,

No. 96 May 17, 2013

Part II

Department of Energy

Federal Energy Regulatory Commission
18 CFR Part 40
Revisions to Electric Reliability Organization Definition of Bulk Electric System and Rules of Procedure; Final Rule

DEPARTMENT OF ENERGY

Federal Energy Regulatory Commission

18 CFR Part 40

[Docket Nos. RM12–6–001 and RM12–7–001; Order No. 773–A]

Revisions to Electric Reliability Organization Definition of Bulk Electric System and Rules of Procedure

AGENCY: Federal Energy Regulatory Commission, DOE.

ACTION: Final rule; order on rehearing and clarification.

SUMMARY: The Commission denies rehearing in part, grants rehearing in part and otherwise reaffirms its determinations in Order No. 773. In addition, the Commission clarifies certain provisions of the Final Rule. Order No. 773 approved the modifications to the currently-effective definition of ''bulk electric system'' developed by the North American Electric Reliability Corporation (NERC), the Commission-certified Electric Reliability Organization. Order No. 773 also approved NERC's revisions to its Rules of Procedure, which create an exception process to add elements to, or remove elements from, the bulk electric system on a case-by-case basis and established a process pursuant to which an entity can seek a determination by the Commission whether facilities are ''used in local distribution'' as set forth in the Federal Power Act.

DATES: *Effective Date:* This rule will become effective May 17, 2013.

FOR FURTHER INFORMATION CONTACT:
Susan Morris (Technical Information), Office of Electric Reliability, Division of Reliability Standards and Security, Federal Energy Regulatory Commission, 888 First Street NE., Washington, DC 20426, Telephone: (202) 502–6803.

Nicholas Snyder (Technical Information), Office of Energy Market Regulation, Division of Electric Power Regulation-Central, Federal Energy Regulatory Commission, 888 First Street NE., Washington, DC 20426, Telephone: (202) 502–6408.

Robert Stroh (Legal Information), Office of the General Counsel, Federal Energy Regulatory Commission, 888 First Street NE., Washington, DC 20426, Telephone: (202) 502–8473.

SUPPLEMENTARY INFORMATION:

Before Commissioners: Jon Wellinghoff, Chairman; Philip D. Moeller, John R. Norris, Cheryl A. LaFleur, and Tony Clark.

Order on Rehearing and Clarification (Issued April 18, 2013)

I. Introduction

1. On December 20, 2012, the Commission issued a Final Rule (Order No. 773) approving modifications to the currently-effective definition of ''bulk electric system'' developed by the North American Electric Reliability Corporation (NERC), the Commission-certified Electric Reliability Organization (ERO).[1] The Commission found that the modified definition of ''bulk electric system'' improves upon the currently-effective definition by establishing a bright-line threshold that includes all facilities operated at or above 100 kV and removing language that allows for broad regional discretion. The Commission also found that the revised definition provides improved clarity by identifying specific categories of facilities and configurations as inclusions and exclusions. The Commission also found that NERC's case-by-case exception process to add elements to, and remove elements from, the definition of the bulk electric system adds transparency and uniformity to the determination of what constitutes the bulk electric system. The Final Rule found that, after notice and comment, the Commission can designate sub-100 kV facilities, or other facilities, as part of the bulk electric system. The Commission also established a process pursuant to which an entity can seek a determination by the Commission whether facilities are ''used in local distribution'' as set forth in the Federal Power Act (FPA).

2. In this order, the Commission denies in part and grants in part the requests for rehearing and clarification of the Final Rule, as discussed below.

A. Background

1. Order Nos. 743 and 743–A

3. On November 18, 2010, in Order No. 743, the Commission directed that NERC, through NERC's Reliability Standards Development Process, develop modifications to the currently-effective definition of the term ''bulk electric system'' to ensure that the definition encompasses all facilities necessary for operating the interconnected transmission network.[2] The Commission also directed NERC to address the Commission's technical and policy concerns. Among the Commission's concerns were inconsistencies in the application of the definition and a lack of oversight and exclusion of facilities from the bulk electric system required for the operation of the interconnected transmission network. In Order No. 743, the Commission concluded that the best way to address these concerns was to eliminate the Regional Entity discretion to define the bulk electric system without NERC or Commission review, maintain a bright-line threshold that includes all facilities operated at or above 100 kV except defined radial facilities, and adopt an exemption process and criteria for removing from the bulk electric system definition, those facilities that are not necessary for operating the interconnected transmission network. In Order No. 743, the Commission allowed NERC to ''propose a different solution that is as effective as, or superior to, the Commission's proposed approach in addressing the Commission's technical and other concerns so as to ensure that all necessary facilities are included within the scope of the definition.''[3] The Commission directed NERC to file the revised definition of bulk electric system and its process to exempt facilities from inclusion in the bulk electric system within one year of the effective date of the final rule.[4]

4. In Order No. 743–A, the Commission reaffirmed its determinations in Order No. 743. In addition, the Commission clarified that the issue the Commission directed NERC to rectify was the discretion the Regional Entities have under the current definition to define the bulk electric system in their regions without any oversight from the Commission or NERC.[5] The Commission also clarified that the 100 kV threshold was a ''first step or proxy'' for determining which facilities should be included in the bulk electric system.[6]

5. The Commission further clarified that the statement in Order No. 743, ''determining where the line between 'transmission' and 'local distribution' lies … should be part of the exemption process the ERO develops,'' was intended to grant discretion to NERC, as the entity with technical expertise, to develop criteria to determine how to differentiate between local distribution and transmission facilities in an objective, consistent, and transparent

[1] *Revisions to Electric Reliability Organization Definition of Bulk Electric System and Rules of Procedure,* Order No. 773, 141 FERC ¶ 61,236 (2012).

[2] *Revision to Electric Reliability Organization Definition of Bulk Electric System,* Order No. 743, 133 FERC ¶ 61,150, at P 16 (2010), *order on reh'g,* Order No. 743–A, 134 FERC ¶ 61,210 (2011).

[3] Order No. 743, 133 FERC ¶ 61,150 at P 16.

[4] *Id.* P 113.

[5] Order No. 743–A, 134 FERC ¶ 61,210 at P 11.

[6] *Id.* PP 40, 67, 102–103.

manner.[7] The Commission stated that the ''Seven Factor Test'' adopted in Order No. 888 could be relevant and possibly a logical starting point for determining which facilities are local distribution for reliability purposes.[8] However, the Commission left it to NERC to determine if and how the Seven Factor Test should be considered in differentiating between local distribution and transmission facilities for purposes of determining whether a facility should be classified as part of the bulk electric system.[9] Order No. 743–A re-emphasized that local distribution facilities are excluded from the definition of Bulk-Power System and, therefore, must be excluded from the definition of bulk electric system.[10] In Order No. 743–A, the Commission also stated that, ''although local distribution facilities are excluded from the definition, it still is necessary to determine which facilities are local distribution, and which are transmission. Whether facilities are used in local distribution will in certain instances raise a question of fact, which the Commission has jurisdiction to determine.'' [11]

2. Order No. 773

6. On January 25, 2012, NERC submitted two petitions pursuant to the directives in Order No. 743: (1) NERC's proposed revision to the definition of ''bulk electric system'' which includes provisions to include and exclude facilities from the ''core'' definition (Docket No. RM12–6–000); and (2) revisions to NERC's Rules of Procedure to add a procedure (an exception process) to classify or de-classify an element as part of the ''bulk electric system'' (Docket No. RM12–7–000).[12]

7. On December 20, 2012, the Commission issued Order No. 773, a final rule approving NERC's modifications to the definition of ''bulk electric system'' and the exception process, in response to Order Nos. 743 and 743–A. The Commission found that the revised definition of ''bulk electric system'' establishes a bright-line threshold that includes all facilities operated at or above 100 kV and removed language from the prior definition that allows for broad regional discretion. Further, the Commission found that inclusions and exclusions in the definition that address typical system facilities and configurations such as generation and radial systems provide additional granularity that improves consistency and provides a practical means to determine the status of common system configurations.[13]

8. In the Final Rule, the Commission found that the modified definition is consistent, repeatable and verifiable and will provide clarity that will assist NERC and affected entities in implementing Reliability Standards. The Commission also found that NERC's proposal satisfies the directives of Order No. 743 to develop modifications to the currently-effective definition of bulk electric system to ensure that the definition encompasses all facilities necessary for operating an interconnected transmission network.

9. The Commission also approved NERC's case-by-case exception process to add elements to, and remove elements from, the definition of the bulk electric system.[14] In addition, the Final Rule established a process by which an entity can seek a determination by the Commission whether facilities are ''used in local distribution'' as set forth in the FPA on a case-by-case basis.[15] The Commission also directed NERC to (1) implement the exclusions for radial systems (exclusion E1) and local networks (exclusion E3) so that they do not apply to tie-lines, i.e. generator interconnection facilities, for bulk electric system generators; and (2) modify the local network exclusion to remove the 100 kV minimum operating voltage to allow systems that include one or more looped configurations connected below 100 kV to be eligible for the local network exclusion.[16]

B. Requests for Rehearing

10. The following entities filed timely requests for rehearing and/or clarification of Order No. 773: NERC, American Public Power Association (APPA); American Wind Energy Association (AWEA); City of Holland, Michigan Board of Public Works (Holland); Dow Chemical Company (Dow); Electricity Consumers Resource Council (ELCON); National Association of Regulatory Utility Commissioners (NARUC); National Rural Electric Cooperative Association (NRECA); New York State Public Service Commission (NYPSC); Public Utility District No. 1 of Snohomish County, Washington (Snohomish); Transmission Access Policy Study Group (TAPS); and Utility Services, Inc. (Utility Services).[17]

11. Exelon Corporation filed a response to the NERC request for clarification. The ITC Companies filed a motion for leave to answer and answer to the Holland rehearing request, and NERC filed a motion for leave to answer and answer in response to Exelon's response. Holland filed an answer to the answer of the ITC Companies, and Exelon filed a response to NERC's answer.

II. Discussion

A. Procedural Matters

12. Rule 213(a)(2) of the Commission's Rules of Practice and Procedure, 18 CFR 213(a)(2) (2012), provides that answers are generally not permitted unless requested by the decisional authority. Rule 713(d) of the Commission's Rules of Practice and Procedure, 18 CFR 713(d) (2012), prohibits answers to requests for rehearing. Accordingly, we will reject the answers filed by the parties in this proceeding.

B. Challenges to Commission Approval of the Revised Bulk Electric System Definition and Use of a 100 kV Bright-Line Threshold

13. NYPSC argues that the Commission's approval of the 100 kV bright-line threshold was arbitrary, capricious and unsupported by

[7] *Id.* P 68.

[8] Order No. 743–A, 134 FERC ¶ 61,210 at P 69. *See Promoting Wholesale Competition Through Open Access Non-Discriminatory Transmission Services by Public Utilities; Recovery of Stranded Costs by Public Utilities and Transmitting Utilities,* Order No. 888, FERC Stats. & Regs. ¶ 31,036, at 31,783–84 (1996), *order on reh'g,* Order No. 888–A, FERC Stats. & Regs. ¶ 31,048, *order on reh'g,* Order No. 888–B, 81 FERC ¶ 61,248 (1997), *order on reh'g,* Order No. 888–C, 82 FERC ¶ 61,046 (1998), *aff'd in relevant part sub nom. Transmission Access Policy Study Group* v. *FERC,* 225 F.3d 667 (DC Cir. 2000), *aff'd sub nom. New York* v. *FERC,* 535 U.S. 1 (2002).

[9] Order No. 743–A, 134 FERC ¶ 61,210 at P 70.

[10] *Id.* PP 25, 58.

[11] *Id.* P 67.

[12] The Commission-approved core definition, inclusions and exclusions are included in Attachment A to this order on rehearing.

[13] Order No. 773, 141 FERC ¶ 61,236 at PP 2, 4, 38–40, 51.

[14] Order No. 773, 141 FERC ¶ 61,236 at PP 251–262.

[15] Order No. 773, 141 FERC ¶ 61,236 at PP 66–73.

[16] Order No. 773, 141 FERC ¶ 61,236 at PP 155, 164–169.

[17] We find that Utility Services' rehearing request is deficient because it fails to include a Statement of Issues section separate from its arguments, as required by Rule 713 of the Commission's Rules of Practice and Procedure. 18 CFR 385.713(c)(2) (2012). Rule 713(c)(2) requires that a rehearing request include a separate section entitled ''Statement of Issues'' listing each issue presented to the Commission in a separately enumerated paragraph that includes representative Commission and court precedent on which the participant is relying. Under Rule 713, any issue not so listed will be deemed waived. *See Revision of Rules of Practice and Procedure Regarding Issue Identification,* Order No. 663, FERC Stats. & Regs. ¶ 31,193 (2005), *order on reh'g,* Order No. 663–A, FERC Stats. & Regs. ¶ 31,211 (2006). Accordingly, we dismiss Utility Services' rehearing request. However, we note that Utility Services' rehearing request raises issues similar to those addressed in other petitions in this proceeding.

substantial evidence because the record lacks a technical justification for using the 100 kV threshold. NYPSC adds that the Commission failed to demonstrate a sufficient technical justification that the bright-line definition only encompasses facilities needed for the reliable operation of the Bulk-Power System. While NYPSC believes that the Commission's bright-line approach is designed to ensure consistency, NYPSC states the Commission cannot evade the jurisdictional limitations of the FPA to ensure consistency. NYPSC also argues that the Final Rule contains no factual basis for establishing 100 kV as the appropriate place to draw the line and contends that the Commission conceded that not all facilities operated at or above 100 kV are necessary for operating the interconnected transmission network.

14. NARUC and NYPSC also argue that the definition encompasses facilities that are used for local distribution and are not necessary for operating an interconnected transmission network. NYPSC contends that, through studies and functional testing, the New York Independent System Operator, Inc. (NYISO) has developed a list of facilities that have the potential to cause cascading problems on the system as well as facilities that can have an impact on the Bulk-Power System but whose main function is to serve load. NYPSC claims that the Commission ignored this information in establishing a bright-line definition.

15. NARUC argues that a 100 kV bright-line threshold sweeps into the bulk electric system elements that were previously classified as local distribution. According to NARUC, the Final Rule creates the possibility of entities having to engage in a costly analysis to seek an exception for facilities used in local distribution. NARUC states that neither the inclusions and exclusions in the definition, nor the exception process cure the jurisdictional overreach inherent in the bright-line rule set at 100 kV.

16. Further, NYPSC argues that, even though the definition does not include facilities used for local distribution, the Commission ''effectively acknowledged that such facilities would be placed under its jurisdiction by establishing an exception process whereby entities may seek to demonstrate that the facilities are not necessary for operating the interconnected transmission network, or are used in local distribution.''[18] NYPSC argues that the Commission should not assume it has jurisdiction over facilities operated at 100 kV and above until an entity demonstrates that the Commission does not have jurisdiction. According to NARUC and NYPSC, the approach adopted in the Final Rule inappropriately shifts the legal and technical burdens on the jurisdictional issue to the entity applying for an exception.[19] NYPSC adds that the Commission improperly dismissed NYPSC's evidence that there is a layer of ''area'' transmission facilities below the Bulk-Power System and above distribution facilities that move energy within a utility service territory and toward load centers and only a small subset of these ''area'' facilities assists in maintaining the reliability of the Bulk-Power System.

17. NYPSC contends that the bright-line definition is inconsistent with the FPA's definition of the Bulk-Power System, which, according to NYPSC, recognizes that a functional test is needed to determine whether a facility is necessary for reliable operation. NYPSC claims that the Commission ignored a functional test for defining the Bulk-Power System, such as the one the Northeast Power Coordinating Council, Inc. (NPCC) has historically used to identify facilities having an adverse impact on the Bulk-Power System. NYPSC also argues that the Commission should not require utilities to upgrade facilities to comply with Commission-approved Reliability Standards where a timely request for an exception has been submitted and is still pending. NYPSC contends that compliance and the expenditure of ratepayer funds should not be required until after the Commission has made a final determination on the exception, which will ensure that the costs of compliance are not unnecessarily imposed upon ratepayers, and the Commission does not impermissibly exert jurisdiction.

Commission Determination

18. We deny rehearing and affirm the findings in the Final Rule. As described below, petitioners have previously raised, and the Commission has addressed and rejected, the arguments with respect to the Commission's authority and technical justification for the 100 kV bright-line threshold and the functional test.

19. In Order No. 743, the Commission found sufficient justification for the finding that the current definition allows broad regional discretion without ERO or Commission oversight, which has resulted in reliability issues and has failed to ensure that all facilities necessary for operation of the interconnected transmission network are covered by the Reliability Standards.[20] The Commission found that

> many facilities operated at 100 kV and above have a significant effect on the overall functioning of the grid. The majority of 100 kV and above facilities in the United States operate in parallel with other high voltage and extra high voltage facilities, interconnect significant amounts of generation sources and operate as part of a defined flow gate, which illustrates their parallel nature and therefore their necessity to the reliable operation of the interconnected transmission system.[21]

The Commission also explained its concern with the application of the currently-effective definition by illustrating examples of wide-scale cascading outages that NERC or the Commission did not have a chance to mitigate because the facilities were not considered part of the bulk electric system.[22] As discussed in Order No. 743, the Commission found that failure of 100–200 kV facilities has caused cascading outages that would have been minimized or prevented if these facilities were operated in compliance with the NERC Reliability Standards.[23]

20. The Commission also noted that NERC already applies a general 100 kV threshold, and all regions, with the exception of NPCC, also apply a 100 kV threshold.[24] The Commission stated that the best way to address its concerns ''is to eliminate the regional discretion in the ERO's current definition, maintain the bright-line threshold that includes all facilities operated at or above 100 kV except defined radial facilities, and establish an exemption process and criteria for excluding facilities the ERO determines are not necessary for operating the interconnected transmission network.''[25] The Commission did not propose to change the existing threshold in the definition, but rather charged NERC with eliminating ''the ambiguity created by the current characterization of that threshold as a general guideline.''[26] In other words, while the Commission did

[18] NYPSC Request for Rehearing and Clarification at 11 (citing Order No. 773, 141 FERC ¶ 61,236 at P 40). *See also* NARUC Request for Rehearing at 3–4.

[19] *See, e.g.,* NYPSC Request for Rehearing and Clarification at 11–12.

[20] Order No. 743, 133 FERC ¶ 61,150 at P 72.

[21] Order No. 773, 141 FERC ¶ 61,236 at P 41 (citing Order No. 743, 133 FERC ¶ 61,150 at P 73).

[22] Order No. 743, 133 FERC ¶ 61,150 at PP 72–96.

[23] Order No. 743, 133 FERC ¶ 61,150 at P 87.

[24] Order No. 743, 133 FERC ¶ 61,150 at P 56; Order No. 773, 141 FERC ¶ 61,236 at P 42.

[25] Order No. 743, 133 FERC ¶ 61,150 at P 30.

[26] *Id.* (footnotes omitted).

not mandate the 100 kV threshold, it directed NERC to develop a revised definition that addresses the inconsistency, lack of oversight and exclusion of facilities inherent in the current definition.[27]

21. We disagree with NYPSC and NARUC that by establishing an exception process the Commission effectively acknowledged that local distribution facilities would be placed under its jurisdiction. As we explained in the Final Rule, the bright-line threshold would be a ''first step or proxy'' in determining which facilities should be included in the bulk electric system. The Commission also explained that the ''definition, coupled with the exception process will ensure that facilities not necessary for the operation of the interconnected transmission network will be properly categorized.'' [28] Thus, the exception process is not evidence that the ''core'' definition violates the FPA but instead is a means to ensure the application of the definition complies with the FPA.

22. Further, as we explained in the Final Rule, the determination of whether an element or facility is ''used in local distribution,'' is a multi-step process that may require a jurisdictional analysis that is more appropriately performed by the Commission.[29] The Commission stated:

> application of the ''core'' definition and the four exclusions should serve to exclude most facilities used in local distribution from the bulk electric system. However, there may be certain circumstances that present a factual question as to whether a facility that remains in the bulk electric system after applying the ''core'' definition and the four exclusions should nonetheless be excluded because it is used in local distribution. In such circumstances, which we expect will be infrequent, an entity must petition the Commission seeking a determination that the facility is used in local distribution. Such petitions should include information that will assist the Commission in making such determination, and notice of the petition must be provided to NERC and relevant Regional Entities.[30]

In other words, if a facility is classified as part of the bulk electric system by application of the definition but should be excluded because it is a facility used in local distribution, an entity may apply to the Commission for a local distribution determination. Thus, because application of the 100 kV threshold is the first step in the process of determining whether an element is part of the bulk electric system, we reject the argument that the definition will sweep in all elements above 100 kV in a manner inconsistent with the Commission's jurisdiction.[31]

23. In sum, we deny rehearing and affirm that approval of the 100 kV bright-line threshold was adequately supported with a technical justification. Petitioners raise arguments that the Commission has previously considered and rejected in this proceeding as well as previous Commission decisions with respect to the reasons for requiring revisions to the definition of bulk electric system. In all these cases, the Commission explained and justified the appropriateness of a 100 kV threshold. Therefore, we reject the requests for rehearing on these issues.

24. We also reject the argument that a functional test is a more appropriate manner to determine which facilities are part of the bulk electric system. In Order No. 743, the Commission concluded that a material impact or functional test excludes facilities ''without regard to whether they are necessary to operate the system, and instead seek to determine the impact of the loss of an element.'' [32] The Commission also concluded that these tests are subjective and result in an inconsistent process that excludes facilities from the bulk electric system.[33] In the NOPR comments in this proceeding, these same issues were raised, and in the Final Rule the Commission again rejected them.[34] Further, as discussed in detail in the Final Rule, the Commission found that NERC's proposal adequately ensures that all facilities necessary for operating an interconnected electric energy transmission network are included under the bulk electric system. In the Final Rule, the Commission also relied on its finding in Order No. 743 that

> ''[U]niform Reliability Standards, and uniform implementation, should be the goal and the practice, the rule rather than the exception, absent a showing that a regional variation is superior or necessary due to regional differences. Consistency is important as it sets a common bar for transmission planning, operation, and maintenance necessary to achieve reliable operation. . . . [W]e have found several reliability issues with allowing Regional Entities broad discretion without ERO or Commission oversight.''[35]

25. We also disagree with NYPSC's claim that the Commission ignored the NYPSC evidence of NYISO studies and functional testing. As NYPSC states, the NYISO data is the result of a functional test.[36] While the Commission did not reject all material impact tests, the Commission took issue with particular tests and outlined general problems with the material impact tests used to date because they exclude facilities without regard to whether they are necessary to operate the interconnected transmission network. In addition, as explained above, failure of 100–200 kV facilities has caused cascading outages that would have been minimized or prevented if these facilities were operated in compliance with the NERC Reliability Standards. Further, in the Final Rule the Commission noted that NYPSC cited specific examples of facilities that should be excluded, but found that determinations for treatment for specific facilities were ''more appropriate for the exception process'' and were beyond the scope of this proceeding.[37]

26. With regard to NYPSC's request for clarification about the need to upgrade facilities while an exception request is pending, in Order No. 743–A we agreed with petitioners ''that currently unregistered entities that may be required to seek an exemption for facilities under the revised bulk electric system definition will not be required to register and thereafter comply with Reliability Standards until a final decision is made to deny the application for exemption,'' stating that ''entities should not be required to take costly steps to comply with the Reliability Standards prior to the ERO's initial determination on an exemption request.'' [38] NERC's exception process is consistent with the approach in Order No. 743–A. According to NERC, elements that are newly-included in the bulk electric system due to the revised definition will only become subject to relevant Reliability Standards twenty-four months after the effective date of the revised definition.[39] It is NERC's

[27] *See* Order No. 743–A, 134 FERC ¶ 61,210 at P 53.

[28] *Id.*

[29] Order No. 773, 141 FERC ¶ 61,236 at P 69 (citations omitted).

[30] Order No. 773, 141 FERC ¶ 61,236 at P 72 (citations omitted).

[31] Order No. 773, 141 FERC ¶ 61,236 at P 41.

[32] Order No. 743, 133 FERC ¶ 61,150 at P 76.

[33] Order No. 743, 133 FERC ¶ 61,150, at PP 73–86.

[34] Order No. 773, 141 FERC ¶ 61,236 at P 41.

[35] Order No. 773, 141 FERC ¶ 61,236 at P 39 (*citing* Order No. 743, 133 FERC ¶ 61,150, at P 82 (footnote omitted)). Order No. 743 did not reject all material impact assessments but instead took issue with particular tests and outlined general problems with the material impact tests used to determine the extent of the bulk electric system. Order No. 743, 133 FERC ¶ 61,150 at PP 76–78; Order No. 743–A, 134 FERC ¶ 61,210 at PP 44–47. Indeed, the ERO had flexibility to develop alternative approaches, such as a functional test. However, the ERO, in applying its technical expertise, developed a revised definition that retained a 100 kV threshold.

[36] NYPSC Request for Rehearing at 10.

[37] Order No. 773, 141 FERC ¶ 61,236 at P 43.

[38] *See* Order No. 743–A, 134 FERC ¶ 61,210 at PP 91, 93.

[39] NERC Petition at 34.

expectation that during the twenty-four month transition period entities with newly-included elements will file exception requests and the Regional Entities and NERC will make determinations of the exception requests.[40] This transition period is sufficient to obtain a NERC ruling and avoid any compliance costs.[41] However, if an element that is already deemed part of the bulk electric system and subject to relevant Reliability Standards today is included by application of the revised definition of bulk electric system, but an entity seeks an exclusion exception of the element, the element will remain subject to the relevant Reliability Standards during the pendency of the exception process. Conversely, if an element is excluded from the bulk electric system by application of the revised definition, but a different entity with a reliability oversight obligation seeks to include the element in the exception process, the element will not be subject to Reliability Standards during the exception process. If NERC determines the element is needed for operation of the interconnected transmission network and thus part of the bulk electric system, the entity can propose an appropriate implementation plan for compliance.[42]

C. Order No. 773 Directives Regarding the Revised Definition

27. A number of entities request clarification and/or rehearing in connection with the Commission directives in the Final Rule. Specifically, they request clarification and/or rehearing of (1) the Commission decision for treatment of looped configurations connected below 100 kV and the corresponding directive to modify the local network exclusion (exclusion E3) to remove the 100 kV minimum operating voltage; and (2) the directive to implement the exclusions for radial systems (exclusion E1) and local networks (exclusion E3) so that they do not apply to tie-lines (generator interconnection facilities) for bulk electric system generators indentified in inclusion I2 (generating resources).[43]

1. Looped Configurations Connected below 100 kV and Removing the 100 kV Minimum in Exclusion E3

Order No. 773

28. In the Final Rule, the Commission held that radial systems with elements operating at 100 kV or higher in a configuration that emanate from two or more points of connection cannot be deemed ''radial'' if the configuration remains contiguous through elements that are operated below 100 kV. The Commission held that such a configuration is a networked configuration and does not qualify for exclusion E1. The Commission included a depiction of this configuration, shown below, in the Final Rule as Figure 3.[44] However, the Commission also found that the facilities below 100 kV may or may not be necessary for the operation of the interconnected transmission network, and this decision can be made case-by-case in the exception process.

Networked Configuration w/69 kV Loop

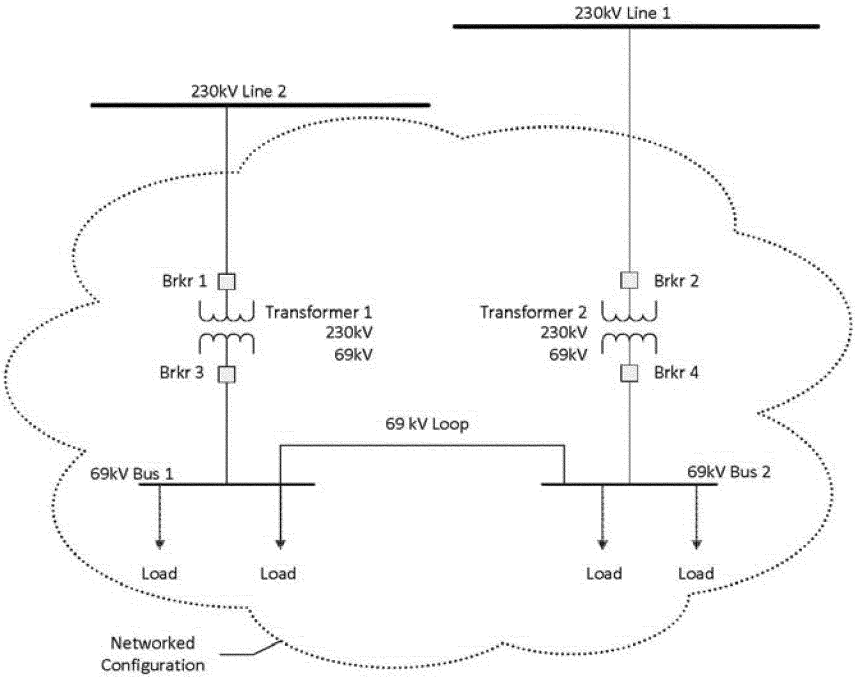

[40] *See* NERC BES Petition at 36.

[41] *See* Order No. 743–A, 134 FERC ¶ 61,210 at P 93. *See also* NERC BES Petition at 36.

[42] NERC ROP Petition, Att. 1 (''Proposed Appendix 5C to the Rules of Procedure, Procedure for Requesting and Receiving an Exception from the NERC Definition of Bulk Electric System, Section 10.1'') at 16: ''In the case of an Element not included in the BES by application of the BES Definition but for which an Inclusion Exception is approved, the Owner shall submit a proposed implementation plan to the Regional Entity detailing the schedule for complying with any Reliability Standards applicable to the newly included Element. The Regional Entity and Owner shall confer to agree upon such schedule.''

[43] The phrase generator tie-line means the same as generator interconnection facility as used in the Notice of Proposed Rulemaking in Docket No. RM12–16–000. *Generator Requirements at the Transmission Interface,* 143 FERC ¶ 61,049 (2013).

[44] *See* Order No. 773, 141 FERC ¶ 61,236 at P 150.

Requests for Rehearing

29. APPA, TAPS and ELCON argue that the Commission erred in holding that two radial lines at or above 100 kV connected by a sub-100 kV line are not eligible for exclusion E1.[45] They argue that the Commission lacks authority to redraft standards, but claim that the Final Rule does so by reinterpreting the exclusion contrary to its language and NERC's interpretation. They claim that finding that exclusion E1 is inapplicable to such a configuration because the configuration is ''networked'' and not a ''radial system'' is unreasonable and constitutes an impermissible change to the NERC-filed definition. APPA, TAPS and ELCON state that, if radial systems connected by a sub-100 kV loop had not been intended to be eligible for exclusion E1, then exclusion E3 would have been drafted to allow such configurations to be covered. They contend that the fact that exclusion E1 is intended to encompass radial lines at or above 100 kV that are connected below 100 kV works in tandem with exclusion E3's limitation to facilities 100 kV and above and reinforces the conclusion that the Final Rule's interpretation of exclusion E1 is inconsistent with the language and structure of the definition. They also argue that the ruling on exclusion E1 and the corresponding directive to modify exclusion E3 improperly substituted the Commission's own judgment for NERC's which, they claim, violates the FPA section 215(d)(2) requirement for the Commission to give due weight to the technical expertise of the ERO.

30. APPA, TAPS and ELCON contend that the Final Rule's identification of additional factors that NERC did not consider provides no support for second guessing the technical content of NERC's definition. APPA states that the exception process exists to consider other factors, such as the factors the Commission indicated that may be relevant in particular cases.[46] According to APPA, TAPS and ELCON, NERC made a determination that loops below 100 kV generally do not impact the grid, but recognized that those that do are more appropriately handled through the exception process. They also argue that the Commission effectively changed the definition without giving NERC the opportunity to find an equally effective or superior solution to the Commission's concern.

31. Further, TAPS and ELCON argue that the Commission should also reverse its directive to NERC to modify exclusion E3 to remove the 100 kV minimum threshold. They contend that the need to change exclusion E3 arises only if exclusion E1 is changed to foreclose exclusion of radials above 100 kV connected at lower voltages, resulting in the need for consideration of such configurations under exclusion E3. According to TAPS and ELCON, exclusion E3, as written, works well with the rest of the definition when exclusion E1 is construed as NERC intended. TAPS and ELCON state that, if the Commission is concerned that NERC's process is not adequately including radial facilities of 100 kV or more connected by sub-100 kV loops, the Commission should not revise exclusions E1 and E3 but should direct NERC to submit a report that provides information on how entities use this exclusion, similar to the Final Rule directive in connection with exclusion E3's 300 kV voltage ceiling.[47]

32. APPA claims that, by not allowing exclusion E1 to apply to sub-100 kV loops between radial systems in conjunction with deletion of the 100 kV floor in exclusion E3, the Commission directive will create a disincentive for distribution providers from connecting their distribution systems to the bulk electric system at multiple points at voltages greater than 100 kV. APPA also stated that distribution providers will be less likely to construct such distribution networks with built-in redundancy that provide multiple paths to provide continuous, high quality service, because of the concern that these distribution systems will be designated as bulk electric system elements.

33. NERC seeks clarification of the Commission directive to revise exclusion E3. Specifically NERC requests clarification that it should remove the phrase ''or above 100 kV but'' in the first sentence of exclusion E3 as shown below.

> E3—Local networks (LN): A group of contiguous transmission Elements operated at ~~or above 100 kV but~~ less than 300 kV that distribute power to Load rather than transfer bulk power across the interconnected system. LN's emanate from multiple points of connection at 100 kV or higher to improve the level of service to retail customer Load and not to accommodate bulk power transfer across the interconnected system. The LN is characterized by all of the following:[48]

NERC contends that the Commission's approach will entail the evaluation of significantly more facilities in applying exclusion E3 and is administratively burdensome, NERC requests that the Commission clarify the basis and intent of this directive to allow NERC to implement this directive appropriately.[49]

Commission Determination

34. The Commission denies rehearing and upholds the Final Rule. The Commission disagrees that it failed to give due weight to NERC. As explained below, the Commission considered NERC's rationale, but after giving due weight found it unpersuasive.

35. In the NOPR, the Commission agreed with NERC's proposal that radial systems only serving load and emanating from a single point of connection of 100 kV or higher should be excluded from the bulk electric system. However, we expressed concern ''that the exclusion could allow elements operating at 100 kV or higher in a configuration that emanates from two or more points of connection ''to be deemed ''radial'' even though the configuration remains contiguous through elements that are operated below 100 kV.''[50] The Commission also requested comment on the appropriateness of examining elements below 100 kV to determine if the configuration (shown in the figure above) meets exclusion E1, i.e., whether the figure depicts ''a system emanating from two points of connection at 230 kV and, therefore, the 230 kV elements above the transformers to the points of connection to the two 230 kV lines would not be eligible for the exclusion E1 notwithstanding the connection below 100 kV.''[51] In response to the NOPR, some commenters disagreed with the Commission's characterization that the configuration depicts a loop, claiming that it represents two separate radial systems, while other commenters agreed with the NOPR that the configuration does not meet the definition of a radial system.[52] The Commission considered NERC's explanations, but in the Final Rule the Commission found that the configuration shown above is a networked configuration through a 69 kV loop and does not qualify for exclusion E1 because the load can be served by either 230 kV line.[53]

36. The Commission disagrees that this decision is contrary to the language of exclusion E1. Instead, our

[45] *See also* Dow Request for Rehearing at 8–10.

[46] *See* Order No. 773, 141 FERC ¶ 61,236 at P 155 n.139.

[47] TAPS and ELCON Request for Rehearing and Clarification at 6 (citing Order No. 773, 141 FERC ¶ 61,236 at P 206).

[48] NERC Request for Clarification at 4.

[49] *Id.*

[50] *Revisions to Electric Relibaility Organization Definition of Bulk Electric System and Rules of Procedure,* Notice of Proposed Rulemaking (NOPR), 139 FERC ¶ 61,247 at P 81.

[51] *Id.*

[52] Order No. 773, 141 FERC ¶ 61,236 at P 154.

[53] Order No. 773, 141 FERC ¶ 61,236 at P 155.

interpretation of NERC's wording reasonably construes the ambiguity, if any, in exclusion E1. Even apart from NERC's wording of exclusion E1, it is difficult to envision any reasonable exclusion for radial lines that would cover the facilities in the configuration above. The looped systems have more than one path to the bulk electric system and, therefore, it is reasonable not to consider them ''radial'' in nature. Exclusion E1 provides a definition of ''radial system'' as ''[a] group of contiguous transmission Elements that emanates *from a single point of connection of 100 kV or higher . . .*'' (emphasis added).[54] This definition of ''radial system'' only allows a single point of connection and does not limit operating voltage of the transmission elements connecting two such points to any minimum value. Therefore, ''radial systems'' as defined in exclusion E1 includes elements that cover the entire range of operating voltages. It strikes us as unreasonable to characterize lines as radial by ignoring connecting facilities below 100 kV. Rather the reasonable approach is to find these lines to be non-radial and then consider whether they should be excluded as a local network or through the exception process. Further, as we noted previously, many facilities operated at 100 kV and above have a significant effect on the overall functioning of the grid. The majority of 100 kV and above facilities in the United States operate in parallel with other high voltage and extra high voltage facilities, interconnect significant amounts of generation sources and operate as part of a defined flow gate, which illustrates their parallel nature and therefore their necessity to the reliable operation of the interconnected transmission system. The Final Rule also noted that NERC emphasized that radial systems cannot have multiple connections at 100 kV or higher.[55] For these reasons, we believe it is important that these configurations be assessed for exclusion from the bulk electric system under the criteria in exclusion E3, to ensure that any excluded facilities do not contribute to the reliable operation of the interconnected system. Moreover, as noted in the Final Rule, the sub-100 kV elements comprising radial systems and local networks will not be included in the bulk electric system, unless determined otherwise in the exception process.[56]

37. We also deny rehearing on TAPS' and ELCON's argument that the Commission's decision regarding exclusion E1 and the Final Rule directive to change the language in exclusion E3 (removing the 100 kV minimum operating threshold language) will no longer allow exclusions E1 and E3 to work together and will be administratively more burdensome. As we stated in the Final Rule, exclusion E3 as written applies to a local network that is contiguous and above 100 kV. Thus, the exclusion E3 language, as NERC initially proposed, did not apply to a configuration where the facilities in question are contiguous below 100 kV.[57] Removing the 100 kV minimum operating voltage in exclusion E3 allows networked configurations below 100 kV, that may not otherwise be eligible for exclusion E1, to be eligible for exclusion E3. This modification also makes the ''local network'' exclusion language consistent with language in exclusion E3 criterion (a), which limits generation on the local network and its underlying elements. As we stated in the Final Rule, the entire range of operating voltage elements must be examined when considering a local network.[58]

38. In the Final Rule, the Commission concluded that removing the 100 kV floor in exclusion E3 will decrease the burden for some entities that would have otherwise been included in the bulk electric system because these entities may now apply exclusion E3. This is because many, if not most, of the configurations in question may still be excluded through application of the modified exclusion E3.

39. We disagree with TAPS's, ELCON's and APPA's contention that the Final Rule's identification of other possible factors to be considered does not support dismissing the technical content of NERC's definition. The Commission did not rely on these other factors as the basis for its decision.[59] Instead, the Commission found that looped systems have more than one path to the bulk electric system. Therefore, the Commission concluded that it is reasonable not to consider them ''radial'' in nature.[60]

40. With respect to NERC's request for clarification, we agree that removing the phrase ''or above 100 kV but'' from the definition of local networks in the first sentence of exclusion E3 is an appropriate way to meet the Commission's directive to remove the 100 kV minimum operating voltage in the local network definition. As we explained in the Final Rule, this modification, together with satisfying the criteria outlined in exclusion E3, will appropriately exclude local network configurations that are not necessary to the reliable operation of the interconnected transmission network.[61]

41. While APPA claims that the Commission directive to not allow exclusion E1 to apply to sub-100 kV loops will create a disincentive for distribution providers to connect their distribution systems to the bulk electric system, our result derives directly from NERC's own wording of exclusion E1. We cannot avoid the reasonable effect of these words based on an unsupported claim that concerns about jurisdiction will cause distribution providers to forgo the significant reliability benefits of an added connection.

42. We do not agree with NERC that ''the Commission's approach will entail the evaluation of significantly more facilities in applying exclusion E3 and is administratively burdensome.'' Exclusion E3 is one part of the bright-line definition of bulk electric system, and all asset owners must apply the definition as a whole in order to determine whether their elements are part of the bulk electric system. As we stated in the Final Rule, exclusion E3 as proposed by NERC requires the local network to be contiguous and above 100 kV. Thus, the exclusion E3 language, as NERC initially proposed, did not allow for the figure above to be eligible for the local network exclusion because it includes contiguous facilities below 100 kV and could have resulted in more exception process decisions.[62] However, as we explained, removing the 100 kV minimum operating voltage in the local network definition allows networked configurations comprised of facilities ranging from below 100 kV to multiple connections at 100 kV and above to be candidates for exclusion E3. In other words, removing the language from exclusion E3 will relieve the burden of

[54] Order No. 773, 141 FERC ¶ 61,236 at P 18.

[55] Order No. 773, 141 FERC ¶ 61,236 at P 42.

[56] Order No. 773, 141 FERC ¶ 61,236 at P 155. In the Final Rule the Commission states that it expects entities to identify and include sub-100 kV facilities necessary for the operation of the interconnected transmission network and found NERC's approach to include such facilities in the bulk electric system to be reasonable. Order No. 773, 141 FERC ¶ 61,236 at P 269. The Commission notes that the joint NERC and Commission staff report on the September 8, 2011, Arizona-Southern California blackout explains why facilities operating below 100 kV should not be ignored simply because the elements are below 100 kV. *See* Arizona-Southern California Outages on September 8, 2011—Causes and Recommendations at 96 (September 2011 Blackout Report), *available at http://www.ferc.gov/legal/staff-reports/04-27-2012-ferc-nerc-report.pdf.* There, facilities below 100 kV were a significant factor in a major blackout, but their significance was not fully or widely recognized until after the blackout.

[57] Order No. 773, 141 FERC ¶ 61,236 at P 155.

[58] *Id.*

[59] *See* Order No. 773, 141 FERC ¶ 61,236 at P 155 n.139.

[60] *Id.*

[61] Order No. 773, 141 FERC ¶ 61,236 at P 155.

[62] Order No. 773, 141 FERC ¶ 61,236 at P 155.

addressing all configurations similar to the looped configuration described above in the exception process by first allowing entities that do not qualify for exclusion E1 to apply exclusion E3. We recognize that certain facilities that might have qualified for exclusion E1 as interpreted by NERC may now seek instead to qualify for exclusion E3 or, if unsuccessful there, may seek relief through the exception process. However, we expect that documenting a valid claim of exclusion E3 will not be particularly burdensome, consisting often of reviewing historic data or relying on information that entities already possess (such as the amount of generation connected to the facilities or whether the facilities contain a Flowgate or transfer path), not necessarily preparing new load flow studies or similar analyses, and retaining such records for possible future review by the Regional Entity. Also, certain entities that will not qualify even for exclusion E3 may seek relief under the exception process. While this possibility exists, we are not persuaded that there will be an inordinate number of such instances, particularly since commenters have not submitted estimates of the number of facilities affected by the entirety of our changes to NERC's proposal.

43. Thus, while we have carefully considered the concerns raised by petitioners, we are not persuaded that the Commission's directives in the Final Rule will result in a significant increase in administrative and compliance burdens. Further, we reiterate that elements that are newly-included in the bulk electric system due to the revised definition will only become subject to relevant Reliability Standards twenty-four months after the effective date of the revised definition.[63] It is NERC's expectation that during the twenty-four month transition period entities will file exception requests and the Regional Entities and NERC will make determinations on the exception requests.[64] We expect that this transition period will be sufficient for those few configurations that may need to seek an exception based on the Commission's determinations regarding exclusions E1 and E3 to obtain a NERC ruling and avoid any compliance costs.[65] However, if an element that is already deemed part of the bulk electric system and subject to relevant Reliability Standards today is included by application of the revised definition of bulk electric system, but an entity seeks an exclusion exception of the element, the element will remain subject to the relevant Reliability Standards during the pendency of the exception process. Conversely, if an element is excluded from the bulk electric system by application of the revised definition, but a different entity with a reliability oversight obligation seeks to include the element in the exception process, the element will not be subject to Reliability Standards during the exception process. If NERC determines the element is needed for operation of the interconnected transmission network and thus part of the bulk electric system, the entity can propose an appropriate implementation plan for compliance.[66]

44. Notwithstanding the foregoing, we agree with petitioners that NERC has the flexibility to develop an equally effective and efficient alternative, provided that NERC addresses our concern to ensure elements at or above 100 kV in a looped configuration are not excluded from the bulk electric system under exclusion E1.[67]

2. Generator Interconnection Facilities Connected to Bulk Electric System Generators

Order No. 773

45. In the Final Rule, the Commission directed NERC to implement exclusion E1 (radial systems) and exclusion E3 (local networks) so that they do not apply to generator interconnection facilities for bulk electric system generators identified in inclusion I2. The Commission stated that, if the generator is necessary for the operation of the interconnected transmission network, it is appropriate to have the generator interconnection facility operating at or above 100 kV that delivers the generation to the bulk electric system included as well. The Commission also stated that it is appropriate to have the bulk electric system contiguous, without facilities or elements ''stranded'' or ''cut-off'' from the remainder of the bulk electric system.[68]

Requests for Rehearing

46. NERC requests that the Commission clarify the directives to implement exclusions E1 and E3 so that they do not apply to generator interconnection facilities for bulk electric system generators identified in inclusion I2. NERC states that the Commission does not state whether ''implementation'' applies to Phase 1 or Phase 2 or how the implementation would be effectuated without a change to the definition of bulk electric system.[69] Specifically, NERC requests that the Commission clarify how these directives should be reconciled with the plain language of the exclusions.

47. NERC opines that the Commission's use of the term ''tie-line'' is potentially confusing for stakeholders and claims that it could create additional complications with the implementation of the Commission's directive unless the Commission clarifies its use of this term. NERC also requests that the Commission reconcile the directives with the express language of the definition. NERC states that the Commission acknowledged in the Final Rule that exclusion E1 as written does not prevent the radial tie-line operating at or above 100 kV from the high side of the step-up transformer to the bulk electric system from being excluded.

48. Similarly, NRECA requests that the Commission clarify that, when the Commission directed NERC to implement exclusion E1 it was not seeking to directly modify the definition or the exclusions with respect to generator tie-lines, but rather that it was directing that this issue be addressed in the Phase 2 process as required by FPA section 215(d)(4). NRECA states that the tie-line distinction is an important directive that must be evaluated under the Phase 2 process, and implemented only after the Commission rules on the further revision to the definition that is proposed by NERC at the conclusion of the Phase 2 process. NRECA states that NERC should be given an opportunity to address the Commission's concern and present a response for consideration as part of a rule emanating from the Phase 2 process. NRECA adds that such a directive is consistent with the

[63] NERC Petition at 34.

[64] *See* NERC BES Petition at 36.

[65] *See* Order No. 743–A, 134 FERC ¶ 61,210 at P 93. *See also* NERC BES Petition at 36.

[66] NERC ROP Petition, Att. 1 (''Proposed Appendix 5C to the Rules of Procedure, Procedure for Requesting and Receiving an Exception from the NERC Definition of Bulk Electric System, Section 10.1'') at 16: ''In the case of an Element not included in the BES by application of the BES Definition but for which an Inclusion Exception is approved, the Owner shall submit a proposed implementation plan to the Regional Entity detailing the schedule for complying with any Reliability Standards applicable to the newly included Element. The Regional Entity and Owner shall confer to agree upon such schedule.''

[67] *See Mandatory Reliability Standards for the Bulk-Power System,* Order No. 693, FERC Stats. & Regs. ¶ 31,242, at P 186 *order on reh'g,* Order No. 693–A, 120 FERC ¶ 61,053 (2007).

[68] Order No. 773, 141 FERC ¶ 61,236 at PP 164–165, 214.

[69] NERC separated the development of the revised definition into two phases. Phase 1 culminated in the language of the proposed modified definition that is the primary subject of this Final Rule. Phase 2, which is ongoing, intends to focus on other industry concerns raised during Phase 1. Order No. 773, 141 FERC ¶ 61,236 at P 52 n.46.

Commission's obligation to remand to the ERO any proposed Reliability Standard or a modification to a Reliability Standard that the Commission disapproves in whole or in part.

49. APPA, TAPS and ELCON contend that the Commission's interpretation will prevent radial systems and local networks from qualifying for exclusions E1 and E3, respectively, if they connect to bulk electric system generators identified in inclusion I2 with gross nameplate ratings between 20 MVA and 75 MVA. They also argue that the Commission's directive fails to give due weight to NERC's expertise. APPA, TAPS and ELCON contend that the directive will force many more facilities into the exception process. They also argue that the Commission does not have the authority to direct NERC to implement the definition contrary to its plain meaning. Further, they contend that the Commission's concern is already being addressed in the Phase 2 process. APPA, TAPS and ELCON state that, if the Commission determines it needs more information to address its concerns with respect to tie-lines for bulk electric system generators identified in inclusion I2, it should direct NERC to submit a report regarding how entities utilize this exclusion.

Commission Determination

50. We grant rehearing to the extent that, rather than direct NERC to implement exclusions E1 and E3 as described above, we direct NERC to modify the exclusions pursuant to FPA section 215(d)(5) to ensure that generator interconnection facilities at or above 100 kV connected to bulk electric system generators identified in inclusion I2 are not excluded from the bulk electric system. We find that the Phase 2 standard development process is an appropriate means to address the Commission's concern. If NERC chooses to propose a different solution, it must demonstrate that its proposal is equally effective or efficient to ensure that generator interconnection facilities that connect generators included in the bulk electric system to the grid, and that are at or above 100 kV, are included in the bulk electric system and must support any alternate proposal with a technical analysis sufficient for the Commission to make an informed decision.

51. We deny rehearing regarding arguments that the Commission did not give due weight to NERC's technical justification. As an initial matter, the Final Rule focused on a generator interconnection facility that connects the bulk electric system generator to the interconnected transmission network at a voltage of 100 kV or above.[70] The language was accompanied by the following:

Radial System with BES Generation[71]

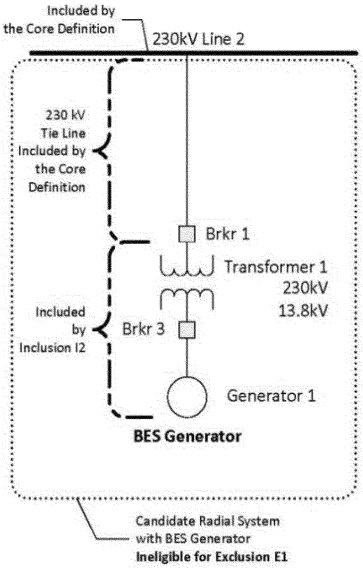

In the Final Rule, the Commission found that NERC's rationale did not support excluding generator interconnection facilities operated at or above 100 kV connecting bulk electric system generators to the bulk electric system.[72] NERC based its proposal on the premise that a single point of failure causing the radial systems to separate from the bulk electric system results in a loss of a limited amount of generation that will not have an adverse impact on reliability. In the Final Rule, however, the Commission noted that there are other reliability concerns that NERC did not address. For example, the Commission noted that ''both the radial line emanating from a generator and the portion of the bulk electric system to which it is connected have protective relays that require coordination to prevent the lines from tripping. The generator needs to coordinate the protective relays with transmission operators, otherwise there may not be adequate information to prevent a fault on the radial line from causing cascading outages on the bulk electric system.'' [73] The Commission also relied on the fact that an ''adverse reliability impact . . . is an extreme result that should not occur from the loss of a single tie-line for any sized generator''

[70] Order No. 773, 141 FERC ¶ 61,236 at P 165.

[71] Order No. 773, the Commission included this diagram identified as ''Radial System with BES Generation.'' *See* Order No. 773, 141 FERC ¶ 61,236 at PP 165.

[72] Order No. 773, 141 FERC ¶ 61,236 at PP 165–168.

[73] Order No. 773, 141 FERC ¶ 61,236 at P 166 and n.150 (citing, Reliability Standards, TPL–002–0b and IRO–004–2).

because a single event that results in an adverse reliability impact violates planning and operating criteria in Commission approved Reliability Standards.[74] The Final Rule also explained that, in general, ''it is appropriate to have the bulk electric system contiguous,'' without facilities ''stranded'' or ''cut off.'' [75] As shown in the diagram above, inclusion I2 (generator resources) includes the generator and the generator terminals through the high-side of the step-up transformer(s) connected at a voltage of 100 kV or above.[76] However, NERC's interpretation of exclusion E1 would have excluded the 230 kV generator interconnection facility from the high side of the step-up transformer to the interconnected transmission network. This would be inconsistent with the Commission's statement in the Final Rule that, if the generator is necessary for the operation of the interconnected transmission network, it is generally appropriate to include the generator interconnection facility radial tie-line operating at or above 100 kV that delivers the generation to the bulk electric system.[77]

52. We disagree with APPA that the directive to include 100 kV and above generator interconnection facilities connected to bulk electric system generators will result in making the owners of these qualifying 100 kV and above generator interconnection facilities subject to the full range of transmission planner, transmission owner and transmission operator Reliability Standards and requirements. As we state above, in cases of generator interconnection facilities for bulk electric system generators where the generator owner also owns the generator interconnection facility, NERC has determined on a case-by-case basis which entities require registration as transmission owners/operators and identified sub-sets of applicable Reliability Standard requirements for these entities rather than automatically subjecting such generators to the full scope of standards applicable to transmission owners and operators.[78]

D. Arguments Regarding the Need to Modify the Inclusions and Exclusions

53. In the NOPR, the Commission requested comment on certain aspects of NERC's petition to better understand the application of the specific inclusions and exclusions. NERC and other entities filed comments that assisted in our understanding of the parameters of the definition. In the Final Rule, in addition to the ''core'' definition, the Commission adopted many of these explanations and approved without modification most of the specific inclusions and exclusions, finding that they add clarity regarding which elements are part of the bulk electric system as compared to the existing definition.[79] Several entities request rehearing of the approval of specific inclusions and exclusions that the Commission approved without modification. On rehearing, entities argue that the Commission erred by failing to direct NERC to (1) Eliminate inclusion I4 (dispersed power producing resources); (2) modify or eliminate the generator thresholds in exclusions E1 and E3; and (3) eliminate exclusion E3(b), the criterion that power cannot flow out of a local network in order to be eligible for exclusion from the bulk electric system.

1. Inclusion I4 (Dispersed Power Producing Resources)

Order No. 773

54. Inclusion I4 includes in the bulk electric system dispersed power producing resources with aggregate capacity greater than 75 MVA (gross aggregate nameplate rating). In the Final Rule, the Commission approved inclusion I4 finding that it provides useful granularity in the bulk electric system definition. The Commission also found that the language in inclusion I4 regarding the collector system language is consistent with language in the Registry Criteria, section III.c.2 and agreed that it is appropriate ''to expressly cover dispersed power producing resources utilizing a system designed primarily for aggregating capacity.'' [80]

Requests for Rehearing

55. AWEA states that the Commission did not base its approval of inclusion I4 on sufficient evidence to show inclusion I4 would result in any material reliability benefit. AWEA contends that neither the Final Rule nor the record demonstrate that the inclusion of dispersed generation resources would help protect the reliable operation of the interconnected transmission network. AWEA contends that all evidence in the record indicates that dispersed generation resources are unlikely to affect the reliability of the interconnected transmission network. AWEA argues that the Commission's decision ''to modify the definition regardless of the record on dispersed generation resources shows the Commission's decision was arbitrary and capricious . . . and not the result of reasoned decision-making.''[81]

56. AWEA argues that the electrical equipment at the point of interconnection with the bulk electric system is a more appropriate point for delineating between the bulk electric system and non-bulk electric system electrical components because the point of interconnection for a wind project comprised of more than 75 MVA of generation and operating at more than 100 kV is the only part of the wind project that could reasonably affect bulk electric system reliability.

57. AWEA adds that the Commission erred in agreeing with NERC's suggestion to include individual dispersed generators and their collector systems in approving the modification because this inclusion was not based on evidence supported by the record. According to AWEA, the typical electrical layout of a wind plant will be aggregated onto an electrical string of the collector array that operates at voltages ''well below'' 100kV, so losing a single electrical string or even multiple electrical strings will typically only result in the loss of a few dozen MWs of generation.[82] AWEA also states the capacity value contribution that grid operators typically assume for wind projects for meeting peak electricity demand is less than 20% of the nameplate capacity of the wind project. AWEA maintains that such minimal impacts fall well below the 75 MVA threshold that inclusion I4 seeks to establish, as well as any reasonable threshold for determining which electrical components are likely to cause a reliability problem on the bulk electric system. Alternatively, AWEA states that if the Commission does not modify the definition as AWEA proposes it could recognize that all wind turbines installed in the United States are not subject to the modified definition.

[74] *Id.*

[75] Order No. 773, 141 FERC ¶ 61,236 at P 165.

[76] Order No. 773, 141 FERC ¶ 61,236 at P 85. Inclusion I2 states ''Generating resource(s) with gross individual nameplate rating greater than 20 MVA or gross plant/facility aggregate nameplate rating greater than 75 MVA including the generator terminals through the high-side of the step-up transformer(s) connected at a voltage of 100 kV or above.''

[77] Order No. 773, 141 FERC ¶ 61,236 at P 167.

[78] In addition, in Docket No. RM12–16–000, NERC has submitted proposed revisions to certain Reliability Standards to assure that generator interconnection facilities are adequately covered rather than subjecting them to all of the requirements applicable to transmission owners and operators.

[79] Order No. 773, 141 FERC ¶ 61,236 at P 39.

[80] Order No. 773, 141 FERC ¶ 61,236 at P 112.

[81] AWEA Request for Rehearing and Reconsideration at 3.

[82] *Id.*

Commission Determination

58. The Commission denies rehearing and confirms its finding that inclusion I4 provides useful granularity in the bulk electric system definition.

59. The Commission's approval of the bulk electric system definition including inclusion I4 is adequately supported by the evidence in the record in this proceeding. In the Final Rule, the Commission agreed with NERC's statement that the purpose of this inclusion is to include variable generation (e.g., wind and solar resources).[83] The Commission also agreed with NERC that, while such generation could be considered subsumed in inclusion I2 (because the gross aggregate nameplate rating of the power producing resources must be greater than 75 MVA), it is appropriate for clarity to add this separately-stated inclusion to expressly cover dispersed power producing resources using a system designed primarily for aggregating capacity.[84]

60. The Commission further concluded that, although dispersed power producing resources (wind, solar, etc.) are typically variable suppliers of electrical generation to the interconnected transmission network, certain geographical areas depend on these generation resources for the reliable operation of the interconnected transmission network.[85] In addition, having considered NERC's rationale for adopting inclusion I4 in its petition and NOPR comments, the Commission concluded that owners and operators of dispersed power producing resources that meet the 75 MVA gross aggregate nameplate rating threshold are, in some cases, already registered and have compliance responsibilities as generator owners and generator operators. The threshold of 75 MVA for plants is well established in the NERC Statement of Compliance Registry Criteria and consistently applicable to all generating facilities.[86] Therefore, the Commission denies rehearing that it did not adequately support its approval of inclusion I4.

2. Generator Thresholds in Exclusions E1 and E3

Order No. 773

61. In its petition, NERC explained that conditions ''b'' and ''c'' of exclusion E1 allow some generation to be connected to a radial system while still qualifying for the radial systems exclusion (aggregate capacity less than or equal to 75 MVA). Similarly, with respect to exclusion E3, NERC explained that the purpose of local networks is to provide local distribution service, not to provide transfer capacity for the interconnected transmission network, thus some generation within a local network would be appropriate.[87] NERC stated, that the maximum amount of generation allowed on the radial facility per exclusion E1 conditions ''b'' and ''c'' is consistent with the aggregate capacity threshold presently provided in the Registry Criteria for registration as a generator owner or generator operator (75 MVA gross nameplate rating). In the Final Rule, the Commission found NERC's explanations for limiting generation capacity reasonable because the amount of connected generation allowed by conditions ''b'' and ''c'' is intended to have limited benefit to the reliability of the interconnected transmission network and pose no reliability risk to the interconnected transmission network.[88]

Requests for Rehearing

62. Holland raises three arguments on rehearing. First, Holland states that the Commission should have revised the generator thresholds in exclusion E1 for radial systems and in exclusion E3 for local networks to ensure that they do not inappropriately include local distribution facilities. Second, Holland argues that the Commission failed to respond to Holland's alternative recommendation that the Commission modify the generation limits in exclusions E1 and E3 by basing the limit on net generation. Third, Holland argues that the Commission erred in its conclusion with respect to the meaning of ''emanates from a single point of interconnection'' in exclusion E1.

63. Holland states that it supports the exclusion of radial systems from the bulk electric system but that exclusion E1 will still capture facilities used in local distribution. Holland notes that in its NOPR comments, it recommended that the Commission revise exclusion E1 to remove the generation threshold from exclusion E1(c) but that the Commission failed to consider and respond to Holland's comments. Holland also argues that the Commission erred by (1) failing to state a factual basis upon which the Commission reached its decision not to exclude from the bulk electric system radial systems that also serve load and (2) citing no record evidence to support its rejection of Holland's comments. Holland maintains that the effect of approving exclusions E1 and E3 without the modification it proposed is that only those systems electrically isolated from the bulk electric system or those with no generation above the threshold size will meet the criteria for exclusion E1. Holland contends that the Commission's approval of the exclusion prejudges the outcome of the Seven Factor Test by arbitrarily approving criteria without having the results of any such test, or without having a specific context in which to apply the criteria.

64. Similarly, Holland argues that the Commission erred by failing to remove or alter the generator thresholds from exclusion E3 local networks, and that approving exclusion E3 with the generator thresholds encroaches on facilities used in the local distribution of electric energy. Holland states that the Commission erred by not directing any changes to the connected generation limitation, and that the Commission erroneously relied on the fact that the generation limits were consistent with the NERC Registration Criteria. Holland argues that the Commission finding could make some local distribution facilities that do not meet exclusion E3 subject to Reliability Standards and Commission authority. According to Holland, the Commission must revise exclusion E3 regarding local networks to ensure that the definition does not conflict with the FPA section 215 prohibition against regulating facilities used in the local distribution of electric energy. Holland states that the Commission did not address how local networks with internal generation consumed internally differ from local distribution facilities with lesser amounts of or no generation, or how this interpretation is consistent with the Commission's determination that ''local distribution'' has a consistent meaning throughout the FPA. Holland also claims that, despite having decided to use the Seven Factor Test for local

[83] Order No. 773, 141 FERC ¶ 61,236 at P 115. *See also* NERC BES Petition, Exhibit D, August 19, 2011 Consideration of Comments, at 416: ''Although dispersed power producing resources (wind, solar, etc.) can be intermittent suppliers of electrical generation to the interconnected transmission network, the [standard drafting team] has been made aware of geographical areas that depend on these types of generation resources for the reliable operation of the interconnected transmission network which has prompted the development of Inclusion I4. . . .'' *See also* NERC BES Petition, Exhibit D, ''Consideration of Comments on Second Draft of the Definition of the Bulk Electric System'' at 160: ''The [standard drafting team] disagrees with excluding dispersed power producing sources such as wind and solar from the BES definition. These resources comprise a significant share of the North American resource mix.''

[84] Order No. 773, 141 FERC ¶ 61,236 at P 115.

[85] Order No. 773, 141 FERC ¶ 61,236 at P 115. *See also* the ERCOT daily wind integration reports at: *http://www.ercot.com/gridinfo/generation/windintegration/.*

[86] Order No. 773, 141 FERC ¶ 61,236 at P 112.

[87] NERC Petition at 22.

[88] Order No. 773, 141 FERC ¶ 61,236 at PP 158, 164, 201, 207, 209, 211, 216.

distribution determinations, the Commission made factual determinations without any application of the Seven Factor Test.

65. Further, Holland argues that the Commission failed to consider Holland's alternative comments that the Commission modify the generation limit in exclusion E3 by basing the limit on net generation. Holland contends that exclusion E3(a) arbitrarily ignores the development and practice of local networks operated by municipal utilities. Holland maintains that, historically, municipal utilities with internal generation installed to meet the municipality's distribution load sized the generation comparably to the local distribution load. Holland contends that the Commission disregarded that history and assumes that all internal generation, regardless of how remote, connects to and is exported to the bulk electric system. According to Holland, the Commission compounded its error by disregarding Holland's comments stating that local networks should be able to deliver power to the bulk electric system.

66. Holland also contends that the Commission dismissed its comment that the Commission should interpret the phrase ''emanates from a single point of interconnection'' for radial systems to mean a single electrical point, such as a single bus or normally connected bus work within a substation, without citing any record evidence equating electrical points with physical locations.

Commission Determination

67. The Commission denies rehearing on these issues raised by Holland. Pursuant to section 215(d)(2) of the FPA, the Commission gives due weight to the technical expertise of the ERO with respect to the content of a Reliability Standard or definition.[89] In this instance, NERC explained that exclusion E1(c) addresses limited amounts of generation that are installed within a radial system and are intended to serve local load within that radial system.[90] In the NOPR, the Commission requested comment about the delivery or injection of power from the radial systems described in these exclusions. NERC responded that, ''because of the limitation of the generation in exclusion E1(c), the power generated on the radial system would be delivered to the embedded load within the radial system and injected into the bulk electric system in very limited quantities . . .'' and ''subjecting the elements associated with this type of radial system to all the Reliability Standards has limited benefit to the reliability of the interconnected transmission network.'' [91] Further, NERC found that ''it is more appropriate to identify these elements through the 'the applicability in specific standards where a reliability benefit can be identified.' '' [92] Holland's arguments were directed to unlimited generation for radial systems and local networks, but the Commission found NERC's explanations for the limitations reasonable and approved this aspect of the exclusion.[93] Removing the generator limitation or using net generation in excess of load would also be inconsistent with the bright-line concept and NERC's approach that the definition should be based on physical characteristics and not based on function. Also, the NERC standards drafting team concluded the following regarding generator size thresholds:

> [t]he vast array of functional qualities of generation does not lend itself to a 'bright-line' concept of identifying BES Elements. Therefore the SDT has opted for the size threshold designation of generating facilities and allows for use of the Exception Process for further analysis of the facility and potential exclusion from or inclusion to the BES.[94]

68. Holland raised the same argument with respect to the generating limits in exclusion E3. NERC provided ample justification for its selection of generator thresholds. As NERC stated in its ''LN Technical Justification'' paper in Exhibit G of its petition, including a restriction on generation in a local network ''minimizes the contribution and influence the local network may have over the neighboring [e]lements of the [bulk electric system] by limiting both the magnitude and the function of the connected generation. NERC chose the threshold of 75 MVA to provide consistency with the criteria applied in the ERO's [Registry Criteria] regarding the registration for entities owning and operating generation plants in aggregate.'' [95] In the Final Rule, the Commission found reasonable NERC's rationale for limiting both the magnitude and the function of a local network by limiting the amount of connected generation and that use of the generator thresholds was consistent with the existing thresholds in the Commission-approved NERC Registry Criteria.[96] Thus, the Commission disagrees that it did not provide adequate explanation for rejecting Holland's NOPR arguments on this issue.

69. Holland also argues that the Commission did not consider that exclusion E3 has the possibility of encompassing local distribution facilities. As stated in the Final Rule as well as elsewhere in this order on rehearing, determining whether a facility is part of the bulk electric system is a multi-step process and applying the definition is just one step in that process.[97] If an entity believes its facility is a local distribution facility but after applying the definition and its exclusions the facility is not excluded, the entity may apply to the Commission to determine whether a facility is used for local distribution. The Commission disagrees, however, that it made factual determinations in the Final Rule without application of the Seven Factor Test, or arbitrarily adopted criteria that prejudge that test. The Commission approved NERC's bright-line approach to the definition, and the definition by itself is not intended to resolve all bulk electric system determinations. An entity's application of the definition as a whole, inclusive of the inclusions and exclusions, is the first step in determining whether the element is part of the bulk electric system and is a separate inquiry from the Commission's use of the factors in the Seven Factor Test in a local distribution determination. Further, as we stated in the Final Rule, the Commission will apply the factors in the Seven Factor Test, plus other factors, as the starting point for making local distribution determinations on a case-by-case basis.[98] In sum, the Commission's approval of NERC's process establishes a process for determining whether a facility is part of the bulk electric system and is not making specific determination about particular facilities.

70. Further, in the Final Rule, the Commission addressed Holland's argument about the meaning of ''emanates from a single point of connection.'' Specifically, in the Final Rule the Commission dismissed Holland's contention that the phrase can refer to multiple buses. The Commission noted that NERC, in the standard development process, considered the issue and concluded that radial systems ''cannot have multiple connections at 100 kV or higher. Networks that have multiple connections at 100 kV or

[89] 16 U.S.C. 824o(d)(2).

[90] Order No. 773, 141 FERC ¶ 61,236 at P 159.

[91] NOPR, 139 FERC ¶ 61,247 at P 160.

[92] *Id.* at P 161 (citing NERC's NOPR Comments at 21–22).

[93] Order No. 773, 141 FERC ¶ 61,236 at P 164.

[94] NERC BES Petition, Exhibit D, August 19, 2011, Consideration of Comments at 439.

[95] NERC BES Petition, Exhibit G at 3.

[96] Order No. 773, 141 FERC ¶ 61,236 at P 216.

[97] Order No. 773, 141 FERC ¶ 61,236 at P 216.

[98] Order No. 773, 141 FERC ¶ 61,236 at P 71.

higher may qualify under exclusion E3.'' [99]

3. Exclusion E3(b) and Power Flows

Order No. 773

71. Exclusion E3 criterion (b) specifies that, to qualify for the local network exclusion, power can only flow into the local network and the local network does not transfer energy originating outside the local network for delivery through the local network. In its NOPR comments NERC elaborated by stating that, to be considered for exclusion pursuant to criterion (b), generation produced inside a local network cannot be transported to other markets outside the local network. NERC also stated that criterion (b) applies in both normal and emergency operating conditions. In the Final Rule the Commission found NERC's explanation reasonable and approved exclusion E3 criterion (b).[100]

Requests for Rehearing

72. Holland and Dow state that the Commission erred by not modifying exclusion E3 to allow it to apply even if some power flowed from the local network to the bulk electric system. Holland notes that the Commission's explanation that, if facilities are capable of supplying power when needed under any normal or emergency operating condition these facilities would forfeit their designation as local networks under exclusion E3, is premised incorrectly ''on a presumption that the facilities in question perform a transmission function, rather than a distribution function.'' [101] Holland states that courts have held that the Commission does not have authority over facilities used in local distribution, not just over those facilities used solely in local distribution. Accordingly, Holland states that simply because the ''facilities are capable of being called upon to support the bulk electric system, does not mean that is how those facilities are used in the normal course of business.'' [102]

73. Dow states that the Commission's resolution regarding the requirement that power may only flow into and not out of a local network requires clarification. Dow notes that, in its NOPR comments, it requested that the Commission clarify that exclusion E3(b) only prohibits energy originating outside the local network from being transferred through the network and into the bulk electric system, and does not prohibit energy generated by resources connected to the local network for delivery into the bulk electric system. Dow states this understanding is consistent with exclusion E3(a) allowing up to 75 MVA of non-retail generation to be attached to a local network. Dow maintains that it would not make sense to permit non-retail generation resources to be attached to local networks if output from such resources could not be delivered into the bulk electric system for purposes of making non-retail sales to downstream buyers. Dow asserts that, while the Commission suggested that the issue be addressed further in Phase 2, the Commission appears to have adopted an interpretation of the local network exclusion that is inconsistent with Dow's requested clarification. According to Dow, for the local network exclusion to be applicable, the Commission stated that ''generation produced inside a local network should not transport power to other markets outside the local network,'' but that the Commission indicated it could be addressed further in Phase 2. According to Dow, it is not clear whether and to what extent the Commission intended to resolve this issue in the Final Rule and, if it did, what additional issues would be eligible for further consideration in the Phase 2 process. Dow also requests that the Commission clarify which of Dow's concerns it can raise in the Phase 2 process.

74. Snohomish agrees with the Commission's conclusion that the ''no outflow'' condition in exclusion E3 applies in both normal and emergency circumstances. However, Snohomish notes that, in the Phase 2 process, NERC is examining the types of ''emergency'' that should be considered in examining the flow conditions in a local network. Snohomish requests that the Commission clarify that the appropriate, technically justified definition of ''emergency'' should be based upon the technical analysis now being performed as part of Phase 2 and that the Final Rule does not restrict the examination of this question. Snohomish also requests that the Commission clarify that, in Phase 2, NERC is free to develop a technically justified threshold for outflow that would not disqualify a local network under exclusion E3.

75. In addition, while agreeing that historical records of power flow on a local network form an appropriate evidentiary basis for demonstrating that power only flows into a local network, Snohomish requests that the Commission clarify (1) that entities can establish power flows through more than just historical records and (2) a local network will remain eligible for exclusion if it contains temporary reversals of flows resulting from extreme and unlikely emergency conditions. Otherwise, according to Snohomish, local networks that rely on historical flow data could, if an unusual event happens causing a temporary outflow, suddenly become part of the bulk electric system.

Commission Determination

76. We deny the requests for rehearing of Dow and Holland on the power flow issue. As part of its rationale for developing the local network exclusion, NERC explained that power always flows in the direction from the interconnected transmission network into the local network.[103] NERC also explained that ''[l]ocal networks provide local electrical distribution service and are not planned, designed or operated to benefit or support the balance of the interconnected transmission network.'' [104] Further, NERC explained that the reliability of the interconnected transmission network is not impacted by the existence or absence of a local network. Exclusion E3 will satisfy this principle because NERC crafted exclusion E3 to ensure reliability is not adversely impacted by the disconnection of the local network.[105] NERC confirmed that, pursuant to criterion (b), exclusion E3 applies if generation produced inside a local network is not transported to other markets outside the local network. NERC stated that prohibitions on outbound power flow and transportation of power to other markets beyond the local network apply in all conditions, both normal and contingent, and will not exclude facilities which may contribute power flow into the bulk electric system under contingent or unusual circumstances. NERC's Local Network (LN) Technical Paper further explains these statements:

> By restricting the flow direction to be exclusively into the network at its connection points to the BES and precluding the network from providing transmission wheeling service, this exclusion characteristic further ensures that the local network is providing only a distribution service, and is not contributing to, nor is necessary for, the

[99] Order No. 773, 141 FERC ¶ 61,236 at P 142 (citing NERC BES Petition, Exhibit E, ''Complete Development Record of the Proposed Revised Definition of 'Bulk Electric System,' Consideration of Comments on Initial Ballot—Definition of BES,'' at 259).

[100] Order No. 773, 141 FERC ¶ 61,236 at P 228.

[101] Holland Request for Rehearing at 16.

[102] Holland Request for Rehearing at 15–16 (citing *Detroit Edison* v. *FERC,* 334 F.3d 48, 54 (DC Cir. 2003)).

[103] NERC BES Petition at 22.

[104] *Id.*

[105] *See* Order No. 773, 141 FERC ¶ 61,236 at P 189.

reliable operation of the interconnected electric transmission network.[106]

77. In approving exclusion E3, the Commission found NERC's explanations for the applicability of exclusion E3(b) to be reasonable.[107] The Commission also agreed with NERC's explanation that, with respect to exclusion E3(b), generation produced inside a local network should not be transported to other markets outside the local network.[108]

78. The Commission rejects Holland's contention that the Commission's finding is premised on a presumption that ''the facilities in question perform a transmission function.'' [109] One of NERC's overarching principles in revising the definition was to establish a bright-line definition that will eliminate discretion in application of the revised definition, and the local network exclusion is consistent with that principle.[110] If an entity applies the definition and the exclusions to an element and finds that the element is included by application of the definition of the bulk electric system, it may avail itself of the exception process for a determination that the element should be excluded from the bulk electric system or seek a determination from the Commission that the element is used in local distribution.

79. In its request for rehearing, Dow seeks clarification regarding what issues were resolved in the Final Rule and what it may raise in Phase 2. As stated above, NERC developed exclusion E3 with the bright-line concept in mind and its conclusion that power may not be delivered from a local network to the bulk electric system. The Commission approved exclusion E3 with this understanding.[111] Thus, if power flows out of a local network to the bulk electric system, it is not eligible for the exclusion, no matter the type of generation. However, we recognize that in crafting the revised definition to be responsive to Order No. 743, entities raised additional issues that, due to time constraints in meeting the compliance deadline set in Order No. 743, NERC postponed to Phase 2 in which it is focusing on other industry concerns raised during Phase 1. Thus, if Dow believes that a local network should be allowed to have some non-retail generation that delivers power to the bulk electric system, we believe that this issue is better suited for vetting through the NERC standard development process, including the Phase 2 process.[112]

80. With regard to the Snohomish request for clarification of additional terms in the Phase 2 process, the standard development process allows NERC to develop new or revised Reliability Standards or definitions to address any issues and the Final Rule does not restrict this process. NERC may propose changes to the bulk electric system definition with supporting technical justification for submission to the Commission.

81. Snohomish requests that the Commission clarify that entities can establish power flows through more than just historical records. Snohomish also seeks clarification that a local network will remain eligible for exclusion if it contains temporary reversals of flows resulting from extreme conditions. We clarify that historical records are not the only basis for establishing power flows. However, we deny clarification that temporary reversals of flows should not disqualify a local network from being treated as a local network because, as written and presented to us in this proceeding, exclusion E3(b) does not permit power flows from the local network in any circumstances.[113] Nevertheless, similar to our response to Dow above, Snohomish can raise its concerns through the NERC standards development process in Phase 2.

E. NERC Exception Process and Commission Local Distribution Determinations

Order No. 773

82. In the Final Rule, the Commission approved NERC's exception process to add elements to, and remove elements from, the bulk electric system, on a case-by-case basis.[114] However, the Commission determined that the Commission, rather than NERC, will determine on a case-by-case basis whether an element or facility is used in local distribution and will apply the conditions set forth in the Seven Factor Test.[115]

Requests for Rehearing

1. Jurisdictional and Due Process Issues

83. A number of entities claim that, or are unsure of whether, the Commission has imposed duplicative processes (the NERC exception process and the Commission process for making local distribution determinations) for determining whether particular facilities are part of the bulk electric system.[116] TAPS and ELCON question whether NERC would be bound by prior Commission determinations on local distribution and whether the Commission would reopen NERC determinations, and they request that on rehearing the Commission state that it will make local distribution determinations only in connection with review of NERC exception decisions. TAPS and ELCON state that the Commission should clarify that it will address local distribution issues if raised in connection with review of NERC exception determinations, so a full record can be developed through a single process. Alternatively, TAPS and ELCON request clarification (1) of how the Commission intends the process for making local distribution determinations to interact with the NERC exception process, especially when similar facts are at issue, and (2) that entities are not foreclosed from making all applicable arguments to NERC in the exception process.

84. NRECA states that the Commission's role as primary arbiter of a local distribution decision and its reliance on the Seven Factor Test raises ambiguity and must be clarified. NRECA questions whether the process runs concurrently with the NERC exception process and, if not, which process will be conducted first. NRECA also questions whether ''an entity that is currently registered and seeks to remove itself from the registry based on the local distribution distinction, or, conversely, the ERO that desires to include an entity not currently on the registry based on the absence of local distribution facilities, would first have to engage a proceeding before the Commission. . . .'' [117] NRECA states that a multi-tiered process will be expensive and unnecessarily time consuming for the Commission, NERC and the affected entities. NRECA further questions what rules and timeframe the Commission will use and whether the Commission considered the greater

[106] NERC BES Petition, Exhibit G at 3.

[107] Order No. 773, 141 FERC ¶ 61,236 at P 193.

[108] Order No. 773, 141 FERC ¶ 61,236 at P 231.

[109] Holland Request for Rehearing at 15.

[110] *See, e.g.,* NERC BES Petition at 15.

[111] Order No. 773, 141 FERC ¶ 61,236 at PP 201, 205, 218, 228.

[112] Indeed, this issue is one that the NERC standard drafting team is considering in Phase 2. *See* the NERC Standard Authorization Request at 3: ''[d]etermine if there is a technical justification to support allowing power flow out of the local network under certain conditions. . . .'' *Available at:http://www.nerc.com/docs/standards/sar/SAR_BES_Definition_Phase_2_final_071012_clean.pdf.*

[113] *See* Order No. 773, 141 FERC ¶ 61,236 at P 228.

[114] Order No. 773, 141 FERC ¶ 61,236 at P 251 (citing Order No. 743, 133 FERC ¶ 61,150 at P 16).

[115] Order No. 773, 141 FERC ¶ 61,236 at P 252.

[116] *E.g.,* NRECA, TAPS, ELCON and NYPSC.

[117] NRECA Motion for Clarification, or in the Alternative, Request for Rehearing at 5–6.

expense of running two processes for small entities.

85. Holland argues that applying the definition and exception process unlawfully subjects facilities used in the local distribution of electric energy to NERC authority through the exception process before a determination is made on whether those facilities serve a local distribution function.[118] Holland claims that the Final Rule is internally inconsistent because it directs entities to seek an exception from NERC before the Commission will apply the Seven Factor Test to determine whether the facilities are subject to regulation under the FPA. Holland states that the Commission must prohibit NERC from exercising any authority over any facilities while the owners and operators of such facilities petition the Commission for a determination that they are used in the local distribution of electric energy.

86. NYPSC contends that the exception process is an impermissible approach to exercising jurisdiction. NYPSC claims that, although the definition states that it ''does not include facilities used in the local distribution of electric energy,'' the Commission effectively acknowledged that such facilities would be placed under its jurisdiction by establishing a process whereby entities may seek to demonstrate that the facilities are not necessary for operating the interconnected transmission network, or are used in local distribution.

87. NYPSC and NARUC claim that the Commission failed to provide adequate notice and comment regarding the decision to use the Seven Factor Test and the Commission's decision to itself make determinations of whether a facility is used in local distribution. They state the Final Rule is the first time the Commission established a process for petitioning for a local distribution determination and argue that the Commission has not substantiated its decision to apply the Seven Factor Test. NARUC states that the Commission should develop a full record to determine what criteria ''would be lawfully applied if the Commission were to make case-by-base local distribution determinations under section 215.'' [119] NYPSC states that the Commission failed to comply with the Administrative Procedure Act (APA) requirement that agencies provide notice of a proposed rule and a meaningful opportunity for parties to comment.

Commission Determination

88. The Commission denies rehearing on the issues related to the exception process and the Commission making local distribution determinations. The Commission believes that entities misconstrue the function of the NERC exception process and the Commission's local distribution determinations. Accordingly, we reiterate and expand on those functions below.

89. As explained below, the two processes are separate, not concurrent and will be used for different determinations. In the Final Rule, the Commission found that ''NERC's case-by-case exceptions process is appropriate to determine the technical issue of whether facilities are part of the bulk electric system'' and that ''the jurisdictional question of whether facilities are used in local distribution should be decided by the Commission.''[120]

90. The Commission also stated that we expect that the ''core'' definition together with the exclusions ''should provide a reasonable means to accurately and consistently determine on a generic basis whether facilities are part of the bulk electric system.'' [121] Also, the Commission explained that most local distribution facilities will be excluded by the 100 kV threshold or exclusion E3 without needing to seek a Commission jurisdictional determination. However, if after applying the definition and exclusions, an entity believes its facility is used in local distribution, it must petition the Commission for a determination, and the Commission will apply the factors in the Seven Factor Test, plus other factors, as the starting point for making local distribution determinations.[122] This inquiry is a distinct process not made in connection with review of NERC exception process decisions. In response to NRECA's question regarding what process an entity or NERC would use with respect to a local distribution determination, as stated above, the Commission will decide all local distribution determinations.

91. All inquiries that do not involve a question of whether a facility is used in local distribution (i.e., whether the facility is or is not part of the bulk electric system) are to be presented through the NERC exception process. In other words, if an entity believes its facilities are non-local distribution facilities but nevertheless are incorrectly included by application of the bulk electric system definition and its inclusions and exclusions, it should use the NERC exception process to determine whether the facilities in question should be excluded from the bulk electric system. In response to the questions about appeals to the Commission, as stated in the Final Rule, an entity may appeal a final NERC exceptions process decision to the Commission.[123] In response to TAPS and ELCON's request, we clarify that, in the exception process, entities have the option of making all applicable arguments that a facility should not be included in the bulk electric system.

92. With regard to NRECA's question about the rules and timeframe the Commission will apply, as the Commission stated in the Final Rule, the Commission will assign local distribution inquiries ''RC'' dockets and the determinations will be public proceedings subject to notice and comment requirements which will allow NERC and interested parties to provide input on a petition. We decline to establish a specific timeframe within which we will act because such decisions will be based on the specific facts of each case.

93. In response to Holland's arguments that the Commission improperly included or excluded local distribution facilities in the definition, the Commission notes that, although the bulk electric system definition excludes local distribution facilities, it still may be necessary to factually determine which facilities are used for local distribution or transmission.[124] The Commission stated in the Final Rule that applying the definition and its exclusions is not necessarily the end of the inquiry, and the Commission ultimately determines whether facilities are used in local distribution and thus excluded from the bulk electric system.[125] Thus, if an entity believes its facility is a local distribution facility but after applying the bulk electric system definition including inclusions and exclusions the facility is not excluded, the entity may apply to the Commission to determine whether the facility is used for local distribution. Thus, as explained above, the Final Rule contemplates two separate and distinct processes and does not direct entities to seek an exception from NERC before seeking a local distribution determination from the Commission.

[118] For example, Holland argues that the limitations on exclusion E1 conditions (b) and (c) will still capture facilities used in local distribution and is tantamount to making a factual determination without any application of the Seven Factor Test.

[119] NARUC Request for Rehearing at 7.

[120] Order No. 773, 141 FERC ¶ 61,236 at P 66.

[121] Order No. 773, 141 FERC ¶ 61,236 at P 67.

[122] Order No. 773, 141 FERC ¶ 61,236 at P 69.

[123] Order No. 773, 141 FERC ¶ 61,236 at P 251.

[124] Order No. 743–A, 134 FERC ¶ 61,210 at P 67.

[125] Order No. 773, 141 FERC ¶ 61,236 at P 70.

94. We disagree with Holland's argument that all facilities that NERC reviews through the exception process that the Commission later finds are used in local distribution will have been unlawfully regulated by NERC. NERC, in applying the bulk electric system definition and exception process, established an implementation period for newly identified elements in the bulk electric system before compliance enforcement is initiated. This should provide ample time for the affected entity to request a local distribution determination from the Commission before any compliance obligations are imposed.

95. NYPSC and NARUC take issue with the Commission's decision to apply the factors set forth in the Seven Factor Test when determining whether a facility is used in local distribution. NYPSC and NARUC contend that the Commission deprived them of their due process rights and violated the APA because the Commission stated it will apply the Seven Factor Test without providing entities an opportunity to comment on the Commission's decision.[126] As explained below, we deny rehearing on this issue.

96. Due process requires certain procedural safeguards, including the requirement that a party affected by government action be given ''notice reasonably calculated, under all the circumstances, to apprise interested parties of the pendency of the action,'' [127] and also ''the opportunity to be heard at a meaningful time and in a meaningful manner.'' [128] However, circumstances vary and the sufficiency of the procedures supplied must be decided in light of the circumstances of each case.[129] The Commission assesses due process claims case-by-case based on the totality of the circumstances.[130] In this case, the Commission expressed its concerns with respect to treatment of local distribution facilities in Order Nos. 743 and 743–A and suggested that the Seven Factor Test could be relevant and a possible starting point for local distribution determinations.[131] In addition, in the NOPR in this proceeding, the Commission expressed its concern with NERC's approach by requesting additional explanation from NERC on its proposal regarding how the exception process would handle local distribution facilities. These instances gave fair notice of the Commission's concerns and positions on this issue.

97. Under these circumstances, an additional comment period on the local distribution determination is unnecessary. The Commission has wide discretion in selecting its procedures.[132] The Commission thus rejects NYPSC's claim that the Commission's decision to determine whether facilities are used in local distribution on a case-by-case basis and apply the factors of the Seven Factor Test violated due process.

2. State Involvement in Local Distribution Determinations and the NERC Exception Process; Application of the Seven Factor Test

98. NYPSC, NARUC, NRECA and APPA argue that the Commission did not explain how it will apply the Seven Factor Test or properly acknowledge state involvement in the local distribution process as contemplated by Order No. 888. NYPSC and NARUC request clarification or rehearing on whether, in adopting the Seven Factor Test, the Commission intended to apply the Order No. 888 finding that gives deference to state determinations as to which facilities are transmission and which are local distribution. NYPSC states that the Commission ''indicated in Order No. 888 that it would entertain proposals by public utilities, filed under section 205 of the Federal Power Act, containing classifications for transmission and local distribution facilities'' but required consultation with state regulatory authorities as a prerequisite to making such filings.[133] NRECA maintains the Seven Factor Test should not be determinative in the context of section 215 jurisdiction decisions because the test involves coordination with state regulators and proceedings involving the affected parties and wholesale and retail interests. NARUC and APPA contend that the Commission ignored the circumstances under which a local distribution test would be employed as described in Order No. 888.[134] NARUC states that in Order No. 888, the Commission acknowledged that in making case-by-case determinations concerning local distribution, it would ''take advantage of state regulatory authorities' knowledge and expertise concerning the facilities of the utilities that they regulate . . . defer[ring] to the recommendations by state regulatory authorities concerning where to draw the jurisdictional line under the Commission's technical test for local distribution facilities.''[135] According to NARUC and APPA, rather than deferring to the state's expertise, as it did when it developed the Seven Factor Test, the Commission is relegating the states to commenter status.

99. APPA, NARUC and NRECA express concern that use of the Seven Factor Test may not translate well into the reliability context. NRECA requests clarification that, because of the differences between FPA sections 201 and 215, the Commission will review significantly more than the Seven Factor Test components and will not apply the Seven Factor Test in the same manner it has in section 201 analyses.[136] NRECA argues that section 215 states that NERC and the Commission lack reliability jurisdiction over facilities used in local distribution, which is a different inquiry from the one made in rate cases, where the ''predominant use'' of the facilities may be of significance.[137] NRECA claims it is also different from the determination made when evaluating the Commission's jurisdiction over a facility for purposes of sections 205 and 206 of the FPA. NRECA states that under those analyses, facilities used for both distribution and transmission are treated as Commission-jurisdictional transmission facilities. NRECA contrasts that with section 215 which states that any use of the facility for distribution removes it from NERC's and the Commission's reliability jurisdiction. APPA, NARUC and NRECA claim that, while some of the seven factors may apply, others seem less appropriate to consider when determining whether facilities are local distribution, and the Commission does not define the other factors it may use nor explain how its criteria will adequately differentiate between local distribution and transmission facilities. Similarly, TAPS and ELCON state that

[126] The APA requires agencies to give interested parties an opportunity for ''the submission and consideration of facts, arguments, offers of settlement, or proposals of adjustment when time, the nature of the proceeding, and the public interest permit . . . .'' 5 U.S.C. 554(c)(1) (2006).

[127] *Jones* v. *Flowers,* 547 U.S. 220, 226 (2006) (citation and quotation omitted).

[128] *Mathews* v. *Eldridge,* 424 U.S. 319, 333 (1976) (citations and quotation omitted).

[129] *Id.* 334 (''[D]ue process, unlike some legal rules, is not a technical conception with a fixed content unrelated to time, place and circumstances.'') (citation and quotation omitted).

[130] *See Morrissey* v. *Brewer,* 408 U.S. 471, 481 (1972) (''[D]ue process is flexible and calls for such procedural protections as the particular situation demands.'').

[131] Order No. 743, 133 FERC ¶ 61,150 at PP 37–38, Order No. 743–A, 134 FERC ¶ 61,210 at PP 25, 55, 58, 67–72.

[132] *Pacific Gas and Electric Co.* v. *FERC,* 746 F.2d 1383, 1386 (9th Cir. 1984) (''We must allow the [Commission] wide discretion in selecting its own procedures . . . and must defer to the [Commission] interpretation of its own rules, unless the interpretation is plainly erroneous.'') (citations omitted).

[133] NYPSC Request for Rehearing at 5.

[134] Order No. 888, FERC Stats. & Regs. ¶ 31,036 at 31,783–84 (1996).

[135] NARUC Request for Rehearing at 7 (citing Order No. 888, FERC Stats. & Regs. ¶ 31,036 (1996)).

[136] NRECA Request for Rehearing at 6.

[137] NRECA Request for Rehearing at 6.

several of the seven factors are very similar to components of the core definition and exclusions and to items on the ''Detailed Information to Support an Exception Request'' form. TAPS and ELCON thus contend that NERC's exception process analysis and the Commission's local distribution analysis will likely overlap each other.

100. NYPSC, NARUC and APPA state that the NERC exception process does not explicitly provide for state involvement.[138] NYPSC and NARUC believe that, because the states have a unique interest and jurisdictional role, the exceptions process must allow for direct state participation, including the right to submit comments and contribute to the development of the record prior to any preliminary or final determinations being made.

Commission Determination

101. The Commission denies rehearing on these issues. In the Final Rule, the Commission acted consistent with legal precedent that the question of whether facilities are used in local distribution is a question of fact to be decided by the Commission.[139] The Final Rule stated that the Commission would apply the factors in the Seven Factor Test, plus other factors as the starting point for making local distribution determinations.[140] The Commission, however, did not adopt Order No. 888 for use in this process.

102. We disagree with arguments questioning the suitability of the factors in the Seven Factor Test for use in the reliability context or that some of the factors seem less appropriate to consider when determining whether facilities are used in local distribution. FPA sections 201(b)(1) and 215 both use the legal term ''local distribution.'' As we stated in the Final Rule, the determination whether an element or facility is ''used in local distribution,'' as the phrase is used in the FPA, requires a jurisdictional analysis and use of the factors in the Seven Factor Test, among others, ''comports with relevant legal precedent.'' [141] Therefore, we are not persuaded that the factors in the Seven Factor Test are an unsuitable means to determine whether a facility is used in local distribution. The question of whether all the factors are relevant in each case is one for the Commission to determine in specific circumstances. With regard to NRECA's argument that NERC and the Commission lack reliability jurisdiction over dual use facilities, the Commission will address that issue when relevant to a specific case.

103. We are not persuaded by the argument that the Commission needs to define at this time the additional factors it may use or explain how its criteria will adequately differentiate between local distribution and transmission facilities. The Final Rule stated that local distribution determinations are factual in nature and the Commission will make decisions on a case-by-case basis. We anticipate that applicants will take the seven factors into account and, to the extent other factors are relevant, they are free to raise them as part of their inquiry and the Commission will address them at that time. Further, we find that TAPS' and ELCON's contention that the similarity between the seven factors, the core definition and the Detailed Information Form will cause significant overlap between NERC's analysis of an exception request and the Commission's analysis of a request for a finding that a facility is used in local distribution is premature and speculative.

104. With regard to state involvement in Commission local distribution determinations, the Final Rule only stated the Commission would apply the factors in the Seven Factor Test and did not adopt Order No 888 for use here.[142] The Commission notes that state regulators are not excluded from involvement in a Commission proceeding involving a local distribution determination and will have the opportunity to participate in the local distribution determination process at the Commission. As part of that participation, they may support their position with evidence that a state commission determined that the facilities in question are local distribution facilities.

105. Similarly, with regard to state involvement in the exception process, we deny rehearing. Petitioners essentially repeat their arguments from the NOPR and we are not persuaded that our finding in the Final Rule was unreasonable. In the Final Rule, the Commission found that the exception process ''should be one based on the technical reliability issues of the specific case presented. . . . [A] procedure that encouraged or even invited multi-party filings would unduly complicate the process. . . . '' [143] Nevertheless, to provide transparency and opportunity for participation, NERC's exception process provides that ''(1) detailed notice of any request would be provided to every Registered Entity with reliability oversight obligation for the Element subject to the Request and (2) general information about the request will be publicly posted,'' thereby allowing third parties including state regulators ''adequate opportunity to provide comments regarding the request without formally participating in the process.'' [144]

F. Designation of Bulk Electric System Elements

106. In the Final Rule, the Commission concluded that registered entities must inform the Regional Entity of any self-determination that an element is no longer part of the bulk electric system. We noted that section 501 of NERC's Rules of Procedure provides that each registered entity must notify its Regional Entity of any matters that affect the registered entities' responsibilities with respect to Reliability Standards. Section 501 also requires entities to inform the Regional Entity of any self-determination that an element is no longer part of the bulk electric system.[145] We further stated that this requirement does not involve a justification of why the element is being excluded but rather as one that involves nothing more than notification.[146] The Commission also concluded that it has the authority to designate an element as part of the bulk electric system pursuant to our authority set forth in sections 215(a)(1) and (b)(1) of the FPA.

107. Entities request clarification and/or rehearing on three aspects of these determinations: (1) How must a registered entity inform a Regional Entity that it has excluded an element from the bulk electric system; (2) what process a Regional Entity must use to include a facility if it disagrees with a registered entity's declaration that a specific facility is not part of the bulk

[138] APPA states that the Commission could consider forming a standing federal-state joint board, pursuant to section 209(a) of the FPA, to address local distribution determinations, given that its changes to exclusions E1 and E3 will substantially increase the need for and frequency of such determinations.

[139] *See, e.g., California Pacific Electric Company, LLC,* 133 FERC ¶ 61,018, at n.59 (2010) (''The Supreme Court has determined that whether facilities are used in local distribution is a question of fact to be decided by the Commission'') (citing *FPC* v. *Southern California Edison Co.,* 376 U.S. 205, 210 n.6 (1964)).

[140] Order No. 773, 141 FERC ¶ 61,236 at PP 69, 71.

[141] *See* Order No. 773, 141 FERC ¶ 61,236 at P 69.

[142] Order No. 773, 141 FERC ¶ 61,236 at P 71.

[143] Order No. 773, 141 FERC ¶ 61,236 at P 257.

[144] Order No. 773, 141 FERC ¶ 61,236 at P 257 citing NERC ROP Petition, Att. 9 (''The Development Process and Basis for the ROP Team's Recommended Provisions—How Stakeholder Comments were Considered and Addressed'') at 7.

[145] Order No. 773, 141 FERC ¶ 61,236 at P 317.

[146] Order No. 773, 141 FERC ¶ 61,236 at P 318.

electric system; and (3) if the Commission decides on its own to designate an element as part of the bulk electric system, it should consult state regulatory authorities.

1. Regional Entity Role

108. Snohomish requests clarification, or in the alternative rehearing, with respect to several aspects of the process for removing specific elements from the bulk electric system. Snohomish notes that the Commission specifies that a registered entity may remove specific elements from the bulk electric system by simply notifying its Regional Entity, and Snohomish believes that notifying its Regional Entity by a simple written or electronic notification satisfies the notification requirement. Snohomish also states that the Final Rule does not explain what would occur if the Regional Entity disagrees with the registered entity's determination that an element is not part of the bulk electric system. Snohomish requests clarification that, in the absence of bad faith on the part of the registered entity providing a notification that an element is not a bulk electric system element, that element should not be treated as part of the bulk electric system unless and until a contrary determination is made by NERC. Snohomish states that this clarification will help ensure that registered entities clearly understand their reliability compliance obligations at a facility-by-facility level, and that, if they apply the bulk electric system definition in good faith, they will not be subject to retroactive liability if that good faith determination is later successfully challenged by the Regional Entity and overturned by NERC.

109. Snohomish also requests clarification that, in the event that a Regional Entity disagrees with a registered entity's determination that an element is not part of the bulk electric system, the Regional Entity must use the exception process to include the element. Snohomish asserts that this clarification will ensure that there is a well-understood and consistent procedure for inclusion of elements in the bulk electric system. In the alternative, Snohomish states that the Commission should clarify that the existing appeals process in Appendix 5A of the NERC Rules of Procedure, which Snohomish states ''provides for appeals only from entity registration decisions and from decisions regarding entity certification,'' should govern when the Regional Entity disagrees with a registered entity's designation of an element as not part of the bulk electric system.[147]

Commission Determination

110. The Commission agrees with Snohomish that, in the absence of bad faith, if a registered entity applies the bulk electric system definition and determines that an element no longer qualifies as part of the bulk electric system, upon notifying the appropriate Regional Entity that the element is no longer part of the bulk electric system the element should not be treated as part of the bulk electric system unless NERC makes a contrary determination in the exception process. If the Regional Entity disagrees with the classification of the element and believes the element is necessary for reliable operation, the Regional Entity should initiate an exception request to include the element in the bulk electric system. If NERC agrees with the Regional Entity and determines that the element should be included in the bulk electric system, the registered entity should not be subject to retroactive liability for the time period the element was not included in the bulk electric system.

2. Designation of Facilities

111. APPA argues that, if the Commission decides on its own to designate an element as part of the bulk electric system, it should consult state regulatory authorities in this process and not simply relegate them to notice and opportunity for comment.[148] Additionally, APPA states that ''a full evidentiary hearing, with opportunities for discovery and cross-examination, as opposed to a paper hearing may be required in such circumstances because of the fact-based nature of these issues, and because the Commission would be making precedent-setting policy determinations that could affect many public utilities and registered entities.'' [149] APPA requests that, consistent with the Commission's approval of NERC's implementation plan, the Commission clarify that entities subject to Commission-designated bulk electric system facility determinations will be given an appropriate amount of time to become compliant with reliability standards.

Commission Determination

112. We deny rehearing with respect to the APPA's request that the Commission consult state regulatory authorities when the Commission elects to designate an element as part of the bulk electric system. We are not persuaded by APPA's justification for why the Commission should provide a greater role to state regulators than is already provided to all interested parties through notice and opportunity for comment. As we stated in the Final Rule, we expect that registered entities, Regional Entities, and NERC will proactively identify and include elements in the bulk electric system. However, if no other entity initiates the process to include in the bulk electric system an element necessary for the operation of the interconnected transmission network, the Commission has the authority to do so. If the Commission finds it necessary to initiate this authority, it would make a final determination after providing interested parties notice and opportunity for comment.[150] For the same reasons stated above in connection with a state role in a local distribution determination and the exception process, we are not persuaded by APPA's argument that state regulators need additional process other than that already afforded to all interested parties provided notice and opportunity for comment. Accordingly, we deny APPA's request for rehearing on this matter.

113. In response to APPA's contention that a full evidentiary hearing is necessary when the Commission proposes to designate an element as part of the bulk electric system, the Commission will not require or preclude use of a full evidentiary hearing. The Commission will provide due process as required by the APA which in appropriate instances the Commission can accomplish through a paper hearing.

114. In response to APPA's comments regarding the implementation schedule when the Commission determines an element should be part of the bulk electric system, we agree that an entity will have an appropriate amount of time to become compliant with applicable Reliability Standards.

G. Other Requested Clarifications

1. Meaning of ''Non-Retail Generation''

115. Snohomish requests that the Commission provide clarification concerning the meaning of the term ''non-retail generation'' in exclusion E3. Snohomish requests that the Commission clarify that ''non-retail generation'' includes both customer-owned, behind-the-meter generation that is not resold on the Bulk-Power

[147] Snohomish Request for Clarification, or in the Alternative, Petition for Rehearing at 5 (footnotes omitted).

[148] APPA Request for Rehearing at 29.

[149] *Id.*

[150] Order No. 773, 141 FERC ¶ 61,236 at P 285.

System to wholesale purchasers and generation that a load-serving utility uses solely to provide power to its own customers and does not sell to other wholesale purchasers. Snohomish maintains that this result is consistent with FPA section 201(b)(1), which excludes generation facilities and facilities used for the intrastate sale of electric energy from the Commission's jurisdiction.

Commission Determination

116. We decline to make the requested clarification. In the Final Rule several entities requested clarification of various terms including the term ''non-retail.'' The Commission found that the phrase was sufficiently clear.[151] We reiterate our statement in the Final Rule that entities may pursue further clarification from NERC in an appropriate forum such as NERC's Phase 2 project.

2. Effective Date

117. Snohomish requests that the Commission clarify that the revised definition will become effective for NERC compliance purposes on July 1, 2013, and that the transition period discussed in the Final Rule will extend twenty-four months from that date.

Commission Determination

118. The Commission grants Snohomish's clarification. NERC stated that the revised definition become effective on the first day of the second calendar quarter after receiving applicable regulatory approval, or, in those jurisdictions where no regulatory approval is required, on the first day of the second calendar quarter after its adoption by the NERC Board of Trustees. Order No. 773 was published in the **Federal Register** on January 4, 2013 with the Final Rule becoming effective 60 days thereafter, or March 5, 2013. Thus, the first day of the second calendar quarter after March 5 is July 1, 2013.

H. Requests for Revised Information Collection Burden and Regulatory Flexibility Act Analysis

119. In the Final Rule, the Commission stated that it did not need to reassess the reporting burden estimates and Regulatory Flexibility Act (RFA) certification. NARUC requests that the Commission clarify its RFA analysis in light of its decision to rule on jurisdictional questions and to direct NERC to not permit certain 100 kV and above facilities that are looped with sub-100 kV facilities to qualify for exclusion E1. NARUC maintains that the Commission modified the definition by changing language contained in exclusions E1 and E3, the net effect of which would be to increase the number of entities that might choose to use the exception process. Therefore, according to NARUC, it is likely that the Commission's actions will impose unjustified regulatory burdens and costs.

120. NRECA also states that the public reporting burden and information collection requirement section of the Final Rule did not discuss additional costs associated with the Commission making local distribution determinations or entities having to apply for an exception as a result of the Commission's interpretation of exclusion E1. NRECA also states that the Commission erred by not modifying the RFA certification that the Final Rule will not have a significant economic impact on a substantial number of small entities. NRECA seeks clarification of the Final Rule because it believes that the jurisdiction determination process and the exclusion E1 directive will affect other small entities that were not identified previously, and the Commission must identify affected entities before it can certify the determination. NRECA states that the RFA requires that all effects of a rule on small entities must be considered, not just initial compliance costs or only the costs associated with small entities that identify, for the first time, facilities that are subject to the bulk electric system definition. NRECA requests that the Commission revisit the impact of the Final Rule on small entities, and thereafter clarify and provide greater detail with respect to its RFA certification.

121. Similarly, APPA states that the Commission's modifications to the definition will substantially increase the public reporting burden, necessitating a new analysis. APPA argues that the Commission's changes to exclusions E1 and E3 would substantially increase the number of required studies and exception requests, which necessarily affect the associated paperwork burden estimates. Yet, according to APPA, the Commission has failed to reassess its burden calculations and adjust its estimates which will result in the imposition of unjustified regulatory burdens and costs.

122. APPA also states that the Commission must reassess its RFA analysis to account for the Commission's changes to exclusions E1 and E3. According to APPA, many of the entities filing these requests might not currently be on the NERC Compliance Registry or might only be listed as distribution providers or load serving entities. In addition, APPA argues that the Commission estimate of 418 small entities is too low. APPA states that it alone has approximately 330 members on the NERC registry, about 290 of which fall within the definition of a small utility under the relevant Small Business Administration definition.

Commission Determination

123. The Commission grants rehearing in part and denies rehearing in part. The Commission grants rehearing on the need to reassess the burden estimates relative to the Final Rule modifications regarding exclusions E1 and E3. In revising the information cost estimates, the Commission also included additional costs associated with the local distribution determinations. However, because the Commission grants rehearing on implementing exclusions E1 and E3 to instead direct NERC to modify the definition pursuant to FPA section 215(d)(5) in the Phase 2 process, the Commission will address estimates in connection with that change after NERC submits its proposal.

1. Information Collection Statement

124. In the Final Rule, the Commission estimated the reporting burden for entities to apply the revised bulk electric system definition to all elements to determine if those elements are included in the bulk electric system pursuant to the revised definition. The Commission also estimated the burden for entities' use of the exception process as well as the costs for Regional Entities and NERC to process exception requests. In addition, the Commission estimated the public reporting burden for entities to identify new elements under the revised bulk electric system definition.

125. While the Commission is providing revised information collection estimates, we disagree with NARUC and APPA that the Commission's modifications to NERC's proposal will substantially increase the public reporting burden or will impose unjustified regulatory burdens and costs. None of the petitioners provide data to quantify or substantiate their claims. With regard to the alleged increase in case-specific exceptions applications, APPA cites to one large entity that claimed that it would have to file dozens of exception requests to have looped configurations excluded. However, we are not persuaded by APPA and others that the Commission's discussion of exclusion E1 (radial systems) pertaining to sub-100 kV

[151] Order No. 773, 141 FERC ¶ 61,236 at P 215.

looped systems with multiple connections at 100 kV and above and the corresponding modification to exclusion E3 will result in a substantial increase in exception applications. Rather, as explained in the Final Rule, as well as this order on rehearing, the Commission directed NERC to develop a modification to exclusion E3 (local networks) that would eliminate the 100 kV ''floor'' to be eligible for the exclusion. As a result, by design, we anticipate that many entities with sub-100 kV looped configurations that are not eligible for exclusion E1 may avoid submitting an exception request and be eligible for the E3 exclusion as revised by the Final Rule. As explained elsewhere, an entity may apply the E3 exclusion without having to submit an application to NERC for a case-specific ruling.[152]

126. With regard to applications submitted to the Commission for local distribution determinations, we expect the number of local distribution determinations to be small.[153] Petitioners have not provided information in their rehearing requests that persuade us to change our expectation. Thus, the Commission estimates that there will be approximately eight local distribution determinations per year.

127. Although we believe that the burden estimates set forth in the Final Rule are generally sound, we nonetheless revise certain aspects to provide more accurate estimates. To account for the Final Rule directive for exclusions E1 and E3, the Commission has increased by five the number of engineering hours needed for ''System Review and List Creation'' for transmission owners. The Commission increased the number of engineering hours by three for the same review by distribution providers. System Review and List Creation corresponds to step 1 of NERC's proposed transition plan, which requires each U.S. asset owner to apply the revised bulk electric system definition to all elements to determine if those elements are included in the bulk electric system pursuant to the revised definition.[154] The Commission added these hours to recognize the additional time needed for an entity that has a looped configuration operating below 100 kV with multiple connections at 100 kV and above that is not eligible for exclusion E1 to analyze whether the configuration is eligible for exclusion E3.

128. In addition, the Commission is increasing the estimate of the number of exception requests in the first two years by approximately ten percent, from 260 per year to 285 requests per year. The original estimate of 260 requests per year considered all requests for exceptions, undifferentiated by whether the applicant's request is based on exclusions E1 and E3 or any other part of the definition. Here, we estimate an additional 25 exception requests that may be submitted by entities with looped configurations operating below 100 kV that, based on the Final Rule, do not qualify for the E1 radial system exclusion. However, as discussed above, we are not persuaded that a greater increase of exception requests is warranted because the directive that NERC modify the local network E3 exclusion by eliminating the 100 kV floor should allow many, if not most, of the entities that operate systems with a sub-100 kV loop to exclude those 100 kV and above facilities that connect them to the interconnected transmission network (without an exception request) based on the E3 exclusion (noting that the elements operating below 100 kV are already excluded from the bulk electric system by the core definition).

129. The revised estimates are shown as follows:

Requirement	Number and type of entity[155] (1)	Number of responses per entity (2)	Average number of hours per response (3)	Total burden hours (1)*(2)*(3)
System Review and List Creation.	333 Transmission Owners	1 response	85 (engineer hours)	28,305 Yr 1.
	843 Generator Owners	1 response	16 (engineer hours)	13,488 Yr 1.
	554 Distribution Providers	1 response	27 (engineer hours)	14,958 Yr 1.
Exception Requests[156]	1,730 total Transmission Owners, Generator Owners and Distribution Providers.	285 responses each in Yrs 1 and 2 (total for all entities, i.e., not per entity).	94 (60 engineer hrs, 32 record keeping hrs, 2 legal hrs).	26,790 hrs in Yrs 1 and 2.
		20 responses in Yr 3 and ongoing (total for all entities, i.e., not per entity).	94 (60 engineer hrs, 32 record keeping hrs, 2 legal hrs).	736 hrs in Yr 3 and ongoing.
Local Distribution Determinations[157].	8 entities	1 response	92 (60 engineer hrs, 8 record keeping hrs, 24 legal hrs).	736 hrs.

[152] *See supra* P 42.

[153] *See* Order No. 773, 141 FERC ¶ 61,236 at P 70.

[154] *See* NERC BES Petition at 38.

[155] The ''entities'' listed in this table are describing a role an entity is registered for in the NERC registry. For example, a single entity may be registered as a transmission owner and generator owner. The total number of entities applicable to this rule is 1,522, based on the NERC registry. The total number of estimated roles is 1,730.

[156] From the total 1,730 estimated roles, we estimate an average of 285 requests per year in the first two years. *See* Order No. 773 at n. 225. Therefore, the estimated total number of hours per year for years 1 and 2, using an average of 285 requests per year, is 26,790 hours. We estimate 20 requests per year in year 3 and ongoing.

[157] The Commission estimates 92 hours for a local distribution request comprised of 60 engineer hours, 8 record keeping hours and 24 legal hours. For the local distribution burden category, the loaded (salary plus benefits) costs are: $60/hour for an engineer; $27/hour for recordkeeping; and $106/hour for legal. The breakdown of cost by item and year follows: (sum of hourly expense per request * number of local distribution determinations) = ((60 hrs * $60/hr) + (8 hrs * $27/hr) + (24 hrs * $106/hr)) * 8 requests) = $50,880. Hourly costs are loaded (wage plus benefits) and are based on Commission staff study and industry data from the Bureau of Labor Statistics.

Costs to Comply:

- Year 1: $13,841,400 ($367,400 increase from the initial estimate)
- Year 2: $10,436,340 ($167,780 increase from the initial estimate)
- Year 3 and ongoing: $4,310,800 ($50,704 increase from the initial estimate) [158]

For the burden categories above, the loaded (salary plus benefits) costs are: $60/hour for an engineer; $27/hour for recordkeeping; and $106/hour for legal. The revised breakdown of cost by item and year follows:

- System Review and List Creation (year 1 only): (28,305 hrs + 13,488 hrs + 14,958 hrs) = 56,751 hrs * 60/hr = $3,405,060.
- Exception Requests (years 1 and 2): (sum of hourly expense per request * number of exception requests) = ((60 hrs * $60/hr) + (32 hrs * $27/hr) + (2hrs * $106/hr)) * 285 requests) = $1,332,660.
- Local Distribution (each year): (sum of hourly expense per request * number of exception requests) = ((60 hrs * $60/hr) + (8 hrs * $27/hr) + (24 hrs * $106/hr)) * 8 requests) = $50,880.

Title: FERC–725–J ''Definition of the Bulk Electric System''

Action: Proposed Collection of Information

OMB Control No: 1902–0259

Respondents: Business or other for profit, and not for profit institutions.

Frequency of Responses: On Occasion

Necessity of the Information: The proposed revision to NERC's definition of the term bulk electric system, if adopted, would implement the Congressional mandate of the Energy Policy Act of 2005 to develop mandatory and enforceable Reliability Standards to better ensure the reliability of the nation's Bulk-Power System. Specifically, the proposal would ensure that certain facilities needed for the operation of the nation's bulk electric system are subject to mandatory and enforceable Reliability Standards.[159]

Internal review: The Commission has reviewed the proposed definition and has assured itself, by means of its internal review, that there is specific, objective support for the burden estimate associated with the information requirements.

130. Interested persons may obtain information on the reporting requirements by contacting the Federal Energy Regulatory Commission, Office of the Executive Director, 888 First Street NE., Washington, DC 20426 [Attention: Ellen Brown, email: *DataClearance@ferc.gov*, phone: (202) 502–8663, fax: (202) 273–0873].

131. For submitting comments concerning the collection of information and the associated burden estimate, please send your comments to the Office of Management and Budget, Office of Information and Regulatory Affairs, Washington, DC 20503 [Attention: Desk Officer for the Federal Energy Regulatory Commission, phone: (202) 395–4718, fax: (202) 395–7285]. For security reasons, comments to OMB should be submitted by email to: *oira_submission@omb.eop.gov*. Comments submitted to OMB should include Docket Number RM12–6 and OMB Control Number 1902–0259.

2. Regulatory Flexibility Analysis

132. The Commission grants rehearing in part, and denies rehearing in part, with regard to the impact of the Final Rule on small entities' applying for local distribution determinations at the Commission and the Final Rule directive regarding implementation of exclusions E1 and E3 for looped configurations. The Commission provides revised estimates below.

133. In the NOPR, the Commission estimated that approximately 418 of the 1,730 registered transmission owners, generator owners and distribution service providers may fall within the definition of small entities.[160] The Commission estimated that, of the 418 small entities affected, 50 small entities within the NPCC region would have to comply with the rule. The Commission assumed that the rule would affect more small entities in the NPCC Region than those outside NPCC because there are more elements in NPCC that would be added to the bulk electric system based on the new definition than elsewhere. The Commission estimated the first year effect on small entities within the NPCC region to be $39,414.[161] The Commission based this figure on information collection costs plus additional costs for compliance. The Commission estimated the average annual effect per small entity outside of NPCC will be less than for the entities within NPCC. The Commission concluded that there would not be a significant economic impact for small entities within or outside of NPCC because it should not represent a significant percentage of the operating budget. In Order No. 773, the Commission affirmed its analysis and certified that the Final Rule will not have a significant impact on a substantial number of small entities.[162]

134. While we affirm our certification that the Final Rule will not have a significant impact on a substantial number of small entities, we grant rehearing in part to adjust our estimates on the impact of the Final Rule on small entities. In particular, we adjust our initial estimate to recognize the approximately $6,360 cost incurred by a small entity that petitions the Commission for a local distribution determination. As stated above, the Commission estimates eight local distribution requests per year. The Commission does not believe that small entities will account for all local distribution requests, but even if they do, this estimate will not have a significant economic impact on a substantial number of small entities.

135. We recognize that an entity may have some facilities that do not qualify for exclusions E1 or E3 as revised by the Final Rule and may choose to use the exception process. As stated above, the Commission estimates that the total number of entities with looped configurations that do not qualify for exclusions E1 or E3 who choose to use the exception process to be approximately 25, based on an approximately ten percent increase in the estimated number of exception requests (i.e., an estimated 260 requests revised to 285 requests) submitted during the first year after implementation. Of those, the Commission estimates that ten of the entities could be small entities, with the effect on those small entities to be $4,676 per entity. The Commission bases this figure on the result of the exception request calculation total above, $1,332,660, divided by the number of total estimated exception requests, 285, resulting in the cost per exception request equal to $4,676. We do not assume additional costs of compliance for these ten small entities requesting exceptions because looped systems connected at multiple connections of 100 kV and above are already part of the bulk electric system. If the elements remain in the bulk electric system as a result of the exception process, they will not be newly identified elements and thus the compliance costs associated with these elements are already accounted for in

[158] *See* NOPR, 139 FERC ¶ 61,247 at P 135 for the initial estimates. In the summary costs for years 1–3 displayed in the NOPR and final rule, due to a arithmetic error, the Years 1–3 cost estimates should have been $13,474,000, $10,268,560 and $4,259,920, respectively.

[159] For more information regarding the necessity of the information collected, disclosed or retained, *see Revisions to Electric Reliability Organization Definition of Bulk Electric System and Rules of Procedure,* Order No. 773, 141 FERC ¶ 61,236 (2012).

[160] NOPR, 139 FERC ¶ 61,237 at P 138.

[161] NOPR, 139 FERC ¶ 61,237 at P 139.

[162] Order No. 773, 141 FERC ¶ 61,236 at P 338.

other rulings approving Reliability Standards.[163]

136. Based on the above, as many as 18 small entities may experience an economic impact upwards of approximately $50,000 per year.[164] The Commission does not consider 18 out of 418 small entities (4.3%) to be a substantial number of small entities. Accordingly, the Commission certifies that the Final Rule will not have a significant economic impact on a substantial number of small entities.

137. APPA argues that their members' burdens will change by virtue of being included on the NERC Compliance Registry. We disagree with APPA on this issue. First, it is important to understand that NERC registers entities, not facilities, in the NERC Compliance Registry. We do not expect that NERC's revised BES definition, as well as our determinations in the Final Rule and on rehearing, will have Compliance Registry implications for a significant number of entities. As we have indicated consistently throughout this proceeding, small entities in the NPCC region are most likely to be substantively impacted by the Final Rule, and we have previously recognized the costs of compliance for that sub-group of small entities. APPA has not provided any information to persuade us that NERC will register a significant number of small entities as a result of the Final Rule.

138. APPA also argues that the Commission's estimate that a total of 418 small entities may be affected by the Final Rule is too low and that the Commission did not justify this estimate. We disagree with APPA on this matter. The Commission justified the estimate in the NOPR stating that we started with the Order No. 693 estimate that *all* the Reliability Standards approved in Order No. 693 would apply to approximately 682 small entities.[165] The Commission concluded that the bulk electric system rulemaking would affect a smaller subset of the categories of registered entities and thus our estimate was lower in this proceeding than cited in Order 693.[166] Therefore, we deny rehearing on this issue.

[163] *See, e.g.,* Order No 693, FERC Stats, & Regs. ¶31,242 at PP 1899–1907.

[164] This is based on a conservative assumption that the eight local distribution determination requests and the ten additional entities to use the exception process all are part of the NPCC region. Under this assumption, the total estimated annual cost per entity is $50,450 ($39,414 + $6,360 + $4,676).

[165] NOPR, 139 FERC ¶61,247 at P 139 n.156 (citing Order No 693, FERC Stats, & Regs. ¶31,242 at P 1940).

[166] *Id.*

III. Document Availability

139. In addition to publishing the full text of this document in the **Federal Register,** the Commission provides all interested persons an opportunity to view and/or print the contents of this document via the Internet through FERC's Home Page (*http://www.ferc.gov*) and in FERC's Public Reference Room during normal business hours (8:30 a.m. to 5:00 p.m. Eastern time) at 888 First Street NE., Room 2A, Washington, DC 20426.

140. From FERC's Home Page on the Internet, this information is available on eLibrary. The full text of this document is available on eLibrary in PDF and Microsoft Word format for viewing, printing, and/or downloading. To access this document in eLibrary, type the docket number excluding the last three digits of this document in the docket number field.

141. User assistance is available for eLibrary and the FERC's Web site during normal business hours from FERC Online Support at (202) 502–6652 (toll free at 1–866–208–3676) or email at *ferconlinesupport@ferc.gov,* or the Public Reference Room at (202) 502–8371, TTY (202) 502–8659. Email the Public Reference Room at *public.referenceroom@ferc.gov.*

By the Commission.

Kimberly D. Bose,

Secretary.

Note: Attachment A will not appear in the *Code of Federal Regulations.*

ATTACHMENT A

Definition of Bulk Electric System

Unless modified by the lists shown below, all Transmission Elements operated at 100 kV or higher and Real Power and Reactive Power resources connected at 100 kV or higher. This does not include facilities used in the local distribution of electric energy

Inclusions:

I1—Transformers with the primary terminal and at least one secondary terminal operated at 100 kV or higher unless excluded under Exclusion E1 or E3.

I2—Generating resource(s) with gross individual nameplate rating greater than 20 MVA or gross plant/facility aggregate nameplate rating greater than 75 MVA including the generator terminals through the high-side of the step-up transformer(s) connected at a voltage of 100 kV or above.

I3—Blackstart Resources identified in the Transmission Operator's restoration plan.

I4—Dispersed power producing resources with aggregate capacity greater than 75 MVA (gross aggregate nameplate rating) utilizing a system designed primarily for aggregating capacity, connected at a common point at a voltage of 100 kV or above.

I5—Static or dynamic devices (excluding generators) dedicated to supplying or absorbing Reactive Power that are connected at 100 kV or higher, or through a dedicated transformer with a high-side voltage of 100 kV or higher, or through a transformer that is designated in Inclusion I1.

Exclusions:

E1—Radial systems: A group of contiguous transmission Elements that emanates from a single point of connection of 100 kV or higher and:

(a) Only serves Load. Or,

(b) Only includes generation resources, not identified in Inclusion I3, with an aggregate capacity less than or equal to 75 MVA (gross nameplate rating). Or,

(c) Where the radial system serves Load and includes generation resources, not identified in Inclusion I3, with an aggregate capacity of non-retail generation less than or equal to 75 MVA (gross nameplate rating).

Note—A normally open switching device between radial systems, as depicted on prints or one-line diagrams for example, does not affect this exclusion.

E2—A generating unit or multiple generating units on the customer's side of the retail meter that serve all or part of the retail Load with electric energy if: (i) the net capacity provided to the BES does not exceed 75 MVA, and (ii) standby, back-up, and maintenance power services are provided to the generating unit or multiple generating units or to the retail Load by a Balancing Authority, or provided pursuant to a binding obligation with a Generator Owner or Generator Operator, or under terms approved by the applicable regulatory authority.

E3—Local networks (LN): A group of contiguous transmission Elements operated at or above 100 kV but less than 300 kV that distribute power to Load rather than transfer bulk-power across the interconnected system. LN's emanate from multiple points of connection at 100 kV or higher to improve the level of service to retail customer Load and not to accommodate bulk-power transfer across the interconnected system. The LN is characterized by all of the following:

(a) Limits on connected generation: The LN and its underlying Elements do not include generation resources identified in Inclusion I3 and do not have an aggregate capacity of non-retail generation greater than 75 MVA (gross nameplate rating);

(b) Power flows only into the LN and the LN does not transfer energy originating outside the LN for delivery through the LN; and

(c) Not part of a Flowgate or transfer path: The LN does not contain a monitored Facility of a permanent Flowgate in the Eastern Interconnection, a major transfer path within the Western Interconnection, or a comparable monitored Facility in the ERCOT or Quebec Interconnections, and is not a monitored Facility included in an Interconnection Reliability Operating Limit (IROL).

E4—Reactive Power devices owned and operated by the retail customer solely for its own use.

Note—Elements may be included or excluded on a case-by-case basis through the Rules of Procedure exception process.

[FR Doc. 2013–11130 Filed 5–16–13; 8:45 am]

BILLING CODE 6717–01–P

Reader Aids

Federal Register

Vol. 78, No. 96

Friday, May 17, 2013

CUSTOMER SERVICE AND INFORMATION

Federal Register/Code of Federal Regulations	
General Information, indexes and other finding aids	**202–741–6000**
Laws	**741–6000**
Presidential Documents	
Executive orders and proclamations	**741–6000**
The United States Government Manual	**741–6000**
Other Services	
Electronic and on-line services (voice)	**741–6020**
Privacy Act Compilation	**741–6064**
Public Laws Update Service (numbers, dates, etc.)	**741–6043**
TTY for the deaf-and-hard-of-hearing	**741–6086**

ELECTRONIC RESEARCH

World Wide Web

Full text of the daily Federal Register, CFR and other publications is located at: **www.fdsys.gov.**

Federal Register information and research tools, including Public Inspection List, indexes, and links to GPO Access are located at: **www.ofr.gov.**

E-mail

FEDREGTOC-L (Federal Register Table of Contents LISTSERV) is an open e-mail service that provides subscribers with a digital form of the Federal Register Table of Contents. The digital form of the Federal Register Table of Contents includes HTML and PDF links to the full text of each document.

To join or leave, go to **http://listserv.access.gpo.gov** and select *Online mailing list archives, FEDREGTOC-L, Join or leave the list (or change settings);* then follow the instructions.

PENS (Public Law Electronic Notification Service) is an e-mail service that notifies subscribers of recently enacted laws.

To subscribe, go to **http://listserv.gsa.gov/archives/publaws-l.html** and select *Join or leave the list (or change settings);* then follow the instructions.

FEDREGTOC-L and **PENS** are mailing lists only. We cannot respond to specific inquiries.

Reference questions. Send questions and comments about the Federal Register system to: **fedreg.info@nara.gov**

The Federal Register staff cannot interpret specific documents or regulations.

Reminders. Effective January 1, 2009, the Reminders, including Rules Going Into Effect and Comments Due Next Week, no longer appear in the Reader Aids section of the Federal Register. This information can be found online at **http://www.regulations.gov.**

CFR Checklist. Effective January 1, 2009, the CFR Checklist no longer appears in the Federal Register. This information can be found online at **http://bookstore.gpo.gov/.**

FEDERAL REGISTER PAGES AND DATE, MAY

25361–25564 1
25565–25786 2
25787–26230 3
26231–26484 6
26485–26700 7
26701–27000 8
27001–27302 9
27303–27852 10
27853–28110 13
28111–28464 14
28465–28718 15
28719–29018 16
29019–29232 17

CFR PARTS AFFECTED DURING MAY

At the end of each month the Office of the Federal Register publishes separately a List of CFR Sections Affected (LSA), which lists parts and sections affected by documents published since the revision date of each title.

3 CFR

Proclamations:
8964 25563
8965 26213
8966 26215
8967 26217
8968 26219
8969 26221
8970 26223
8971 26225
8972 26227
8973 26229
8974 26483
8975 26997
8976 28464
8977 28709
8978 28711
8979 28713
8980 28715

Executive Orders:
13642 28111

Administrative Orders:
Memorandums:
Memorandum of May 10, 2013 28717
Notices:
Notice of May 2, 2013 26231
Notice of May 2, 2013 (C1-2013-10817) 26999
Notice of May 7, 2013 27301
Notice of May 13, 2013 28465

6 CFR

Proposed Rules:
Ch. X 28532
5 28761

7 CFR

301 .....27853, 27855, 27856
319 25565
810 27857
905 28115
955 28118
966 28120
1280 28121
1739 25787
3575 26485

Proposed Rules:
205 25879
305 27864
319 .....25620, 25623, 26540
925 28147
929 28149

8 CFR

1292 28124

9 CFR

11 27001
71 26486

10 CFR

719 25795

Proposed Rules:
2 25886
429 27866
430 .....25626, 26544, 26711
431 25627
71 .....28988, 29016

11 CFR

Proposed Rules:
Ch. I 25635

12 CFR

615 26701
1026 25818
1075 26489
1230 28442
1770 28442

Proposed Rules:
652 26711
1024 25638
1026 .....25638, 27308
1075 26545
1231 28452

13 CFR

127 26504

14 CFR

23 28719
25 .....25840, 25846
39 .....25361, 25363, 25365, 25367, 25369, 25372, 25374, 25377, 25380, 26233, 26241, 27001, 27005, 27010, 27015, 27020, 28125, 28128, 28130, 28723, 28725, 28727, 28729
71 .....25382, 25383, 25384, 26243, 27025, 27029, 27031, 28132
97 .....25384, 25386, 28133, 28135

Proposed Rules:
25 26280
39 .....25662, 25664, 25666, 25898, 25902, 25905, 26286, 26556, 26712, 26715, 26716, 26720, 27310, 27314, 27315, 27318, 27867, 27869, 28152, 28156, 28159, 28161, 28540, 28764, 28767
71 .....25402, 25403, 25404, 25406, 26557, 26558, 27872

15 CFR

902 28523

16 CFR

Proposed Rules:
23 26289

435 25908
1110 28080

18 CFR

35 28732
40 29210
Proposed Rules:
40 27113

21 CFR

510 27859
558 27859
579 27303
880 28733
1308 ....26701, 28735
Proposed Rules:
15 27113
173 28163
312 ....27115, 27116
878 27117

22 CFR

62 28137
Proposed Rules:
62 25669

24 CFR

Proposed Rules:
579 26559

25 CFR

162 27859

26 CFR

1 28467
301 ....26244, 26506
602 26244
Proposed Rules:
1 ....25909, 27873

27 CFR

5 28739

29 CFR

4022 28490
Proposed Rules:
2520 26727

32 CFR

323 25853
633 29019
706 28491
733 26507
751 26507
Proposed Rules:
776 25538

33 CFR

100 ....25572, 25574, 26246, 27032, 28482
117 ....26248, 26249, 26508, 28139, 29020
165 ....25577, 26508, 27032, 27033, 27035, 27304, 28495, 28742, 28743, 29020, 29022, 29023, 29025
Proposed Rules:
5 27321
100 ....28164, 28167
101 27335
104 27335
105 27335
106 27335
117 27336
162 25677
165 ....25407, 25410, 26293, 27877, 28170, 29086, 29089, 29091, 29094
334 ....27124, 27126

34 CFR

Ch. III 26509, 26513, 27036, 27038
685 28954
Proposed Rules:
Ch. II 27129
Ch. III 26560, 28543
Ch. VI 27880

36 CFR

Proposed Rules:
7 27132

37 CFR

Proposed Rules:
201 27137
385 28770

38 CFR

17 ....26250, 28140
Proposed Rules:
3 28546
17 27153
74 27882

39 CFR

3002 27044
Proposed Rules:
111 25677

40 CFR

9 ....25388, 27048
52 ....25858, 26251, 26255, 26258, 27058, 27062, 27065, 27071, 28143, 28497, 28501, 28503, 28744, 28747, 29027, 29032
60 28052
62 28052
81 27071
82 29034
98 25392
158 26936
161 26936
180 ....25396, 28507, 29041, 29049
271 25779
721 ....25388, 27048
799 27860
Proposed Rules:
52 ....26300, 26301, 26563, 26568, 27160, 27161, 27165, 27168, 27883, 27888, 27891, 27898, 28173, 28547, 28550, 28551, 28773, 28775, 28776, 29096
63 26739
81 27168
271 25671
745 27906

41 CFR

Proposed Rules:
102-92 27908

42 CFR

1007 29055
Proposed Rules:
412 ....26880, 27486
413 26438
418 27823
424 26438
447 28551
482 27486
485 27486
489 27486

43 CFR

10 27078

44 CFR

64 ....25582, 25585, 25589
Proposed Rules:
67 ....28779, 28780

45 CFR

60 25858
61 25858
800 25591
Proposed Rules:
612 28173
1172 28569
1614 ....27339, 27341

46 CFR

Proposed Rules:
107 27913
108 27913
109 27913

47 CFR

2 29062
25 29062
51 26261
54 ....26261, 26269, 26705, 29063
69 26261
73 ....25591, 25861, 27306, 27307
76 27307
90 28749
Proposed Rules:
0 25916
2 25916
15 25916
54 29097
64 26572
68 25916
73 ....26739, 27342

48 CFR

Ch. II 28756
204 28756
209 28756
217 28756
252 ....26518, 28756
931 25795
952 25795
970 25795
Proposed Rules:
1 26573
28 26573
52 26573
202 28780
212 28785
215 ....28785, 28790
225 ....28785, 28793
231 28780
244 28780
246 28780
252 ....28780, 28785

49 CFR

Proposed Rules:
Ch. I 27169
383 ....26575, 27343
384 27343
390 26575
391 27343
1002 29071
1011 29071
1108 29071
1109 29071
1111 29071
1115 29071

50 CFR

17 28513
300 26708
622 ....25861, 27084, 28146
635 ....26709, 28758
648 ....25591, 25862, 26118, 26172, 26523, 27088
660 ....25865, 26277, 26526
679 ....25878, 27863
680 28523
Proposed Rules:
17 ....25679, 26302, 26308, 26581, 27171
21 ....27927, 27930
217 26586
223 ....29098, 29100
224 ....29098, 29100
600 25685
622 ....26607, 26740
648 28794

LIST OF PUBLIC LAWS

This is a continuing list of public bills from the current session of Congress which have become Federal laws. It may be used in conjunction with "P L U S" (Public Laws Update Service) on 202–741–6043. This list is also available online at *http://www.archives.gov/federal-register/laws*.

The text of laws is not published in the **Federal Register** but may be ordered in "slip law" (individual pamphlet) form from the Superintendent of Documents, U.S. Government Printing Office, Washington, DC 20402 (phone, 202–512–1808). The text will also be made available on the Internet from GPO's Federal Digital System (FDsys) at *http://www.gpo.gov/fdsys*. Some laws may not yet be available.

H.R. 1246/P.L. 113–8
District of Columbia Chief Financial Officer Vacancy Act (May 1, 2013; 127 Stat. 441)

H.R. 1765/P.L. 113–9
Reducing Flight Delays Act of 2013 (May 1, 2013; 127 Stat. 443)

Last List April 17, 2013

Public Laws Electronic Notification Service (PENS)

PENS is a free electronic mail notification service of newly enacted public laws. To subscribe, go to *http://listserv.gsa.gov/archives/publaws-l.html*

Note: This service is strictly for E-mail notification of new laws. The text of laws is not available through this service. **PENS** cannot respond to specific inquiries sent to this address.