AUTHENTICATED
U.S. GOVERNMENT
INFORMATION
GPO

FEDERAL REGISTER

Vol. 78 Tuesday,
No. 98 May 21, 2013

Part II

Environmental Protection Agency

40 CFR Parts 79, 80, 85 et al.
Control of Air Pollution From Motor Vehicles: Tier 3 Motor Vehicle Emission and Fuel Standards; Proposed Rule

ENVIRONMENTAL PROTECTION AGENCY

40 CFR Parts 79, 80, 85, 86, 600, 1036, 1037, 1065, and 1066

[EPA–HQ–OAR–2011–0135; FRL–9785–8]

RIN 2060–AQ86

Control of Air Pollution From Motor Vehicles: Tier 3 Motor Vehicle Emission and Fuel Standards

AGENCY: Environmental Protection Agency (EPA).

ACTION: Proposed Rule.

SUMMARY: This action would establish more stringent vehicle emissions standards and reduce the sulfur content of gasoline beginning in 2017, as part of a systems approach to addressing the impacts of motor vehicles and fuels on air quality and public health. The proposed gasoline sulfur standard would make emission control systems more effective for both existing and new vehicles, and would enable more stringent vehicle emissions standards. The proposed vehicle standards would reduce both tailpipe and evaporative emissions from passenger cars, light-duty trucks, medium-duty passenger vehicles, and some heavy-duty vehicles. This would result in significant reductions in pollutants such as ozone, particulate matter, and air toxics across the country and help state and local agencies in their efforts to attain and maintain health-based National Ambient Air Quality Standards. Motor vehicles are an important source of exposure to air pollution both regionally and near roads. These proposed vehicle standards are intended to harmonize with California's Low Emission Vehicle program, thus creating a federal vehicle emissions program that would allow automakers to sell the same vehicles in all 50 states. The proposed vehicle standards would be implemented over the same timeframe as the greenhouse gas/fuel efficiency standards for light-duty vehicles, as part of a comprehensive approach toward regulating emissions from motor vehicles.

DATES: *Comments.* Comments must be received on or before June 13, 2013.

Public Hearing: The public hearings were held on April 24, 2013 in Philadelphia, PA and April 29, 2013 in Chicago, IL.

ADDRESSES: Submit your comments, identified by Docket ID No. EPA–HQ–OAR–2011–0135, by one of the following methods:

- *www.regulations.gov:* Follow the on-line instructions for submitting comments.
- *Email: A-and-R-Docket@epamail.epa.gov.*
- *Mail:* Air and Radiation Docket and Information Center, Environmental Protection Agency, Mailcode: 2822T, 1200 Pennsylvania Ave. NW., Washington, DC 20460. In addition, please mail a copy of your comments on the information collection provisions to the Office of Information and Regulatory Affairs, Office of Management and Budget (OMB), Attn: Desk Officer for EPA, 725 17th St. NW., Washington, DC 20503.
- *Hand Delivery:* EPA Docket Center, EPA West Building, Room 3334, 1301 Constitution Ave. NW., Washington, DC 20460. Such deliveries are only accepted during the Docket's normal hours of operation, and special arrangements should be made for deliveries of boxed information.

Instructions: Direct your comments to Docket ID No. EPA–HQ–OAR–2011–0135. EPA's policy is that all comments received will be included in the public docket without change and may be made available online at *www.regulations.gov*, including any personal information provided, unless the comment includes information claimed to be Confidential Business Information (CBI) or other information whose disclosure is restricted by statute. Do not submit information that you consider to be CBI or otherwise protected through *www.regulations.gov* or email. The *www.regulations.gov* Web site is an ''anonymous access'' system, which means EPA will not know your identity or contact information unless you provide it in the body of your comment. If you send an email comment directly to EPA without going through *www.regulations.gov* your email address will be automatically captured and included as part of the comment that is placed in the public docket and made available on the Internet. If you submit an electronic comment, EPA recommends that you include your name and other contact information in the body of your comment and with any disk or CD–ROM you submit. If EPA cannot read your comment due to technical difficulties and cannot contact you for clarification, EPA may not be able to consider your comment. Electronic files should avoid the use of special characters, any form of encryption, and be free of any defects or viruses. For additional information about EPA's public docket visit the EPA Docket Center homepage at *http://www.epa.gov/epahome/dockets.htm.* For additional instructions on submitting comments, go to Section I.B of the **SUPPLEMENTARY INFORMATION** section of this document.

Docket: All documents in the docket are listed in the *www.regulations.gov* index. Although listed in the index, some information is not publicly available, e.g., CBI or other information whose disclosure is restricted by statute. Certain other material, such as copyrighted material, will be publicly available only in hard copy. Publicly available docket materials are available either electronically in *www.regulations.gov* or in hard copy at the Air and Radiation Docket and Information Center, EPA/DC, EPA West, Room 3334, 1301 Constitution Ave. NW., Washington, DC. The Public Reading Room is open from 8:30 a.m. to 4:30 p.m., Monday through Friday, excluding legal holidays. The telephone number for the Public Reading Room is (202) 566–1744, and the telephone number for the Air Docket is (202) 566–1742.

FOR FURTHER INFORMATION CONTACT: JoNell Iffland, Office of Transportation and Air Quality, Assessment and Standards Division (ASD), Environmental Protection Agency, 2000 Traverwood Drive, Ann Arbor, MI 48105; Telephone number: (734) 214–4454; Fax number: (734) 214–4816; Email address: *iffland.jonell@epa.gov.*

SUPPLEMENTARY INFORMATION:

I. General Information

A. Does this action apply to me?

Entities potentially affected by this proposed rule include gasoline refiners and importers, ethanol producers, gasoline additive manufacturers, transmix processors, terminals and fuel distributors, light-duty vehicle manufacturers, independent commercial importers, alternative fuel converters, and manufacturers and converters of vehicles between 8,500 and 14,000 lbs gross vehicle weight rating (GVWR).

Potentially regulated categories include:

Category	NAICS [a] Code	SIC [b] Code	Examples of potentially affected entities
Industry	324110	2911	Petroleum refineries (including importers).
Industry	325110	2869	Butane manufacturers.

Category	NAICS [a] Code	SIC [b] Code	Examples of potentially affected entities
Industry	325193	2869	Ethyl alcohol manufacturing.
Industry	211112	1321	Natural gas liquids extraction and fractionation.
Industry	325199	2869	Other basic organic chemical manufacturing.
Industry	486910	4613	Natural gas liquids pipelines, refined petroleum products pipelines.
Industry	424690	5169	Chemical and allied products merchant wholesalers.
Industry	325199	2869	Manufacturers of gasoline additives.
Industry	424710	5171	Petroleum bulk stations and terminals. E51–83 manufacturers.
Industry	493190	4226	Other warehousing and storage-bulk petroleum storage.
Industry	336111, 336112	3711	Light-duty vehicle and light-duty truck manufacturers.
Industry	811111, 811112, 811198	7538, 7533, 7534	Independent commercial importers.
Industry	335312, 336312, 336322, 336399, 811198	3621, 3714, 3519, 3599, 7534	Alternative fuel converters.
Industry	333618, 336120, 336211, 336312	3699, 3711, 3713, 3714	On-highway heavy-duty engine & vehicle (>8,500 lbs GVWR) manufacturers.

[a] North American Industry Classification System (NAICS).
[b] Standard Industrial Classification (SIC).

This table is not intended to be exhaustive, but rather provides a guide for readers regarding entities likely to be regulated by this proposed action. This table lists the types of entities that EPA is now aware could potentially be regulated by this proposed action. Other types of entities not listed in the table could also be regulated. To determine whether your activities would be regulated by this proposed action, you should carefully examine the applicability criteria in 40 CFR parts 79, 80, 85, 86, 1065, and 1066 and the referenced regulations. If you have any questions regarding the applicability of this proposed action to a particular entity, consult the person listed in the preceding **FOR FURTHER INFORMATION CONTACT** section.

B. What should I consider as I prepare my comments for EPA?

1. Submitting CBI

Do not submit this information to EPA through *www.regulations.gov* or email. Clearly mark the part or all of the information that you claim to be CBI. For CBI information in a disk or CD ROM that you mail to EPA, mark the outside of the disk or CD ROM as CBI and then identify electronically within the disk or CD ROM the specific information that is claimed as CBI. In addition to one complete version of the comment that includes information claimed as CBI, a copy of the comment that does not contain the information claimed as CBI must be submitted for inclusion in the public docket. Information so marked will not be disclosed except in accordance with procedures set forth in 40 CFR part 2.

2. Tips for Preparing Your Comments

When submitting comments, remember to:

- Identify the rulemaking by docket number and other identifying information (subject heading, **Federal Register** date and page number).
- Follow directions—The agency may ask you to respond to specific questions or organize comments by referencing a Code of Federal Regulations (CFR) part or section number.
- Explain why you agree or disagree, suggest alternatives, and substitute language for your requested changes.
- Describe any assumptions and provide any technical information and/or data that you used.
- If you estimate potential costs or burdens, explain how you arrived at your estimate in sufficient detail to allow for it to be reproduced.
- Provide specific examples to illustrate your concerns, and suggest alternatives.
- Explain your views as clearly as possible, avoiding the use of profanity or personal threats.
- Make sure to submit your comments by the comment period deadline identified.

C. Did EPA conduct a peer review before issuing this notice?

This regulatory action was supported by influential scientific information. Therefore, EPA conducted peer reviews in accordance with OMB's Final Information Quality Bulletin for Peer Review. Specifically, EPA conducted six peer reviews in connection with data supporting the proposed Tier 3 program, including new research on the effects of fuel properties changes (including sulfur effects) on exhaust and evaporative emissions of Tier 2 vehicles. The refinery-by-refinery cost model was also peer reviewed. The peer review reports are located in the docket for today's action, as well as the agency's response to the peer review comments.

Table of Contents

I. Executive Summary and Overview of Proposed Program
A. Introduction
B. What are the basic components of the proposed program?
1. Proposed Standards for Light-Duty Vehicle, Light-Duty Truck, and Medium-Duty Passenger Vehicle Tailpipe Emissions
2. Proposed Heavy-Duty Vehicle Tailpipe Emissions Standards
3. Proposed Evaporative Emission Standards
4. Onboard Diagnostic Systems (OBD)
5. Emissions Test Fuel
6. Fuel Standards
7. Regulatory Streamlining and Technical Amendments
C. What would the impacts of the proposed standards be?
II. Why is EPA making this proposal?
A. Basis for Action Under the Clean Air Act
1. Clean Air Act Section 202
2. Clean Air Act Section 211
B. Overview of Public Health Impacts of Motor Vehicles and Fuels
1. Ozone
2. Particulate Matter
3. Nitrogen Oxides and Sulfur Oxides
4. Carbon Monoxide

5. Mobile Source Air Toxics
6. Near-Roadway Pollution
7. Environmental Impacts of Motor Vehicles and Fuels
III. How would this proposal reduce emissions and air pollution?
A. Effects of the Proposed Vehicle and Fuel Changes on Mobile Source Emissions
1. How do vehicles produce the emissions addressed in this proposal?
2. How would the proposed changes to gasoline sulfur content affect vehicle emissions?
B. How would emissions be reduced?
1. NO_X
2. VOC
3. CO
4. Direct $PM_{2.5}$
5. Air Toxics
6. SO_2
7. Greenhouse Gases
C. How would air pollution be reduced?
1. Ozone
2. Particulate Matter
3. Nitrogen Dioxide
4. Air Toxics
5. Visibility
6. Nitrogen and Sulfur Deposition
7. Environmental Justice
IV. Proposed Vehicle Emissions Program
A. Tailpipe Emission Standards for Light-Duty Vehicles, Light-Duty Trucks, and Medium-Duty Passenger Vehicles
1. Overview
2. Summary of Proposed FTP and SFTP Tailpipe Standards
3. Proposed FTP Standards
4. Proposed SFTP Standards
5. Feasibility of the Proposed NMOG+NO_X and PM Standards
6. Impact of Gasoline Sulfur Control on the Feasibility of the Proposed Vehicle Emission Standards
7. Other Provisions
B. Tailpipe Emissions Standards for Heavy-Duty Vehicles
1. Overview
2. HDV Exhaust Emissions Standards
3. Supplemental FTP Standards for HDVs
4. HDV Emissions Averaging, Banking, and Trading
5. Feasibility of HDV Standards
6. Other HDV Provisions
C. Evaporative Emissions Standards and Onboard Diagnostic System Requirements
1. Tier 3 Evaporative Emission Standards
2. Evaporative Emissions Program Structure and Implementation Flexibilities
3. Heavy-Duty Gasoline Vehicle (HDGV) Requirements
4. Test Procedures and Certification Test Fuel
5. Improvements to In-Use Performance of Fuel Vapor Control Systems
6. Other Initiatives
D. Emissions Test Fuel
1. Proposed Changes to Gasoline Emissions Test Fuel
2. Proposed Flexible Fuel Vehicle Test Fuel
3. Proposed Implementation Schedule
4. Potential Implications on CAFE Standards, GHG Standards, and Fuel Economy Labels
5. Consideration of Nonroad, Motorcycle, and Heavy-Duty Engine Emissions Test Fuel
6. Consideration of CNG and LPG Emissions Test Fuel
E. Small-Business Provisions
1. Lead Time for Exhaust and Evaporative Emission Standards
2. Assigned Deterioration Factors
3. Reduced Testing Burden
4. Hardship
5. Applicability of Flexibilities
F. Compliance Provisions
1. Exhaust Emission Test Procedures
2. Reduced Test Burden
3. Miscellaneous Provisions
4. Manufacturer In-Use Verification Testing (IUVP) Requirements
V. Proposed Fuel Program
A. Proposed Tier 3 Gasoline Sulfur Standards
1. Overview
2. Proposed Annual Average Sulfur Standard
3. Per-Gallon Sulfur Caps
B. Refinery Air Permitting Interactions
1. Background on New Source Review Programs
2. Background on NSR Experience Under the Tier 2 Fuel Program
3. Changes in the NSR Permitting Program since Tier 2 Final Rule
4. Assessment of Tier 3 Refinery Changes and Permitting Implications
5. New Source Performance Standards and National Emission Standards for Hazardous Air Pollutants for Refineries
6. Steps for Streamlining the Permitting Process
C. Standards for Denatured Fuel Ethanol and Other Oxygenates
D. Standards for Fuel Used in Flexible Fueled Vehicles
1. Standards for E51–83
2. Standards for Mid-Level Ethanol Blends (E16–50)
E. Proposed Program Flexibilities
1. Averaging, Banking, and Trading Program
2. Regulatory Flexibility Provisions
3. Provisions for Refiners Facing Hardship Situations
F. Compliance Provisions
1. Registration, Reporting, and Recordkeeping Requirements
2. Sampling and Testing Requirements
3. Small Refiner Compliance
4. Small Volume Refinery Compliance
5. Attest Engagements, Violations, and Penalties
6. Special Fuel Provisions and Exemptions
G. Statutory Authority for Proposed Tier 3 Fuel Controls
1. Section 211(c)(1)(A)
2. Section 211(c)(1)(B)
VI. Technical Amendments and Regulatory Streamlining
A. Amendments to 40 CFR Parts 79 and 80
1. Regulatory Streamlining
2. Subpart I Technical Amendments
3. Performance-Based Measurement Systems (PBMS)
4. Downstream Pentane Blending
B. Engine, Vehicle and Equipment Programs
1. Fuel Economy Labeling
2. Removing Obsolete Regulatory Text
3. Motorcycle Driving Schedules
4. Updating Reference Procedures
VII. What are the cost impacts of the proposed rule?
A. Estimated Costs of the Vehicle Standards
B. Estimated Costs of the Fuel Program
1. Overview
2. Methodology
3. Summary of Costs Without ABT Program
4. Summary of Costs With ABT Program
5. Other Cost Estimates
C. Summary of Proposed Program Costs
D. Cost per Ton of Emissions Reduced
VIII. What are the estimated benefits of the proposed rule?
A. Overview
B. Quantified Human Health Impacts
C. Monetized Benefits
D. What are the limitations of the benefits analysis?
E. Illustrative Analysis of Monetized Impacts Associated With the Proposal in 2017
IX. Alternatives Analysis
A. Vehicle Emission Standards
1. Shorter NMOG+NO_X Standard Phase-in
2. Longer NMOG+NO_X Standards Phase-in Due to Early Credits
3. Shorter PM Standards Phase-in
4. NMOG+NO_X Standards
5. PM Standards
B. Fuel Sulfur Standards
X. Economic Impact Analysis
A. Introduction
B. Vehicle Sales Impacts
C. Impacts on Petroleum Refinery Sector Production
D. Employment Impacts
1. Employment Impacts in the Auto Sector
2. Refinery Employment Impacts
XI. Public Participation
A. How do I submit comments?
B. How should I submit CBI to the Agency?
C. What should I consider as I prepare my comments for EPA?
D. Will there be a public hearing?
XII. Statutory and Executive Order Reviews
A. Executive Order 12866: Regulatory Planning and Review and Executive Order 13563: Improving Regulation and Regulatory Review
B. Paperwork Reduction Act
C. Regulatory Flexibility Act
1. Overview
2. Background
3. Reason for Today's Proposed Rule
4. Legal Basis for Agency Action
5. Summary of Potentially Affected Small Entities
6. Potential Reporting, Recordkeeping, and Compliance
7. Related Federal Rules
8. Summary of SBREFA Panel Process and Panel Outreach
D. Unfunded Mandates Reform Act
E. Executive Order 13132: Federalism
F. Executive Order 13175: Consultation and Coordination With Indian Tribal Governments
G. Executive Order 13045: Protection of Children From Environmental Health Risks and Safety Risks
H. Executive Order 13211: Actions Concerning Regulations That

Significantly Affect Energy Supply, Distribution, or Use
I. National Technology Transfer and Advancement Act
J. Executive Order 12898: Federal Actions To Address Environmental Justice in Minority Populations and Low-Income Populations
XIII. Statutory Provisions And Legal Authority

I. Executive Summary and Overview of Proposed Program

A. Introduction

In this action, EPA is proposing a major program designed to reduce air pollution from passenger cars and trucks. This program includes new standards for both vehicle emissions and the sulfur content of gasoline, considering the vehicle and its fuel as an integrated system. We refer to this proposed program as the ''Tier 3'' vehicle and fuel standards.

This proposed rule is part of a comprehensive approach to address the impacts of motor vehicles on air quality and public health. Over 158 million Americans are currently experiencing unhealthy levels of air pollution, which are linked with respiratory and cardiovascular problems and other adverse health impacts that lead to increased medication use, hospital admissions, emergency department visits, and premature mortality.[1] Motor vehicles are a particularly important source of exposure to air pollution, especially in urban areas. By 2014 we project that in many nonattainment areas, cars and light trucks will contribute 30–45 percent of total nitrogen oxides (NO_X) emissions, 20–25 percent of total volatile organic compound (VOC) emissions, and 5–10 percent of total direct particulate matter ($PM_{2.5}$) emissions.[2] These compounds form ozone, PM, and other air pollutants, whose health and environmental effects are described in more detail in Section II. Cars and light trucks also continue to be a significant contributor to air pollution directly near roads, with gasoline vehicles accounting for more than 50 percent of near-road concentrations of some criteria and toxic pollutants.[3] More than 50 million people live, work, or go to school in close proximity to high-traffic roadways, and the average American spends more than one hour traveling along roads each day.[4] [5] Almost 90 percent of daily trips use personal vehicles.[6]

The standards set forth in this proposed rule would significantly reduce levels of multiple air pollutants (such as ambient levels of ozone, PM, nitrogen dioxide (NO_2), and mobile source air toxics (MSATs)) across the country, with immediate impacts expected due to the proposed sulfur control standards starting in 2017. These reductions would help state and local agencies in their effort to attain and maintain health-based National Ambient Air Quality Standards (NAAQS). Few other national strategies exist that would deliver the same magnitude of multi-pollutant reductions projected to result from the proposed Tier 3 standards. In the absence of additional controls, many areas will continue to have ambient ozone concentrations exceeding the NAAQS in the future. See Section III.C for more details.

The Clean Air Act authorizes EPA to establish emissions standards for motor vehicles to address air pollution that may reasonably be anticipated to endanger public health or welfare (section 202). EPA also has authority to establish fuel controls to address such air pollution (section 211). These statutory authorities are described in Section II.A.

The vehicle and gasoline sulfur standards we are proposing represent a ''systems approach'' to reducing vehicle-related exhaust and evaporative emissions by addressing the vehicle and fuel as a system. The systems approach enables emission reductions that are both technologically feasible and cost-effective beyond what would be possible looking at vehicle and fuel standards in isolation. We first applied such an approach with our Tier 2 vehicle/gasoline sulfur standards (finalized in 2000).[7] We believe that a similar approach for the proposed Tier 3 standards would be a cost-effective way to achieve substantial additional emissions reductions.

The proposed Tier 3 standards include new light- and heavy-duty vehicle emission standards for exhaust emissions of VOC (specifically, non-methane organic gases, or NMOG), NO_X, and PM, as well as evaporative emissions standards. The proposed standards for light-duty vehicle, light-duty truck, and medium-duty passenger vehicle tailpipe emissions are an 80 percent reduction in fleet average NMOG+NO_X compared to current standards, and a 70 percent reduction in per-vehicle PM standards. The proposed Tier 3 heavy-duty vehicle tailpipe emissions standards provide reductions in both NMOG+NO_X and PM that are on the order of 60 percent, compared to current standards. The proposed evaporative emissions standards represent a 50 percent reduction from current standards.

The vehicle emission standards, combined with the proposed reduction of gasoline sulfur content from the current 30 parts per million (ppm) average down to a 10-ppm average, would result in dramatic emissions reductions for NO_X, VOC, direct $PM_{2.5}$, carbon monoxide (CO) and air toxics. For example, in 2030, when Tier 3 vehicles would make up the majority of the fleet as well as vehicle miles travelled, NO_X and VOC emissions from on-highway vehicles would be reduced by about one quarter, and CO emissions would be reduced by about 30 percent. Emissions of many air toxics would also be reduced by 10 to nearly 40 percent of national emissions from on-highway vehicles. Reductions would continue beyond 2030 as more of the fleet is composed of Tier 3 vehicles. For example, the Tier 3 program would reduce on-highway emissions of NO_X and VOC nearly 40 percent by 2050, when Tier 3 vehicles would comprise almost the entire fleet.

Gasoline vehicles depend to a great degree on catalytic converters to reduce levels of pollutants in their exhaust, including NMOG and NO_X, as well as PM (specifically, the volatile hydrocarbon fraction), CO, and most air toxics. The catalytic converters become significantly less efficient when sulfur

[1] Data come from Summary Nonattainment Area Population Exposure Report, current as of December 14, 2012 at: *http://www.epa.gov/oar/oaqps/greenbk/popexp.html* and contained in Docket EPA–HQ–OAR–2011–0135.

[2] Mobile source contributions derived from inventories developed for the Final Cross-State Air Pollution Rule (76 FR 48208, August 8, 2011). For more information on these inventories see the ''Technical Support Document (TSD) for the final Transport Rule, Docket ID No. EPA–HQ–OAR–2009–0491, Emissions Inventory Final Rule TSD,'' available on the web at *ftp://ftp.epa.gov/EmisInventory/2005v4_2/transportrulefinal_eitsd_28jun2011.pdf*.

[3] For example, see Fujita, E.M; Campbell, D.E.; Zielinska, B.; Arnott, W.P.; Chow, J.C. (2011) Concentrations of Air Toxics in Motor Vehicle-Dominated Environments. Health Effects Institute Research Report 156. Available at *http://www.healtheffects.org*

[4] U.S. Census Bureau (2011). Current Housing Reports, Series H150/09, American Housing Survey for the United States: 2009. U.S. Government Printing Office, Washington, DC. Available at *http://www.census.gov/hhes/www/housing/ahs/ahs09/ahs09.html*. (Note that this survey includes estimates of homes within 300 feet of highways with four or more lanes, railroads, and airports.)

[5] Drago, R. (2011). Secondary activities in the 2006 American Time Use Survey. U.S. Bureau of Labor Statistics Working Paper 446. Available at *http://www.bls.gov*.

[6] U.S. Department of Transportation, Bureau of Transportation Statistics (2003). National Household Travel Survey 2001 Highlights Report. Government Printing Office, Washington, DC. Available at *http://www.bts.gov/publications/highlights_of_the_2001_national_household_travel_survey/*.

[7] 65 FR 6698 (February 10, 2000).

from the gasoline is deposited (adsorbed) onto the precious metals that catalyze the reactions to reduce the emissions. The Tier 2 rulemaking required refiners to take steps to reduce sulfur levels in gasoline by approximately 90 percent, to an average of 30 ppm. As discussed in Section IV.A.6, subsequent research provides a compelling case that even this level of sulfur not only degrades the emission performance of vehicles on the road today, but also inhibits necessary further reductions in vehicle emissions performance to reach the proposed Tier 3 standards. Thus, the proposed Tier 3 10-ppm average sulfur standard is significant in two ways: it enables vehicles designed to the proposed Tier 3 tailpipe exhaust standards to meet these standards in-use for the duration of their useful life, and it facilitates immediate emission reductions from all the vehicles on the road at the time the sulfur controls are implemented. Lower sulfur gasoline also facilitates the development of lower-cost technologies to improve fuel economy. Sulfur in the fuel quickly causes the fuel economy benefits of lean-burn technologies to disappear due to its effect on NOx adsorber operation requiring more fuel to be burned. We are not the first regulatory agency to recognize the need for lower-sulfur gasoline. Agencies in Europe and Japan have already imposed gasoline sulfur caps of 10 ppm, and the State of California is already averaging 10 ppm sulfur with a per gallon cap of 20 ppm. Other states are preempted by the Clean Air Act from adopting new fuel programs to meet air quality objectives. Consequently, they could not receive the air quality benefits of lower sulfur gasoline without federal action.

This proposal is one aspect of a comprehensive national program regulating emissions from motor vehicles. EPA's recent final rule for reducing greenhouse gas (GHG) emissions from light-duty (LD) vehicles starting with model year (MY) 2017 (referred to here as the ''2017 LD GHG'' standards) is another aspect of this comprehensive program.[8] The Tier 3 proposal addresses interactions with the 2017 LD GHG rule in a manner that aligns implementation of the two actions, to achieve significant criteria pollutant and GHG emissions reductions while providing regulatory certainty and compliance efficiency. As vehicle manufacturers introduce new vehicle platforms for compliance with the GHG standards, they will be able to design them for compliance with the Tier 3 standards at the same time. The proposed Tier 3 standards are also closely coordinated with California's Low Emission Vehicle (LEV III) program to create a vehicle emissions program that would allow automakers to sell the same vehicles in all 50 states. (In December 2012 EPA approved a waiver of Clean Air Act preemption for the California Air Resources Board's (CARB's) LEV III program with compliance beginning in 2015. Ten states have adopted the LEV III program under Section 177 of the Clean Air Act.[9]) We have worked closely with individual vehicle manufacturers and their trade associations, who have emphasized the importance of a harmonized national program. Together, the Tier 3, 2017 LD GHG, and LEV III standards would maximize reductions in GHGs, criteria pollutants and air toxics from motor vehicles while streamlining programs and enabling manufacturers to design a single vehicle for nationwide sales, thus reducing their costs of compliance. In this way, the Tier 3 proposal responds to the May 21, 2010 Presidential Memorandum that requested that EPA develop a comprehensive approach toward regulating motor vehicles, including consideration of non-GHG emissions standards.[10]

As part of the systems approach to this program, we are considering the future fuels on which vehicles will be operating. In particular, the renewable fuels mandate that was revised by the Energy Independence and Security Act (EISA) and is being implemented through the Renewable Fuel Standards program (RFS2)[11] will result in significant amounts of ethanol-blended gasoline in the implementation timeframe of the proposed Tier 3 program. We are proposing to update the specifications of the certification test fuel with which vehicles demonstrate compliance with emissions standards, in order to better reflect the ethanol content and other properties of gasoline that will be in use.

This section provides an overview of the vehicle- and fuel-related standards we are proposing as well as the impacts of the proposed standards. The public health issues and statutory requirements that have prompted this proposal are described in Section II, and our discussion of how the proposal would reduce emissions and air pollution is presented in Section III. Details of proposed standards and how they would be implemented can be found in Sections IV through VI. Sections VII through X contain our discussion of the proposed standards' technological feasibility and cost, benefits, alternatives and economic impacts.

B. What are the basic components of the proposed program?

In the more than 10 years since EPA finalized the Tier 2 Vehicle Program, manufacturers of light-duty vehicles have continued to develop a wide range of improved technologies capable of reducing key exhaust emissions, especially VOC, NO_X, and PM. The California LEV II program has been instrumental in the continuous technology improvements by requiring year after year reductions in the fleet average hydrocarbon levels, in addition to requiring the introduction of advanced exhaust and evaporative emission controls in partial zero emission vehicles (PZEVs). This progress in vehicle technology has made it possible for manufacturers to achieve emission reductions well beyond the requirements of the Tier 2 program if gasoline sulfur levels are lowered further.

As a result, we are proposing new standards for exhaust emissions of NMOG, NO_X, and PM, as well as evaporative emissions standards. These standards would phase in beginning with MY 2017. The proposed Tier 3 standards are very similar in structure to those in the existing Tier 2 program. As with the Tier 2 program, the proposed standards would apply to all light-duty vehicles (LDVs, or passenger cars), light-duty trucks (LDT1s, LDT2s, LDT3s, and LDT4s) and Medium-Duty Passenger Vehicles (or MDPVs). We are also proposing separate but closely related standards for heavy-duty vehicles up to 14,000 lbs Gross Vehicle Weight Rating (GVWR). These vehicles were not included in Tier 2 but were made subject to new standards in a final rule that covered the broad heavy-duty sector (66 FR 5002, January 18, 2001). We have concluded that the proposed vehicle emissions standards, in conjunction with the reductions in fuel sulfur also proposed in this action, are feasible across the fleet in the proposed time frame.

In the discussions of the various elements of our proposed program for light- and heavy-duty vehicles throughout this preamble, we describe how the provisions would be consistent with the California Air Resources Board (CARB) LEV III program. Auto

[8] 77 FR 62623 (October 15, 2012).

[9] These states include Connecticut, Maryland, Maine, Massachusetts, New Jersey, New York, Pennsylvania, Rhode Island, Washington, and Vermont.

[10] The Presidential Memorandum is found at: *http://www.whitehouse.gov/the-press-office/presidential-memorandum-regarding-fuel-efficiency-standards.*

[11] 75 FR 14670 (March 26, 2010).

manufacturers have stressed to us the importance of their being able to design and produce a single fleet of vehicles in all 50 states that would comply with requirements under the Tier 3 program and the LEV III program, as well as greenhouse gas/Corporate Average Fuel Economy (CAFE) requirements in the same timeframe. Consistency among the federal and California programs means that special versions of vehicles with different emission control hardware and calibrations would not be necessary for different geographic areas. This would allow manufacturers to avoid the additional costs of parallel design, development, calibration, and manufacturing. Consistency among programs would also eliminate the need to supply aftermarket parts for repair of multiple versions of a vehicle. To that end, we worked closely with CARB and with the vehicle manufacturers, both with individual companies and with their trade associations, to align the two programs in most respects.

We have also designed the proposed Tier 3 program to be implemented in the same timeframe as the federal and California GHG emissions and fuel economy standards for model years 2017–2025. We expect that in response to these programs, manufacturers will be developing entirely new powertrains for most of their vehicles. Because the Tier 3 standards would phase in over the same timeframe, manufacturers would be in a position to simultaneously respond to all of these requirements.

1. Proposed Standards for Light-Duty Vehicle, Light-Duty Truck, and Medium-Duty Passenger Vehicle Tailpipe Emissions

We are proposing a comprehensive program that would include new fleet-average standards for the sum of NMOG and NO_X tailpipe emissions (presented as NMOG+NO_X) and for PM.[12] These proposed standards, when applied in conjunction with reduced gasoline sulfur content, would result in very significant improvements in vehicle emissions from the levels of the Tier 2 program. For these pollutants, we are proposing standards as measured on test procedures that represent a range of vehicle operation, including the Federal Test Procedure (or FTP, simulating typical driving) and the Supplemental Federal Test Procedure (or SFTP, a composite test simulating higher temperatures, higher speeds, and quicker accelerations). In addition to the standards, we are also proposing to extend the regulatory useful life period during which the standards apply and to make test fuel more representative of expected real-world fuel (see Section I.B.5 below).

As discussed in Section IV.A.6., the impact of gasoline sulfur poisoning on exhaust catalyst performance provides a compelling argument, particularly for larger vehicles and trucks, that these vehicle standards would be achievable only with a reduction of gasoline sulfur content from the current 30-ppm average down to a 10-ppm average. Sulfur is a well-known catalyst poison. The nature of sulfur's interactions with active catalytic materials is complex and varies with catalyst composition, exhaust gas composition and exhaust temperature. Thus, even if a manufacturer were able to certify a new vehicle to the proposed new stringent standards, the manufacturer's ability to maintain the emission performance of that vehicle in-use is greatly jeopardized if the vehicle is being operated on gasoline sulfur levels greater than 10 ppm. Vehicle manufacturers, both individually and through their trade associations, have emphasized that reduced gasoline sulfur would be required to meet the proposed standards.[13] [14] Due to the variation in actual vehicle operation, any amount of gasoline sulfur will deteriorate catalyst efficiency. However, we believe that a 10-ppm average sulfur level is sufficiently low to enable compliance with these proposed Tier 3 vehicle standards, and as described below and in Section V, reducing sulfur levels further would cause sulfur control costs to quickly escalate.

The proposed FTP and SFTP NMOG+NO_X standards would be fleet-average standards, meaning that a manufacturer would calculate the average emissions of the vehicles it sells in each model year and compare that average to the applicable standard for that model year. The manufacturer would certify each of its vehicles to a per-vehicle ''bin'' standard (see Section IV.A.2) and sales-weight these values to calculate its fleet-average NMOG+NO_X emissions for each model year. The proposed fleet average standards for NMOG+NO_X evaluated over the FTP are summarized in Table I–1. The standards for light-duty vehicles would begin in MY 2017 at a level representing a 46 percent reduction from the current Tier 2 requirements. (For vehicles over 6000 lbs GVWR, the standards would apply beginning in MY 2018). As shown, these proposed fleet-average standards would decline during the first several years of the program, becoming increasingly stringent until ultimately reaching an 81 percent reduction when the transition is complete. The proposed FTP NMOG+NO_X program includes two separate sets of declining fleet-average standards, with LDVs and small light trucks (LDT1s) in one grouping and heavier light trucks (LDT2s, LDT3s, LDT4s) and MDPVs in a second grouping, that would converge at 30 milligram per mile (mg/mi) in MY 2025 and later.[15]

Manufacturers could also earn credits for fleet average NMOG+NO_X levels below the applicable standard in any model year. Credits that were previously banked or obtained from other manufacturers could be used, or credits could be transferred to other manufacturers (see Section IV.A.7.a). Unused credits would expire after 5 model years. Manufacturers would also be allowed to carry deficits in their credit balance for up to 3 model years.

[12] A discussion of the reasons for combining the two pollutants for this purpose is in Section IV.A.3.a below.

[13] Letter to EPA Administrator Jackson, with white paper, from Alliance of Automobile Manufacturers, October 6, 2011.

[14] Global Automakers letter to EPA Administrator Jackson, October 21, 2011.

[15] Alternatively, a manufacturer could choose to certify its entire fleet of passenger cars and light trucks to the 30 mg/mi level beginning in MY 2017 and continuing for all subsequent model years. A percent phase-in would apply. This would not be a fleet-average standard.

TABLE I–1—PROPOSED LDV, LDT, AND MDPV FLEET AVERAGE NMOG+NO_X FTP STANDARDS

[mg/mi]

	Model year								
	2017 [a]	2018	2019	2020	2021	2022	2023	2024	2025 and later
LDV/LDT1 [b]	86	79	72	65	58	51	44	37	30
LDT2,3,4 and MDPV	101	92	83	74	65	56	47	38	30

[a] For vehicles above 6000 lbs GVWR, the fleet average standards would apply beginning in MY 2018.

[b] These proposed standards would apply for a 150,000 mile useful life. Manufacturers could choose to certify all of their LDVs and LDT1s to a useful life of 120,000 miles. If any of these families are certified to the shorter useful life, a proportionally lower numerical fleet-average standard would apply, calculated by multiplying the respective 150,000 mile standard by 0.85 and rounding to the nearest mg. See Section IV.A.7.b.

Similarly, the proposed NMOG+NO_X standards measured over the SFTP would be fleet-average standards, declining from MY 2017 until MY 2025, as shown in Table I–2. In this case, the same standards would apply to both lighter and heavier vehicles. In MY 2025, the SFTP NMOG+NO_X standard would reach its final fleet average level of 50 mg/mi.

TABLE I–2—PROPOSED LDV, LDT, AND MDPV FLEET AVERAGE NMOG+NO_X SFTP STANDARDS

[mg/mi]

	Model year								
	2017 [a]	2018	2019	2020	2021	2022	2023	2024	2025 and later
NMOG + NO_X	103	97	90	83	77	70	63	57	50

[a] For vehicles above 6000 lbs GVWR, the fleet average standards would apply beginning in MY 2018.

We are also proposing PM standards as part of this Tier 3 program, both on the FTP and US06 cycles (US06 is a component of the SFTP test). Research has demonstrated that the level of PM from gasoline light-duty vehicles is more significant than previously thought.[16] Although many vehicles today are performing at or near the levels of the proposed standards, the data indicate that improvements, especially in high-load fuel control and in the durability of engine components, are possible.

Under typical driving, as simulated by the FTP, the PM emissions of most current-technology gasoline vehicles are fairly low at certification and in use, well below the Tier 2 p.m. standards. At the same time we see considerable variation in PM emissions among vehicles of various makes, models, and designs. As a result, we are proposing a new FTP PM standard that is set to ensure that all new vehicles perform at the level already being achieved by well-designed Tier 2 emission control technologies. The proposed PM standards would apply to each vehicle separately (i.e., not as a fleet average). Also, in contrast to the declining NMOG+NO_X standards, the proposed PM standard on the FTP for certification testing is 3 mg/mi for all vehicles and for all model years. As for the NMOG+NO_X standards, for vehicles over 6000 lbs GVWR, the FTP PM standard would apply beginning in MY 2018. Manufacturers could phase in their vehicle models as a percent of U.S. sales through MY 2022. Most vehicles are already performing at this stringent PM level, and the primary intent of the proposed standard is to bring all light-duty vehicles to the typical level of PM performance being demonstrated by the current light-duty fleet.

The proposed program also includes a separate in-use FTP PM standard of 6 mg/mi for the testing of in-use vehicles that would apply during the percent phase-in period only. This in-use standard would address the uncertainties that accompany the introduction of new technologies, and then expire. Table I–3 presents the FTP certification and in-use PM standards and the phase-in percentages. The proposed standards represent a significant numerical reduction from the Tier 2 p.m. emission standards of 10 mg/mi for light-duty vehicles.

TABLE I–3—PHASE-IN FOR PROPOSED FTP PM STANDARDS

	2017 [a]	2018	2019	2020	2021	2022 and later
Phase-In (percent of U.S. sales).	20	20	40	70	100	100
Certification Standard (mg/mi)	3	3	3	3	3	3

[16] Nam, E.; Fulper, C.; Warila, J.; Somers, J.; Michaels, H.; Baldauf, R.; Rykowski, R.; and Scarbro, C. (2008). Analysis of Particulate Matter Emissions from Light-Duty Gasoline Vehicles in Kansas City, EPA420–R–08–010. Assessment and Standards Division Office of Transportation and Air Quality U.S. Environmental Protection Agency Ann Arbor, MI, April 2008.

TABLE I–3—PHASE-IN FOR PROPOSED FTP PM STANDARDS—Continued

	2017 [a]	2018	2019	2020	2021	2022 and later
In-Use Standard (mg/mi).	6	6	6	6	6	3

[a] For vehicles above 6000 lbs GVWR, the proposed FTP PM standards would apply beginning in MY 2018.

Finally, the proposed Tier 3 program includes certification PM standards evaluated over the SFTP (specifically the US06 component of the SFTP procedure) at a level of 10 mg/mi for lighter vehicles and 20 mg/mi for heavier vehicles. PM levels over the SFTP are typically higher than the PM emitted over the FTP due to the increased load on the vehicle. Test data show that most current light-duty vehicles are already performing in the range of the proposed standard. As in the case of the FTP PM standards, the intent of the proposed standard is to bring the emission performance of all vehicles to that already being demonstrated by many vehicles in the current light-duty fleet.

As with the FTP PM standard, we propose separate in-use US06 p.m. standards during the percent phase-in only, of 15 and 25 mg/mi for vehicles up to and above 6,000 lbs (lbs) GVWR, respectively. The US06 p.m. standards would also phase in on the same schedule as the FTP PM standards, reaching 100 percent of each company's U.S. sales by MY 2022.

2. Proposed Heavy-Duty Vehicle Tailpipe Emissions Standards

As discussed in detail in Section IV.B, we are proposing Tier 3 exhaust emissions standards for complete heavy-duty vehicles (HDVs) between 8,501 and 14,000 lb GVWR. Vehicles in this GVWR range are often referred to as Class 2b (8,501–10,000 lb) and Class 3 (10,001–14,000 lb) vehicles, and are typically full-size pickup trucks and work vans. Most are built by companies with even larger light-duty truck markets, and as such they frequently share major design characteristics and potential emissions control technologies with their LDT counterparts. However, in contrast to the largely gasoline-fueled LDT fleet, roughly half of the HD pickup and van fleet in the U.S. is diesel-fueled, which is a consideration in setting emissions standards, as diesel engine emissions and control strategies differ from those of gasoline engines.

The key elements of the proposed Tier 3 program for HDVs would parallel those proposed for passenger cars and LDTs, with adjustments in standards levels, emissions test requirements, and implementation schedules, appropriate to this sector. These key elements include a combined NMOG+NO_X declining fleet average standard, new stringent PM standards phasing in on a separate schedule, adoption of a 15 percent ethanol by volume (E15) certification test fuel for gasoline-fueled vehicles, extension of the regulatory useful life to 150,000 miles or 15 years (whichever occurs first), and a new requirement to meet standards over an SFTP that would address real-world driving modes not well-represented by the FTP cycle alone.

We are proposing the separate Class 2b and Class 3 fleet average NMOG+NO_X standards shown in Table I–4. The proposed standards would become more stringent in successive model years from 2018 to 2022, with voluntary standards made available in 2016 and 2017, all of which would be set at levels that match those of California's LEV III program for these classes of vehicles. Each covered HDV sold by a manufacturer in each model year would contribute to this fleet average based on the mg/mi NMOG+NO_X level of the emission level (''bin'') declared for it by the manufacturer. Manufacturers could also earn credits for fleet average NMOG+NO_X levels below the standard in any model year. Tier 3 credits that were previously banked, obtained from other manufacturers, or transferred across the Class 2b/Class 3 categories could be used to help demonstrate compliance. Unused credits would expire after 5 model years. Manufacturers would also be allowed to carry deficits in their credit balance for up to 3 model years.

TABLE I–4—PROPOSED HDV FLEET AVERAGE NMOG+NO_X STANDARDS

[mg/mi]

	Voluntary		Required program.				
Model Year	2016	2017	2018	2019	2020	2021	2022 and later.
Class 2b	333	310	278	253	228	203	178.
Class 3	548	508	451	400	349	298	247.

We are proposing PM standards of 8 mg/mi and 10 mg/mi for Class 2b and Class 3 HDVs, respectively, phasing in as an increasing percentage of a manufacturer's sales per year. We are proposing the same phase-in schedule as proposed for the light-duty sector during model years 2018–2019–2020–2021: 20–40–70–100 percent, respectively, and a more flexible but equivalent alternative PM phase-in is also being proposed. Tier 3 HDVs would also be subject to more stringent CO and formaldehyde exhaust emissions standards.

Finally, we are proposing first-ever SFTP standards for HDVs to ensure a robust overall control program that precludes high off-FTP cycle emissions by having vehicle designers consider them in their choice of compliance strategies. As for light-duty vehicles, we are proposing that SFTP compliance be based on a weighted composite of measured emissions from testing over the FTP cycle, the SC03 cycle, and an aggressive driving cycle, with the latter tailored to various HDV sub-categories: the US06 cycle for most HDVs, the highway portion of the US06 cycle for low power-to-weight Class 2b HDVs, and the LA–92 (or ''Unified'') cycle for Class 3 HDVs. The proposed SFTP standards are the same as those adopted for California LEV III vehicles, and would apply to NMOG+NO_X, PM, and CO emissions.

Overall, we expect the Tier 3 program we are proposing for HDVs to result in

substantial reductions in harmful emissions from this large fleet of work trucks and vans. The final Tier 3 standards levels for NMOG+NO_X and PM are on the order of 60 percent lower than the current stringent standards that took full effect in the 2009 model year.

3. Proposed Evaporative Emission Standards

Gasoline vapor emissions from vehicle fuel systems occur when a vehicle is in operation, when it is parked, and when it is being refueled. These evaporative emissions, which occur on a daily basis from gasoline-powered vehicles, are primarily functions of temperature, fuel vapor pressure, and activity. EPA first instituted evaporative emission standards in the early 1970s to address emissions when vehicles are parked after being driven. These are commonly referred to as hot soak plus diurnal emissions. Over the subsequent years the test procedures have been modified and improved and the standards have become more numerically stringent. We have addressed emissions which arose from new fuel system designs by putting in place new requirements such as running loss emission standards and test procedure provisions to address permeation emissions. Subsequently standards were put in place to control refueling emissions from all classes of gasoline-powered motor vehicles up to 10,000 lbs GVWR. Even though evaporative and refueling emission control systems have been in place for most of these vehicles for many years, they still contribute about 30–40 percent of the summer on-highway mobile source hydrocarbon inventory. These fuel vapor emissions are ozone and PM precursors, and also contain air toxics such as benzene.

To control evaporative emissions, EPA is proposing more stringent standards that would require covered vehicles to have essentially zero fuel vapor emissions in use. These include more stringent evaporative emissions standards, new test procedures, and a new fuel/evaporative system leak emission standard. The program also includes refueling emission standards for a portion of heavy-duty gasoline vehicles (HDGVs) over 10,000 lbs GVWR. EPA is proposing phase-in flexibilities as well as credit and allowance programs. The proposed standards, harmonized with California's ''zero evap'' standards, are designed to essentially allow for a use of common technology in vehicle models sold throughout the U.S. The level of the standard remains above zero to account for nonfuel background emissions from the vehicle hardware itself.

Requirements to meet the Tier 3 evaporative emission regulations would phase-in over a six model year period. We are proposing two options for the 2017 model year, but after that the sales percentage requirements are 60 percent for MYs 2018 and 2019, 80 percent for model years 2020 and 2021, and 100 percent for model years 2022 and later. In Table I–5 we present the proposed evaporative diurnal plus hot soak emission standards by vehicle class. The standards are approximately a 50 percent reduction from the existing standards. To enhance flexibility and reduce costs, EPA is proposing a program that would allow manufacturers to generate allowances through early certifications (basically before the 2017 model year) and to demonstrate compliance using averaging concepts. Manufacturers may comply on average within each of the four vehicle categories, but not across these categories. EPA is not proposing any changes to the existing light-duty running loss or refueling emission standards, with the exception of the certification test fuel requirement discussed in Section I.B.5 below.

TABLE I–5—PROPOSED EVAPORATIVE EMISSION STANDARDS

[g/test]

Vehicle class	Highest diurnal + hot soak level (over both 2-day and 3-day diurnal tests)
LDV, LDT1	0.300
LDT2	0.400
LDT3, LDT4, MDPV	0.500
HDGVs	0.600

EPA is proposing a new testing requirement referred to as the bleed emission test procedure to help ensure fuel vapor emissions are eliminated. Under this proposal, manufacturers would be required to measure diurnal emissions over the 2-day diurnal test procedure from just the fuel tank and the evaporative emission canister and comply with a 0.020 gram per test (g/test) standard for all LDVs, LDTs, and MDPVs, without averaging. The corresponding canister bleed test standard for HDGVs would be 0.030 g/test. The proposed Tier 3 evaporative emission standards would be phased in over a period of six model years between MY 2017 and MY 2022, with the leak test phasing in beginning in 2018.

Data from in-use evaporative emissions testing indicates that vapor leaks from vehicle fuel/evaporative systems are found in the fleet and that even very small leaks have the potential to make relatively significant contributions to the mobile source VOC inventory. To help address this issue, we are also proposing to add a new emission standard and test procedure to control vapor leaks from vehicle fuel and vapor control systems. The standard would prohibit leaks with a cumulative equivalent diameter of 0.02 inches or greater. We are proposing to add this simple and inexpensive test and emission standard to help ensure vehicles maintain zero fuel vapor emissions over their full useful life. New LDV, LDT, MDPV, and HDGV equal to or less than 14.000 lbs GVWR meeting the proposed Tier 3 evaporative emission regulations would also be required to meet the leak emission standard beginning in the 2018 model year. The requirement to meet the leak emission standard would phase-in on the same percentage of sales schedule as the proposed Tier 3 evaporative emission standard. Manufacturers would comply with the leak emission standard during certification and in use. EPA is not proposing that the leak emission standard apply to HDGVs above 14,000 lbs GVWR.

EPA is also proposing new refueling emission control requirements for all HDGVs equal to or less than 14,000 lbs GVWR (i.e., Class 2b/3 HDGVs), starting in the 2018 model year. EPA is proposing to include these vehicles as part of the same basic implementation scheme used for LDVs and LDTs. The current refueling emission control requirements apply to complete Class 2b HDGVs, and EPA is proposing to extend those requirements to Class 3 HDGVs as well, since the fuel and evaporative control systems on these vehicles are very similar to those on their slightly lighter-weight Class 2b counterparts.

4. Onboard Diagnostic Systems (OBD)

EPA and CARB both have OBD regulations applicable to the vehicle classes covered by the proposed Tier 3 emission standards. In the past the requirements have been very similar, so most manufacturers have met CARB OBD requirements and, as permitted in our regulations, EPA has generally accepted compliance with CARB's OBD requirements as satisfying EPA's OBD requirements. Over the past several years CARB has upgraded its requirements to help improve the effectiveness of OBD in ensuring good in-use exhaust and evaporative system emissions performance. We have reviewed these provisions and agree with CARB that these revisions will

help to improve in-use emissions performance, while at the same time harmonizing with the CARB program. Toward that end, we are proposing to adopt and incorporate by reference the current CARB OBD regulations effective for the 2017 MY. We are also proposing two specific additions to enhance the implementation of the leak emission standard. EPA would retain the provision that certifying with CARB's program would permit manufacturers to seek a separate EPA certificate on that basis.

5. Emissions Test Fuel

In-use gasoline has changed considerably since EPA's test fuel specifications were first set and last revised. Gasoline sulfur and benzene have been reduced and, perhaps most importantly, gasoline containing 10 percent ethanol by volume (E10) has replaced clear gasoline (E0) across the country. This has had second-order effects on other gasoline properties. In-use fuel is projected to continue to change with the implementation of the RFS2 program (e.g., the potential expansion of the number of retailers that offer gasoline containing 15 percent ethanol by volume (E15)) as well as today's proposed Tier 3 gasoline sulfur program.

As a result, we are proposing to update our federal emissions test fuel to better match today's in-use gasoline and also to be forward-looking with respect to future ethanol and sulfur content. The new test fuel specifications would apply to new vehicle certification, assembly line, and in-use testing. EPA is also proposing changes consistent with CARB's LEV III emissions test fuel specifications. Key changes include:

- Moving away from ''Indolene'' (E0) to an E15 test fuel;
- Lowering octane to match regular-grade gasoline (except for premium-required vehicles);
- Adjusting distillation temperatures, aromatics, and olefins to better match today's in-use fuel and to be consistent with anticipated E15 composition; and
- Lowering the existing sulfur specification and setting a benzene specification to be consistent with proposed Tier 3 gasoline sulfur requirements and recent MSAT2 gasoline benzene requirements.[17]

[17] 72 FR 8434 (February 26, 2007).

The proposed E15 emissions test fuel specifications are detailed in Section IV.D.1 as well as § 1065.710 of the proposed regulations. For more information on how we arrived at the proposed fuel parameters and ASTM test methods, refer to Chapter 3 of the draft Regulatory Impact Analysis (RIA).

In addition to proposing a new E15 emissions test fuel, we are also proposing for the first time detailed specifications for the E85 emissions test fuel used for flexible fuel vehicle (FFV) certification, as discussed in Section IV.D.2.[18] This is intended to avoid uncertainty and confusion in the certification of FFVs designed to operate on ethanol levels up to 83 percent. Furthermore, we are proposing to allow vehicle manufacturers to request approval for an alternative certification fuel such as a high-octane 30 percent ethanol by volume (E30) blend for vehicles they might design or optimize for use on such a fuel. This could help manufacturers that wish to raise compression ratios to improve vehicle efficiency, as a step toward complying with the 2017 and later light-duty greenhouse gas and CAFE standards (2017 LD GHG). This in turn could help provide a market incentive to increase ethanol use beyond E10 by overcoming the disincentive of lower fuel economy associated with increasing ethanol concentrations in fuel, and enhance the environmental performance of ethanol as a transportation fuel by using it to enable more fuel efficient engines.

In addition to seeking comment on all aspects of the proposed new emission test fuel requirements, we also seek comment on whether there are other aspects of today's proposed standards that, if modified, might provide an incentive for, or remove obstacles to, the development of highly efficient vehicles optimized for use on higher level ethanol blends.

6. Fuel Standards

Under the Tier 3 fuel program, we are proposing that gasoline and any ethanol-gasoline blend contain no more than 10 ppm sulfur on an annual average basis by January 1, 2017.

[18] Flexible fuel vehicles are currently required to meet emissions certification requirements using both E0 and E85 test fuels. However, there are currently no detailed regulatory specifications regarding the composition of E85 test fuels.

Similar to the Tier 2 gasoline program, the proposed Tier 3 program would apply to gasoline in the U.S. and the U.S. territories of Puerto Rico and the Virgin Islands, excluding California. The proposed program would result in gasoline that contains, on average, two-thirds less sulfur than it does today. In addition, following discussions with numerous refiners and other segments of the fuel market (e.g., pipelines, terminals, marketers, ethanol industry representatives, transmix processors, additive manufacturers), we are proposing a Tier 3 fuel program that contains considerable flexibility to ease both initial and long-term implementation of the program. We are proposing an averaging, banking, and trading (ABT) program that would allow refiners and importers to spread out their investments through an early credit program and rely on ongoing nationwide averaging to meet the 10-ppm sulfur standard. We are also proposing a three-year delay for small refiners and ''small volume refineries'' processing less than or equal to 75,000 barrels of crude oil per day. As a result of the early credit program, even considering the proposed ABT program and flexibilities offered to small refiners and small volume refineries, we anticipate considerable reductions in gasoline sulfur levels prior to 2017, with final refinery control to the 10-ppm average occurring by January 1, 2020. For more on the proposed gasoline sulfur program flexibilities, refer to Section V.D.

Under today's Tier 3 gasoline sulfur program, we are proposing to either maintain the current 80-ppm refinery gate and 95-ppm downstream per-gallon caps or lower them to 50 and 65 ppm, respectively. We also evaluated and are seeking comment on the potential of lowering the per-gallon caps to as low as 20 and 25 ppm. There are advantages and disadvantages with each of the various sulfur cap options (explained in more detail in Section V.A.3), but under all scenarios, the stringency of the 10-ppm annual average standard would result in reduced gasoline sulfur levels nationwide. A summary of the proposed Tier 3 sulfur standards is provided in Table I–6.

TABLE I–6—PROPOSED TIER 3 GASOLINE SULFUR STANDARDS

Proposed Tier 3 gasoline sulfur standards	Cap Option 1		Cap Option 2	
	Limit	Effective	Limit	Effective
Refinery annual average standard	10 ppm	January 1, 2017[a]	10 ppm	January 1, 2017.[a]
Refinery gate per-gallon cap	80 ppm	Already	50 ppm	January 1, 2020.
Downstream per-gallon cap	95 ppm	Already	65 ppm	March 1, 2020.

[a] Effective January 1, 2020 for eligible small refiners and small volume refineries.

We are proposing that manufacturers of gasoline additives that are used downstream of the refinery at less than 1 volume percent must limit the sulfur contribution to the finished gasoline from the use of their additive to less than 3 ppm when the additive is used at the maximum recommended treatment rate.

The proposed vehicle emissions standards are fuel neutral (i.e. they are applicable regardless of the type of fuel that the vehicle is designed to use). The sulfur content of highway diesel fuel is already required to meet a 15ppm sulfur cap. Thus, no further action is needed to enable diesel fuel vehicles to meet the proposed emissions standards. There currently are no sulfur standards for the fuel used in compressed natural gas (CNG) and liquid propane gas (LPG) vehicles. We request comment on whether it is necessary for EPA to establish sulfur standards for CNG and LPG, and whether a 15 ppm sulfur cap similar to that established for highway diesel fuel would be appropriate. Comment is also requested on whether and how to address the sulfur contribution from odorants and other additives used in CNG and LPG.

As the number of flex-fuel vehicles (FFVs) in the in-use fleet increases, it is now becoming increasingly important that all fuels used in FFVs, not just gasoline, meet fuel quality standards. A lack of clarity regarding the standards that apply to fuels used in FFVs could act to impede the further expansion of ethanol blended fuels with concentrations greater than 15 volume percent, which is important to satisfying the requirements of the RFS2 program. For these reasons, we believe it is important that our gasoline quality standards for not only sulfur, but also benzene, RVP, detergency, and chemical composition (i.e., contains only carbon, hydrogen, oxygen, nitrogen, and sulfur) apply to any fuel used in an FFV. At the same time, it is not necessarily clear how we should implement such standards within the context of our existing regulations as these fuels tend to be produced downstream of the petroleum refinery. For this reason we are seeking comment on both the need to extend our gasoline standards to all gasoline-ethanol blends, as well as the appropriate regulatory mechanisms for doing so.

7. Regulatory Streamlining and Technical Amendments

We are proposing and requesting comment in this action on a number of items to help streamline the in-use fuels regulations at 40 CFR part 80. The majority of items involve clarifying vague or inconsistent language, removal or updating of outdated provisions, and decrease in frequency and/or volume of reporting burden where data are no longer needed or are redundant with other EPA fuels programs. In general, we believe that these changes would reduce burden on industry and allow us to achieve the standards and resulting environmental benefits as early as possible with no expected loss in environmental control. In some cases, these regulatory streamlining items are non-substantive amendments that correct minor errors or inconsistencies in the regulations.

The regulatory streamlining items that we are proposing for the in-use fuels regulations are changes that we believe are straightforward and should be made quickly. In addition, there are a number of items that we believe need further consideration and discussion on which we are seeking comment.

The proposal also includes a variety of technical amendments to certification-related requirements for engine and vehicle emission standards. We are proposing to revise the fuel economy labeling requirements to correspond to the new Tier 3 standards. We are also proposing to remove obsolete regulatory text and make several minor corrections and clarifications.

Please refer to Section VI for a complete discussion of technical amendments and regulatory streamlining provisions and issues.

C. What would the impacts of the proposed standards be?

The proposed Tier 3 vehicle and fuel standards together would reduce dramatically emissions of NO_X, VOC, $PM_{2.5}$, and air toxics. The gasoline sulfur standards, which would take effect in 2017, would provide large immediate reductions in emissions from existing gasoline vehicles and engines. NO_X emissions would be reduced by about 284,000 tons, or about 8 percent of emissions from on-highway vehicles, in 2017 alone. The emission reductions would increase over time as newer vehicles become a larger percentage of the fleet. In 2030, when 80 percent of the light-duty fleet (and 90 percent of the vehicle miles travelled) consists of Tier 3 vehicles, we expect the NO_X and VOC emissions to be reduced by about 525,000 tons and 226,000 tons, respectively, or one quarter of emissions from on-highway vehicles compared to their 2030 levels without the Tier 3 program. Emissions of CO would decrease by almost 6 million tons, or 30 percent of emissions from on-highway vehicles. Emissions of many air toxics would also be reduced, including benzene, 1,3-butadiene, acetaldehyde, formaldehyde, acrolein and ethanol, with reductions ranging from 10 to nearly 40 percent of national emissions from on-highway vehicles. We expect these reductions to continue beyond 2030 as more of the fleet continues to turn over to Tier 3 vehicles; for example, by 2050, when nearly all of the fleet would have turned over to Tier 3 standards, we estimate the Tier 3 program would reduce on-highway emissions of NO_X and VOC nearly 40 percent from the level of emissions projected without Tier 3 controls.[19]

These reductions in emissions of NO_X, VOC, $PM_{2.5}$ and air toxics from the proposed Tier 3 standards are projected to lead to significant decreases in ambient concentrations of ozone, $PM_{2.5}$ and air toxics (including notable nationwide reductions in benzene concentrations) by 2030, and would immediately reduce ozone in 2017 when the proposed sulfur controls take effect. Additional information on the emission and air quality impacts of the proposed Tier 3 program is presented in Sections III.B and C.

[19] To estimate the benefits of the proposed Tier 3 rule, we perfomed air quality modeling for the year 2030.

Exposure to ambient concentrations of ozone, $PM_{2.5}$, and air toxics is linked to adverse human health impacts such as premature deaths as well as other important public health and environmental effects (see Section II.B). The proposed Tier 3 standards would reduce these adverse impacts and yield significant benefits, including those we can monetize and those we are unable to quantify. We estimate that by 2030, the annual emission reductions of the Tier 3 standards would annually prevent between 670 and 1,700 PM-related premature deaths, between 160 and 710 ozone-related premature deaths, 81,000 work days lost, and approximately 1.4 million minor restricted-activity days. The estimated annual monetized health benefits of the proposed Tier 3 standards in 2030 (2010$) would be between $8.0 and $23 billion, assuming a 3-percent discount rate (or between $7.4 billion and $21 billion assuming a 7-percent discount rate). [20] The proposed fuel standards are projected to cost on average less than one cent per gallon of gasoline, and the proposed light-duty vehicle standards would have an average cost that increases in proportion to the increase in stringency from $50 per vehicle in 2017 to $134 per vehicle when the standards are fully phased in 2025. The annual cost of the overall program in 2030 would be approximately $3.4 billion.[21] The 2030 benefits are 2 to 7 times the costs of the program.

The benefits in Table I–7 include all of the human health impacts we are able to quantify and monetize at this time. However, the full complement of human health and welfare effects associated with PM, ozone and air toxics remain unquantified because of current limitations in methods and/or available data. As a result, the health benefits quantified in this section are likely underestimates of the total benefits attributable to the proposed standards. See Sections VII and VIII for detailed descriptions of the costs and benefits of this proposal.

TABLE I–7—SUMMARY OF ANNUAL BENEFITS AND COSTS ASSOCIATED WITH THE PROPOSED TIER 3 PROGRAM

[Billions, 2010$] [a]

Description	2030
Vehicle Program Costs	$2.1
Fuels Program Costs	1.3
Total Estimated Costs [b]	3.4
Total Estimated Health Benefits [c d e f g]	
3 percent discount rate	$8.0–$23
7 percent discount rate	7.4–21
Annual Net Benefits (Total Benefits—Total Costs):	
3 percent discount rate	4.6–20
7 percent discount rate	4.0–18

[a] All estimates represent annual benefits and costs anticipated for the year 2030. Totals are rounded to two significant digits and may not sum due to rounding.

[b] The calculation of annual costs does not require amortization of costs over time. Therefore, the estimates of annual cost do not include a discount rate or rate of return assumption (see Section VII of the preamble for more information on vehicle and fuel costs). The program costs include the costs associated with the Tier 3 vehicle and fuel standards in all states except California.

[c] The benefits presented in this table have been adjusted to remove benefits of the Tier 3 program in California.

[d] Total includes ozone and $PM_{2.5}$ benefits. Range was developed by adding the estimate from the Bell et al., 2004 ozone premature mortality function to $PM_{2.5}$-related premature mortality derived from the American Cancer Society cohort study (Pope et al., 2002) for the low estimate and ozone premature mortality derived from the Levy et al., 2005 study to $PM_{2.5}$-related premature mortality derived from the Six-Cities (Laden et al., 2006) study for the high estimate.

[e] Annual benefits analysis results reflect the use of a 3 percent and 7 percent discount rate in the valuation of premature mortality and nonfatal myocardial infarctions, consistent with EPA and OMB guidelines for preparing economic analyses.

[f] Valuation of premature mortality based on long-term PM exposure assumes discounting over the SAB recommended 20-year segmented lag structure described in the Regulatory Impact Analysis for the 2006 PM National Ambient Air Quality Standards (September, 2006).

[g] Not all possible benefits are quantified and monetized in this analysis; the total monetized benefits presented here may therefore be underestimated. Potential benefit categories that have not been quantified and monetized, due to current limitations in methods and/or data availability, are listed in Table VIII–2. For example, we have not quantified a number of known or suspected health and welfare effects linked with reductions in ozone and PM (e.g., reductions in heart rate variability, reduced material damage to structures and cultural monuments, and reduced eutrophication in coastal areas). We are also unable to quantify health and welfare benefits associated with reductions in air toxics.

II. Why is EPA making this proposal?

The Clean Air Act authorizes EPA to establish emissions standards for motor vehicles to address air pollution that may reasonably be anticipated to endanger public health or welfare. EPA also has authority to establish fuel controls to address such air pollution. These statutory requirements are described in Section II.A.

Emissions from motor vehicles and their fuels contribute to ambient levels of ozone, PM, NO_2, sulfur dioxide (SO_2) and CO, which are all pollutants for which EPA has established health-based NAAQS. These pollutants are linked with respiratory and/or cardiovascular problems and other adverse health impacts leading to increased medication use, hospital admissions, emergency department visits, and premature mortality. Over 158 million people currently live in areas designated nonattainment for one or more of the current NAAQS.[22]

Motor vehicles also emit air toxics, and the majority of Americans continue to be exposed to ambient concentrations of air toxics at levels which have the potential to cause adverse health effects, including cancer, immune system damage, and neurological, reproductive, developmental, respiratory, and other

[20] These benefits estimates have been adjusted to remove benefits of the Tier 3 program in California. The Tier 3 proposal's analysis assumed emissions reductions and resulting benefits would occur nationwide. California was recently granted a Clean Air Act waiver of preemption for the LEV III vehicle program, and some other states have adopted it. The Tier 3 final rule analysis will account for those emission reductions that will occur even in the absence of Tier 3 vehicle standards, for all states that have adopted LEV III. See Section VIII of the preamble for more information on the benefits associated with the Tier 3 program.

[21] Costs include estimates for the proposed Tier 3 standards in all states except California.

[22] Data come from Summary Nonattainment Area Population Exposure Report, current as of December 14, 2012 at: *http://www.epa.gov/oar/oaqps/greenbk/popexp.html* and contained in Docket EPA–HQ–OAR–2011–0135.

health problems.[23] A more detailed discussion of the health and environmental effects of these pollutants is included in Section II.B.

Cars and light trucks also continue to be a significant contributor to air pollution directly near roads, with gasoline vehicles accounting for more than 50 percent of near-road concentrations of some criteria and toxic pollutants.[24] More than 50 million people live, work, or go to school in close proximity to high-traffic roadways, and the average American spends more than one hour traveling each day, with nearly 90 percent of daily trips occurring by personal vehicle.[25] [26] [27] Exposure to traffic-related pollutants has been linked with adverse health impacts such as respiratory problems (particularly in asthmatic children) and cardiovascular problems.

In the absence of additional controls such as Tier 3 standards, many areas will continue to have ambient ozone and $PM_{2.5}$ concentrations exceeding the NAAQS in the future. States and local areas are required to adopt control measures to attain the NAAQS and, once attained, to demonstrate that control measures are in place sufficient to maintain the NAAQS for ten years (and eight years later, a similar demonstration is required for another ten-year period). The proposed Tier 3 standards would be a critical part of areas' strategies to attain and maintain the standards. Maintaining the standards has been challenging in the past, particularly for areas where high population growth rates lead to significant annual increases in vehicle trips and vehicle miles traveled. Our air quality modeling for this proposal, which is described in more detail in Section III.C, projects that in 2017 a significant number of counties outside CA will be within 10 percent of the 2008 ozone NAAQS, in the absence of additional controls. These counties in particular would benefit from the proposed Tier 3 standards as they work to ensure long-term maintenance of the NAAQS.

Section III provides more detail on how this proposal would reduce motor vehicle emissions and ambient levels of pollution. The proposed rule would meaningfully reduce ozone concentrations as early as 2017 (the first year of the program), and even more significantly in 2030. The reductions are of significant enough magnitude to bring ozone levels in some counties from above the standard to below the standard, even without any additional controls. We also project that the Tier 3 standards would reduce ambient $PM_{2.5}$ concentrations.

Without this proposal to reduce nationwide motor vehicle emissions, areas would have to adopt other measures to reduce emissions from other sources under their state or local authority. Few other measures exist for providing multi-pollutant reductions of the same magnitude and cost-effectiveness as those expected from the proposed Tier 3 standards. Furthermore, states outside California do not have the authority to lower the sulfur in gasoline, which is needed to immediately reduce emissions from the existing fleet and also enable new vehicles to meet the proposed Tier 3 emissions standards throughout their useful life.

The reductions in ambient ozone and $PM_{2.5}$ that would result from the proposed Tier 3 standards would provide significant health benefits. By 2030, the standards would annually prevent between 670 and 1,700 PM-related premature deaths, between 160 and 710 ozone-related premature deaths, 81,000 work days lost, and approximately 1.4 million minor restricted-activity days (see Section VIII for more details). This proposal would also reduce air toxics; for example, we project that in 2030, the proposal would decrease ambient benzene concentrations by 10–25 percent in some urban areas. Furthermore, the proposed Tier 3 standards would reduce traffic-associated pollution near major roads. EPA is proposing Tier 3 vehicle and fuel standards as part of a comprehensive nationwide program for regulating all types of air pollution from motor vehicles. EPA recently finalized standards to reduce GHG emissions from light-duty vehicles, starting with model year 2017.[28] The Tier 3 standards in this proposal, which address non-GHGs, would be implemented on the same timeframe, thus allowing manufacturers to optimize their vehicle redesigns over both sets of standards. Furthermore, the Tier 3 vehicle and fuel standards are also closely aligned with California's LEV III program, in such a way that manufacturers could design a single vehicle for nationwide sales. This reduces the cost of compliance for auto manufacturers.

This Tier 3 proposal responds to the President's request in his May 2010 memorandum for EPA to review the adequacy of its existing non-GHG standards for new motor vehicles and fuels, and to promulgate new standards, if necessary, as part of a comprehensive approach to regulating motor vehicles.[29] Based on our review, we have concluded that improved vehicle technology, combined with lower sulfur gasoline, make it feasible and cost-effective to reduce emissions well below the current Tier 2 levels. These emission reductions are necessary to reduce air pollution that is (and projected to continue to be) at levels that endanger public health and welfare.

A. Basis for Action Under the Clean Air Act

1. Clean Air Act Section 202

We are proposing to set motor vehicle emission standards under the authority of section 202 of the Clean Air Act. Section 202(a) provides EPA with general authority to prescribe vehicle standards, subject to any specific limitations elsewhere in the Act. EPA is also setting standards for larger light-duty trucks and MDPVs under the general authority of section 202(a)(1) and under section 202(a)(3), which requires that standards applicable to emissions of hydrocarbons, NO_X, CO and PM from heavy-duty vehicles[30] reflect the greatest degree of emission reduction available for the model year to which such standards apply, giving appropriate consideration to cost, energy, and safety. In addition, section 202(k) provides EPA with authority to issue and revise regulations applicable to evaporative emissions of hydrocarbons from all gasoline-fueled motor vehicles during: (1) Operation, and (2) over 2 or more days of nonuse;

[23] U.S. EPA. (2011) Summary of Results for the 2005 National-Scale Assessment. *www.epa.gov/ttn/atw/nata2005/05pdf/sum_results.pdf.*

[24] For example, see Fujita, E.M; Campbell, D.E.; Zielinska, B.; Arnott, W.P.; Chow, J.C. (2011) Concentrations of Air Toxics in Motor Vehicle-Dominated Environments. Health Effects Institute Research Report 156. Available at *http://www.healtheffects.org.*

[25] U.S. Census Bureau (2011). Current Housing Reports, Series H150/09, American Housing Survey for the United States: 2009. U.S. Government Printing Office, Washington, DC. Available at *http://www.census.gov/hhes/www/housing/ahs/ahs09/ahs09.html.*

[26] Drago, R.(2011). Secondary activities in the 2006 American Time Use Survey. U.S. Bureau of Labor Statistics Working Paper 446. Available at *http://www.bls.gov.*

[27] U.S. Department of Transportation, Bureau of Transportation Statistics. (2003) National Household Travel Survey 2001 Highlights Report. Government Printing Office, Washington, DC. Available at *http://www.bts.gov/publications/highlights_of_the_2001_national_household_travel_survey/.*

[28] 77 FR 62623 (October 15, 2012).

[29] The Presidential Memorandum is found at: *http://www.whitehouse.gov/the-press-office/presidential-memorandum-regarding-fuel-efficiency-standards.*

[30] LDTs that have gross vehicle weight ratings above 6000 lbs are considered ''heavy-duty vehicles'' under the CAA. See section 202(b)(3)(C). For regulatory purposes, we refer to those LDTs at or below 8500 lbs GVWR as ''heavy light-duty trucks'' made up of LDT3s and LDT4s.

under ozone-prone summertime conditions. Regulations under section 202(k) shall take effect as expeditiously as possible and shall require the greatest degree of emission reduction achievable by means reasonably expected to be available for production during any model year to which the regulations apply, giving appropriate consideration to fuel volatility, and to cost, energy, and safety factors associated with the application of the appropriate technology. Further, section 206 and in particular section 206(d) of the Clean Air Act authorizes EPA to establish methods and procedures for testing whether a motor vehicle or motor vehicle engine conforms with section 202 requirements.

2. Clean Air Act Section 211

We are proposing to adopt gasoline sulfur controls pursuant to our authority under section 211(c)(1) of the CAA. This section allows EPA to establish a fuel control if at least one of the following two criteria is met: (1) The emission products of the fuel cause or contribute to air pollution which may reasonably be anticipated to endanger public health or welfare; or (2) the emission products of the fuel will impair to a significant degree the performance of any emissions control device or system which is either in general use or which the Administrator finds has been developed to a point where in a reasonable time it will be in general use were the fuel control to be adopted. We are proposing gasoline sulfur controls based on both of these criteria. Under the first criterion, we believe that gasoline with current levels of sulfur contributes to ambient levels of air pollution that endanger public health and welfare, as described in Section II.B. Under the second criterion, we believe that gasoline sulfur impairs the emissions control systems of vehicles, as discussed in Section III.A.2.

B. Overview of Public Health Impacts of Motor Vehicles and Fuels

Motor vehicles emit pollutants that contribute to ambient levels of ozone, PM, NO_2, SO_2, CO, and air toxics. Motor vehicles are significant contributors to emissions of VOC and NO_X, which contribute to the formation of both ozone and $PM_{2.5}$. Approximately 159 million people currently live in counties designated nonattainment for one or more of the NAAQS, and this figure does not include the people living in areas with a risk of exceeding the NAAQS in the future.[31] The majority of Americans continue to be exposed to ambient concentrations of air toxics at levels which have the potential to cause adverse health effects.[32] In addition, populations who live, work, or attend school near major roads experience elevated exposure concentrations to a wide range of air pollutants.[33]

EPA has already adopted many emission control programs that are expected to reduce ambient pollution levels. As a result of these programs, the number of areas that continue to violate the ozone and $PM_{2.5}$ NAAQS or have high levels of air toxics is expected to continue to decrease. However, the baseline air quality modeling completed for this proposed rule predicts that without additional controls there will continue to be a need for reductions in ozone, $PM_{2.5}$ and air toxics concentrations in the future. Section III.C of this preamble presents the air quality modeling results for this proposed rule.

1. Ozone

a. Background

Ground-level ozone pollution is typically formed through reactions involving VOC and NO_X in the lower atmosphere in the presence of sunlight. These pollutants, often referred to as ozone precursors, are emitted by many types of pollution sources, such as highway and nonroad motor vehicles and engines, power plants, chemical plants, refineries, makers of consumer and commercial products, industrial facilities, and smaller area sources.

The science of ozone formation, transport, and accumulation is complex. Ground-level ozone is produced and destroyed in a cyclical set of chemical reactions, many of which are sensitive to temperature and sunlight. When ambient temperatures and sunlight levels remain high for several days and the air is relatively stagnant, ozone and its precursors can build up and result in more ozone than typically occurs on a single high-temperature day. Ozone and its precursors can be transported hundreds of miles downwind from precursor emissions, resulting in elevated ozone levels even in areas with low local VOC or NO_X emissions.

b. Health Effects of Ozone

The health and welfare effects of ozone are well documented and are assessed in EPA's 2006 Air Quality Criteria Document and 2007 Staff Paper.[34 35] People who are more susceptible to effects associated with exposure to ozone can include children, the elderly, and individuals with respiratory disease such as asthma. Those with greater exposures to ozone, for instance due to time spent outdoors (e.g., children and outdoor workers), are of particular concern. Ozone can irritate the respiratory system, causing coughing, throat irritation, and breathing discomfort. Ozone can reduce lung function and cause pulmonary inflammation in healthy individuals. Ozone can also aggravate asthma, leading to more asthma attacks that require medical attention and/or the use of additional medication. Thus, ambient ozone may cause both healthy and asthmatic individuals to limit their outdoor activities. In addition, there is suggestive evidence of a contribution of ozone to cardiovascular-related morbidity and highly suggestive evidence that short-term ozone exposure directly or indirectly contributes to non-accidental and cardiopulmonary-related mortality, but additional research is needed to clarify the underlying mechanisms causing these effects. In a report on the estimation of ozone-related premature mortality published by the National Research Council (NRC), a panel of experts and reviewers concluded that short-term exposure to ambient ozone is likely to contribute to premature deaths and that ozone-related mortality should be included in estimates of the health benefits of reducing ozone exposure.[36] Animal toxicological evidence indicates that with repeated exposure, ozone can inflame and damage the lining of the lungs, which may lead to permanent changes in lung tissue and irreversible reductions in lung function. The respiratory effects observed in controlled human exposure studies and animal studies are coherent with the evidence from epidemiologic studies supporting a causal relationship between acute ambient ozone exposures

[31] Data come from Summary Nonattainment Area Population Exposure Report, current as of July 20, 2012 at: *http://www.epa.gov/oar/oaqps/greenbk/popexp.html* and contained in Docket EPA–HQ–OAR–2011–0135.

[32] U.S. EPA. (2011) Summary of Results for the 2005 National-Scale Assessment. *www.epa.gov/ttn/atw/nata2005/05pdf/sum_results.pdf.*

[33] Health Effects Institute Panel on the Health Effects of Traffic-Related Air Pollution. (2010) Traffic-related air pollution: a critical review of the literature on emissions, exposure, and health effects. HEI Special Report 17. Available at *http://www.healtheffects.org*].

[34] U.S. EPA. (2006). Air Quality Criteria for Ozone and Related Photochemical Oxidants (Final). EPA/600/R–05/004aF–cF. Washington, DC: U.S. EPA.

[35] U.S. EPA. (2007). Review of the National Ambient Air Quality Standards for Ozone: Policy Assessment of Scientific and Technical Information, OAQPS Staff Paper. EPA–452/R–07–003. Washington, DC, U.S. EPA.

[36] National Research Council. (2008). *Estimating Mortality Risk Reduction and Economic Benefits from Controlling Ozone Air Pollution.* The National Academies Press: Washington, DC.

and increased respiratory-related emergency room visits and hospitalizations in the warm season. In addition, there is suggestive evidence of a contribution of ozone to cardiovascular-related morbidity and non-accidental and cardiopulmonary mortality.

c. Current and Projected Ozone Levels

Concentrations that exceed the level of the ozone NAAQS occur in many parts of the country, including many major population centers. In addition, our modeling without the proposed Tier 3 controls projects that in the future we will continue to have many areas that will have ambient ozone concentrations above the level of the NAAQS (see Section III.C.1). States will need to meet the standard in the 2015–2032 timeframe. The emission reductions and significant ambient ozone improvements from this proposed rule, which would take effect starting in 2017, would be helpful to states as they work to attain and maintain the ozone NAAQS.

The primary and secondary NAAQS for ozone are 8-hour standards with a level of 0.075 ppm. The most recent revision to the ozone standards was in 2008; the previous 8-hour ozone standards, set in 1997, had a level of 0.08 ppm. In 2004, the U.S. EPA designated nonattainment areas for the 1997 8-hour ozone NAAQS.[37] [38] As of December 14, 2012, there were 41 ozone nonattainment areas for the 1997 ozone NAAQS composed of 221 full or partial counties with a total population of over 118 million. Nonattainment designations for the 2008 ozone standard were finalized on April 30, 2012 and May 31, 2012.[39] These designations include 46 areas, composed of 227 full or partial counties, with a population of over 123 million. As of December 14, 2012, over 138 million people are living in ozone nonattainment areas.[40]

States with ozone nonattainment areas are required to take action to bring those areas into attainment. The attainment date assigned to an ozone nonattainment area is based on the area's classification. Most ozone nonattainment areas are required to attain the 1997 8-hour ozone NAAQS in the 2007 to 2013 time frame and then to maintain it thereafter.[41] The attainment dates for areas designated nonattainment for the 2008 8-hour ozone NAAQS are in the 2015 to 2032 timeframe, depending on the severity of the problem in each area. In addition, EPA is working to complete the current review of the ozone NAAQS by mid-2014. If EPA revises the ozone standards in 2014 pursuant to that review, the attainment dates associated with areas designated nonattainment for that NAAQS would likely be in the 2019 to 2036 timeframe, depending on the severity of the problem in each area.

EPA has already adopted many emission control programs that are expected to reduce ambient ozone levels. As a result of these and other federal, state and local programs, 8-hour ozone levels are expected to improve in the future. However, even with the implementation of all current state and federal regulations, there are projected to be counties violating the ozone NAAQS well into the future. Thus additional federal control programs, such as Tier 3, can assist areas with attainment dates in 2017 and beyond in attaining the NAAQS as expeditiously as practicable and may relieve areas with already stringent local regulations from some of the burden associated with adopting additional local controls.

2. Particulate Matter

a. Background

Particulate matter is a highly complex mixture of solid particles and liquid droplets distributed among numerous atmospheric gases which interact with solid and liquid phases. Particles range in size from those smaller than 1 nanometer (10^{-9} meter) to over 100 micrometer (μm, or 10^{-6} meter) in diameter (for reference, a typical strand of human hair is 70 μm in diameter and a grain of salt is about 100 μm). Atmospheric particles can be grouped into several classes according to their aerodynamic and physical sizes, including ultrafine particles (<0.1 μm), accumulation mode or 'fine' particles (< 1 to 3 μm), and coarse particles (>1 to 3 μm). For regulatory purposes, fine particles are measured as $PM_{2.5}$ and inhalable or thoracic coarse particles are measured as $PM_{10-2.5}$, corresponding to their size (diameter) range in micrometers and referring to total particle mass under 2.5 and between 2.5 and 10 micrometers, respectively. The EPA currently has standards that measure $PM_{2.5}$ and PM_{10}.[42]

Particles span many sizes and shapes and consist of hundreds of different chemicals. Particles are emitted directly from sources and are also formed through atmospheric chemical reactions; the former are often referred to as ''primary'' particles, and the latter as ''secondary'' particles. Particle pollution also varies by time of year and location and is affected by several weather-related factors, such as temperature, clouds, humidity, and wind. A further layer of complexity comes from particles' ability to shift between solid/liquid and gaseous phases, which is influenced by concentration and meteorology, especially temperature.

Fine particles are produced primarily by combustion processes and by transformations of gaseous emissions (e.g., sulfur oxides (SO_X), nitrogen oxides (NO_X), and volatile organic compounds (VOC)) in the atmosphere. The chemical and physical properties of $PM_{2.5}$ may vary greatly with time, region, meteorology, and source category. Thus, $PM_{2.5}$ may include a complex mixture of different components including sulfates, nitrates, organic compounds, elemental carbon and metal compounds. These particles can remain in the atmosphere for days to weeks and travel hundreds to thousands of kilometers.

b. Health Effects of PM

Scientific studies show ambient PM is associated with a series of adverse health effects. These health effects are discussed in detail in EPA's Integrated Science Assessment (ISA) for Particulate Matter.[43] Further discussion of health effects associated with PM can also be found in the draft RIA. The ISA summarizes health effects evidence associated with both short-term and long-term exposures to $PM_{2.5}$, $PM_{10-2.5}$, and ultrafine particles.

The ISA concludes that health effects associated with short-term exposures (hours to days) to ambient $PM_{2.5}$ include mortality, cardiovascular effects, such as

[37] 69 FR 23858 (April 30, 2004).

[38] A nonattainment area is defined in the Clean Air Act (CAA) as an area that is violating an ambient standard or is contributing to a nearby area that is violating the standard.

[39] 77FR 30088 (May 21, 2012).

[40] The 138 million total is calculated by summing, without double counting, the 1997 and 2008 ozone nonattainment populations contained in the Summary Nonattainment Area Population Exposure report (*http://www.epa.gov/oar/oaqps/greenbk/popexp.html*). If there is a population associated with both the 1997 and 2008 nonattainment areas, and they are not the same, then the larger of the two populations is included in the sum.

[41] The Los Angeles South Coast Air Basin 8-hour ozone nonattainment area and the San Joaquin Valley Air Basin 8-hour ozone nonattainment area are designated as extreme and will have to attain before June 15, 2024. The Sacramento, Coachella Valley, Western Mojave and Houston 8-hour ozone nonattainment areas are designated as severe and will have to attain by June 15, 2019.

[42] Regulatory definitions of PM size fractions, and information on reference and equivalent methods for measuring PM in ambient air, are provided in 40 CFR parts 50, 53, and 58.

[43] U.S. EPA. (2009). Integrated Science Assessment for Particulate Matter (Final Report). U.S. Environmental Protection Agency, Washington, DC, EPA/600/R–08/139F.

altered vasomotor function and myocardial ischemia, and hospital admissions and emergency department visits for ischemic heart disease and congestive heart failure, and respiratory effects, such as exacerbation of asthma symptoms in children and hospital admissions and emergency department visits for chronic obstructive pulmonary disease and respiratory infections.[44] The ISA notes that long-term exposure (months to years) to $PM_{2.5}$ is associated with the development/progression of cardiovascular disease, premature mortality, and respiratory effects, including reduced lung function growth in children, increased respiratory symptoms, and asthma development.[45] The ISA concludes that the currently available scientific evidence from epidemiologic, controlled human exposure, and toxicological studies supports a causal association between short- and long-term exposures to $PM_{2.5}$ and cardiovascular effects and premature mortality. Furthermore, the ISA concludes that the collective evidence supports likely causal associations between short- and long-term $PM_{2.5}$ exposures and respiratory effects. The ISA also concludes that the scientific evidence is suggestive of a causal association for reproductive and developmental effects including respiratory-related infant mortality, and cancer, mutagenicity, and genotoxicity and long-term exposure to $PM_{2.5}$.[46]

For $PM_{10-2.5}$, the ISA concludes that the current evidence is suggestive of a causal relationship between short-term exposures and premature mortality, cardiovascular effects, and respiratory effects. Data are inadequate to draw conclusions regarding the health effects associated with long-term exposure to $PM_{10-2.5}$.[47]

For ultrafine particles, the ISA concludes that there is suggestive evidence of a causal relationship between short-term exposures and cardiovascular effects, such as changes in heart rhythm and blood vessel function. It also concludes that there is suggestive evidence of association between short-term exposure to ultrafine particles and respiratory effects. Data are inadequate to draw conclusions regarding the health effects associated with long-term exposure to ultrafine particles.[48]

c. Current and Projected $PM_{2.5}$ Levels

There are many areas of the country that are currently in nonattainment for the annual and 24-hour $PM_{2.5}$ NAAQS. Our modeling without the proposed Tier 3 controls projects that in the future we will continue to have many areas that will have ambient $PM_{2.5}$ concentrations above the level of the NAAQS (see Section III.C.2). States will need to meet the 24-hour standard in the 2015–2019 timeframe and the annual standard in the 2021–2025 timeframe. The emission reductions and improvements in ambient $PM_{2.5}$ from this proposed rule, which would take effect starting in 2017, would be helpful to states as they work to attain and maintain the $PM_{2.5}$ NAAQS.

There are two NAAQS for $PM_{2.5}$: an annual standard (12 micrograms per cubic meter ($\mu g/m^3$)) and a 24-hour standard (35 $\mu g/m^3$). The most recent revisions to these standards were in 1997, 2006 and in December 2012. The December 2012 rule revised the level of the annual $PM_{2.5}$ standard from 15 $\mu g/m^3$ to 12 $\mu g/m^3$.[49]

In 2005 EPA designated nonattainment areas for the 1997 $PM_{2.5}$ NAAQS.[50] As of December 14, 2012, over 91 million people lived in the 35 areas that are designated as nonattainment for the 1997 $PM_{2.5}$ NAAQS. These $PM_{2.5}$ nonattainment areas are comprised of 191 full or partial counties. On October 8, 2009, the EPA issued final nonattainment area designations for the 2006 24-hour $PM_{2.5}$ NAAQS.[51] These designations include 32 areas composed of 121 full or partial counties with a population of over 70 million. In total, there are 50 $PM_{2.5}$ nonattainment areas with a population of over 105 million people.[52]

States with $PM_{2.5}$ nonattainment areas will be required to take action to bring those areas into attainment in the future. Most 1997 $PM_{2.5}$ nonattainment areas are required to attain the 1997 $PM_{2.5}$ NAAQS in the 2010 to 2015 time frame and then required to maintain the 1997 $PM_{2.5}$ NAAQS thereafter.[53] The 2006 24-hour $PM_{2.5}$ nonattainment areas will be required to attain the 2006 24-hour $PM_{2.5}$ NAAQS in the 2014 to 2019 time frame and then be required to maintain the 2006 24-hour $PM_{2.5}$ NAAQS thereafter.[54] The 2012 $PM_{2.5}$ nonattainment areas will likely be required to attain the 2012 $PM_{2.5}$ NAAQS in the 2020 to 2025 time frame, depending on the severity of an area's fine particle pollution problems and the availability of pollution controls. The standards proposed here begin taking effect in 2017.

EPA has already adopted many mobile source emission control programs that are expected to reduce ambient PM levels. As a result of these and other federal, state and local programs, the number of areas that fail to meet the $PM_{2.5}$ NAAQS in the future is expected to decrease. However, even with the implementation of all current state and federal regulations, there are projected to be counties violating the $PM_{2.5}$ NAAQS well into the future. Thus additional federal control programs, such as Tier 3, can assist areas with attainment dates in 2017 and beyond in attaining the NAAQS as expeditiously as practicable and may relieve areas with already stringent local regulations from some of the burden associated with adopting additional local controls.

3. Nitrogen Oxides and Sulfur Oxides

a. Background

Nitrogen dioxide (NO_2) is a member of the NO_X family of gases. Most NO_2 is formed in the air through the oxidation of nitric oxide (NO) emitted when fuel is burned at a high temperature. Sulfur dioxide (SO_2), a member of the sulfur oxide (SO_X) family of gases, is formed from burning fuels containing sulfur (e.g., coal or oil derived), extracting gasoline from oil, or extracting metals from ore.

SO_2 and NO_2 and their gas phase oxidation products can dissolve in water droplets and further oxidize to form sulfuric and nitric acid which react with ammonia to form sulfates and

[44] U.S. EPA. (2009). Integrated Science Assessment for Particulate Matter (Final Report). U.S. Environmental Protection Agency, Washington, DC, EPA/600/R–08/139F. Section 2.3.1.1.

[45] U.S. EPA. (2009). Integrated Science Assessment for Particulate Matter (Final Report). U.S. Environmental Protection Agency, Washington, DC, EPA/600/R–08/139F. page 2–12, Sections 7.3.1.1 and 7.3.2.1.

[46] U.S. EPA. (2009). Integrated Science Assessment for Particulate Matter (Final Report). U.S. Environmental Protection Agency, Washington, DC, EPA/600/R–08/139F. Section 2.3.2.

[47] U.S. EPA. (2009). Integrated Science Assessment for Particulate Matter (Final Report). U.S. Environmental Protection Agency, Washington, DC, EPA/600/R–08/139F. Section 2.3.4 and Table 2–6.

[48] U.S. EPA. (2009). Integrated Science Assessment for Particulate Matter (Final Report). U.S. Environmental Protection Agency, Washington, DC, EPA/600/R–08/139F. Section 2.3.5 and Table 2–6.

[49] U.S. EPA (2012). National Ambient Air Quality Standards for Particulate Matter. *http://www.epa.gov/PM/2012/finalrule.pdf.*

[50] 70 FR 19844 (April 14, 2005).

[51] 74 FR 58688 (November 13, 2009).

[52] Data come from Summary Nonattainment Area Population Exposure Report, current as of December 14, 2012 at: *http://www.epa.gov/oar/oaqps/greenbk/popexp.html* and contained in Docket EPA–HQ–OAR–2011–0135.

[53] U.S. EPA. (2007). $PM_{2.5}$ National Ambient Air Quality Standard Implementation Rule (Final). Washington, DC: U.S. EPA. 72 FR 20586, April 25, 2007.

[54] U.S. EPA. (2011). PM Standards Revision—2006: Timeline. Available at *http://www.epa.gov/PM/naaqsrev2006.html#timeline.* Accessed December 31, 2011.

nitrates, both of which are important components of ambient PM. The health effects of ambient PM are discussed in Section II.B.2.b of this preamble. NO_X and VOC are the two major precursors of ozone. The health effects of ozone are covered in Section II.B.2.1.b.

b. Health Effects of NO_2

Information on the health effects of NO_2 can be found in the EPA Integrated Science Assessment (ISA) for Nitrogen Oxides.[55] The EPA has concluded that the findings of epidemiologic, controlled human exposure, and animal toxicological studies provide evidence that is sufficient to infer a likely causal relationship between respiratory effects and short-term NO_2 exposure. The ISA concludes that the strongest evidence for such a relationship comes from epidemiologic studies of respiratory effects including symptoms, emergency department visits, and hospital admissions. Based on both short- and long-term studies, the ISA concludes that associations of NO_2 with respiratory health effects are stronger among a number of groups; these include individuals with preexisting pulmonary conditions (e.g., asthma or COPD), children and older adults. The ISA also draws two broad conclusions regarding airway responsiveness following NO_2 exposure. First, the ISA concludes that NO_2 exposure may enhance the sensitivity to allergen-induced decrements in lung function and increase the allergen-induced airway inflammatory response following 30-minute exposures of asthmatics to NO_2 concentrations as low as 0.26 ppm. Second, exposure to NO_2 has been found to enhance the inherent responsiveness of the airway to subsequent nonspecific challenges in controlled human exposure studies of asthmatic subjects. Small but significant increases in non-specific airway hyperresponsiveness were reported following 1-hour exposures of asthmatics to 0.1 ppm NO_2. Enhanced airway responsiveness could have important clinical implications for asthmatics since transient increases in airway responsiveness following NO_2 exposure have the potential to increase symptoms and worsen asthma control. Together, the epidemiologic and experimental data sets form a plausible, consistent, and coherent description of a relationship between NO_2 exposures and an array of adverse health effects that range from the onset of respiratory symptoms to hospital admission.

Although the weight of evidence supporting a causal relationship is somewhat less certain than that associated with respiratory morbidity, NO_2 has also been linked to other health endpoints. These include all-cause (nonaccidental) mortality, hospital admissions or emergency department visits for cardiovascular disease, and decrements in lung function growth associated with chronic exposure.

c. Health Effects of SO_2

Information on the health effects of SO_2 can be found in the EPA Integrated Science Assessment for Sulfur Oxides.[56] SO_2 has long been known to cause adverse respiratory health effects, particularly among individuals with asthma. Other potentially sensitive groups include children and the elderly. During periods of elevated ventilation, asthmatics may experience symptomatic bronchoconstriction within minutes of exposure. Following an extensive evaluation of health evidence from epidemiologic and laboratory studies, the EPA has concluded that there is a causal relationship between respiratory health effects and short-term exposure to SO_2. Separately, based on an evaluation of the epidemiologic evidence of associations between short-term exposure to SO_2 and mortality, the EPA has concluded that the overall evidence is suggestive of a causal relationship between short-term exposure to SO_2 and mortality.

d. Current Levels of NO_2

Between 2003 and 2005, national mean concentrations of NO_2 were about 15 parts per billion (ppb) for averaging periods ranging from a day to a year.[57] There are two NAAQS for NO_2: an annual standard (53 ppb) and a 1-hour standard (100 ppb). The primary NAAQS for NO_2 was revised in January 2010. EPA completed area designations in January 2012 and there are currently no nonattainment areas. The designations were based on the existing community-wide monitoring network. Once the expanded network of NO_2 monitors is fully deployed and three years of air quality data have been collected, EPA intends to redesignate areas, as appropriate, based on the air quality data from the new monitoring network.[58] [59]

4. Carbon Monoxide

Carbon monoxide (CO) is a colorless, odorless gas emitted from combustion processes. Nationally and, particularly in urban areas, the majority of CO emissions to ambient air come from mobile sources.

a. Health Effects of Carbon Monoxide

Information on the health effects of CO can be found in the EPA Integrated Science Assessment (ISA) for Carbon Monoxide.[60] The ISA concludes that ambient concentrations of CO are associated with a number of adverse health effects.[61] This section provides a summary of the health effects associated with exposure to ambient concentrations of CO.[62]

Human clinical studies of subjects with coronary artery disease show a decrease in the time to onset of exercise-induced angina (chest pain) and electrocardiogram changes following CO exposure. In addition, epidemiologic studies show associations between short-term CO exposure and cardiovascular morbidity, particularly increased emergency room visits and hospital admissions for coronary heart disease (including ischemic heart disease, myocardial infarction, and angina). Some epidemiologic evidence is also available for increased hospital admissions and emergency room visits for congestive heart failure and cardiovascular disease as a whole. The ISA concludes that a causal relationship is likely to exist between short-term exposures to CO and cardiovascular

[55] U.S. EPA (2008). *Integrated Science Assessment for Oxides of Nitrogen—Health Criteria (Final Report).* EPA/600/R–08/071. Washington, DC: U.S.EPA.

[56] U.S. EPA. (2008). *Integrated Science Assessment (ISA) for Sulfur Oxides—Health Criteria (Final Report).* EPA/600/R–08/047F. Washington, DC: U.S. Environmental Protection Agency.

[57] U.S. EPA. (2010). Final Regulatory Impact Analysis (RIA) for the NO_2 National Ambient Air Quality Standards (NAAQS). *http://www.epa.gov/ttn/ecas/regdata/RIAs/FinalNO2RIAfulldocument.pdf.*

[58] U.S. EPA. (2012). Fact Sheet—Air Quality Designations for the 2010 Primary Nitrogen Dioxide (NO_2) National Ambient Air Quality Standards. *http://www.epa.gov/airquality/nitrogenoxides/designations/pdfs/20120120FS.pdf.*

[59] U.S. Environmental Protection Agency (2013). Revision to Ambient Nitrogen Dioxide Monitoring Requirements. March 7, 2013. *http://www.epa.gov/airquality/nitrogenoxides/pdfs/20130307fr.pdf.*

[60] U.S. EPA, (2010). Integrated Science Assessment for Carbon Monoxide (Final Report). U.S. Environmental Protection Agency, Washington, DC, EPA/600/R–09/019F, 2010. Available at *http://cfpub.epa.gov/ncea/cfm/recordisplay.cfm?deid=218686.*

[61] The ISA evaluates the health evidence associated with different health effects, assigning one of five ''weight of evidence'' determinations: causal relationship, likely to be a causal relationship, suggestive of a causal relationship, inadequate to infer a causal relationship, and not likely to be a causal relationship. For definitions of these levels of evidence, please refer to Section 1.6 of the ISA.

[62] Personal exposure includes contributions from many sources, and in many different environments. Total personal exposure to CO includes both ambient and nonambient components; and both components may contribute to adverse health effects.

morbidity. It also concludes that available data are inadequate to conclude that a causal relationship exists between long-term exposures to CO and cardiovascular morbidity.

Animal studies show various neurological effects with in-utero CO exposure. Controlled human exposure studies report inconsistent neural and behavioral effects following low-level CO exposures. The ISA concludes the evidence is suggestive of a causal relationship with both short- and long-term exposure to CO and central nervous system effects.

A number of epidemiologic and animal toxicological studies cited in the ISA have evaluated associations between CO exposure and birth outcomes such as preterm birth or cardiac birth defects. The epidemiologic studies provide limited evidence of a CO-induced effect on preterm births and birth defects, with weak evidence for a decrease in birth weight. Animal toxicological studies have found associations between perinatal CO exposure and decrements in birth weight, as well as other developmental outcomes. The ISA concludes these studies are suggestive of a causal relationship between long-term exposures to CO and developmental effects and birth outcomes.

Epidemiologic studies provide evidence of effects on respiratory morbidity such as changes in pulmonary function, respiratory symptoms, and hospital admissions associated with ambient CO concentrations. A limited number of epidemiologic studies considered copollutants such as ozone, SO_2, and PM in two-pollutant models and found that CO risk estimates were generally robust, although this limited evidence makes it difficult to disentangle effects attributed to CO itself from those of the larger complex air pollution mixture. Controlled human exposure studies have not extensively evaluated the effect of CO on respiratory morbidity. Animal studies at levels of 50–100 ppm CO show preliminary evidence of altered pulmonary vascular remodeling and oxidative injury. The ISA concludes that the evidence is suggestive of a causal relationship between short-term CO exposure and respiratory morbidity, and inadequate to conclude that a causal relationship exists between long-term exposure and respiratory morbidity.

Finally, the ISA concludes that the epidemiologic evidence is suggestive of a causal relationship between short-term exposures to CO and mortality. Epidemiologic studies provide evidence of an association between short-term exposure to CO and mortality, but limited evidence is available to evaluate cause-specific mortality outcomes associated with CO exposure. In addition, the attenuation of CO risk estimates which was often observed in copollutant models contributes to the uncertainty as to whether CO is acting alone or as an indicator for other combustion-related pollutants. The ISA also concludes that there is not likely to be a causal relationship between relevant long-term exposures to CO and mortality.

5. Mobile Source Air Toxics

Light-duty vehicle emissions contribute to ambient levels of air toxics known or suspected as human or animal carcinogens, or that have noncancer health effects. The population experiences an elevated risk of cancer and other noncancer health effects from exposure to the class of pollutants known collectively as ''air toxics.'' [63] These compounds include, but are not limited to, benzene, 1,3-butadiene, formaldehyde, acetaldehyde, acrolein, polycyclic organic matter, and naphthalene. These compounds were identified as national or regional risk drivers or contributors in the 2005 National-scale Air Toxics Assessment and have significant inventory contributions from mobile sources.[64]

a. Health Effects of Air Toxics

i. Benzene

The EPA's IRIS database lists benzene as a known human carcinogen (causing leukemia) by all routes of exposure, and concludes that exposure is associated with additional health effects, including genetic changes in both humans and animals and increased proliferation of bone marrow cells in mice.[65 66 67] EPA states in its IRIS database that data indicate a causal relationship between benzene exposure and acute lymphocytic leukemia and suggest a relationship between benzene exposure and chronic non-lymphocytic leukemia and chronic lymphocytic leukemia. EPA's IRIS documentation for benzene also lists a range of 2.2×10^{-6} to 7.8×10^{-6} as the unit risk estimate (URE) for benzene.[68 69] The International Agency for Research on Carcinogens (IARC) has determined that benzene is a human carcinogen and the U.S. Department of Health and Human Services (DHHS) has characterized benzene as a known human carcinogen.[70 71]

A number of adverse noncancer health effects including blood disorders, such as preleukemia and aplastic anemia, have also been associated with long-term exposure to benzene.[72 73] The most sensitive noncancer effect observed in humans, based on current data, is the depression of the absolute lymphocyte count in blood.[74 75] EPA's inhalation reference concentration (RfC) for benzene is 30 $\mu g/m^3$. The RfC is based on suppressed absolute lymphocyte counts seen in humans under occupational exposure conditions. In addition, recent work, including studies sponsored by the Health Effects Institute (HEI), provides evidence that biochemical responses are occurring at lower levels of benzene exposure than previously known.[76 77 78 79] EPA's IRIS program has

[63] U.S. EPA. (2011) Summary of Results for the 2005 National-Scale Assessment. *www.epa.gov/ttn/atw/nata2005/05pdf/sum_results.pdf.*

[64] U.S. EPA (2011) 2005 National-Scale Air Toxics Assessment. *http://www.epa.gov/ttn/atw/nata2005.*

[65] U.S. EPA. (2000). Integrated Risk Information System File for Benzene. This material is available electronically at: *http://www.epa.gov/iris/subst/0276.htm.*

[66] International Agency for Research on Cancer, IARC monographs on the evaluation of carcinogenic risk of chemicals to humans, Volume 29, Some industrial chemicals and dyestuffs, International Agency for Research on Cancer, World Health Organization, Lyon, France 1982.

[67] Irons, R.D.; Stillman, W.S.; Colagiovanni, D.B.; Henry, V.A. (1992). Synergistic action of the benzene metabolite hydroquinone on myelopoietic stimulating activity of granulocyte/macrophage colony-stimulating factor in vitro, Proc. Natl. Acad. Sci. 89:3691–3695.

[68] A unit risk estimate is defined as the increase in the lifetime risk of an individual who is exposed for a lifetime to 1 μg/m3 benzene in air.

[69] U.S. EPA. (2000). Integrated Risk Information System File for Benzene. This material is available electronically at: *http://www.epa.gov/iris/subst/0276.htm.*

[70] International Agency for Research on Cancer (IARC). (1987). Monographs on the evaluation of carcinogenic risk of chemicals to humans, Volume 29, Supplement 7, Some industrial chemicals and dyestuffs, World Health Organization, Lyon, France.

[71] U.S. Department of Health and Human Services National Toxicology Program. (2011). 12th Report on Carcinogens. Available at: *http://ntp.niehs.nih.gov/?objectid=03C9AF75-E1BF-FF40-DBA9EC0928DF8B15.*

[72] Aksoy, M. (1989). Hematotoxicity and carcinogenicity of benzene. Environ. Health Perspect. 82: 193–197.

[73] Goldstein, B.D. (1988). Benzene toxicity. Occupational medicine. State of the Art Reviews. 3: 541–554.

[74] Rothman, N., G.L. Li, M. Dosemeci, W.E. Bechtold, G.E. Marti, Y.Z. Wang, M. Linet, L.Q. Xi, W. Lu, M.T. Smith, N. Titenko-Holland, L.P. Zhang, W. Blot, S.N. Yin, and R.B. Hayes. (1996). Hematotoxicity among Chinese workers heavily exposed to benzene. Am. J. Ind. Med. 29: 236–246.

[75] U.S. EPA. (2002). Toxicological Review of Benzene (Noncancer Effects). Environmental Protection Agency, Integrated Risk Information System (IRIS), Research and Development, National Center for Environmental Assessment, Washington DC. This material is available electronically at *http://www.epa.gov/iris/subst/0276.htm.*

[76] Qu, O.; Shore, R.; Li, G.; Jin, X.; Chen, C.L.; Cohen, B.; Melikian, A.; Eastmond, D.; Rappaport, S.; Li, H.; Rupa, D.; Suramaya, R.; Songnian, W.; Huifant, Y.; Meng, M.; Winnik, M.; Kwok, E.; Li, Y.;

Continued

not yet evaluated these new data. EPA does not currently have an acute reference concentration for benzene. The Agency for Toxic Substances and Disease Registry (ATSDR) Minimal Risk Level (MRL) for acute exposure to benzene is 29 μg/m^3 for 1–14 days exposure.[80 81]

ii. Formaldehyde

In 1991, EPA concluded that formaldehyde is a carcinogen based on nasal tumors in animal bioassays.[82] An Inhalation Unit Risk for cancer and a Reference Dose for oral noncancer effects were developed by the Agency and posted on the Integrated Risk Information System (IRIS) database. Since that time, the National Toxicology Program (NTP) and International Agency for Research on Cancer (IARC) have concluded that formaldehyde is a known human carcinogen.[83 84 85]

The conclusions by IARC and NTP reflect the results of epidemiologic research published since 1991 in combination with previous animal, human and mechanistic evidence. Research conducted by the National Cancer Institute reported an increased risk of nasopharyngeal cancer and specific lymphohematopoietic malignancies among workers exposed to formaldehyde.[86 87 88] A National Institute of Occupational Safety and Health study of garment workers also reported increased risk of death due to leukemia among workers exposed to formaldehyde.[89] Extended follow-up of a cohort of British chemical workers did not report evidence of an increase in nasopharyngeal or lymphohematopoietic cancers, but a continuing statistically significant excess in lung cancers was reported.[90] Finally, a study of embalmers reported formaldehyde exposures to be associated with an increased risk of myeloid leukemia but not brain cancer.[91]

Health effects of formaldehyde in addition to cancer were reviewed by the Agency for Toxics Substances and Disease Registry in 1999[92] and supplemented in 2010,[93] and by the World Health Organization.[94] These organizations reviewed the literature concerning effects on the eyes and respiratory system, the primary point of contact for inhaled formaldehyde, including sensory irritation of eyes and respiratory tract, pulmonary function, nasal histopathology, and immune system effects. In addition, research on reproductive and developmental effects and neurological effects were discussed.

EPA released a draft Toxicological Review of Formaldehyde—Inhalation Assessment through the IRIS program for peer review by the National Research Council (NRC) and public comment in June 2010.[95] The draft assessment reviewed more recent research from animal and human studies on cancer and other health effects. The NRC released their review report in April 2011.[96] The EPA is currently revising the draft assessment in response to this review.

iii. Acetaldehyde

Acetaldehyde is classified in EPA's IRIS database as a probable human carcinogen, based on nasal tumors in rats, and is considered toxic by the inhalation, oral, and intravenous routes.[97] The URE in IRIS for acetaldehyde is 2.2×10^{-6} per μg/m^3.[98] Acetaldehyde is reasonably anticipated to be a human carcinogen by the U.S. DHHS in the 12th Report on Carcinogens and is classified as possibly carcinogenic to humans (Group 2B) by the IARC.[99 100] EPA is currently conducting a reassessment of cancer risk from inhalation exposure to acetaldehyde.

The primary noncancer effects of exposure to acetaldehyde vapors include irritation of the eyes, skin, and respiratory tract.[101] In short-term (4 week) rat studies, degeneration of olfactory epithelium was observed at various concentration levels of acetaldehyde exposure.[102 103] Data from

Mu, R.; Xu, B.; Zhang, X.; Li, K. (2003). HEI Report 115, Validation & Evaluation of Biomarkers in Workers Exposed to Benzene in China.

[77] Qu, Q., R. Shore, G. Li, X. Jin, L.C. Chen, B. Cohen, et al. (2002). Hematological changes among Chinese workers with a broad range of benzene exposures. Am. J. Industr. Med. 42: 275–285.

[78] Lan, Qing, Zhang, L., Li, G., Vermeulen, R., et al. (2004). Hematotoxically in Workers Exposed to Low Levels of Benzene. Science 306: 1774–1776.

[79] Turtletaub, K.W. and Mani, C. (2003). Benzene metabolism in rodents at doses relevant to human exposure from Urban Air. Research Reports Health Effect Inst. Report No.113.

[80] U.S. Agency for Toxic Substances and Disease Registry (ATSDR). (2007). Toxicological profile for benzene. Atlanta, GA: U.S. Department of Health and Human Services, Public Health Service. *http://www.atsdr.cdc.gov/ToxProfiles/tp3.pdf.*

[81] A minimal risk level (MRL) is defined as an estimate of the daily human exposure to a hazardous substance that is likely to be without appreciable risk of adverse noncancer health effects over a specified duration of exposure.

[82] EPA. Integrated Risk Information System. Formaldehyde (CASRN 50–00–0) *http://www.epa.gov/iris/subst/0419/htm.*

[83] National Toxicology Program, U.S. Department of Health and Human Services (HHS), 12th Report on Carcinogens, June 10, 2011.

[84] IARC Monographs on the Evaluation of Carcinogenic Risks to Humans Volume 88 (2006): Formaldehyde, 2-Butoxyethanol and 1-tert-Butoxypropan-2-ol.

[85] IARC Mongraphs on the Evaluation of Carcinogenic Risks to Humans Volume 100F (2012): Formaldehyde.

[86] Hauptmann, M.; Lubin, J.H.; Stewart, P.A.; Hayes, R.B.; Blair, A. 2003. Mortality from lymphohematopoetic malignancies among workers in formaldehyde industries. Journal of the National Cancer Institute 95: 1615–1623.

[87] Hauptmann, M.; Lubin, J.H.; Stewart, P.A.; Hayes, R.B.; Blair, A. 2004. Mortality from solid cancers among workers in formaldehyde industries. American Journal of Epidemiology 159: 1117–1130.

[88] Beane Freeman, L.E.; Blair, A.; Lubin, J.H.; Stewart, P.A.; Hayes, R.B.; Hoover, R.N.; Hauptmann, M. 2009. Mortality from lymphohematopoietic malignancies among workers in formaldehyde industries: The National Cancer Institute cohort. J. National Cancer Inst. 101: 751–761.

[89] Pinkerton, L.E. 2004. Mortality among a cohort of garment workers exposed to formaldehyde: an update. Occup. Environ. Med. 61: 193–200.

[90] Coggon, D, EC Harris, J Poole, KT Palmer. 2003. Extended follow-up of a cohort of British chemical workers exposed to formaldehyde. J National Cancer Inst. 95:1608–1615.

[91] Hauptmann, M.; Stewart P.A.; Lubin J.H.; Beane Freeman, L.E.; Hornung, R.W.; Herrick, R.F.; Hoover, R.N.; Fraumeni, J.F.; Hayes, R.B. 2009. Mortality from lymphohematopoietic malignancies and brain cancer among embalmers exposed to formaldehyde. Journal of the National Cancer Institute 101:1696–1708.

[92] ATSDR. 1999. Toxicological Profile for Formaldehyde, U.S. Department of Health and Human Services (HHS), July 1999.

[93] ATSDR. 2010. Addendum to the Toxicological Profile for Formaldehyde. U.S. Department of Health and Human Services (HHS), October 2010.

[94] IPCS. 2002. Concise International Chemical Assessment Document 40. Formaldehyde. World Health Organization.

[95] EPA (U.S. Environmental Protection Agency). 2010. Toxicological Review of Formaldehyde (CAS No. 50–00–0)—Inhalation Assessment: In Support of Summary Information on the Integrated Risk Information System (IRIS). External Review Draft. EPA/635/R–10/002A. U.S. Environmental Protection Agency, Washington DC [online]. Available: *http://cfpub.epa.gov/ncea/irs_drats/recordisplay.cfm?deid=223614.*

[96] NRC (National Research Council). 2011. Review of the Environmental Protection Agency's Draft IRIS Assessment of Formaldehyde. Washington DC: National Academies Press. *http://books.nap.edu/openbook.php?record_id=13142.*

[97] U.S. EPA (1991). Integrated Risk Information System File of Acetaldehyde. Research and Development, National Center for Environmental Assessment, Washington, DC. This material is available electronically at *http://www.epa.gov/iris/subst/0290.htm.*

[98] U.S. EPA (1991). Integrated Risk Information System File of Acetaldehyde. This material is available electronically at *http://www.epa.gov/iris/subst/0290.htm.*

[99] NTP. (2011). Report on Carcinogens, Twelfth Edition. Research Triangle Park, NC: U.S. Department of Health and Human Services, Public Health Service, National Toxicology Program. 499 pp.

[100] International Agency for Research on Cancer (IARC). (1999). Re-evaluation of some organic chemicals, hydrazine, and hydrogen peroxide. IARC Monographs on the Evaluation of Carcinogenic Risk of Chemical to Humans, Vol 71. Lyon, France.

[101] U.S. EPA (1991). Integrated Risk Information System File of Acetaldehyde. This material is available electronically at *http://www.epa.gov/iris/subst/0290.htm.*

[102] U.S. EPA. (2003). Integrated Risk Information System File of Acrolein. Research and Development, National Center for Environmental

these studies were used by EPA to develop an inhalation reference concentration of 9 μg/m³. Some asthmatics have been shown to be a sensitive subpopulation to decrements in functional expiratory volume (FEV1 test) and bronchoconstriction upon acetaldehyde inhalation.[104] The agency is currently conducting a reassessment of the health hazards from inhalation exposure to acetaldehyde.

iv. Acrolein

EPA most recently evaluated the toxicological and health effects literature related to acrolein in 2003 and concluded that the human carcinogenic potential of acrolein could not be determined because the available data were inadequate. No information was available on the carcinogenic effects of acrolein in humans and the animal data provided inadequate evidence of carcinogenicity.[105] The IARC determined in 1995 that acrolein was not classifiable as to its carcinogenicity in humans.[106]

Lesions to the lungs and upper respiratory tract of rats, rabbits, and hamsters have been observed after subchronic exposure to acrolein.[107] The Agency has developed an RfC for acrolein of 0.02 μg/m³ and an RfD of 0.5 μg/kg-day.[108] EPA is considering updating the acrolein assessment with data that have become available since the 2003 assessment was completed.

Acrolein is extremely acrid and irritating to humans when inhaled, with acute exposure resulting in upper respiratory tract irritation, mucus hypersecretion and congestion. The intense irritancy of this carbonyl has been demonstrated during controlled tests in human subjects, who suffer intolerable eye and nasal mucosal sensory reactions within minutes of exposure.[109] These data and additional studies regarding acute effects of human exposure to acrolein are summarized in EPA's 2003 IRIS Human Health Assessment for acrolein.[110] Studies in humans indicate that levels as low as 0.09 ppm (0.21 mg/m³) for five minutes may elicit subjective complaints of eye irritation with increasing concentrations leading to more extensive eye, nose and respiratory symptoms. Acute exposures in animal studies report bronchial hyper-responsiveness. Based on animal data (more pronounced respiratory irritancy in mice with allergic airway disease in comparison to non-diseased mice [111]) and demonstration of similar effects in humans (e.g., reduction in respiratory rate), individuals with compromised respiratory function (e.g., emphysema, asthma) are expected to be at increased risk of developing adverse responses to strong respiratory irritants such as acrolein. EPA does not currently have an acute reference concentration for acrolein. The available health effect reference values for acrolein have been summarized by EPA and include an ATSDR MRL for acute exposure to acrolein of 7 μg/m³ for 1–14 days exposure; and Reference Exposure Level (REL) values from the California Office of Environmental Health Hazard Assessment (OEHHA) for one-hour and 8-hour exposures of 2.5 μg/m³ and 0.7 μg/m³, respectively.[112]

v. 1,3-Butadiene

EPA has characterized 1,3-butadiene as carcinogenic to humans by inhalation.[113] [114] The IARC has determined that 1,3-butadiene is a human carcinogen and the U.S. DHHS has characterized 1,3-butadiene as a known human carcinogen.[115] [116] [117] There are numerous studies consistently demonstrating that 1,3-butadiene is metabolized into genotoxic metabolites by experimental animals and humans. The specific mechanisms of 1,3-butadiene-induced carcinogenesis are unknown; however, the scientific evidence strongly suggests that the carcinogenic effects are mediated by genotoxic metabolites. Animal data suggest that females may be more sensitive than males for cancer effects associated with 1,3-butadiene exposure; there are insufficient data in humans from which to draw conclusions about sensitive subpopulations. The URE for 1,3-butadiene is 3×10^{-5} per μg/m³.[118] 1,3-butadiene also causes a variety of reproductive and developmental effects in mice; no human data on these effects are available. The most sensitive effect was ovarian atrophy observed in a lifetime bioassay of female mice.[119] Based on this critical effect and the benchmark concentration methodology,

Assessment, Washington, DC. This material is available electronically at *http://www.epa.gov/iris/subst/0364.htm*.

[103] Appleman, L.M., R.A. Woutersen, and V.J. Feron. (1982). Inhalation toxicity of acetaldehyde in rats. I. Acute and subacute studies. Toxicology. 23: 293–297.

[104] Myou, S.; Fujimura, M.; Nishi K.; Ohka, T.; and Matsuda, T. (1993) Aerosolized acetaldehyde induces histamine-mediated bronchoconstriction in asthmatics. Am. Rev. Respir. Dis. 148(4 Pt 1): 940–943.

[105] U.S. EPA. (2003). Integrated Risk Information System File of Acrolein. Research and Development, National Center for Environmental Assessment, Washington, DC. This material is available at *http://www.epa.gov/iris/subst/0364.htm*.

[106] International Agency for Research on Cancer (IARC). (1995). Monographs on the evaluation of carcinogenic risk of chemicals to humans, Volume 63. Dry cleaning, some chlorinated solvents and other industrial chemicals, World Health Organization, Lyon, France.

[107] U.S. EPA. (2003). Integrated Risk Information System File of Acrolein. Office of Research and Development, National Center for Environmental Assessment, Washington, DC. This material is available at *http://www.epa.gov/iris/subst/0364.htm*.

[108] U.S. EPA. (2003). Integrated Risk Information System File of Acrolein. Office of Research and Development, National Center for Environmental Assessment, Washington, DC. This material is available at *http://www.epa.gov/iris/subst/0364.htm*.

[109] U.S. EPA. (2003) Toxicological review of acrolein in support of summary information on Integrated Risk Information System (IRIS) National Center for Environmental Assessment, Washington, DC. EPA/635/R–03/003. p. 10. Available online at: *http://www.epa.gov/ncea/iris/toxreviews/0364tr.pdf*.

[110] U.S. EPA. (2003) Toxicological review of acrolein in support of summary information on Integrated Risk Information System (IRIS) National Center for Environmental Assessment, Washington, DC. EPA/635/R–03/003. Available online at: *http://www.epa.gov/ncea/iris/toxreviews/0364tr.pdf*.

[111] Morris JB, Symanowicz PT, Olsen JE, et al. (2003). Immediate sensory nerve-mediated respiratory responses to irritants in healthy and allergic airway-diseased mice. J Appl Physiol 94(4):1563–1571.

[112] U.S. EPA. (2009). Graphical Arrays of Chemical-Specific Health Effect Reference Values for Inhalation Exposures (Final Report). U.S. Environmental Protection Agency, Washington, DC, EPA/600/R–09/061, 2009. *http://cfpub.epa.gov/ncea/cfm/recordisplay.cfm?deid=211003*.

[113] U.S. EPA. (2002). Health Assessment of 1,3-Butadiene. Office of Research and Development, National Center for Environmental Assessment, Washington Office, Washington, DC. Report No. EPA600–P–98–001F. This document is available electronically at *http://www.epa.gov/iris/supdocs/buta-sup.pdf*.

[114] U.S. EPA. (2002). ''Full IRIS Summary for 1,3-butadiene (CASRN 106–99–0)'' Environmental Protection Agency, Integrated Risk Information System (IRIS), Research and Development, National Center for Environmental Assessment, Washington, DC *http://www.epa.gov/iris/subst/0139.htm*.

[115] International Agency for Research on Cancer (IARC). (1999). Monographs on the evaluation of carcinogenic risk of chemicals to humans, Volume 71, Re-evaluation of some organic chemicals, hydrazine and hydrogen peroxide and Volume 97 (in preparation), World Health Organization, Lyon, France.

[116] International Agency for Research on Cancer (IARC). (2008). Monographs on the evaluation of carcinogenic risk of chemicals to humans, 1,3-Butadiene, Ethylene Oxide and Vinyl Halides (Vinyl Fluoride, Vinyl Chloride and Vinyl Bromide) Volume 97, World Health Organization, Lyon, France.

[117] NTP. (2011). Report on Carcinogens, Twelfth Edition. Research Triangle Park, NC: U.S. Department of Health and Human Services, Public Health Service, National Toxicology Program. 499 pp.

[118] U.S. EPA. (2002). ''Full IRIS Summary for 1,3-butadiene (CASRN 106–99–0)'' Environmental Protection Agency, Integrated Risk Information System (IRIS), Research and Development, National Center for Environmental Assessment, Washington, DC *http://www.epa.gov/iris/subst/0139.htm*.

[119] Bevan, C.; Stadler, J.C.; Elliot, G.S.; et al. (1996). Subchronic toxicity of 4-vinylcyclohexene in rats and mice by inhalation. Fundam. Appl. Toxicol. 32:1–10.

an RfC for chronic health effects was calculated at 0.9 ppb (approximately 2 μg/m^3).

vi. Ethanol

EPA is planning to develop an assessment of the health effects of exposure to ethanol, a compound which is not currently listed on EPA's IRIS database. Extensive health effects data are available for ingestion of ethanol, while data on inhalation exposure effects are sparse. In developing the assessment, EPA is evaluating pharmacokinetic models as a means of extrapolating across species (animal to human) and across exposure routes (oral to inhalation) to better characterize the health hazards and dose-response relationships for low levels of ethanol exposure in the environment.

vii. Polycyclic Organic Matter

The term polycyclic organic matter (POM) defines a broad class of compounds that includes the polycyclic aromatic hydrocarbon compounds (PAHs). One of these compounds, naphthalene, is discussed separately below. POM compounds are formed primarily from combustion and are present in the atmosphere in gas and particulate form. Cancer is the major concern from exposure to POM. Epidemiologic studies have reported an increase in lung cancer in humans exposed to diesel exhaust, coke oven emissions, roofing tar emissions, and cigarette smoke; all of these mixtures contain POM compounds.[120] [121] Animal studies have reported respiratory tract tumors from inhalation exposure to benzo[a]pyrene and alimentary tract and liver tumors from oral exposure to benzo[a]pyrene.[122] In 1997 EPA classified seven PAHs (benzo[a]pyrene, benz[a]anthracene, chrysene, benzo[b]fluoranthene, benzo[k]fluoranthene, dibenz[a,h]anthracene, and indeno[1,2,3-cd]pyrene) as Group B2, probable human carcinogens.[123] Since that time, studies have found that maternal exposures to PAHs in a population of pregnant women were associated with several adverse birth outcomes, including low birth weight and reduced length at birth, as well as impaired cognitive development in preschool children (3 years of age).[124] [125] These and similar studies are being evaluated as a part of the ongoing IRIS assessment of health effects associated with exposure to benzo[a]pyrene.

viii. PAN

PAN (peroxy acetyl nitrate) has not been evaluated by EPA's IRIS program. Information regarding the potential carcinogenicity of PAN is limited. As noted in the EPA air quality criteria document for ozone and related photochemical oxidants, cytogenetic studies indicate that PAN is not a potent mutagen, clastogen (a compound that can cause breaks in chromosomes), or DNA-damaging agent in mammalian cells either in vivo or in vitro. Some studies suggest that PAN may be a weak bacterial mutagen at concentrations much higher than exist in present urban atmospheres.[126]

Effects of ground-level smog causing intense eye irritation have been attributed to photochemical oxidants, including PAN.[127] Animal toxicological information on the inhalation effects of the non-ozone oxidants has been limited to a few studies on PAN. Acute exposure to levels of PAN can cause changes in lung morphology, behavioral modifications, weight loss, and susceptibility to pulmonary infections. Human exposure studies indicate minor pulmonary function effects at high PAN concentrations, but large inter-individual variability precludes definitive conclusions.[128]

ix. Naphthalene

Naphthalene is found in small quantities in gasoline and diesel fuels. Naphthalene emissions have been measured in larger quantities in both gasoline and diesel exhaust compared with evaporative emissions from mobile sources, indicating it is primarily a product of combustion. Acute (short-term) exposure of humans to naphthalene by inhalation, ingestion, or dermal contact is associated with hemolytic anemia and damage to the liver and the nervous system.[129] Chronic (long term) exposure of workers and rodents to naphthalene has been reported to cause cataracts and retinal damage.[130] EPA released an external review draft of a reassessment of the inhalation carcinogenicity of naphthalene based on a number of recent animal carcinogenicity studies.[131] The draft reassessment completed external peer review.[132] Based on external peer review comments received, a revised draft assessment that considers all routes of exposure, as well as cancer and noncancer effects, is under development. The external review draft does not represent official agency opinion and was released solely for the purposes of external peer review and public comment. The National Toxicology Program listed naphthalene

[120] Agency for Toxic Substances and Disease Registry (ATSDR). (1995). Toxicological profile for Polycyclic Aromatic Hydrocarbons (PAHs). Atlanta, GA: U.S. Department of Health and Human Services, Public Health Service. Available electronically at *http://www.atsdr.cdc.gov/ToxProfiles/TP.asp?id=122&tid=25.*

[121] U.S. EPA (2002). *Health Assessment Document for Diesel Engine Exhaust.* EPA/600/8–90/057F Office of Research and Development, Washington DC. *http://cfpub.epa.gov/ncea/cfm/recordisplay.cfm?deid=29060.*

[122] International Agency for Research on Cancer (IARC). (2012). Monographs on the Evaluation of the Carcinogenic Risk of Chemicals for Humans, Chemical Agents and Related Occupations. Vol. 100F. Lyon, France.

[123] U.S. EPA (1997). Integrated Risk Information System File of indeno(1,2,3-cd)pyrene. Research and Development, National Center for Environmental Assessment, Washington, DC. This material is available electronically at *http://www.epa.gov/ncea/iris/subst/0457.htm.*

[124] Perera, F.P.; Rauh, V.; Tsai, W–Y.; et al. (2002). Effect of transplacental exposure to environmental pollutants on birth outcomes in a multiethnic population. Environ Health Perspect. 111: 201–205.

[125] Perera, F.P.; Rauh, V.; Whyatt, R.M.; Tsai, W.Y.; Tang, D.; Diaz, D.; Hoepner, L.; Barr, D.; Tu, Y.H.; Camann, D.; Kinney, P. (2006). Effect of prenatal exposure to airborne polycyclic aromatic hydrocarbons on neurodevelopment in the first 3 years of life among inner-city children. Environ Health Perspect 114: 1287–1292.

[126] U.S. EPA. (2006). Air quality criteria for ozone and related photochemical oxidants (Ozone CD). Research Triangle Park, NC: National Center for Environmental Assessment; report no. EPA/600/R–05/004aF-cF.3v. page 5–78. Available at *http://cfpub.epa.gov/ncea/.*

[127] U.S. EPA (2005). Air Quality Criteria for Ozone and Related Photochemical Oxidants (Final). U.S. Environmental Protection Agency, Washington, DC, EPA 600/R–05/004aF-cF, 2006. page 5–63. This document is available in Docket EPA–HQ–OAR–2005–0161. This document may be accessed electronically at: *http://www.epa.gov/ttn/naaqs/standards/ozone/s_o3_cr_cd.html.*

[128] U.S. EPA (2005). Air Quality Criteria for Ozone and Related Photochemical Oxidants (Final). U.S. Environmental Protection Agency, Washington, DC, EPA 600/R–05/004aF-cF, 2006. page 5–78. This document is available in Docket EPA–HQ–OAR–2005–0161. This document may be accessed electronically at: *http://www.epa.gov/ttn/naaqs/standards/ozone/s_o3_cr_cd.html.*

[129] U.S. EPA. 1998. Toxicological Review of Naphthalene (Reassessment of the Inhalation Cancer Risk), Environmental Protection Agency, Integrated Risk Information System, Research and Development, National Center for Environmental Assessment, Washington, DC. This material is available electronically at *http://www.epa.gov/iris/subst/0436.htm.*

[130] U.S. EPA. 1998. Toxicological Review of Naphthalene (Reassessment of the Inhalation Cancer Risk), Environmental Protection Agency, Integrated Risk Information System, Research and Development, National Center for Environmental Assessment, Washington, DC. This material is available electronically at *http://www.epa.gov/iris/subst/0436.htm.*

[131] U.S. EPA. (1998). Toxicological Review of Naphthalene (Reassessment of the Inhalation Cancer Risk), Environmental Protection Agency, Integrated Risk Information System, Research and Development, National Center for Environmental Assessment, Washington, DC. This material is available electronically at *http://www.epa.gov/iris/subst/0436.htm.*

[132] Oak Ridge Institute for Science and Education. (2004). External Peer Review for the IRIS Reassessment of the Inhalation Carcinogenicity of Naphthalene. August 2004. *http://cfpub.epa.gov/ncea/cfm/recordisplay.cfm?deid=84403.*

as ''reasonably anticipated to be a human carcinogen'' in 2004 on the basis of bioassays reporting clear evidence of carcinogenicity in rats and some evidence of carcinogenicity in mice.[133] California EPA has released a new risk assessment for naphthalene, and the IARC has reevaluated naphthalene and re-classified it as Group 2B: possibly carcinogenic to humans.[134]

Naphthalene also causes a number of chronic non-cancer effects in animals, including abnormal cell changes and growth in respiratory and nasal tissues.[135] The current EPA IRIS assessment includes noncancer data on hyperplasia and metaplasia in nasal tissue that form the basis of the inhalation RfC of 3 $\mu g/m^3$.[136] The ATSDR MRL for acute exposure to naphthalene is 0.6 mg/kg/day.

x. Other Air Toxics

In addition to the compounds described above, other compounds in gaseous hydrocarbon and PM emissions from light-duty vehicles would be affected by this proposal. Mobile source air toxic compounds that would potentially be impacted include ethylbenzene, propionaldehyde, toluene, and xylene. Information regarding the health effects of these compounds can be found in EPA's IRIS database.[137]

b. Current Levels of Air Toxics

The majority of Americans continue to be exposed to ambient concentrations of air toxics at levels which have the potential to cause adverse health effects.[138] The levels of air toxics to which people are exposed vary depending on where people live and work and the kinds of activities in which they engage, as discussed in detail in U.S. EPA's most recent Mobile Source Air Toxics Rule.[139] According to the National Air Toxic Assessment (NATA) for 2005,[140] mobile sources were responsible for 43 percent of outdoor toxic emissions and over 50 percent of the cancer risk and noncancer hazard associated with primary emissions. Mobile sources are also large contributors to precursor emissions which react to form secondary concentrations of air toxics. Formaldehyde is the largest contributor to cancer risk of all 80 pollutants quantitatively assessed in the 2005 NATA. Mobile sources were responsible for over 40 percent of primary emissions of this pollutant in 2005, and are major contributors to formaldehyde precursor emissions. Benzene is also a large contributor to cancer risk, and mobile sources account for over 70 percent of ambient exposure. Over the years, EPA has implemented a number of mobile source and fuel controls which have resulted in VOC reductions, which also reduced formaldehyde, benzene and other air toxic emissions.

6. Near-Roadway Pollution

Locations in close proximity to major roadways generally have elevated concentrations of many air pollutants emitted from motor vehicles. Hundreds of such studies have been published in peer-reviewed journals, concluding that concentrations of CO, NO, NO_2, benzene, aldehydes, particulate matter, black carbon, and many other compounds are elevated in ambient air within approximately 300–600 meters (about 1,000–2,000 feet) of major roadways. Highest concentrations of most pollutants emitted directly by motor vehicles are found at locations within 50 meters (about 165 feet) of the edge of a roadway's traffic lanes.

A recent large-scale review of air quality measurements in vicinity of major roadways between 1978 and 2008 concluded that the pollutants with the steepest concentration gradients in vicinities of roadways were CO, ultrafine particles, metals, elemental carbon (EC), NO, NO_X, and several VOCs.[141] These pollutants showed a large reduction in concentrations within 100 meters downwind of the roadway. Pollutants that showed more gradual reductions with distance from roadways included benzene, NO_2, $PM_{2.5}$, and PM_{10}. In the review article, results varied based on the method of statistical analysis used to determine the trend.

For pollutants with relatively high background concentrations relative to near-road concentrations, detecting concentration gradients can be difficult. For example, many aldehydes have high background concentrations as a result of photochemical breakdown of precursors from many different organic compounds. This can make detection of gradients around roadways and other primary emission sources difficult. However, several studies have measured aldehydes in multiple weather conditions, and found higher concentrations of many carbonyls downwind of roadways.[142] [143] These findings suggest a substantial roadway source of these carbonyls.

In the past 15 years, many studies have been published with results showing that populations who live, work, or go to school near high-traffic roadways experience higher rates of numerous adverse health effects, compared to populations far away from major roads.[144] In addition, numerous studies have found adverse health effects associated with spending time in traffic, such as commuting or walking along high-traffic roadways. The health outcomes with the strongest evidence linking them with traffic-associated air pollutants are respiratory effects, particularly in asthmatic children, and cardiovascular effects.

Numerous reviews of this body of health literature have been published as well. In 2010, an expert panel of the Health Effects Institute (HEI) published a review of hundreds of exposure, epidemiology, and toxicology studies.[145] The panel rated how the evidence for each type of health outcome supported a conclusion of a causal association with traffic-

[133] NTP. (2011). Report on Carcinogens, Twelfth Edition. Research Triangle Park, NC: U.S. Department of Health and Human Services, Public Health Service, National Toxicology Program. 499 pp.

[134] International Agency for Research on Cancer (IARC). (2002). Monographs on the Evaluation of the Carcinogenic Risk of Chemicals for Humans. Vol. 82. Lyon, France.

[135] U.S. EPA. (1998). Toxicological Review of Naphthalene, Environmental Protection Agency, Integrated Risk Information System, Research and Development, National Center for Environmental Assessment, Washington, DC. This material is available electronically at *http://www.epa.gov/iris/subst/0436.htm.*

[136] U.S. EPA. (1998). Toxicological Review of Naphthalene. Environmental Protection Agency, Integrated Risk Information System (IRIS), Research and Development, National Center for Environmental Assessment, Washington, DC *http://www.epa.gov/iris/subst/0436.htm.*

[137] U.S. EPA Integrated Risk Information System (IRIS) database is available at: *www.epa.gov/iris.*

[138] U.S. Environmental Protection Agency (2007). Control of Hazardous Air Pollutants from Mobile Sources; Final Rule. 72 FR 8434, February 26, 2007.

[139] U. S. Environmental Protection Agency (2007). Control of Hazardous Air Pollutants from Mobile Sources; Final Rule. 72 FR 8434, February 26, 2007.

[140] U.S. EPA. (2011). 2005 National-Scale Air Toxics Assessment. *http://www.epa.gov/ttn/atw/nata2005/.*

[141] Karner, A.A.; Eisinger, D.S.; Niemeier, D.A. (2010). Near-roadway air quality: synthesizing the findings from real-world data. Environ Sci Technol 44: 5334–5344.

[142] Liu, W.; Zhang, J.; Kwon, J.l; et al. (2006). Concentrations and source characteristics of airborne carbonyl compounds measured outside urban residences. J Air Waste Manage Assoc 56: 1196–1204.

[143] Cahill, T.M.; Charles, M.J.; Seaman, V.Y. (2010). Development and application of a sensitive method to determine concentrations of acrolein and other carbonyls in ambient air. Health Effects Institute Research Report 149.Available at *http://dx.doi.org.*

[144] In the widely-used PubMed database of health publications, between January 1, 1990 and August 18, 2011, 605 publications contained the keywords ''traffic, pollution, epidemiology,'' with approximately half the studies published after 2007.

[145] Health Effects Institute Panel on the Health Effects of Traffic-Related Air Pollution. (2010). Traffic-related air pollution: a critical review of the literature on emissions, exposure, and health effects. HEI Special Report 17. Available at *http://www.healtheffects.org.*

associated air pollution as either ''sufficient,'' ''suggestive but not sufficient,'' or ''inadequate and insufficient.'' The panel categorized evidence of a causal association for exacerbation of childhood asthma as ''sufficient.'' The panel categorized evidence of a causal association for new onset asthma as between ''sufficient'' and as ''suggestive but not sufficient.'' ''Suggestive of a causal association'' was how the panel categorized evidence linking traffic-associated air pollutants with exacerbation of adult respiratory symptoms and lung function decrement. It categorized as ''inadequate and insufficient'' evidence of a causal relationship between traffic-related air pollution and health care utilization for respiratory problems, new onset adult asthma, chronic obstructive pulmonary disease (COPD), nonasthmatic respiratory allergy, and cancer in adults and children. Other literature reviews have been published with conclusions similar to the HEI panel's.[146 147 148] Health outcomes with few publications suggest the possibility of other effects still lacking sufficient evidence to draw definitive conclusions. Among these outcomes with a small number of positive studies are neurological impacts (e.g., autism and reduced cognitive function) and reproductive outcomes (e.g., preterm birth, low birth weight).[149 150 151 152]

In addition to health outcomes, particularly cardiopulmonary effects, conclusions of numerous studies suggest mechanisms by which traffic-related air pollution affects health. Numerous studies indicate that near-roadway exposures increase systemic inflammation, affecting organ systems, including blood vessels and lungs.[153 154 155 156] Long-term exposures in near-road environments have been associated with inflammation-associated conditions, such as atherosclerosis and asthma.[157 158 159]

Several studies suggest that some factors may increase susceptibility to the effects of traffic-associated air pollution. Several studies have found stronger respiratory associations in children experiencing chronic social stress, such as in violent neighborhoods or in homes with high family stress.[160 161 162]

The risks associated with residence, workplace, or schools near major roads are of potentially high public health significance due to the large population in such locations. According to the 2009 American Housing Survey, over 22 million homes (17.0 percent of all U.S. housing units) were located within 300 feet of an airport, railroad, or highway with four or more lanes. This corresponds to a population of more than 50 million U.S. residents in close proximity to high-traffic roadways or other transportation sources. As discussed in Section III, populations near major roads have higher fractions of minority residents and lower socioeconomic status. Furthermore, on average, Americans spend more than an hour traveling each day, bringing nearly all residents into a high-exposure microenvironment for part of the day.

EPA continues to research near-road air quality, including the types of pollutants found in high concentrations near major roads and health problems associated with the mixture of pollutants near roads.

7. Environmental Impacts of Motor Vehicles and Fuels

a. Plant and Ecosystem Effects of Ozone

Elevated ozone levels contribute to environmental effects, with impacts to plants and ecosystems being of most concern. Ozone can produce both acute and chronic injury in sensitive species depending on the concentration level and the duration of the exposure. Ozone effects also tend to accumulate over the growing season of the plant, so that even low concentrations experienced for a longer duration have the potential to create chronic stress on vegetation. Ozone damage to plants includes visible injury to leaves and impaired photosynthesis, both of which can lead to reduced plant growth and reproduction, resulting in reduced crop yields, forestry production, and use of sensitive ornamentals in landscaping. In addition, the impairment of photosynthesis, the process by which the plant makes carbohydrates (its source of energy and food), can lead to a subsequent reduction in root growth and carbohydrate storage below ground, resulting in other, more subtle plant and ecosystems impacts.

These latter impacts include increased susceptibility of plants to insect attack, disease, harsh weather, interspecies competition and overall decreased plant vigor. The adverse effects of ozone on forest and other natural vegetation can potentially lead to species shifts and loss from the affected ecosystems, resulting in a loss or reduction in associated ecosystem goods and services. Lastly, visible ozone injury to leaves can result in a loss of aesthetic value in areas of special scenic significance like national parks and wilderness areas. The final 2006 Ozone Air Quality Criteria Document presents more detailed information on ozone effects on vegetation and ecosystems.

[146] Boothe, V.L.; Shendell, D.G. (2008). Potential health effects associated with residential proximity to freeways and primay roads: review of scientific literature, 1999–2006. J Environ Health 70: 33–41.

[147] Salam, M.T.; Islam, T.; Gilliland, F.D. (2008). Recent evidence for adverse effects of residential proximity to traffic sources on asthma. Curr Opin Pulm Med 14: 3–8.

[148] Raaschou-Nielsen, O.; Reynolds, P. (2006). Air pollution and childhood cancer: a review of the epidemiological literature. Int J Cancer 118: 2920–9.

[149] Volk, H.E.; Hertz-Picciotto, I.; Delwiche, L.; et al. (2011). Residential proximity to freeways and autism in the CHARGE study. Environ Health Perspect 119: 873–877.

[150] Franco-Suglia, S.; Gryparis, A.; Wright, R.O.; et al. (2007). Association of black carbon with cognition among children in a prospective birth cohort study. Am J Epidemiol. doi: 10.1093/aje/kwm308. [Online at *http://dx.doi.org*].

[151] Power, M.C.; Weisskopf, M.G.; Alexeef, SE.; et al. (2011). Traffic-related air pollution and cognitive function in a cohort of older men. Environ Health Perspect 2011: 682–687.

[152] Wu, J.; Wilhelm, M.; Chung, J.; et al. (2011). Comparing exposure assessment methods for traffic-related air pollution in and adverse pregnancy outcome study. Environ Res 111: 685–6692.

[153] Riediker, M. (2007). Cardiovascular effects of fine particulate matter components in highway patrol officers. Inhal Toxicol 19: 99–105. doi: 10.1080/08958370701495238 Available at *http://dx.doi.org*.

[154] Alexeef, S.E.; Coull, B.A.; Gryparis, A.; et al. (2011). Medium-term exposure to traffic-related air pollution and markers of inflammation and endothelial function. Environ Health Perspect 119: 481–486. doi:10.1289/ehp.1002560 Available at *http://dx.doi.org*.

[155] Eckel. S.P.; Berhane, K.; Salam, M.T.; et al. (2011). Traffic-related pollution exposure and exhaled nitric oxide in the Children's Health Study. Environ Health Perspect (IN PRESS). doi:10.1289/ehp.1103516. Available at *http://dx.doi.org*.

[156] Zhang, J.; McCreanor, J.E.; Cullinan, P.; et al. (2009). Health effects of real-world exposure diesel exhaust in persons with asthma. Res Rep Health Effects Inst 138. [Online at *http://www.healtheffects.org*]

[157] Adar, S.D.; Klein, R.; Klein, E.K.; et al. (2010). Air pollution and the microvasculatory: a cross-sectional assessment of in vivo retinal images in the population-based Multi-Ethnic Study of Atherosclerosis. PLoS Med 7(11): E1000372. doi:10.1371/journal.pmed.1000372. Available at *http://dx.doi.org*.

[158] Kan, H.; Heiss, G.; Rose, K.M.; et al. (2008). Proxpective analysis of traffic exposure as a risk factor for incident coronary heart disease: the Atherosclerosis Risk in Communities (ARIC) study. Environ Health Perspect 116: 1463–1468. doi:10.1289/ehp.11290. Available at *http://dx.doi.org*.

[159] McConnell, R.; Islam, T.; Shankardass, K.; et al. (2010). Childhood incident asthma and traffic-related air pollution at home and school. Environ Health Perspect 1021–1026.

[160] Islam, T.; Urban, R.; Gauderman, W.J.; et al. (2011). Parental stress increases the detrimental effect of traffic exposure on children's lung function. Am J Respir Crit Care Med (In press)

[161] Clougherty, J.E.; Levy, J.I.; Kubzansky, L.D.; et al. (2007). Synergistic effects of traffic-related air pollution and exposure to violence on urban asthma etiology. Environ Health Perspect 115: 1140–1146.

[162] Chen, E.; Schrier, H.M.; Strunk, R.C.; et al. (2008). Chronic traffic-related air pollution and stress interact to predict biologic and clinical outcomes in asthma. Environ Health Perspect 116: 970–5.

b. Visibility

Visibility can be defined as the degree to which the atmosphere is transparent to visible light.[163] Visibility impairment is caused by light scattering and absorption by suspended particles and gases. Visibility is important because it has direct significance to people's enjoyment of daily activities in all parts of the country. Individuals value good visibility for the well-being it provides them directly, where they live and work, and in places where they enjoy recreational opportunities. Visibility is also highly valued in significant natural areas, such as national parks and wilderness areas, and special emphasis is given to protecting visibility in these areas. For more information on visibility see the final 2009 PM ISA.[164]

EPA is pursuing a two-part strategy to address visibility impairment. First, EPA developed the regional haze program which was put in place in July 1999 to protect the visibility in Mandatory Class I Federal areas.[165] There are 156 national parks, forests and wilderness areas categorized as Mandatory Class I Federal areas.[166] These areas are defined in CAA section 162 as those national parks exceeding 6,000 acres, wilderness areas and memorial parks exceeding 5,000 acres, and all international parks which were in existence on August 7, 1977. Second, EPA has concluded that $PM_{2.5}$ causes adverse effects on visibility in other areas that are not protected by the Regional Haze Rule, depending on $PM_{2.5}$ concentrations and other factors that control their visibility impact effectiveness such as dry chemical composition and relative humidity (i.e., an indicator of the water composition of the particles). EPA revised the $PM_{2.5}$ standards in December 2012 and established a target level of protection that is expected to be met through attainment of the existing secondary standards for $PM_{2.5}$.

i. Current Visibility Levels

As mentioned in Section II.B.2.c, millions of people live in nonattainment areas for the $PM_{2.5}$ NAAQS. These populations, as well as large numbers of individuals who travel to these areas, are likely to experience visibility impairment. In addition, while visibility trends have improved in mandatory class I federal areas, the most recent data show that these areas continue to suffer from visibility impairment. In summary, visibility impairment is experienced throughout the U.S., in multi-state regions, urban areas, and remote mandatory class I federal areas.

c. Atmospheric Deposition

Wet and dry deposition of ambient particulate matter delivers a complex mixture of metals (e.g., mercury, zinc, lead, nickel, aluminum, cadmium), organic compounds (e.g., polycyclic organic matter, dioxins, furans) and inorganic compounds (e.g., nitrate, sulfate) to terrestrial and aquatic ecosystems. The chemical form of the compounds deposited depends on a variety of factors including ambient conditions (e.g., temperature, humidity, oxidant levels) and the sources of the material. Chemical and physical transformations of the compounds occur in the atmosphere as well as the media onto which they deposit. These transformations in turn influence the fate, bioavailability and potential toxicity of these compounds. Atmospheric deposition has been identified as a key component of the environmental and human health hazard posed by several pollutants including mercury, dioxin and PCBs.[167]

Adverse impacts on water quality can occur when atmospheric contaminants deposit to the water surface or when material deposited on the land enters a waterbody through runoff. Potential impacts of atmospheric deposition to waterbodies include those related to both nutrient and toxic inputs. Adverse effects to human health and welfare can occur from the addition of excess nitrogen via atmospheric deposition. The nitrogen-nutrient enrichment contributes to toxic algae blooms and zones of depleted oxygen, which can lead to fish kills, frequently in coastal waters. Deposition of heavy metals or other toxics may lead to the human ingestion of contaminated fish, impairment of drinking water, damage to freshwater and marine ecosystem components, and limits to recreational uses. Several studies have been conducted in U.S. coastal waters and in the Great Lakes Region in which the role of ambient PM deposition and runoff is investigated.[168] [169] [170] [171] [172]

Atmospheric deposition of nitrogen and sulfur contributes to acidification, altering biogeochemistry and affecting animal and plant life in terrestrial and aquatic ecosystems across the United States. The sensitivity of terrestrial and aquatic ecosystems to acidification from nitrogen and sulfur deposition is predominantly governed by geology. Prolonged exposure to excess nitrogen and sulfur deposition in sensitive areas acidifies lakes, rivers and soils. Increased acidity in surface waters creates inhospitable conditions for biota and affects the abundance and nutritional value of preferred prey species, threatening biodiversity and ecosystem function. Over time, acidifying deposition also removes essential nutrients from forest soils, depleting the capacity of soils to neutralize future acid loadings and negatively affecting forest sustainability. Major effects include a decline in sensitive forest tree species, such as red spruce (*Picea rubens*) and sugar maple (*Acer saccharum*), and a loss of biodiversity of fishes, zooplankton, and macro invertebrates.

In addition to the role nitrogen deposition plays in acidification, nitrogen deposition also leads to nutrient enrichment and altered biogeochemical cycling. In aquatic systems increased nitrogen can alter species assemblages and cause eutrophication. In terrestrial systems nitrogen loading can lead to loss of nitrogen sensitive lichen species, decreased biodiversity of grasslands, meadows and other sensitive habitats, and increased potential for invasive species. For a broader explanation of the topics treated here, refer to the description in Section 6.3.2 of the RIA.

Adverse impacts on soil chemistry and plant life have been observed for areas heavily influenced by atmospheric

[163] National Research Council, (1993). Protecting Visibility in National Parks and Wilderness Areas. National Academy of Sciences Committee on Haze in National Parks and Wilderness Areas. National Academy Press, Washington, DC. This book can be viewed on the National Academy Press Web site at *http://www.nap.edu/books/0309048443/html/*.

[164] U.S. EPA. (2009). Integrated Science Assessment for Particulate Matter (Final Report). U.S. Environmental Protection Agency, Washington, DC, EPA/600/R–08/139F.

[165] 64 FR 35714 (July 1, 1999).

[166] 62 FR 38680–38681 (July 18, 1997).

[167] U.S. EPA. (2000). Deposition of Air Pollutants to the Great Waters: Third Report to Congress. Office of Air Quality Planning and Standards. EPA–453/R–00–0005.

[168] U.S. EPA. (2004). National Coastal Condition Report II. Office of Research and Development/ Office of Water. EPA–620/R–03/002.

[169] Gao, Y., E.D. Nelson, M.P. Field, et al. (2002). Characterization of atmospheric trace elements on $PM_{2.5}$ particulate matter over the New York-New Jersey harbor estuary. *Atmos. Environ.* 36: 1077–1086.

[170] Kim, G., N. Hussain, J.R. Scudlark, and T.M. Church. (2000). Factors influencing the atmospheric depositional fluxes of stable Pb, 210Pb, and 7Be into Chesapeake Bay. *J. Atmos. Chem.* 36: 65–79.

[171] Lu, R., R.P. Turco, K. Stolzenbach, et al. (2003). Dry deposition of airborne trace metals on the Los Angeles Basin and adjacent coastal waters. *J. Geophys. Res.* 108(D2, 4074): AAC 11–1 to 11–24.

[172] Marvin, C.H., M.N. Charlton, E.J. Reiner, et al. (2002). Surficial sediment contamination in Lakes Erie and Ontario: A comparative analysis. *J. Great Lakes Res.* 28(3): 437–450.

deposition of nutrients, metals and acid species, resulting in species shifts, loss of biodiversity, forest decline, damage to forest productivity and reductions in ecosystem services. Potential impacts also include adverse effects to human health through ingestion of contaminated vegetation or livestock (as in the case for dioxin deposition), reduction in crop yield, and limited use of land due to contamination.

Atmospheric deposition of pollutants can reduce the aesthetic appeal of buildings and culturally important articles through soiling, and can contribute directly (or in conjunction with other pollutants) to structural damage by means of corrosion or erosion. Atmospheric deposition may affect materials principally by promoting and accelerating the corrosion of metals, by degrading paints, and by deteriorating building materials such as concrete and limestone. Particles contribute to these effects because of their electrolytic, hygroscopic, and acidic properties, and their ability to adsorb corrosive gases (principally sulfur dioxide).

i. Current Nitrogen and Sulfur Deposition

Over the past two decades, the EPA has undertaken numerous efforts to reduce nitrogen and sulfur deposition across the U.S. Analyses of long-term monitoring data for the U.S. show that deposition of both nitrogen and sulfur compounds has decreased over the last 17 years. The data show that reductions were more substantial for sulfur compounds than for nitrogen compounds. In the eastern U.S., where data are most abundant, total sulfur deposition decreased by about 44 percent between 1990 and 2007, while total nitrogen deposition decreased by 25 percent over the same time frame.[173] These numbers are generated by the U.S. national monitoring network and they likely underestimate nitrogen deposition because neither ammonia nor organic nitrogen is measured. Although total nitrogen and sulfur deposition has decreased over time, many areas continue to be negatively impacted by deposition. Deposition of inorganic nitrogen and sulfur species routinely measured in the U.S. between 2005 and 2007 were as high as 9.6 kilograms of nitrogen per hectare (kg N/ha) averaged over three years and 20.8 kilograms of sulfur per hectare (kg S/ha) averaged over three years.[174]

d. Environmental Effects of Air Toxics

Emissions from producing, transporting and combusting fuel contribute to ambient levels of pollutants that contribute to adverse effects on vegetation. Volatile organic compounds, some of which are considered air toxics, have long been suspected to play a role in vegetation damage.[175] In laboratory experiments, a wide range of tolerance to VOCs has been observed.[176] Decreases in harvested seed pod weight have been reported for the more sensitive plants, and some studies have reported effects on seed germination, flowering and fruit ripening. Effects of individual VOCs or their role in conjunction with other stressors (e.g., acidification, drought, temperature extremes) have not been well studied. In a recent study of a mixture of VOCs including ethanol and toluene on herbaceous plants, significant effects on seed production, leaf water content and photosynthetic efficiency were reported for some plant species.[177]

Research suggests an adverse impact of vehicle exhaust on plants, which has in some cases been attributed to aromatic compounds and in other cases to nitrogen oxides.[178] [179] [180]

III. How would this proposal reduce emissions and air pollution?

A. Effects of the Proposed Vehicle and Fuel Changes on Mobile Source Emissions

The vehicle and fuel standards that EPA is proposing would significantly reduce the tailpipe and evaporative emissions of light- and heavy-duty vehicles in several ways, as described in this section. In addition, the proposed gasoline sulfur standard would reduce emissions of SO_2 from existing gasoline-powered vehicles and equipment. As described in Section II, all of these emission reductions would in turn improve air quality nationwide and reduce the health effects associated with air pollution from mobile sources.

As with the Tier 2 program, EPA is proposing to implement closely-coordinated requirements for both automakers and refiners in the same rulemaking action. The proposed vehicle emission standards and gasoline sulfur standards represent a ''systems approach'' to reducing vehicle-related exhaust and evaporative emissions. By recognizing the relationships among the various sources of emissions addressed by this proposed rule, we have been able to integrate the provisions into a single, coordinated program.

1. How do vehicles produce the emissions addressed in this proposal?

The degree to which vehicles produce exhaust and evaporative emissions depends on the design and functionality of the engine and the associated exhaust and evaporative emission controls, in concert with the properties of the fuel on which the vehicle is operating. In the following paragraphs, we discuss how light- and heavy-duty vehicles produce each of these types of emissions, both from the tailpipe and from the fuel system.

a. Tailpipe (Exhaust) Emissions

Which pollutants are emitted at the vehicle's tailpipe and their quantities depend on how the fuel is combusted in the engine and how the resulting gases are treated in the exhaust system. Historically, much of tailpipe emission control has focused on hydrocarbon compounds (HC) and NO_X. The portion of hydrocarbons that is methane is minimally reactive in forming ozone. Thus, for emission control purposes, the focus is generally on non-methane hydrocarbons (NMHC), which are also expressed as non-methane organic gases (NMOG) in order to account for oxygenates (usually ethanol) now usually present in the fuel.

Tailpipe hydrocarbon emissions also include several toxic pollutants, including benzene, acetaldehyde, and formaldehyde. To varying degrees, the mass emissions of these pollutants are reduced along with other hydrocarbons by the catalytic converter and improved engine controls.

[173] U.S. EPA. (2012). U.S. EPA's Report on the Environment. Data accessed online February 15, 2012 at: *http://cfpub.epa.gov/eroe/index.cfm?fuseaction=detail.viewPDF&ch=46&lShowInd=0&subtop=341&lv=list.listByChapter&r=216610.*

[174] U.S. EPA. (2012). U.S. EPA's Report on the Environment. Data accessed online February 15, 2012 at: *http://cfpub.epa.gov/eroe/index.cfm?fuseaction=detail.viewPDF&ch=46&lShowInd=0&subtop=341&lv=list.listByChapter&r=216610.*

[175] U.S. EPA. (1991). Effects of organic chemicals in the atmosphere on terrestrial plants. EPA/600/3–91/001.

[176] Cape JN, ID Leith, J Binnie, J Content, M Donkin, M Skewes, DN Price AR Brown, AD Sharpe. (2003). Effects of VOCs on herbaceous plants in an open-top chamber experiment. Environ. Pollut. 124:341–343.

[177] Cape JN, ID Leith, J Binnie, J Content, M Donkin, M Skewes, DN Price AR Brown, AD Sharpe. (2003). Effects of VOCs on herbaceous plants in an open-top chamber experiment. Environ. Pollut. 124:341–343.

[178] Viskari E–L. (2000). Epicuticular wax of Norway spruce needles as indicator of traffic pollutant deposition. Water, Air, and Soil Pollut. 121:327–337.

[179] Ugrekhelidze D, F Korte, G Kvesitadze. (1997). Uptake and transformation of benzene and toluene by plant leaves. Ecotox. Environ. Safety 37:24–29.

[180] Kammerbauer H, H Selinger, R Rommelt, A Ziegler-Jons, D Knoppik, B Hock. (1987). Toxic components of motor vehicle emissions for the spruce Picea abies. Environ. Pollut. 48:235–243.

Light- and heavy-duty gasoline vehicles also emit PM and CO. PM forms directly as a combustion product (primarily as elemental carbon, usually called soot) and also indirectly as semi-volatile hydrocarbon compounds that form particles in the exhaust system or soon after exiting the tailpipe. CO is a product of incomplete fuel combustion.

When operating properly, modern exhaust emission controls (centering on the catalytic convertor) can reduce much of the HC (including toxics), NO_X and CO exiting the engine. However, tailpipe emissions are increased during periods of vehicle startup, as catalytic convertors must warm up to be effective; during subsequent operation due to the interference of sulfur in the gasoline; during high load operating events, as the catalyst is overwhelmed or its operation is modified to protect against permanent damage; and as a vehicle ages, as the catalyst degrades in performance due to the effects of high temperature operation and contaminants in the fuel and lubricating oil.

b. Evaporative Emissions

Gasoline vehicles also produce vapors in the fuel tank and fuel system that can be released as evaporative emissions. These vapors are primarily the lighter, more volatile hydrocarbon compounds in the gasoline, which, like exhaust hydrocarbons, contribute to concentrations of VOCs in the atmosphere.

As discussed in Section IV below, vehicle evaporative (''evap'') control systems are designed to block or capture vapors as they are generated. Vapors are generated in the vehicle fuel tank and fuel system (and released to the atmosphere if not adequately controlled) as fuel heats up due to ambient temperature increase and/or vehicle operation. Fuel vapors are also released when they permeate through hose material, when they leak at connections or due to damaged components, and during refueling events.

In general, the evap emission controls on current vehicles (and that would be improved under this proposed rule) consist of a canister filled with activated charcoal and connected by hoses to the fuel system. The hoses direct generated vapors to the canister, which collects the vapors on the carbon and stores them until the system experiences a ''purge'' event. During purge, the engine draws fresh air through the canister, carrying vapors released by the carbon to the engine to be combusted and restoring the capacity of the canister. Evaporative emissions occur when vapors are emitted to the atmosphere because the evap system is compromised, the carbon canister is overwhelmed, or vapors permeate or leak. As such, evaporative emission controls also involve proper material selection for fuel system components, careful design of these components, and onboard diagnostics to check the system for failure.

2. How would the proposed changes to gasoline sulfur content affect vehicle emissions?

Gasoline vehicles depend to a great degree on catalytic converters to reduce levels of pollutants in their exhaust, including NMOG and NO_X, as well as PM (specifically, the volatile hydrocarbon fraction), CO, and most air toxics. The presence of sulfur in gasoline has a strong impact on these emissions, particularly NO_X, due to its impact on proper catalyst operation.

Sulfur naturally occurs in crude oil and thus in gasoline. In vehicle catalytic converters, the precious metals that catalyze the reactions that convert the pollutants become significantly less efficient when sulfur is deposited (adsorbed) onto them. The Tier 2 rulemaking required refiners to take steps to reduce sulfur levels in gasoline by approximately 90 percent, to an average of 30 ppm. At the time there were indications that sulfur reductions below 30 ppm may continue to provide additional emission benefits. However, the data was insufficient to quantify the benefits to the existing fleet, and the Tier 2 vehicle standards could be achieved without lowering sulfur further. As a result, to minimize the cost of the Tier 2 program, the sulfur standard was not further reduced below 30 ppm.

As discussed in Section IV.A.6, subsequent research provides a compelling case that even this level of sulfur degrades the emission performance of vehicles on the road today, and inhibits necessary further reductions in vehicle emissions performance, which depend on optimum catalyst performance to reach emission targets. A study conducted by EPA and the auto industry in support of the Mobile Source Air Toxics (MSAT) rule found significant reductions in NO_X, CO and total HC when nine Tier 2 vehicles were tested on low sulfur fuel, relative to 32-ppm fuel.[181] In particular, the study found a nearly 50 percent increase in NO_X when sulfur was increased from 6 ppm to 32 ppm. Another recent study by Umicore showed reductions of 41 percent for NO_X and 17 percent for HC on a PZEV operating on fuel with 33-ppm and 3-ppm fuel.[182]

A larger study recently completed by EPA confirmed these results, showing significant reductions in FTP-composite NO_X (23 percent), CO (12 percent) and total HC (13 percent) on the 5-ppm fuel, relative to 28-ppm fuel. For NO_X, the majority of overall reductions were driven by large reductions on warmed-up periods of the test cycle (Bag 2), which showed a 59 percent reduction between 28 and 5-ppm fuel, consistent with the role of sulfur in catalyst degradation discussed above. Applying individual bag reductions to in-use activity patterns from EPA emission models suggests an overall NO_X reduction of nearly 40 percent on the road.

Based on these studies, the benefits of the proposed Tier 3 sulfur standard are significant in two ways: they enable vehicles designed to the proposed Tier 3 tailpipe exhaust standards to meet these standards for the duration of their useful life, and they facilitate immediate emission reductions from all the vehicles on the road at the time the sulfur controls are implemented.

B. How would emissions be reduced?

The proposed standards would reduce emissions of VOC, NO_X (including NO_2), direct $PM_{2.5}$, CO, SO_2, and air toxics. The proposed sulfur standards would reduce emissions from the on-road fleet immediately upon implementation, so to reflect these early reductions, we present emission reductions in calendar year 2017. The proposed vehicle standards would begin to reduce emissions as the cleaner cars and trucks begin to enter the fleet in model year 2017. The magnitude of reduction would grow as more Tier 3 vehicles enter the fleet. Therefore, we also present emission reductions in calendar year 2030, when model year 2017 and later cars and trucks contribute nearly 90 percent of fleet-wide vehicle miles travelled. Although 2030 is the farthest year that is feasible for air quality modeling, the full reduction of the vehicle program would be realized after 2030, when the fleet has fully turned over to Tier 3 vehicles. In Chapter 7 of the RIA, we present emission reductions projected in 2050, as well as additional calendar years between 2017 and 2030.

Emission reductions are estimated on an annual basis, for all 50 U.S. states

[181] Regulatory Impact Analysis for the Control of Hazardous Air Pollutants from Mobile Sources Final Rule, EPA 420–R–07–002, Chapter 6.

[182] Ball D., Clark D., Moser D. (2011). *Effects of Fuel Sulfur on FTP NOx Emissions from a PZEV 4 Cylinder Application.* SAE 2011 World Congress Paper 2011–01–0300.

plus the District of Columbia, Puerto Rico and the U.S. Virgin Islands. The reductions were estimated using a version of EPA's MOVES model updated for this analysis, as described in detail in Chapter 7 of the RIA. This version of MOVES includes our most recent data on how vehicle emissions are affected by changes in sulfur, ethanol, and other fuel properties. We estimated emission reductions compared to a reference case that assumed partial RFS2 implementation by 2017, with full implementation in 2022 and beyond. The ethanol scenarios used for the reference and control cases were the ''post-EPAct/EISA'' scenario defined in Chapter 7 of the RIA, reflecting a mix of E10 and E15 in 2017, and E15 only in 2030. The reference case also assumed continuation of the Tier 2 vehicle program indefinitely, and an average sulfur level of 30 ppm (10 ppm in California).

As discussed throughout this preamble, implementation of the proposed Tier 3 standards is aligned with the 2017 LD GHG standards to achieve significant criteria pollutant and GHG emissions reductions while providing regulatory certainty and compliance efficiency to the auto and oil industries. The 2017 LD GHG standards were still in a preliminary state of development (pre-proposal) at the time we finalized our assumptions for the Tier 3 emissions, air quality, and cost analyses, so we were not able to reflect them in these analyses. However, we continue to expect vehicle criteria pollutant performance to be neutral under the GHG program, because exhaust and evaporative emissions are not proportional to the amount of fuel burned; rather, our standards are expressed on a per-mile basis, not on a per-gallon basis. Vehicle criteria emissions are almost exclusively controlled by a vehicle's emissions aftertreatment system and not by the efficiency of the engine.

The majority of the NMOG that is emitted from a gasoline engine is generated during cold start, before the catalyst is lit off, and NO_X is often created during higher load operation. Optimizing catalyst efficiency, minimizing thermal parasitics, minimizing fuel system leaks, and lower gasoline sulfur will be key enablers for all vehicles to meet the Tier 3 standards, regardless of the vehicle's fuel efficiency. Because we do not expect the increase in fuel efficiency to result in lower criteria pollutant emissions, we did not claim in the 2017 LD GHG rule any reductions attributable to the ability of vehicles to meet lower criteria emission levels (see 77 FR 62899–62901, October 15, 2012). In other words, in the 2017 LD GHG rule, we assumed that, absent the proposed Tier 3 standards, the light-duty fleet would continue to meet the Tier 2 standards. Thus, we believe that the inclusion of the light-duty GHG standards in our cost and benefit analyses for the proposed Tier 3 standards would have had little or no impact on the results or our conclusions, as discussed in Sections 7.1.2 and 7.1.3.2.1 of the draft RIA. Nevertheless, for the final rulemaking we will include the LD GHG requirements in the analysis.

The analysis described here does account for the following national onroad rules:

- Tier 2 Motor Vehicle Emissions Standards and Gasoline Sulfur Control Requirements (65 FR 6698, February 10, 2000)
- Heavy-Duty Engine and Vehicle Standards and Highway Diesel Fuel Sulfur Control Requirements (66 FR 5002, January 18, 2001)
- Mobile Source Air Toxics Rule (72 FR 8428, February 26, 2007)
- Regulation of Fuels and Fuel Additives: Changes to Renewable Fuel Standard Program (75 FR 14670, March 26, 2010)
- Light-Duty Vehicle Greenhouse Gas Emission Standards and Corporate Average Fuel Economy Standards for 2012–2016 (75 FR 25324, May 7, 2010)

The analysis also accounts for many other national rules and standards. In addition, the modeling accounts for state and local rules including local fuel standards, Inspection/Maintenance programs, Stage II refueling controls, the National Low Emission Vehicle Program (NLEV), and the section 177 states LEV and LEVII programs. See the Tier 3 emissions modeling TSD for more detail.

A summary of emission reductions projected to result from Tier 3, relative to the reference case, is shown in calendar years 2017 and 2030 for NO_X, VOC, direct $PM_{2.5}$, CO, SO_2, and total air toxics in Table III–1. For many pollutants, the immediate reductions in 2017 are significant; for example, combined NO_X and VOC emissions would be reduced by over 300,000 tons. By 2030, combined NO_X and VOC emissions would be reduced by roughly 750,000 tons, one quarter of the onroad inventory. Many of the modeled air toxics would be significantly reduced as well, including benzene, 1,3-butadiene, acetaldehyde, acrolein and ethanol (ranging from 20 to nearly 40 percent of the national onroad inventory by 2030). The relative reduction in overall emissions would continue to increase beyond 2030 as more of the fleet continues to turn over to Tier 3 vehicles; for example, by 2050, when nearly all of the fleet would have turned over to Tier 3 standards, we estimate the Tier 3 program would reduce onroad emissions of NO_X and VOC nearly 40 percent from the level of emissions projected without Tier 3 controls.

TABLE III–1—ESTIMATED EMISSION REDUCTIONS FROM THE PROPOSED TIER 3 STANDARDS

[Annual U.S. short tons] [a]

	2017		2030	
	Tons	Percent of onroad inventory	Tons	Percent of onroad inventory
NO_X	284,381	8	524,790	28
VOC	44,782	3	226,028	23
CO	746,683	4	5,765,362	30
Direct $PM_{2.5}$	121	0.1	7,458	10
Benzene	1,625	4	8,582	36
SO_2	16,261	51	17,267	51
1,3-Butadiene	322	5	1,087	37
Formaldehyde	727	3	2,707	12
Acetaldehyde	762	3	4,414	26
Acrolein	23	1	184	15

TABLE III–1—ESTIMATED EMISSION REDUCTIONS FROM THE PROPOSED TIER 3 STANDARDS—Continued

[Annual U.S. short tons] [a]

	2017		2030	
	Tons	Percent of onroad inventory	Tons	Percent of onroad inventory
Ethanol	2,684	2	27,821	24

[a] This analysis assumed emissions reductions from the Tier 3 vehicle standards would occur in all states. For the final rule we will account for LEV III vehicle standards in states that have subsequently adopted it.

Reductions for each pollutant are discussed in the following sections, focusing on the contribution of program elements to the total reductions summarized above.

1. NO_X

The proposed sulfur standards would significantly reduce NO_X emissions immediately upon implementation of the program. As discussed above, recent research on the impact of sulfur on Tier 2 technology vehicles shows the potential for significant reductions in NO_X emissions from the existing fleet of Tier 2 vehicles by lowering sulfur levels to 10 ppm. Prior research shows that NO_X emissions would also be expected to decrease from the fleet of older (pre-Tier 2) light-duty vehicles as well as heavy-duty gasoline vehicles,[183] although at to a lesser extent than for Tier 2 vehicles.

Table III–2 shows the reduction in NO_X emissions, in annual short tons, projected in calendar years 2017 and 2030. The reductions are split into those attributable to the introduction of low sulfur fuel in the pre-Tier 3 fleet (defined for this analysis as model years prior to 2017); and reductions attributable to vehicle standards enabled by low sulfur fuel (model year 2017 and later). As shown, upon implementation of the proposed sulfur standards, total onroad NO_X emissions are projected to drop 8 percent. This is primarily due to large reductions from Tier 2 gasoline vehicles, which contribute about one-quarter of the NO_X emissions from the on-road fleet in 2017. The relative reduction grows as cleaner vehicles turn over into the fleet. By 2030, we project that the reduction in overall onroad NO_X inventory would be close to 30 percent.

TABLE III–2—PROJECTED NO_X REDUCTIONS FROM TIER 3 PROGRAM

[Annual U.S. Tons] [a]

	2017	2030
Total reduction	284,381	524,790
Reduction from pre-Tier 3 fleet due to sulfur standard	*264,653*	*66,286*
Reduction from Tier 3 fleet due to vehicle and sulfur standards	*19,728*	*458,504*
Percent reduction in onroad NO_X emissions	8%	28%

[a] This analysis assumed emissions reductions from the Tier 3 vehicle standards would occur in all states. For the final rule we will account for LEV III vehicle standards in states that have subsequently adopted it.

2. VOC

Table III–3 shows the reduction in VOC emissions, in annual short tons, projected in calendar years 2017 and 2030 resulting from the proposed standards. In 2017, as with NO_X, we project reductions from the pre-Tier 3 fleet with the proposed fuel standards. By 2030 the reduction in overall onroad VOC emissions would be over 20 percent, the majority of this from the Tier 3 fleet. The proposed evaporative standards are projected to account for roughly one quarter of the overall vehicle program reduction in 2030.

TABLE III–3—PROJECTED VOC REDUCTIONS FROM TIER 3 PROGRAM

[Annual U.S. tons] [a]

	2017	2030
Total reduction	44,782	226,028
Reduction from pre-Tier 3 fleet due to sulfur standard	39,561	13,739
Reduction from Tier 3 fleet due to vehicle and sulfur standards	5,222	212,289
Exhaust	*41,433*	*168,264*
Evaporative	*3,349*	*57,764*
Percent reduction in onroad VOC emissions	3%	23%

[a] This analysis assumed emissions reductions from the Tier 3 vehicle standards would occur in all states. For the final rule we will account for LEV III vehicle standards in states that have subsequently adopted it.

[183] Rao, V. (2001) *Fuel Sulfur Effects on Exhaust Emissions: Recommendations for MOBILE6,* EPA420–R–01–039.

3. CO

Table III–4 shows the reductions for CO, broken down by pre- and post-Tier 3 in the manner described for NO_X and VOC above. Based on research showing sizeable CO reductions from lower sulfur fuel, the immediate reductions in the onroad fleet from sulfur control are also significant. The CO exhaust standards are projected to reduce onroad CO emissions 30 percent by 2030.

TABLE III–4—PROJECTED CO REDUCTIONS FROM TIER 3 PROGRAM

[Annual U.S. tons]

	2017	2030
Total reduction	746,683	5,765,362
Reduction from pre-Tier 3 fleet due to sulfur standard	608,502	139,074
Reduction from Tier 3 fleet due to vehicle and sulfur standards	138,181	5,626,288
Percent reduction in onroad CO emissions	4%	30%

[a] This analysis assumed emissions reductions from the Tier 3 vehicle standards would occur in all states. For the final rule we will account for LEV III vehicle standards in states that have subsequently adopted it.

4. Direct $PM_{2.5}$

Reductions in direct emissions of $PM_{2.5}$ are projected to result solely from the proposed vehicle tailpipe standards, so meaningful reductions are realized mainly as the fleet turns over. By 2030, we project a reduction of about 7,500 tons annually, which represents approximately 10 percent of the onroad direct $PM_{2.5}$ inventory. However, since the PM standards are mainly focused on improving engine durability through the end of a vehicle's useful life, the relative reduction in onroad emissions is projected to grow to 17 percent with full fleet turnover in 2050. Reductions in NO_X and VOC emissions would also reduce secondary PM formation, which is quantified as part of the air quality analysis described in Section III.C.

5. Air Toxics

Emissions of air toxics also would be reduced by the proposed sulfur, exhaust and evaporative standards. Air toxics are generally a subset of compounds making up VOC, so the reduction trends tend to track the VOC reductions presented above. Table III–5 presents reductions for certain key air toxics, and Table III–6 presents reductions for the sum of 71 different toxic compounds.

TABLE III–5—REDUCTIONS FOR CERTAIN INDIVIDUAL COMPOUNDS

[Annual U.S. tons]

	Tons reduced in 2017	Percent reduction in onroad emissions	Tons reduced in 2030	Percent reduction in onroad emissions
Acetaldehyde	762	3	4,414	26
Formaldehyde	727	3	2,707	12
Acrolein	23	1	184	15
1,3-Butadiene	322	5	1,087	37
Benzene	1,625	4	8,581	36
Naphthalene	96	2	420	17
Ethanol	2,684	2	27,821	24

[a] This analysis assumed emissions reductions from the Tier 3 vehicle standards would occur in all states. For the final rule we will account for LEV III vehicle standards in states that have subsequently adopted it.

The totals shown in Table III–6 represent the sum of 71 species including the toxics in Table III–5, 15 polycyclic aromatic hydrocarbon (PAH) compounds in gas and particle phase, and additional gaseous compounds such as toluene, xylenes, styrene, hexane, 2,2,4-trimethylpentane, n-hexane, and propionaldehyde (Appendix 7A in the draft RIA). As shown, in 2030 the overall onroad inventory of total toxics would be reduced by over 20 percent, with nearly one third of the vehicle program reductions coming from the proposed evaporative standards.

TABLE III–6—REDUCTIONS IN TOTAL MOBILE SOURCE AIR TOXICS

[Annual U.S. Tons]

	2017	2030
Total reduction	15,156	89,685
Reduction from pre-Tier 3 fleet due to sulfur standard	12,452	5,022
Reduction from Tier 3 fleet due to vehicle and sulfur standards	2,683	84,663
Exhaust	*13,748*	*64,144*
Evaporative	*1,408*	*25,541*
Percent reduction in onroad toxics emissions	3%	23%

[a] This analysis assumed emissions reductions from the Tier 3 vehicle standards would occur in all states. For the final rule we will account for LEV III vehicle standards in states that have subsequently adopted it.

6. SO_2

SO_2 emissions from mobile sources are a direct function of sulfur in the fuel, and reducing sulfur in gasoline would result in immediate reductions in SO_2 from the on and off-road fleet. The reductions, shown in Table III–7, are a function of the sulfur level and fuel consumption. This is reflected in the relative contribution of on-road vehicles and off-road equipment, where off-road gasoline consumption accounts for approximately 5 percent of overall gasoline use.[184]

TABLE III–7—PROJECTED SO_2 REDUCTIONS FROM TIER 3 PROGRAM

[Annual U.S. Tons]

	2017	2030
Total reduction	16,261	17,267
Reduction from onroad vehicles due to sulfur standard	15,494	16,370
Reduction from off-road equipment due to sulfur standard	767	897
Percent reduction in onroad SO_2 emissions	51%	51%

7. Greenhouse Gases

Reductions in nitrous oxide (N_2O) emissions and methane (CH_4) emissions, both potent greenhouse gas emissions, are projected for gasoline cars and trucks due to the proposed sulfur and tailpipe standards. A study conducted by the University of California at Riverside found a 29 percent reduction in N_2O emissions over the FTP when sulfur was reduced from 30 to 5 ppm,[185] while EPA research described in Section IV.A on sulfur effects found a 25 percent reduction in CH_4 emissions when sulfur was reduced from 28 to 5 ppm. Several studies have established correlations between reductions in tailpipe NO_X emissions and reductions in N_2O from gasoline cars and trucks,[186] [187] [188] as well as correlations between reductions in tailpipe HC emissions and reductions in CH_4.[189] [190] One such study (Behrentz et al.) reported an N_2O: NO_X ratio of 0.095 ± 0.035, and supported the application of N_2O: NO_X ratios to NO_X emissions as a reasonable method for estimating N_2O emission inventories. As detailed in RIA Chapter 7.3, a range of N_2O reductions is bounded by applying this ratio to NO_X reductions projected for this proposal (from Table III–1), and applying the UC Riverside sulfur results to MOVES N_2O inventories for pre-Tier 3 vehicles. Using a 100-year global warming potential of 298 for N_2O according to the 2007 IPCC AR4,[191] the range of reductions calculated for N_2O is from 2.9 to 7.3 million metric tons of carbon dioxide equivalent ($MMTCO_2e$) in 2017, growing to 12.3 to 13.5 $MMTCO_2e$ in 2030. MOVES can be used to directly estimate CH_4 reductions from the sulfur and vehicle standards, estimating an additional 0.1 $MMTCO_2e$ reduction in 2017, growing to 0.5 MMTCO2e in 2030. The range of total GHG reductions from the Tier 3 rule is 3.0 to 7.4 $MMTCO_2e$ in 2017, growing to 12.8 to 14.0 $MMTCO_2e$ in 2030.

These reductions would be offset to some degree by CO_2 emissions associated with higher energy use required in the process of removing sulfur within the refinery. To assess the potential refinery permitting implications of the Tier 3 proposal, we calculated the CO_2 emission impacts on a refinery-by-refinery basis. We used the projected refinery-specific changes from our refinery-by-refinery modeling (see Chapter 5 of the draft RIA) to estimate changes in process energy and then applied emission factors that correspond to those changes. The results showed an increase of up to 4.6 $MMTCO_2e$ in 2017 for all U.S. refineries complying with the lower sulfur standards assuming that the proposed sulfur standards are fully phased-in.[192] The actual increase is expected to be considerably lower, since this is a permitting analysis and refineries will not be operating at their permit capacity. The actual increase will also be a function of several factors, including technology options selected by the refineries and the projected use of averaging, banking and trading in avoiding the need for investments at some refineries. As a result, 4.6 $MMTCO_2e$ represents an upper-bound estimate of the possible increase in refinery CO_2 emissions due to the need for additional process heat and hydrogen production to enable the additional hydrotreating required.

In 2017, the range of potential decrease in CH_4 and N_2O emissions overlaps with the range of projected increase in CO_2 from refinery processes, suggesting that a net increase or decrease in GHG emissions cannot be quantified with certainty. However, we estimate the program would result in net GHG reductions as the program continues into the future, as shown by our 2030 estimates.

We do not expect the Tier 3 vehicle standards to result in any discernible changes in vehicle CO_2 emissions or fuel economy. Emissions of the pollutants that we have designed the program to address—NMOG, NO_X, and PM—are not a function of the amount of fuel consumed, since manufacturers need to design their catalytic emission control systems to reduce these emissions regardless of their engine-out levels. However, there may be some slight reduction of vehicle mass if manufacturers explore lighter exhaust manifold materials in order to reduce thermal mass and promote earlier catalyst light-off. EPA invites comments on any potential impacts of the proposed Tier 3 program on vehicle CO_2 emissions and fuel economy.

[184] U.S. Energy Information Administration (2011), *Annual Energy Outlook 2011,* DOE/EIA–0383 (2011).

[185] Huai, et al. (2004) *Estimates of the emission rates of nitrous oxide from light-duty vehicles using different chassis dynamometer test cycles* Atmospheric Environment 6621–6629.

[186] Michaels, H. (1998) *Emissions of Nitrous Oxide from Highway Mobile Sources,* U.S. EPA EPA420–R–98–009.

[187] Behrentz, et al. (2004), *Measurements of nitrous oxide emissions from light-duty motor vehicles: a pilot study* Atmospheric Environment 4291–4303.

[188] Meffert, et. al (2000) *Analysis of Nitrous Oxide Emissions from Light Duty Passenger Cars,* SAE 2000–01–1952.

[189] Meszler, D. (2004), *Light Duty Vehicle Methane and Nitrous Oxide Emissions: Greenhouse Gas Impacts* Study for Northeast States Center for a Clean Air Future.

[190] Graham, L. *Greenhouse Gas Emissions from 1997–2005 Model Year Light Duty Vehicles Environment Canada* ERMD Report #04–44.

[191] The global warming potentials (GWP) used in this rule are consistent with the 100-year time frame values in the 2007 Intergovernmental Panel on Climate Change (IPCC) Fourth Assessment Report (AR4). At this time, the 1996 IPCC Second Assessment Report (SAR) 100-year GWP values are used in the official U.S. greenhouse gas inventory submission to the United Nations Framework Convention on Climate Change (per the reporting requirements under that international convention, which were last updated in 2006). N_2O has a 100-year GWP of 298 and CH_4 has a 100-year GWP of 25 according to the 2007 IPCC AR4.

[192] Keller, P. (February, 2013). New Source Review Permitting Impact Analysis for Proposed Tier 3 Gasoline Program. Memorandum to the docket.

C. How would air pollution be reduced?

Reductions in emissions of NO_X, VOC, $PM_{2.5}$ and air toxics expected as a result of the proposed Tier 3 standards are projected to lead to significant decreases in ambient concentrations of ozone, $PM_{2.5}$, and air toxics. The results of our air quality modeling of the impacts of the Tier 3 proposal are summarized in the following section. The air quality modeling predicts significant improvements in ozone concentrations due to the proposed Tier 3 standards. Ambient $PM_{2.5}$ and NO_2 concentrations are also expected to improve as a result of the proposed Tier 3 program. Decreases in ambient concentrations of air toxics are projected with the proposed standards, including notable nationwide reductions in benzene concentrations. Our air quality modeling also predicts improvements in visibility and sulfur deposition, as well as substantial decreases in nitrogen deposition as a result of the proposed standards.

1. Ozone

The air quality modeling done for this proposal projects that in 2017, with all current controls in effect but excluding the emissions changes expected to occur as a result of this proposed action or any other additional controls, at least 40 counties, with a projected population of almost 50 million people, would have projected design values above the level of the 2008 8-hour ozone standard of 75 ppb. Even in 2030 the modeling projects that in the absence of additional controls there would be 12 counties with a population of almost 32 million people with projected design values above the level of the 2008 8-hour ozone standard of 75 ppb. Since the emission changes from this proposal go into effect during the period when some areas are still working to attain the ozone NAAQS, the projected emission changes would help state and local agencies in their effort to attain and maintain the ozone standard.

Air quality modeling indicates ozone design value concentrations would decrease dramatically in many areas of the country as a result of this action and in some places those decreases would be enough to change the projected design values from being above the NAAQS to being below the NAAQS. The decreases in ozone design values are likely due to projected tailpipe reductions in NO_X and VOCs from reductions in fuel sulfur and engine controls.

In 2017, the majority of the design value decreases are between 0.5 and 1.0 ppb. The projected population-weighted average design value concentration without the proposed rule is 71.3 ppb in 2017. The proposed rule would also reduce the projected ozone design values in three counties from above the level of the standard to below. These three counties are Bucks County in Pennsylvania, Arlington County in Virginia and St Louis County in Missouri. The projected population in these three counties in 2017 is almost 2 million people. In 2030, the proposed rule would result in larger decreases in ozone design values, with the majority of counties projecting decreases of between 1.0 and 1.5 ppb, and over 200 more counties with decreases greater than 1.5 ppb. The projected population-weighted average design value concentration without the proposed rule is 66.7 ppb in 2030. There are also two more counties whose projected design values would be reduced from above the level of the ozone standard to below by the proposed rule in 2030. These counties are Hudson County in New Jersey and Brazoria County in Texas. The projected population in these two counties in 2030 is over 1 million people.

Table III–8 and Table III–9 show the average change in 2017 and 2030 8-hour ozone design values for: (1) All counties with 2005 baseline design values, (2) counties with 2005 baseline design values that exceeded the 2008 ozone standard, (3) counties with 2005 baseline design values that did not exceed the 2008 standard, but were within 10 percent of it, (4) counties with 2017/2030 design values that exceeded the 2008 ozone standard, and (5) counties with 2017/2030 design values that did not exceed the standard, but were within 10 percent of it. Counties within 10 percent of the standard are intended to reflect counties that although not violating the standards, will also be impacted by changes in ozone as they work to ensure long-term maintenance of the ozone NAAQS. All of these metrics show a decrease in 2017 and 2030, indicating in five different ways the overall improvement in air quality.

On a population-weighted basis, the average modeled future-year 8-hour ozone design values are projected to decrease by 0.47 ppb in 2017 and 1.55 ppb in 2030. On a population-weighted basis design values in those counties that are projected to be above the 2008 ozone standard in 2017 and 2030 are projected to decrease by 0.30 and 1.62 ppb respectively due to the proposed standards.

TABLE III–8—AVERAGE CHANGE IN PROJECTED 8-HOUR OZONE DESIGN VALUE IN 2017 [c]

Average [a]	Number of U.S. counties	2020 population [b]	Change in 2017 design value (ppb)
All	676	238,026,106	−0.50
All, population-weighted			−0.47
Counties whose 2005 base year is violating the 2008 8-hour ozone standard	393	176,910,535	−0.56
Counties whose 2005 base year is violating the 2008 8-hour ozone standard, population-weighted			−0.51
Counties whose 2005 base year is within 10 percent of the 2008 8-hour ozone standard	201	40,516,171	−0.47
Counties whose 2005 base year is within 10 percent of the 2008 8-hour ozone standard, population-weighted			−0.42
Counties whose 2017 control case is violating the 2008 8-hour ozone standard	37	47,659,433	−0.35
Counties whose 2017 control case is violating the 2008 8-hour ozone standard, population-weighted			−0.30
Counties whose 2017 control case is within 10 percent of the 2008 8-hour ozone standard	124	68,625,934	−0.51
Counties whose 2017 control case is within 10 percent of the 2008 8-hour ozone standard, population-weighted			−0.49

[a] Averages are over counties with 2005 modeled design values.
[b] Population numbers based on Woods & Poole data. Woods & Poole Economics, Inc. 2001. Population by Single Year of Age CD.
[c] This analysis assumed emissions reductions from Tier 3 vehicle standards would occur in all states and did not account for emission reductions associated with LEV III vehicle standards in California and other states that have subsequently adopted it. The analysis for the final rule will account for LEV III vehicle standards.

TABLE III–9—AVERAGE CHANGE IN PROJECTED 8-HOUR OZONE DESIGN VALUE IN 2030 [c]

Average [a]	Number of U.S. counties	2030 population [b]	Change in 2030 design value (ppb)
All	676	261,497,900	−1.35
All, population-weighted			−1.55
Counties whose 2005 base year is violating the 2008 8-hour ozone standard	393	194,118,748	−1.54
Counties whose 2005 base year is violating the 2008 8-hour ozone standard, population-weighted			−1.69
Counties whose 2005 base year is within 10 percent of the 2008 8-hour ozone standard	201	44,436,103	−1.18
Counties whose 2005 base year is within 10 percent of the 2008 8-hour ozone standard, population-weighted			−1.25
Counties whose 2030 control case is violating the 2008 8-hour ozone standard	10	30,619,714	−1.49
Counties whose 2030 control case is violating the 2008 8-hour ozone standard, population-weighted			−1.62
Counties whose 2030 control case is within 10 percent of the 2008 8-hour ozone standard	40	21,541,863	−1.37
Counties whose 2030 control case is within 10 percent of the 2008 8-hour ozone standard, population-weighted			−1.50

[a] Averages are over counties with 2005 modeled design values.
[b] Population numbers based on Woods & Poole data. Woods & Poole Economics, Inc. 2001. Population by Single Year of Age CD.
[c] This analysis assumed emissions reductions from Tier 3 vehicle standards would occur in all states and did not account for emission reductions associated with LEV III vehicle standards in California and other states that have subsequently adopted it. The analysis for the final rule will account for LEV III vehicle standards.

2. Particulate Matter

The air quality modeling conducted for this proposal projects that in 2030, with all current controls in effect but excluding the emissions changes expected to occur as a result of this proposal or any other additional controls, at least 14 counties, with a projected population of over 28 million people, would have projected design values above the level of the annual standard of 12 μg/m^3 and at least 21 counties, with a projected population of over 31 million people, would have projected design values above the level of the 24-hour standard of 35 μg/m^3.[193] Since the emission changes from this proposed action would go into effect during the period when some areas are still working to attain the $PM_{2.5}$ NAAQS, the projected emission changes would be useful to state and local agencies in their effort to attain and maintain the $PM_{2.5}$ standard.

The proposed rule would reduce 24-hour and annual $PM_{2.5}$ design values in 2030. Annual $PM_{2.5}$ design values in the majority of modeled counties would decrease by between 0.01 and 0.05 μg/m^3 and in over 100 additional counties design values are projected to decrease by greater than 0.05 μg/m^3. The projected population-weighted average design value concentration without the proposed rule is 9.5 μg/m^3 in 2030. The average modeled future-year annual $PM_{2.5}$ design values in 2030 decrease by 0.06 μg/m^3 on a population-weighted basis. Design values in those counties that are projected to be above the annual $PM_{2.5}$ standard in 2030 decrease even more, by 0.11 μg/m^3 on a population-weighted basis, due to the proposed standards. In addition, the average modeled future-year 24-hour $PM_{2.5}$ design values in 2030 decrease by 0.20 μg/m^3 on a population-weighted basis. The projected population-weighted average design value concentration without the proposed rule is 24.3 μg/m^3 in 2030. The decreases in $PM_{2.5}$ design values are likely due to the projected tailpipe reductions in primary $PM_{2.5}$, NO_X and VOCs. The proposed rule has little impact on $PM_{2.5}$ design values for the majority of counties in 2017, although our air quality modeling underestimated the PM decreases that would result from this proposal (see Section 7.4.2.3 of the draft RIA for more detail).

Table III–10 and Table III–11 present the average change in 2030 annual and 24-hour $PM_{2.5}$ design values for: (1) All counties with 2005 baseline design values, (2) counties with 2005 baseline design values that exceeded the $PM_{2.5}$ standard, (3) counties with 2005 baseline design values that did not exceed the standard, but were within 10 percent of it, (4) counties with 2030 design values that exceeded the $PM_{2.5}$ standard, and (5) counties with 2030 design values that did not exceed the standard, but were within 10 percent of it. Counties within 10 percent of the standard are intended to reflect counties that although not violating the standards, will also be impacted by changes in $PM_{2.5}$ as they work to ensure long-term maintenance of the annual and/or 24-hour $PM_{2.5}$ NAAQS. All of these metrics show a decrease in 2030. On a population-weighted basis, there is a 0.06 μg/m^3 decrease in the average modeled future-year annual $PM_{2.5}$ design values in 2030 and a decrease of 0.11 μg/m^3 in those counties that are projected to be above the annual $PM_{2.5}$ standard in 2030. In addition, the average population-weighted modeled future-year 24-hour $PM_{2.5}$ design values are projected to decrease by 0.20 μg/m^3 due to the proposed standards and design values in those counties that are projected to be above the 24-hour $PM_{2.5}$ standard in 2030 would decrease by 0.32 μg/m^3.

TABLE III–10—AVERAGE CHANGE IN PROJECTED ANNUAL $PM_{2.5}$ DESIGN VALUES IN 2030 [c]

Average [a]	Number of U.S. counties	2030 Population	Change in 2030 design value (μg/m^3)
All	576	247,415,381	−0.05

[193] The projections from the modeling analysis for the Tier 3 proposal differ from what was presented in the recent PM NAAQS RIA (*http://www.epa.gov/pm/actions.html*). The differences in modeling between the analyses stem primarily from the difference in modeling platform and the different years being evaluated (2020 vs. 2030).

TABLE III–10—AVERAGE CHANGE IN PROJECTED ANNUAL $PM_{2.5}$ DESIGN VALUES IN 2030 [c]—Continued

Average [a]	Number of U.S. counties	2030 Population	Change in 2030 design value (μg/m³)
All, population-weighted			−0.06
Counties whose 2005 base year is violating the annual $PM_{2.5}$ standard	314	152,109,569	−0.05
Counties whose 2005 base year is violating the annual $PM_{2.5}$ standard, population-weighted			−0.07
Counties whose 2005 base year is within 10 percent of the annual $PM_{2.5}$ standard	83	31,863,376	−0.05
Counties whose 2005 base year is within 10 percent of the annual $PM_{2.5}$ standard, population-weighted			−0.05
Counties whose 2030 control case is violating the annual $PM_{2.5}$ standard [d]	14	28,624,758	−0.11
Counties whose 2030 control case is violating the annual $PM_{2.5}$ standard, population-weighted [d]			−0.10
Counties whose 2030 control case is within 10 percent of the annual $PM_{2.5}$ standard	28	23,840,272	−0.07
Counties whose 2030 control case is within 10 percent of the annual $PM_{2.5}$ standard, population-weighted			−0.09

[a] Averages are over counties with 2005 modeled design values.
[b] Population numbers based on Woods & Poole data. Woods & Poole Economics, Inc. 2001. Population by Single Year of Age CD.
[c] This analysis assumed emissions reductions from Tier 3 vehicle standards would occur in all states and did not account for emission reductions associated with LEV III vehicle standards in California and other states that have subsequently adopted it. The analysis for the final rule will account for LEV III vehicle standards.
[d] Eight of these counties are in California, see Table 7–35 in the DRIA.

TABLE III–11—AVERAGE CHANGE IN PROJECTED 24-HOUR $PM_{2.5}$ DESIGN VALUES IN 2030 [c]

Average [a]	Number of U.S. counties	2030 Population [b]	Change in 2030 design value (μg/m³)
All	569	245,111,480	−0.16
All, population-weighted			−0.20
Counties whose 2005 base year is violating the 2006 24-hour $PM_{2.5}$ standard	108	91,474,036	−0.29
Counties whose 2005 base year is violating the 2006 24-hour $PM_{2.5}$ standard, population-weighted			−0.27
Counties whose 2005 base year is within 10 percent of the 2006 24-hour $PM_{2.5}$ standard	140	53,990,060	−0.18
Counties whose 2005 base year is within 10 percent of the 2006 24-hour $PM_{2.5}$ standard, population-weighted			−0.21
Counties whose 2030 control case is violating the 2006 24-hour $PM_{2.5}$ standard [d]	21	31,002,272	−0.50
Counties whose 2030 control case is violating the 2006 24-hour $PM_{2.5}$ standard, population-weighted [d]			−0.32
Counties whose 2030 control case is within 10 percent of the 2006 24-hour $PM_{2.5}$ standard	7	4,212,913	−0.37
Counties whose 2030 control case is within 10 percent of the 2006 24-hour $PM_{2.5}$ standard, population-weighted			−0.50

[a] Averages are over counties with 2005 modeled design values.
[b] Population numbers based on Woods & Poole data. Woods & Poole Economics, Inc. 2001. Population by Single Year of Age CD.
[c] This analysis assumed emissions reductions from Tier 3 vehicle standards would occur in all states and did not account for emission reductions associated with LEV III vehicle standards in California and other states that have subsequently adopted it. The analysis for the final rule will account for LEV III vehicle standards.
[d] Eleven of these counties are in California, see Table 7–37 in the DRIA.

3. Nitrogen Dioxide

Although our modeling indicates that by 2030 the majority of the country will experience decreases of less than 0.1 ppb in their annual NO_2 concentrations due to this proposal, annual NO_2 concentrations are projected to decrease by more than 0.3 ppb in most urban areas. These emissions reductions would also likely decrease 1-hour NO_2 concentrations and help any potential nonattainment areas to attain and maintain the standard. Additional information on the emissions reductions that are projected with this proposal is available in Section 7.2.1 of the draft RIA.

4. Air Toxics

Our modeling indicates that the impacts of proposed Tier 3 standards include generally small decreases in ambient concentrations of air toxics, especially in urban areas, with notable nationwide reductions in benzene. Although reductions are greater in 2030 (when Tier 3 cars and trucks would contribute nearly 90 percent of fleet-wide vehicle miles travelled) than in 2017 (the first year of the proposed program), our modeling projects there would be small immediate reductions in ambient concentrations of air toxics due to the proposed sulfur controls in 2017. Furthermore, the full reduction of the vehicle program would be realized after 2030, when the fleet has fully turned over to Tier 3 vehicles. Air toxics pollutants dominated by primary emissions (or a decay product of a directly emitted pollutant) have the largest impacts, rather than air toxics that primarily result from photochemical transformation. Specifically, in 2030, our modeling projects that the proposal would decrease ambient benzene concentrations across much of the country on the order of 1 to 5 percent, with reductions ranging from 10 to 25 percent in some urban areas. Our modeling also shows reductions of 1,3-butadiene and acrolein concentrations in 2030 ranging between 1 and 25 percent, with 1,3-butadiene decreases of at least 0.005 μg/m³ in urban areas. These toxics are national risk drivers and the reductions in ambient

concentrations from this proposed rule would result in reductions in risks from cancer and noncancer health effects. In some parts of the country (mainly urban areas), ethanol and formaldehyde concentrations are projected to decrease on the order of 1 to 5 percent in 2030 as a result of the proposal. Decreases in ethanol concentrations are expected due to reductions in VOC as a result of the proposed standards. Changes in ambient acetaldehyde concentrations are generally less than 1 percent across the U.S., although the proposal may decrease acetaldehyde concentrations in some urban areas by 1 to 2.5 percent in 2030.

Although the reductions in ambient air toxics concentrations expected from the proposed Tier 3 standards are generally small, they are projected to benefit the majority of the U.S. population. As shown in Table III–12, over 80 percent of the total U.S. population is projected to experience a decrease in ambient benzene and acrolein concentrations of at least 2.5 percent, with more than 90 percent of the populations projected to experience 1,3-butadiene concentrations of similar magnitude. Over 80 percent of the U.S population is projected to experience at least a 1 percent decrease in ambient ethanol concentrations, and over 60 percent would experience a similar decrease in ambient formaldehyde concentrations with the proposed standards.

TABLE III–12—PERCENT OF TOTAL POPULATION EXPERIENCING CHANGES IN ANNUAL AMBIENT CONCENTRATIONS OF TOXIC POLLUTANTS IN 2030 AS A RESULT OF THE PROPOSED STANDARDS [a]

Percent change	Benzene (percent)	Acrolein (percent)	1,3-Butadiene (percent)	Formaldehyde (percent)	Ethanol (percent)	Acetaldehyde (percent)
≤ −50						
> −50 to ≤ −25			0.1			
> −25 to ≤ −10	2.8	0.7	56.8			
> −10 to ≤ −5	23.7	36.8	30.8			
> −5 to ≤ −2.5	54.5	43.7	7.1	1.2	33.0	0.3
> −2.5 to ≤ −1	17.7	15.3	3.4	63.2	55.3	25.1
> −1 to < 1	1.4	3.5	1.7	35.6	11.6	74.6
≥ 1 to < 2.5			0.0			
≥ 2.5 to < 5						
≥ 5 to < 10						
≥ 10 to < 25						
≥ 25 to < 50						
≥ 50						

[a] This analysis assumed emissions reductions from Tier 3 vehicle standards would occur in all states and did not account for emission reductions associated with LEV III vehicle standards in California and other states that have subsequently adopted it. The analysis for the final rule will account for LEV III vehicle standards.

5. Visibility

Air quality modeling conducted for this proposed action was used to project visibility conditions in 139 mandatory class I federal areas across the U.S. The results show that in 2030 all the modeled areas would continue to have annual average deciview levels above background and the proposed rule would improve visibility in all these areas.[194] The average visibility at all modeled mandatory class I federal areas on the 20 percent worst days is projected to improve by 0.04 deciviews, or 0.28 percent, in 2030. Section 7.2.5.5 of the draft RIA contains more detail on the visibility portion of the air quality modeling.

6. Nitrogen and Sulfur Deposition

Our air quality modeling projects substantial decreases in nitrogen deposition as a result of the proposed standards. The standards would result in annual percent decreases of greater than 5 percent in most major urban areas and greater than 7 percent in a few areas. In addition, smaller decreases, in the 1 to 1.5 percent range, would occur over most of the rest of the country. The impacts of the proposed standards on sulfur deposition are smaller, ranging from no change to decreases of over 2 percent in some areas. For maps of 2030 deposition impacts and additional information on these impacts see Section 7.2.5.6 of the draft RIA.

7. Environmental Justice

Environmental justice (EJ) is a principle asserting that all people deserve fair treatment and meaningful involvement with respect to environmental laws, regulations, and policies. EPA seeks to provide the same degree of protection from environmental health hazards for all people. As referenced below, numerous studies have found that some environmental hazards are more prevalent in areas with high population fractions of racial/ethnic minorities and people with low socioeconomic status (SES), as would be expected on the basis of those areas' share of the general population.

As discussed in Section II of this document, concentrations of many air pollutants are elevated near high-traffic roadways. If minority populations and low-income populations disproportionately live near such roads, then an issue of EJ may be present. Such disparities may be due to multiple factors.[195]

People with low SES often live in neighborhoods with multiple stressors and health risk factors, including reduced health insurance coverage rates, higher smoking and drug use rates, limited access to fresh food, visible neighborhood violence, and elevated rates of obesity and some diseases such as asthma, diabetes, and ischemic heart disease. Although questions remain, several studies find stronger associations between air pollution and health in locations with such chronic neighborhood stress, suggesting that populations in these areas may be more susceptible to the effects of air

[194] The level of visibility impairment in an area is based on the light-extinction coefficient and a unitless visibility index, called a ''deciview'', which is used in the valuation of visibility. The deciview metric provides a scale for perceived visual changes over the entire range of conditions, from clear to hazy. Under many scenic conditions, the average person can generally perceive a change of one deciview. The higher the deciview value, the worse the visibility. Thus, an improvement in visibility is a decrease in deciview value.

[195] Depro, B.; Timmins, C. (2008) Mobility and environmental equity: do housing choices determine exposure to air pollution? North Caroline State University Center for Environmental and Resource Economic Policy.

pollution.[196 197 198 199] Household-level stressors such as parental smoking and relationship stress also may increase susceptibility to the adverse effects of air pollution.[200 201]

To address the existing conditions in areas near major roadways, in comparison with other locations, we reviewed existing scholarly literature examining the topic, and conducted our own evaluation of two national datasets: the U.S. Census Bureau's American Housing Survey for calendar year 2009 and the U.S. Department of Education's database of school locations.

Existing publications that address EJ issues generally report that populations living near major roadways (and other types of transportation infrastructure) tend to be composed of larger fractions of nonwhite residents. People living in neighborhoods near such sources of air pollution also tend to be lower in income than people living elsewhere. Numerous studies evaluating the demographics and socioeconomic status of populations or schools near roadways have found that they include a greater percentage of minority residents, as well as lower SES (indicated by variables such as median household income). Locations in these studies include Los Angeles, CA, Seattle, WA, Wayne County, MI, Orange County, FL, and the State of California [202 203 204 205 206 207]

We analyzed two national databases that allowed us to evaluate whether homes and schools were located near a major road. One database, the American Housing Survey (AHS), includes descriptive statistics of over 70,000 housing units across the nation. The study is conducted every two years by the U.S. Census Bureau. We analyzed data from the 2009 AHS. The second database we analyzed was the U.S. Department of Education's Common Core of Data, which includes enrollment and location information for schools across the U.S.

In analyzing the 2009 AHS, we focused on whether or not a housing unit was located within 300 feet of ''4-or-more lane highway, railroad, or airport.'' [208] We analyzed whether there were differences between houses and householders in such locations and those not in them.[209] We found that houses with a nonwhite householder were 22–34 percent more likely to be located within 300 feet of these large transportation facilities, while houses with a Hispanic householder were 17–33 percent more likely. Households near large transportation facilities were, on average, lower in income and educational attainment, more likely to be a rental property and located in an urban area.

In examining schools near major roadways, we examined the Common Core of Data (CCD) from the U.S. Department of Education, which includes information on all public elementary and secondary schools and school districts nationwide.[210] To determine school proximities to major roadways, we used a geographic information system (GIS) to map each school and roadways based on the U.S. Census's TIGER roadway file.[211] We found that minority students were overrepresented at schools within 200 meters of the largest roadways, and that schools within 200 meters of the largest roadways also had higher than expected numbers of students eligible for free or reduced-price lunches. For example, Black students represent 21.57 percent of students at schools located within 200 meters of a primary road, whereas Black students represent 16.62 percent of students in all U.S. schools. Hispanic students represent 30.13 percent of students at schools located within 200 meters of a primary road, whereas Hispanic students represent 21.93 percent of students in all U.S. schools.

Overall, there is substantial evidence that people who live or attend school near major roadways are more likely to be of a minority race, Hispanic ethnicity, and/or low SES. The reduction of near-roadway concentrations of many pollutants, discussed above, is likely to help in mitigating this disparity in racial, ethnic, and economically-based exposures.

IV. Proposed Vehicle Emissions Program

In the more than 10 years since EPA finalized the Tier 2 Vehicle Program, manufacturers of light-duty vehicles have continued to develop a wide range of improved technologies capable of reducing key exhaust emissions, especially hydrocarbons, nitrogen oxides (NO_X), and particulate matter (PM). The California LEV II program has been instrumental in the continuous technology improvements by requiring year after year reductions in fleet average hydrocarbon levels in addition to requiring the introduction of advanced exhaust and evaporative emission controls in partial zero emission vehicles (PZEVs). This progress in vehicle technology has made it possible for manufacturers to achieve

[196] Clougherty, J.E.; Kubzansky, L.D. (2009) A framework for examining social stress and susceptibility to air pollution in respiratory health. Environ Health Perspect 117: 1351–1358. Doi:10.1289/ehp.0900612 [Online at *http://dx.doi.org*].

[197] Clougherty, J.E.; Levy, J.I.; Kubzansky, L.D.; Ryan, P.B.; Franco Suglia, S.; Jacobson Canner, M.; Wright, R.J. (2007) Synergistic effects of traffic-related air pollution and exposure to violence on urban asthma etiology. Environ Health Perspect 115: 1140–1146. doi:10.1289/ehp.9863 [Online at *http://dx.doi.org*].

[198] Finkelstein, M.M.; Jerrett, M.; DeLuca, P.; Finkelstein, N.; Verma, D.K.; Chapman, K.; Sears, M.R. (2003) Relation between income, air pollution and mortality: a cohort study. Canadian Med Assn J 169: 397–402.

[199] Shankardass, K.; McConnell, R.; Jerrett, M.; Milam, J.; Richardson, J.; Berhane, K. (2009) Parental stress increases the effect of traffic-related air pollution on childhood asthma incidence. Proc Natl Acad Sci 106: 12406–12411. doi:10.1073/pnas.0812910106 [Online at *http://dx.doi.org*].

[200] Lewis, A.S.; Sax, S.N.; Wason, S.C.; Campleman, S.L (2011) Non-chemical stressors and cumulative risk assessment: an overview of current initiatives and potential air pollutant interactions. Int J Environ Res Public Health 8: 2020–2073. Doi:10.3390/ijerph8062020 [Online at *http://dx.doi.org*].

[201] Rosa, M.J.; Jung, K.H.; Perzanowski, M.S.; Kelvin, E.A.; Darling, K.W.; Camann, D.E.; Chillrud, S.N.; Whyatt, R.M.; Kinney, P.L.; Perera, F.P.; Miller, R.L (2010) Prenatal exposure to polycyclic aromatic hydrocarbons, environmental tobacco smoke and asthma. Respir Med (In press). doi:10.1016/j.rmed.2010.11.022 [Online at *http://dx.doi.org*].

[202] Marshall, J.D. (2008) Environmental inequality: air pollution exposures in California's South Coast Air Basin.

[203] Su, J.G.; Larson, T.; Gould, T.; Cohen, M.; Buzzelli, M. (2010) Transboundary air pollution and environmental justice: Vancouver and Seattle compared. GeoJournal 57: 595–608. doi:10.1007/s10708–009–9269–6 [Online at *http://dx.doi.org*].

[204] Chakraborty, J.; Zandbergen, P.A. (2007) Children at risk: measuring racial/ethnic disparities in potential exposure to air pollution at school and home. J Epidemiol Community Health 61: 1074–1079. doi: 10.1136/jech.2006.054130 [Online at *http://dx.doi.org*].

[205] Green, R.S.; Smorodinsky, S.; Kim, J.J.; McLaughlin, R.; Ostro, B. (2003) Proximity of California public schools to busy roads. Environ Health Perspect 112: 61–66. doi:10.1289/ehp.6566 [*http://dx.doi.org*].

[206] Wu, Y; Batterman, S.A. (2006) Proximity of schools in Detroit, Michigan to automobile and truck traffic. J Exposure Sci & Environ Epidemiol. doi:10.1038/sj.jes.7500484 [Online at *http://dx.doi.org*].

[207] Su, J.G.; Jerrett, M.; de Nazelle, A.; Wolch, J. (2011) Does exposure to air pollution in urban parks have socioeconomic, racial, or ethnic gradients? Environ Res 111: 319–328.

[208] This variable primarily represents roadway proximity. According to the Central Intelligence Agency's World Factbook, in 2010, the United States had 6,506,204 km or roadways, 224,792 km of railways, and 15,079 airports. As such, highways represent the overwhelming majority of transportation facilities described by this factor in the AHS.

[209] Bailey, C. (2011) Demographic and Social Patterns in Housing Units Near Large Highways and other Transportation Sources. Memorandum to docket.

[210] *http://nces.ed.gov/ccd/*.

[211] Pedde, M.; Bailey, C. (2011) Identification of Schools within 200 Meters of U.S. Primary and Secondary Roads. Memorandum to the docket.

emission reductions well beyond the requirements of the Tier 2 program if gasoline sulfur levels are lowered further.

Extensive data from existing Tier 2 (and California LEV II) vehicles show the opportunity for further reductions, especially in addressing emissions produced at start-up, emissions under high-speed, high-load conditions, the effects of sulfur in gasoline, the effects of increased oil consumption, and the effects of vehicle and control systems age. For these reasons, we are proposing more stringent standards designed to reduce emissions, primarily non-methane organic gases (NMOG), NO_X, and PM from new vehicles. As discussed in detail below and in the draft RIA, we have concluded that, in conjunction with the reductions in fuel sulfur proposed in this action, the proposed vehicle emissions standards are feasible and cost-effective across the fleet in the proposed timeframe. We believe that simultaneous reductions in fuel sulfur would be a key factor in enabling the entire fleet of light-duty vehicles to meet the proposed emission standards in-use, throughout the life of the vehicle.

This section describes in detail the proposed program for reducing tailpipe and evaporative emissions from light-duty vehicles (LDVs, or passenger cars), light-duty trucks (LDT1s, 2s, 3s, and 4s), Medium-Duty Passenger Vehicles (MDPVs), and heavy-duty vehicles (HDVs). Sections IV.A and B discuss the proposed tailpipe emission standards and time lines, and other provisions for new light-duty vehicles and MDPVs and for new heavy-duty vehicles up to 14,000 lbs Gross Vehicle Weight Rating (GVWR). Section IV.C presents the proposed evaporative emissions standards and program as well as proposed improvements to the existing Onboard Diagnostics (OBD) provisions. In Section IV.D, we describe our proposal to update our federal certification fuel to better match today's in-use fuel and to be forward-looking with respect to potential future gasoline ethanol and sulfur content. We also discuss in this section proposed compliance flexibilities for small companies and small-volume manufacturers (IV.E) and test procedure and other compliance provisions (IV.F).

A. Tailpipe Emission Standards for Light-Duty Vehicles, Light-Duty Trucks, and Medium-Duty Passenger Vehicles

1. Overview

The proposed Tier 3 standards are very similar in structure to those in the Tier 2 program. As with the Tier 2 program, the proposed standards would apply to all LDVs and LDTs below 8,500 lbs GVWR, and MDPVs (8,500 to 10,000 lbs GVWR). (We discuss the proposed standards for heavy-duty vehicles up to 14,000 lbs GVWR other than MDPVs, in Section IV.B below.) Also as with Tier 2, manufacturers would select from several ''bins'' of emission standards such that the average of their vehicles' emissions complies with the proposed fleet-average standards.

In the discussions of the various elements of our proposed program for light- and heavy-duty vehicles throughout this preamble, we describe how the provisions would be consistent with the California Air Resources Board (CARB) LEV III program.[212] Auto manufacturers have stressed to us the importance of their being able to design and produce a single fleet of vehicles in all 50 states that would comply with requirements under the Tier 3 program and the LEV III program, as well as greenhouse gas/CAFE requirements in the same timeframe. Consistency among the federal and California programs means that special versions of vehicles with different emission control hardware and calibrations would not be necessary for different geographic areas. This would allow manufacturers to avoid the additional costs of parallel design, development, calibration, and manufacturing. Consistency among programs would also eliminate the need to supply aftermarket parts for repair of multiple versions of a vehicle. We believe that the most cost-effective national program will result from close coordination of CARB LEV III and federal Tier 3 program elements and their implementation. To that end, we worked closely with CARB and the vehicle manufacturers, both individually and through their trade associations, to align the two programs.

The Tier 3 program we are proposing is identical to LEV III in most major respects for both light-duty and heavy-duty vehicle exhaust and evaporative emissions requirements, as discussed in detail below in this section. The levels and the timing of the light-duty and heavy-duty declining fleet-average NMOG+NOx standards that we are proposing would be identical to those in LEV III. Also, the Tier 3 emissions bins to which manufacturers would certify individual vehicle models in order to comply with the average standards, for both light- and heavy-duty vehicles, would also be identical to those in LEV III. Similarly, the proposed Tier 3 per-vehicle PM standards match LEV III standards through MY 2024. In addition, our proposed primary evaporative emissions standards and onboard diagnostics requirements are also identical to the LEV III requirements.

We note there are a few proposed Tier 3 provisions that CARB and EPA understand would be different, for reasons discussed below. Specifically, these include the LEV III program and our proposed Tier 3 program would have different light-duty PM requirements late in the program (i.e., after MY 2024 (IV.A.3.b.)), would require different test fuels (E10 and E15, respectively (IV.A.3.c)), and only EPA would have an evaporative leak test (IV.C.5.b). EPA and CARB will continue to work toward additional consistency between our programs whenever practicable as both programs are implemented. Beyond these three provisions, the differences between the programs would not be major and would exist only in the early transitional years of the Tier 3 program. These differences would result from the fact that the LEV III requirements begin slightly earlier and that a limited phase-in of some provisions would be necessary for a smooth transition to overall aligned programs. These temporary differences would include the process for how early compliance credits would be generated and used (e.g., Section IV.A.7.a); how quickly manufacturers would need move toward certifying all of their vehicle models to longer useful-life values (e.g., Section IV.A.7.b) and on the new test fuel (e.g., Section IV.A.7.c); and transitional emissions bins to facilitate the transition from Tier 2 to Tier 3 (IV.A.7.m). Similarly, the primary Tier 3 evaporative standards would have a brief phase in period, temporarily resulting in requirements that would be slightly different from those in LEV III.

The proposed Tier 3 program is designed primarily to reduce exhaust and evaporative emissions during summer ambient temperature conditions when NMOG, NO_X and PM emissions contribute to air quality concerns. We are not proposing new emission requirements for any vehicle or fuel over the cold temperatures test cycles (i.e., the 20 °F cold CO and NMHC tests). However, we seek comment on the need for doing so, including vehicles operating on E85 fuel, and on the appropriate form and level for any such cold-temperature requirements.

[212] LEV III program as approved by the California Air Resources Board, January 2012.

2. Summary of Proposed FTP and SFTP Tailpipe Standards

We are proposing a comprehensive program that would address the key pollutants of concern. We are proposing new standards for the sum of NMOG and NO_X emissions, presented as NMOG+NO_X, and PM. As discussed in Section III above, these proposed standards would result in very significant improvements in vehicle emissions from the levels of the Tier 2 program. For these pollutants, we are proposing standards as measured on test procedures that represent a range of vehicle operation, including the Federal Test Procedure (FTP) and the Supplemental Federal Test Procedure (SFTP). Unless otherwise specified, the proposed FTP and SFTP standards would apply to vehicles operating on gasoline, diesel, and alternative fuels, including both flexible fuel and dedicated alternative fuel vehicles.

The proposed FTP and SFTP NMOG+NO_X standards would be fleet-average standards, meaning that the manufacturer would calculate the average emissions of the vehicles it sells in each model year and compare that average to the applicable standard for that model year. The proposed fleet average standards for NMOG+NO_X evaluated over the FTP are summarized in Table I–1. (For comparison, the average NMOG and NO_X standard for the Tier 2 program, when added together, equal 160 mg/mi). The standards would begin in MY 2017 at a level representing a 46 percent reduction from the current Tier 2 requirements for lighter vehicles and would become increasingly stringent, culminating in an 81 percent reduction in MY 2025. The proposed FTP NMOG+NO_X program includes separate fleet average standards for lighter and heavier vehicles that would converge at 30 milligrams per mile (mg/mi) in MY 2025 and later.[213] [214]

Manufacturers would determine their fleet average FTP NMOG+NO_X emission values based on the per-vehicle ''bin standards'' to which they certified each vehicle model. As with the Tier 2 program, manufacturers would be free to choose to certify vehicles to any of the bins, so long as the sales-weighted average of the NMOG+NO_X values from the selected bins met the fleet average standard for that model year. Table IV–1 presents the per-vehicle bin standards. Similarly, the proposed fleet average NMOG+NO_X standards measured over the SFTP are summarized in Table I–2. The proposed SFTP NMOG+NO_X fleet average standards decline from MY 2017 until MY 2025. In this case, the same standards would apply to both lighter and heavier vehicles. In MY 2025, the SFTP NMOG+NO_X standard would reach its fully phased-in fleet average level of 50 mg/mi. We are also proposing PM standards as part of this Tier 3 program. The proposed PM standards would apply to each vehicle separately (i.e., not as a fleet average). Also, in contrast to the declining NMOG+NO_X standards, the proposed certification PM standard on the FTP is 3 mg/mi for all vehicles and for all model years, but phasing in beginning in MY 2017 for vehicles at or below 6,000 lbs GVWR and in MY 2018 for vehicles above 6,000 lbs GVWR. Based on EPA and CARB test programs, most current light duty vehicles are already performing at or below this level. However, some vehicles are emitting above this level, due to such factors as combustion chamber designs, and fuel and oil consumption controls that are not optimized for low PM emissions. The intent of the proposed 3 mg/mi standard is to bring all light-duty vehicles to the PM level typical of that being demonstrated by most light-duty vehicles today.

To address the uncertainties that will accompany the introduction of new technologies, the proposed program also includes a separate in-use FTP PM standard of 6 mg/mi for the testing of in-use vehicles during the phase-in period, as described in more detail below. As presented in Table I–3, for vehicles at or below 6000 lbs GVWR, these FTP certification and in-use standards would be phased in beginning with a requirement that at least 20 percent of a company's U.S. sales meet the standards in MY 2017 and reaching a 100 percent compliance requirement in MY 2021. The proposed standards represent a significant numerical reduction from the Tier 2 PM emission standards of 10 mg/mi for light-duty vehicles. Finally, the proposed Tier 3 program includes PM standards evaluated over the US06 cycle (a component of the SFTP test, discussed further below) at a level of 10 mg/mi for vehicles at or below 6,000 lbs GVWR and 20 mg/mi for heavier vehicles. We are proposing separate standards for different sizes of vehicles because PM generation typically increases when vehicles are carrying heavier loads and/or when they are pulling trailers. The US06 PM standards would phase in on the same schedule as the FTP PM standards, reaching 100 percent of each company's U.S. sales by MY 2022. These US06 standards would apply to the same vehicle models that a manufacture chose to certify to the FTP PM standard during the percent phase in period. PM levels over the US06 are typically higher than the PM emitted over the FTP due to the increased load on the vehicle. As in the case of the FTP PM standards, the intent of the proposed standard is to bring the emission performance of all vehicles to that already being demonstrated by many vehicles in the current light-duty fleet.

As with the FTP PM standard, we propose a separate in-use US06 PM standard during the percent phase-in period of 15 and 25 mg/mi for vehicles of 6000 lbs GVWR and less, and for vehicles above 6,000 lbs GVWR, respectively.

The next subsections describe in more detail the proposed standards, how they would be implemented over time, and the technological approaches that we believe will be available to manufacturers in order to comply.

3. Proposed FTP Standards

As summarized above, we propose new standards for the primary pollutants of concern for this rule (NMOG, NO_X, and PM) as measured on the FTP. The following paragraphs describe in more detail these FTP standards for NMOG+NO_X and PM, as well as for carbon monoxide (CO) and formaldehyde (HCHO).

a. FTP NMOG+NO_X Standards

We propose that the Tier 3 NMOG and NO_X standards, both of which are important to reduce ambient ozone concentrations, be expressed in terms of the sum of the two pollutants, or as NMOG+NO_X in mg/mi.[215] This approach contrasts with the Tier 2 standards, which were expressed as separate NMOG and NO_X standards. We believe that the combined standard is appropriate for this proposed program for several reasons. At the stringent proposed emission levels, combining NMOG and NO_X would provide a small amount of compliance flexibility, while at the same time significantly reducing both NMOG and NO_X emission levels.

[213] The proposed declining NMOG+NO_X fleet-average standards would consist of one set of declining standards that would apply to light-duty vehicles (LDVs) and small light trucks (LDT1s) and a second set of declining standards that would apply to heavier light trucks (LDT2s, LDT3s. LDT4s), and MDPVs.

[214] This preamble presents the proposed standards in terms of milligrams per mile for convenience. The associated regulatory language will continue to present the standard in terms of grams per mile for consistency with earlier programs.

[215] In the past, EPA has taken a similar combined-standard approach for heavy-duty highway engines and many categories of nonroad engines.

For example, the combined standard would allow a gasoline vehicle manufacturer to have slightly higher NMOG if it were offset by lower NO_X, or allow a diesel vehicle manufacturer to have slightly higher NO_X if offset by lower NMOG. This approach still ensures major reductions in both pollutants compared to today's levels. This is because the very stringent level of the fully phased-in proposed combined standard (30 mg/mi NMOG+NO_X) means that even with a degree of allowed trading off of one pollutant for the other, the maximum emissions of either pollutant would need to be well below current levels. The standards of the California LEV III program would also be expressed as NMOG+NO_X; aligning Tier 3 with LEV III in this respect would facilitate an important element of a national program.

We believe that a fully phased-in level for the proposed fleet-average standard of 30 mg/mi is the most stringent level that we could reasonably propose in the context of our proposed 10-ppm average standard for gasoline sulfur. As discussed in the feasibility Section IV.A.5 below, when necessary margins of compliance are considered, this proposed standard is very close to zero. We request comment on this level for the proposed standard, as well as the declining standards during the transition years (see Table IV–3 below). EPA is proposing compliance mechanisms for the new Tier 3 FTP standards that are the same in most respects as those of the Tier 2 program. Using the Tier 2 approaches as much as possible would streamline the implementation of the program by maintaining most of the compliance processes that manufacturers are familiar with today.

A key compliance mechanism adapted from the Tier 2 program is a ''bin'' structure for the proposed emission standards. For these purposes, a bin is a set of several standards that are intended to be complied with as a group. Thus each Tier 3 bin would have an NMOG+NO_X standard and a PM standard, as well as CO and HCHO standards. A manufacturer choosing to certify a vehicle to a certain bin would need to meet each of that bin's standards for the full useful life of the vehicle. In this approach, manufacturers could certify vehicles to any of the bins, but they would have to ensure that average NMOG+NO_X of the bins to which all of its vehicles were certified met the fleet average standard specific to the vehicle category (i.e., LDV/LDT1 and LDT2/3/4/MDPVs) for that model year. That is, a manufacturer would comply by ensuring that the sales-weighted average of the NMOG+NO_X values of the bins to which each of its vehicle models was certified was lower than the fleet average standard that applied for that model year.

For each proposed bin, we are including CO and HCHO standards at levels intended to prevent new engine and emission control designs that would result in increases in today's CO and HCHO emissions. The standards are based on the comparable current LEV II and Tier 2 bin standards for these pollutants. The current standards do not appear to be technology-forcing, and we believe that this would continue to be the case as Tier 3 technologies are developed.

The bin structure that we are proposing for light duty vehicles, light-duty trucks, and MDPVs standards is presented in Table IV–1.

TABLE IV–1—PROPOSED FTP STANDARDS FOR LDVS, LDTS AND MDPVS (MG/MI)

Bin	NMOG+NO_X (mg/mi)	PM [a] (mg/mi)	CO (g/mi)	HCHO (mg/mi)
Bin 160	160	3	4.2	4
Bin 125	125	3	2.1	4
Bin 70	70	3	1.7	4
Bin 50	50	3	1.7	4
Bin 30	30	3	1.0	4
Bin 20	20	3	1.0	4
Bin 0	0	0	0	0

[a] In MYs 2017–20, the PM standard applies only to that segment of a manufacturer's vehicles covered by the percent of sales phase-in for that model year.

Consistent with the Tier 2 principle of vehicle and fuel neutrality, we are proposing that the same standards apply to LDVs, LDTs, or MDPVs, regardless of the fuel they use. That is, vehicles certified to operate on any fuel (e.g., gasoline, diesel fuel, E85, CNG, LNG, hydrogen, and methanol) would all be subject to the same standards.

We propose to maintain the fleet-average approach of the Tier 2 standards. Unlike Tier 2, the proposed Tier 3 fleet-average standards would decline annually to a fully phased-in level of 30 mg/mi NMOG+NO_X. (The Tier 2 program, after a period of transition, established a single fleet average standard for all model years.) Specifically, we are proposing NMOG+NO_X standards as measured on the FTP that would reduce the combined fleet-average emissions gradually from MY 2017 through 2025, as shown in Table IV–2 below. Beginning in MY 2017, we propose separate fleet average standards for lighter and heavier vehicles that would both decline annually, converging in MY 2025. These proposed declining average standards are identical to CARB's LEV III standards.[216]

The declining fleet-average NMOG+NO_X standard requirement would begin in 2017 for light-duty vehicles and light-duty trucks with a GVWR up to and including 6,000 lbs and in 2018 for all other light-duty vehicles and light-duty trucks (i.e., those with a GVWR greater than 6,000 lbs). The standards would apply to the heavier vehicles a year later to facilitate the transition to a 50-state program for all manufacturers. During this transition period, there would be two fleet-average NMOG+NO_X standards for each model year, one for LDVs and LDT1s and a second fleet-average standard for all other LDTs (LDT2s, LDT3s, and LDT4s) and for MDPVs. We are proposing that the fleet-average standards decline in a linear way from MY 2017 through MY 2025, at which point the two fleet-average standards would converge and stabilize for later model years at the same level, 30 mg/mi, as shown in Table IV–2. Note that these fleet average standards are for LDT2 and larger vehicles, and for LDVs and LDT1s that

[216] See California Low-Emission Vehicles (LEV) & GHG 2012 regulations adopted by State of California Air Resources Board, March 22, 2012, Resolution 12–21 incorporating by reference Resolution 12–11, which was adopted January 26, 2012. Available at *http://www.arb.ca.gov/regact/2012/leviiighg2012/leviiighg2012.htm* (last accessed November 19, 2012).

manufacturers certify to the 150,000 mile useful life value. Section IV.A.7.b discusses how the Clean Air Act defines the useful life values for certification purposes and how EPA proposes to also provide for certification to slightly lower emissions standards to a useful life value of 120,000 miles, representing a level of stringency that is equivalent to that of the emission standards corresponding to the 150,000 mile useful life, for LDVs and LDT1s.

TABLE IV–2—PROPOSED LDV, LDT, AND MDPV FLEET AVERAGE FTP NMOG+NO_X STANDARDS

[mg/mi]

	Model Year								
	2017[a]	2018	2019	2020	2021	2022	2023	2024	2025 and later
LDV/LDT1[b]	86	79	72	65	58	51	44	37	30
LDT2,3,4 and MDPV	101	92	83	74	65	56	47	38	30

[a] For vehicles above 6,000 lbs GVWR, the fleet average standards would apply beginning in MY 2018.

[b] These proposed standards apply for a 150,000 mile useful life. Manufacturers could choose to certify all of their LDVs and LDV1s to a useful life of 120,000 miles. If any of these families are certified to the shorter useful life, a proportionally lower numerical fleet average standard would apply, calculated by multiplying the respective 150,000 mile standard by 0.85 and rounding to the nearest mg.

EPA is also proposing an alternative phase-in of the 30 mg/mi FTP NMOG+NO_X standard that would be available if a manufacturer prefers a stable standard and four full years of lead time, as specified in the Clean Air Act for vehicles above 6,000 lbs GVWR. For MYs 2017 and 2018, a manufacturer would certify vehicles up to 6,000 lbs GVWR to the primary declining FTP fleet average standards, as in the primary program. Then, beginning in MY 2019, a stable fleet average standard of 30 mg/mi would apply to an increasing percentage of a manufacturer's light-duty vehicles, light-duty trucks, and MDPVs, both up to and above 6,000 lbs GVWR. The percent phase-in would match the proposed PM percent phase-in schedule, as discussed below—specifically 40 percent of sales in MY 2019, 70 percent in MY 2020, and 100 percent in MY 2021 and later model years. A manufacturer choosing to certify any vehicle to this alternative phase-in would need to use this approach for all its models in MYs 2019 and later; certifying part of its fleet to the declining fleet average after MY 2018 would not be permitted, since the structures of the two approaches, including the early credits provisions of the NMOG+NOx fleet average program, would not be consistent. A manufacturer certifying to this alternative phase-in would also need to comply with the alternative SFTP NMOG+NOx phase-in and the alternative FTP PM and US06 PM phase-ins as described below. Vehicles covered by the alternative phase-in programs would be considered ''final Tier 3'' vehicles and thus would also comply with the Tier 3 certification fuel and full useful life provisions. EPA requests comment on this alternative phase-in approach as well as on the primary option above.

b. FTP PM Standards

We also propose new FTP standards for PM emissions, as summarized in Table IV–3 below. For many years, EPA's focus for mobile source PM was on diesel engine emissions. In recent years, the very effective controls on PM exhaust emissions that manufacturers have developed for heavy-duty diesel engines have been successfully applied to light-duty diesel engines as well. At the same time, attention to gasoline engine PM emissions has increased as research has demonstrated that the level of PM from gasoline light duty vehicles is more significant than had been previously thought.[217]

Under typical driving, as simulated by the FTP, the PM emissions of most current-technology gasoline vehicles are fairly low, well below the Tier 2 PM standards. At the same time we see considerable variation in PM emissions among vehicle models not consistently associated with any specific engine or emission control technology (Section 1.5.1 of the draft RIA). As a result, we are proposing a new FTP PM standard that is set to ensure that all new vehicles would perform at a level representing what is already being achieved by well-designed Tier 2 emission control technologies.

PM emissions over the FTP are generally attributed to the cold start, when PM formation from combustion of the fuel is facilitated by the operating conditions, including a cold combustion chamber and fuel enrichment. During cold start, PM control via oxidation of semi-volatile organic compounds from the lubricating oil by catalytic converters is less effective. We believe that the proposed FTP PM standard can be achieved with improvements to the fuel controls during the cold start without the need for any new technology or hardware. Improvements in cold-start exhaust catalyst performance for NMOG+NOx control will also reduce emissions of semi-volatile organic PM. As such, cold start PM levels are relatively independent of vehicle application and therefore we are proposing a single FTP PM standard for all light-duty and MDPV vehicles. The PM standard level we are proposing would ensure that future PM performance is consistent with current well-performing Tier 2 vehicles. Unlike the NMOG+NO_X FTP standard, the PM standard would not decline over time, since most manufacturers are already producing vehicles that would meet the proposed new standards.

Although we believe it is important that the proposed FTP PM standard apply from the beginning of the Tier 3 program, we are proposing several provisions to provide a degree of flexibility for manufacturers in how many vehicle models would need to meet that standard in the early years of the program. Manufacturers have raised several issues that we believe these provisions would address.

In meetings with EPA, several manufacturers have expressed concerns about how a PM standard in the range of the proposed 3 mg/mi standard would be implemented. One concern related to the initial uncertainties about PM emissions performance that will accompany the development of new engine technologies, including those that may be introduced to address the GHG emissions/fuel economy standards that EPA and NHTSA recently finalized for these vehicles. Also, manufacturers expressed concerns related to the testing

[217] Nam, E.; Fulper, C.; Warila, J.; Somers, J.; Michaels, H.; Bauldauf, R.; Rykowski, R.; and Scarboro, C. Analysis of Particulate Matter Emissions from Light-Duty Gasoline Vehicles in Kansas City, EPA420–R–08–010. Assessment and Standards Division Office of Transportation and Air Quality U.S. Environmental Protection Agency Ann Arbor, MI, April 2008.

of PM on the FTP, particularly about potential updates to the test procedures required to accurately measure PM at very low levels. Finally, related to the concerns about the new test procedures are the current limitations that exist for some manufacturers regarding the capacity of their test facilities to perform a significant volume of gasoline vehicle PM testing.

For these reasons, we are proposing a percent-of-sales phase-in during the first 5 years of the program to address these concerns. Beginning in MY 2017 (and in MY 2018 for vehicles over 6,000 lbs GVWR), manufacturers would comply with the PM standard with a minimum of 20 percent of their U.S. sales. As shown in Table IV–3, the percentage of the manufacturer's sales that would need to comply would increase each year, reaching 100 percent in MY 2021. In addition to this percent phase-in, we are proposing a separate PM standard of 6 mg/mi that would apply only for in-use testing of vehicles certified to the new standards, and only during the percent phase-in period.

Due to the MY 2018 start date for vehicles over 6,000 lbs GVWR, manufacturers that have few or no vehicle models over 6,000 lbs GVWR would be required to certify a larger percentage of their total light-duty sales in MY 2017 than full line manufacturers. While we believe that most manufacturers would likely choose a single large-volume durability group to meet the 2017 requirements, we seek comment on an option to comply with the MY 2017 PM requirements by allowing manufactures to certify 10 percent of all their light-duty vehicle sales in MY 2017 to the new PM standards, including light-duty vehicles over 6,000 lbs GVWR and MDPVs. This approach would be consistent with the CARB LEVIII program, which requires that 10 percent of all light-duty vehicle sales meet the new PM standards in MY 2017.

Because of the expected time and expense of performing emission tests on the improved PM test procedures, we are proposing to limit the number of tests using the new procedures that a manufacturer would need to perform at certification and during in-use testing. Specifically, manufacturers would be required to test vehicles representing a minimum of 25 percent of a model's durability test groups during certification each model year (and a minimum of 2 durability groups).[218] Manufacturers could select which durability groups to test, but would need to rotate the groups tested each year to eventually cover their whole fleet. Similarly, manufacturers performing in-use testing under the In-Use Verification Program could limit their testing to 50 percent of their low- and high-mileage test vehicles. Again, manufacturers would need to rotate their vehicle models so that each model would be tested every other year. Overall, we believe that the flexibility that these proposed provisions would provide would facilitate the expeditious implementation of the proposed program, with no significant impact on the potential benefits of the program.

The PM standards that we are proposing are the most stringent technically feasible standards within the implementation timeframe of this proposal. Although the CARB LEV III program includes a 1 mg/mi standard which will begin phasing in starting in MY 2025, they acknowledge that there is a need for continuing PM measurement method development prior to implementing this standard.[219] In order for EPA to propose a standard at this level, there must be established methods to reliably and consistently measure PM below that standard, for compliance purposes.

We request comment on all of the proposed FTP standards, their structure, and their implementation schedules.

TABLE IV–3—SUMMARY OF PROPOSED FTP STANDARDS

Program Element		Units	Model Year							Notes
			[a] 2017	2018	2019	2020	2021	2022	2023	
NMOG+NO_X Standard (fleet average)		mg/mi	Per declining fleet average for cars and trucks (see Table IV-2) [b]							
PM Standards										
Phase-in		%	*20*	*20*	*40*	*70*	*100*	*100*	*100*	
FTP	Certification	mg/mi	3	3	3	3	3	3	3	Note c
	In-use	mg/mi	6	6	6	6	6	3	3	Note d

[a] For vehicles above 6,000 lbs GVWR, the proposed FTP PM would apply beginning in MY 2018.
[b] The percent phase-in would not apply to the declining fleet average standards.
[c] Manufacturers would be required to test 25 percent of each model year's durability groups, minimum of 2.
[d] Manufacturers would be required to test 50 percent of their low and high mileage in-use vehicles.

As with the proposed FTP NMOG+NO_X standards, EPA is also proposing an alternative phase-in of the 3 mg/mi FTP PM standard that would be available if a manufacturer prefers 4 full years of lead time for vehicles above 6,000 lbs GVWR. A manufacturer that chooses the alternative phase-in for the FTP NMOG+NO_X program above could also postpone the beginning of the phase-in for PM compliance for vehicles above 6,000 lbs GVWR until MY 2019. For MYs 2017 and 2018, a manufacturer would certify vehicles up to 6,000 lbs GVWR to the 3 mg/mi FTP PM standard (and have a 6 mg/mi in-use PM standard) for 20 percent of its sales in each of those years, as with the primary PM percent phase-in schedule. Then, for MYs 2019 and later, it would comply with the 3 mg/mi (and 6 mg/mi in-use) PM standards for their LDVs, LDTs, and MDPVs, both up to and above 6,000 lbs GVWR. For MYs 2019 and 2020 (i.e., before the phase-in is fully implemented in MY 2021), manufacturers choosing this alternative would be required to meet the PM standard on the same segment of their fleet vehicles being used to meet the NMOG+ NO_X fleet average standard, and at the applicable phase-in percentage of sales for the given model year. Manufacturers

[218] Durability groups are a subset of engine families. Several engine families may have the same durability group.

[219] California Air Resources Board (CARB) Initial Statement of Reasons, Public Hearing to Consider LEV III, December 7, 2011

certifying to the alternative PM phase-in standard would also need to comply with the alternative US06 PM phase-in as described below, as well as the NMOG+ NO_X FTP and SFTP phase-ins. EPA requests comment on this alternative phase-in approach as well as on the primary PM phase-in option above.

4. Proposed SFTP Standards

In addition to the proposed FTP standards, we are proposing NMOG+NO_X and PM standards as measured on the SFTP. The SFTP (and specifically the US06 component of the test) is designed to simulate higher speeds and higher acceleration rates (and thus higher loads) when substantially more heat can be generated during the combustion process. It is during these kinds of operation that engines can go into a fuel ''enrichment'' mode, where the engine's controls may temporarily create a rich air/fuel mixture to protect exhaust components from thermal damage. Enrichment can increase emissions of NMOG+NO_X and PM, primarily due to the incomplete combustion that occurs under rich conditions and the diminished effectiveness of the catalyst in these circumstances. However, enrichment can be minimized or eliminated in current and future engines, where components can be thermally protected even under high-load conditions by careful electronic management of the air/fuel mixture and the combustion process. To reduce emissions caused by excessive enrichment, we are proposing new SFTP standards. Further, as described in Section IV.A.4.c below, we are proposing limitations on the magnitude of enrichment that could be commanded by the vehicle operator. We describe the proposed SFTP standards in the following paragraphs.

We are also proposing an SFTP composite CO standard of 4.2 g/mi for all model years 2017 (or 2018) and later. This standard represents no effective change from the current Tier 2 SFTP CO standard, which we believe is already at a level that is sufficiently stringent.

a. SFTP NMOG+NO_X Standards

We have reviewed certification and in-use NMOG and NO_X data on a wide range of recent vehicles as tested on the US06 cycle. See Chapter 1 of the draft RIA for an analysis of this data. It is clear that most current vehicles are generally avoiding significant enrichment events during high-load operation and thus achieve relatively low NMOG+NO_X emissions on the US06 test. The data shows that with minor (if any) improvements to engine calibrations and with no significant loss of performance, manufacturers are able to essentially eliminate enrichment events and their emissions consequences. Thus, as presented in Table IV–5 below, we are proposing new composite SFTP standards for NMOG+NO_X at levels that would be more stringent than those required by the existing Tier 2 program. We believe that the new standards would require emission performance at levels currently achieved today by most vehicles under high-load operation, and we do not believe that significant additional reductions would result from SFTP standards more stringent than the proposed 50 mg/mi fully phased-in level. The SFTP emissions value for certification of gaseous pollutants would continue to be calculated as a weighted composite value of emissions on three cycles ($0.35 \times FTP + 0.28 \times US06 + 0.37 \times SC03$), as is done for the Tier 2 SFTP standards.

We believe that the proposed standards could be more challenging in the early years of the program. Thus, we propose a declining fleet average standard that would become increasingly stringent from MY 2017 to MY 2025. Manufacturers would comply with a declining NMOG+NO_X fleet-average SFTP standard for each year beginning in MY 2017 (MY 2018 for vehicles over 6000 lbs GVWR) and culminating for MY 2025 and later with a fleet-average standard of 50 mg/mi.

To provide flexibility in meeting the fleet-average standards, manufacturers would determine for themselves what the specific SFTP composite standard would be for an individual vehicle family and report that self-selected standard and the measured emission performance. (These self-selected standards are analogous to ''family emission limits,'' or ''FELs,'' used in other programs (e.g., heavy-duty highway engine standards).) For each family, a manufacturer would choose any composite NMOG+NO_X standard, up to 180 mg/mi, in even 10 mg/mi increments. The manufacturer would then calculate the sales-weighted average of all the selected standards of the families across its fleet and compare that emissions value to the applicable fleet-average standards for that model year. Table IV–4 presents the proposed declining fleet-average SFTP NMOG+NO_X standards.

As with the proposed FTP NMOG+NO_X and PM standards, EPA is also proposing an alternative phase-in of the 50 mg/mi SFTP NMOG+NO_X standard that would be available if a manufacturer prefers a stable standard and four full years of lead time for vehicles above 6,000 lbs GVWR. For MYs 2017 and 2018, a manufacturer would certify vehicles up to 6,000 lbs GVWR to the primary SFTP declining fleet average standards, as in the primary program. Then, beginning in MY 2019, a stable fleet average standard of 50 mg/mi would apply to an increasing percentage of a manufacturer's light-duty vehicles, light-duty trucks, and MDPVs, both up to and above 6,000 lbs GVWR. The percent phase-in would match the proposed PM percent phase-in schedule, as discussed below. A manufacturer certifying to this alternative phase-in would also need to comply with the alternative FTP NMOG+NO_X phase-in and the alternative FTP PM and US06 PM phase-ins, as described elsewhere in this section. EPA requests comment on this alternative phase-in approach as well as on the primary option above.

b. US06 PM Standards

Our proposed approach to addressing PM emissions on the US06 test (a component of the composite SFTP standard) is somewhat different from the SFTP standards that we are proposing for NMOG and NO_X emissions. In the case of PM, US06 data on recent vehicles shows that current gasoline vehicles can have very low PM emissions, but US06 PM emission levels vary depending on many factors. In some cases, manufacturer emission control strategies that are sensitive to variations in operating conditions (e.g., variation due to driver behavior or automatic transmission shift points) appear to result in very low PM levels during some tests and yet higher PM on other tests on the same vehicle when driven slightly differently. We also believe that some of the observed high PM emissions may be partly due to increasing oil consumption in vehicles as they age, especially under higher-load conditions or hard closed-throttle deceleration conditions. Thus, we now believe that more focus on vehicles as they age is important.

We have designed the proposed US06 PM standards in light of all of these factors, which relate to PM emission formation under relatively extreme driving conditions. For these standards, we are proposing to focus on the US06 cycle component of the composite SFTP, since most of our concern about PM formation and sensitivity of engine controls arises from high-speed, high-load driving conditions. Similarly, the quantity of PM emissions from warmed-up engines is closely related to engine load, since the higher rate of fuel consumption results in more

opportunities for PM to form. For this reason, we propose that heavier vehicles, which face high-load conditions more frequently than lighter vehicles, comply with a higher US06 standard and lighter vehicles comply with a lower standard. The proposed US06 PM standard would be 10 mg/mi for vehicles at or below 6,000 lbs GVWR and 20 mg/mi for heavier vehicles.

EPA is seeking comment on the use of vehicle weight to establish separate US06 PM standards for cars and trucks. The data presented in Chapter 1 of the draft RIA demonstrate that today's heavier vehicles are already achieving PM emission levels well below our proposed 20 mg/mi standard and are approximately equivalent to the performance of lighter vehicles. According to our data, manufacturers appear to be controlling PM emissions in heavier vehicles over severe duty cycles. Thus, EPA seeks comment on the proposed US06 PM standards in general, including whether EPA should adopt a common US06 standard of 10 mg/mi for all light-duty vehicles.

As is the case for the proposed FTP PM standards, we are proposing a single per-vehicle maximum standard to apply in each model year, with an allowable percentage phase-in schedule identical to the FTP PM phase-in.

Finally, as with the FTP PM standard (and for the same reasons), we propose a slightly less stringent in-use US06 PM standard that would apply during the percent phase-in period only. The proposed in-use SFTP PM standards would be 15 mg/mi for vehicles at or below 6,000 lbs GVWR and 25 mg/mi for heavier vehicles.

As with the proposed FTP and SFTP NMOG+NO_X standards and FTP PM standards, EPA is also proposing an alternative phase-in of the 20 mg/mi PM standard as measured on the US06 cycle, that would be available if a manufacturer prefers 4 full years of lead time for vehicles above 6,000 lbs GVWR. A manufacturer that chooses the alternative phase-in for the FTP NMOG+NO_X program above could also postpone the beginning of the phase-in for US06 PM compliance for vehicles above 6,000 lbs GVWR until MY 2019. For MYs 2017 and 2018, a manufacturer would certify vehicles up to 6,000 lbs GVWR to the 10 mg/mi FTP PM standard (and have a 15 mg/mi in-use standard) for 20 percent of its sales in each of those years, as with the primary PM percent phase-in schedule. Then, for MYs 2019 and later, it would comply with the respective standards for vehicles up to and above 6,000 lbs GVWR for their LDVs, LDTs, and MDPVs (i.e., 10 mg/mi and 15 mg/mi (in-use) for vehicles up to 6,000 lbs GVWR, and 20 mg/mi and 25 mg/mi (in-use) for vehicles above 6,000 lbs GVWR.) For MYs 2019 and 2020, manufacturers choosing this alternative would be required to meet both the FTP PM and the US06 PM standards on the same segment of their fleet vehicles being used to meet the 30 mg/mi fleet average NMOG+NO_X standards, at the applicable percent phase-in requirement for the given model year. Manufacturers certifying to the alternative US06 PM phase-in standard would also need to comply with the alternative FTP PM phase-in as described above, as well as the NMOG+NO_X FTP and SFTP phase-ins. EPA requests comment on this alternative phase-in approach as well as on the primary US06 phase-in option above.

All of the proposed SFTP/US06 standards are shown in Table IV–4 and Table IV–5.

TABLE IV–4—PROPOSED LD AND MDPV SFTP COMPOSITE FLEET AVERAGE STANDARDS

	Model year								
	2017	2018	2019	2020	2021	2022	2023	2024	2025 and later
NMOG+NO_X (mg/mi)	[a] 103	97	90	83	77	70	63	57	50
CO (g/mi)	[a] 4.2								

[a] For vehicles above 6,000 lbs GVWR, the NMOG+NO_X and CO standards would apply beginning in MY 2018.

TABLE IV–5—SUMMARY OF PROPOSED SFTP STANDARDS

Program element	Units	Model year							Notes
		[a] 2017	2018	2019	2020	2021	2022	2023	
NMOG+NO_X Standard (fleet average)	mg/mi	Per declining fleet average for cars and trucks (see Table IV-4) [b]							
PM Standards:									
Phase-in	%	20	20	40	70	100	100	100	
US06:									
LDV, LDT1&2 Certification	mg/mi	10	10	10	10	10	10	10	Note c.
LDV, LDT1&2 In-use	mg/mi	15	15	15	15	15	10	10	Note d.
US06:									
LDT3&4, MDPV Certification	mg/mi	20	20	20	20	20	20	20	Note c.
LDT3&4, MDPV In-use	mg/mi	25	25	25	25	25	20	20	Note d.

[a] For vehicles above 6,000 lbs GVWR, the standards would apply beginning in MY 2018.
[b] The percent phase-in would not apply to the declining fleet average standards.
[c] Manufacturers would be required to test 25 percent of each model year's durability groups, minimum of 2.
[d] Manufacturers would be required to test 50 percent of their low and high mileage in-use vehicles.

We request comment on our proposed SFTP NMOG+NO_X and PM standards, their structure, and their implementation schedules.

c. Enrichment Limitation for Spark-Ignition Engines

To prevent emissions from excessive enrichment during operating conditions represented by the SFTP cycles, we are proposing limitations on the magnitude of enrichment that could be commanded, including enrichment episodes encountered during in-use

operation. During conditions where enrichment was demonstrated to be present on the SFTP, the nominal air to fuel ratio could not be richer at any time than the leanest air to fuel ratio required to obtain maximum torque (lean best torque or LBT). An air to fuel ratio of LBT plus a tolerance of 4 percent additional enrichment would be allowed in actual vehicle testing to protect for any in-use variance in the air to fuel ratio from the nominal LBT air to fuel determination, for such reasons as air or fuel distribution differences from production variances or aging.

LBT is defined as the leanest air to fuel ratio required at a speed and load point with a fixed spark advance to make peak torque. Specifically, an increase in fuel would not result in an increase in torque while maintaining a fixed spark advance. LBT is determined by setting the spark advance to a setting that is less than or equal to the spark advance required for best torque (MBT) and maintaining that spark advance when sweeping the air to fuel ratio. This fixed spark advance requirement is intended to prevent torque changes related to spark changes masking true LBT. Manufacturers may request approval of an alternative LBT definition for a unique technology or control strategy. The Agency could determine that an enrichment amount was excessive or not necessary and therefore deem that the approach did not meet the air to fuel ratio requirements.

Enrichment required for thermal protection would continue to be allowed upon demonstration of necessity to the Agency, based upon temperature limitations of the engine or exhaust components. Manufacturers would be required to provide descriptions of all components requiring thermal protection, temperature limitations of the components, how the enrichment strategy will detect over-temperature conditions and correct them, and a justification regarding why the enrichment is the minimum necessary to protect the specific components. The Agency may determine that the enrichment is not justified or is not the minimum necessary based on the use of engineering judgment using industry-reported thermal protection requirements.

5. Feasibility of the Proposed NMOG+NO_X and PM Standards

In this section, with additional support in Chapter 1 of the draft RIA, we describe how we reached our conclusion that the proposed Tier 3 standards would be technologically feasible in the time frame of the program. For each of the proposed emission standards, the lead time provided by the proposed program is more than sufficient for all manufacturers to comply. First, manufacturers in many cases are already adopting complying technologies for reasons other than this proposed rulemaking. For example, many of the technologies that manufacturers will begin to develop as early as MY 2014 in response to the CARB LEV III FTP and SFTP NMOG+NO_X standards for the California market will likely represent steps toward compliance with this proposed national program. Similarly, manufacturers are already building some vehicles that comply with our proposed evaporative emissions standards in response to the CARB LEV III evaporative standards. In addition, as described above, our proposed program incorporates a number of phase-in provisions that would ease the transition to compliance, including time some manufacturers would need to install PM testing capability and to ramp up production on a national scale. We invite comment on our conclusions relating to the feasibility of the proposed program for each of the standards, as discussed below, including our overall conclusion that technological lead time is not a driving factor in complying with any of the proposed standards.

This feasibility assessment is based on a variety of complementary technical data, studies, and analyses. As described below, these include our analysis of the stringency of the proposed standards as compared to current Tier 2 emission levels. We also discuss below our observation that manufacturers are currently certifying several vehicle models under the California LEV II program that could likely achieve the proposed Tier 3 NMOG+NO_X and PM standards or similar levels. EPA has assessed the emissions control challenges manufacturers would generally face (e.g., cold start NMOG reductions and running (warmed-up) NO_X emissions under typical and more aggressive driving conditions) and the corresponding technologies that we expect to be available to manufacturers to meet these challenges. Our feasibility assessment accounts for the fact that the proposed Tier 3 program would apply to all types of new vehicles, ranging from small cars to large pick-up trucks and MDPVs and representing a wide diversity in applications and in specific engine designs.

It is important to note that our primary assessment of the feasibility of engine and emission control technologies is based on the assumption that vehicles would be certified on gasoline with a fuel sulfur content of 10 ppm and operated on in-use gasoline with 10 ppm sulfur or less.[220] Therefore, our primary assessment does not incorporate the degradation of emission control system caused by higher levels of sulfur content, as is discussed in Section IV.6 below and in the draft RIA. This assessment reinforces the critical role of gasoline sulfur control, as proposed in Section V below, in making it possible for EPA to propose emission standards at these very stringent levels. See Section IV.6 below for a full discussion of our current knowledge of the effects of gasoline sulfur on current vehicle emissions as well as our projections of how we expect that sulfur would affect compliance with standards in the range of the proposed Tier 3 standards.

Since there are multiple aspects to the Tier 3 program, it is necessary to consider technical feasibility in light of the different program requirements and their interactions with each other. In many cases, manufacturers would be able to address more than one requirement with the same general technological approach (e.g., faster catalyst light-off can improve both FTP NMOG+NO_X and PM emissions). At the same time, the feasibility assessment must consider that different technologies may be needed on different types of vehicle applications (i.e., cars versus trucks) and must consider the relative effectiveness of these technologies in reducing emissions for the full useful life of the vehicle while operating on expected in-use fuel. For example, certain smaller vehicles with correspondingly small engines may be less challenged to meet FTP standards than larger vehicles with larger engines. Conversely, these smaller vehicles may have more difficulty meeting the more aggressive SFTP requirements than vehicles with larger and more powerful engines. Additionally, the ability to meet the proposed SFTP emission requirements can also be impacted by the path taken to meet the FTP requirements (e.g., larger volume catalysts for US06 emissions control vs. smaller catalysts for improved FTP cold-start emissions control). Throughout the following discussion, we address how these factors, individually and in interaction with each other, affect the feasibility of the proposed program. We

[220] Our technology, feasibility, and cost assessments are also consistent with an assumption that certification fuel would contain 15 percent ethanol and would have other properties as specified in Section IV.D below.

invite comment on our assessments of these or any other such potential interactions. Also, although we are not aware of any technological reasons that vehicle emission controls responding to new Tier 3 requirements should affect vehicle CO_2 emissions or fuel economy in any significant way, it is possible that such interactions could occur. For example, there may be some slight change in vehicle mass if manufacturers explore lighter exhaust manifold materials in order to reduce thermal mass and promote earlier catalyst light-off or add emissions control equipment such as hydrocarbon adsorbers. We invite comment on any such potential effects as well.

a. FTP NMOG+NO_X Standards

The proposed new emission requirements include stringent NMOG+NO_X standards on the FTP that would require new vehicle hardware in order to achieve the 30 mg/mi fleet average level in 2025. The type of new hardware that would be required would vary depending on the specific application and emission challenges. Smaller vehicles with corresponding smaller engines would generally need less new hardware while larger vehicles may need additional hardware and improvements beyond what would be needed for the smaller vehicles. While some vehicles, especially larger light trucks, may face higher costs in meeting the proposed standards, it is important to remember that not every vehicle needs to meet the standard. The proposed program has been structured to provide higher emission standard ''bins'' (see Table IV–1 above) to which manufacturers may certify more challenged vehicles, so long as these vehicles are offset with vehicles certified in lower emission bins such that the fleet-wide average meets the standard. We believe that the availability of the proposed less-stringent bins would allow for feasible and cost-effective compliance for all vehicles. In the Tier 2 program, manufacturers took advantage of this flexibility, especially in the early years of the program. Then, as technologies improved and/or became less expensive and the need for averaging diminished, manufacturers began certifying all or most of their fleets to the average bin (Tier 2 Bin 5). We anticipate that manufacturers will follow a similar trend with the proposed Tier 3 standards, relying on fleet averaging more significantly in the transitional years but certifying increasing numbers of their vehicles to the final fleet average standard of 30 mg/mi in the later years of the program.

In order to assess the technical feasibility of a 30 mg/mi NMOG+NO_X national fleet average FTP standard, EPA conducted two supporting analyses. The initial analyses performed were of the current Tier 2 and LEV II fleets. This provided a baseline for the current federal fleet emissions performance, as well as the emissions performance of the California LEV II fleet. The second consideration was a modal analysis of typical vehicle emissions under certain operating conditions. In this way EPA determined the specific emissions performance challenges that vehicle manufacturers would face in meeting the lower fleet average emission standards. Each of these considerations is described in greater detail below.

The current federal fleet is certified to an average of Tier 2 Bin 5, equivalent to 160 mg/mi NMOG+NO_X.[221] For MY 2009, 92 percent of LDVs and LDT1s were certified to Tier 2 Bin 5 and 91 percent of LDT2s through LDT4s were certified to Tier 2 Bin 5. This was not an unexpected result as there is currently no motivation for vehicle manufacturers to produce a federal fleet that over-complies with respect to the current Tier 2 standards. By comparison, in the California fleet, where compliance with the ''PZEV'' program encourages manufacturers to certify vehicles to cleaner levels, only 30 percent of the LDVs and LDT1s are certified to Tier 2 Bin 5 and 60 percent are certified to Tier 2 Bin 3. The situation regarding the truck fleet in California is similarly stratified, with 37 percent of the LDT2s through LDT4s being certified to Tier 2 Bin 5 and 55 percent being certified to Tier 2 Bin 3. In many cases identical vehicles are being certified to a lower standard in California and a higher standard federally. We note that vehicles certified to a lower standard in California are operated on gasoline with an average sulfur content of 10 ppm and thereby are able to maintain their emissions performance in-use. Based on these patterns of federal and California certification, EPA believes that much of the existing Tier 2 fleet could be certified to a lower federal fleet average immediately, with no significant feasibility concerns, if lower sulfur gasoline were made available nationwide.

Regardless of the Tier 2 bin standards at which manufacturers choose to certify their vehicles, actual measured emissions performance of these vehicles is typically well below the numerical standards. This difference is referred to as ''compliance margin'' and is a result of manufacturers' efforts to address all the sources of variability, including:

- Test-to-test variability (within one test site and lab-to-lab)
- Build variation expectations
- Manufacturing tolerances and stack-up
- Vehicle operation (for example: driving habits, ambient temperature, etc.)
- Fuel composition
- The effects of fuel sulfur on exhaust catalysts and oxygen sensors
- The effects of other fuel components, including ethanol and gasoline additives
- Oil consumption
- The impact of oil additives and oil ash on exhaust catalysts and oxygen sensors

For MY 2009, the compliance margin for a Tier 2 Bin 5 vehicle averaged approximately 60 percent. In other words, actual vehicle emissions performance was on average about 40 percent of a 160 mg/mi NMOG+NO_X standard, or about 64 mg/mi. By comparison, for California-certified vehicles, the average Super Ultra Low Emission Vehicle (SULEV) compliance margin was somewhat less for the more stringent standards, approximately 50 percent. We believe that the recent California experience is a likely indicator of compliance margins that manufacturers would design for in order to comply with the proposed Tier 3 FTP standards. Thus, a typical Tier 2 Bin 5 vehicle, performing at 40 percent of the current standard (i.e., at about 64 mg/mi) would need improvements sufficient to reach about 15 mg/mi (50 percent of a 30 mg/mi standards).

To understand how the several currently-used technologies described below could be used by manufacturers to reach the stringent proposed Tier 3 NMOG+NO_X standards, it is helpful to consider emissions formation in common modes of operation for gasoline engines, or modal analysis.[222] The primary challenge faced by manufacturers for producing Tier 3 compliant light-duty gasoline vehicle powertrains would be to reduce the emissions during cold-start operation which, based on modal analysis of a gasoline powered vehicle being operated on the FTP cycle, occurs during about the first 50 seconds after engine start. Thus, effective control of

[221] The current Tier 2 program does not combine NMOG and NO_X emissions into one fleet-average standard. The fleet-average standard in that program is for NO_X emissions alone.

[222] A modal analysis provides a second-by-second view of the total amount of emissions over the entire cycle being considered.

these cold-start emissions would be the primary technological goal of manufacturers complying with the proposed Tier 3 FTP standards. As discussed below, light-duty manufacturers are already applying several technologies capable of significant reductions in these cold start emissions to vehicles currently on the road.

b. SFTP NMOG+NO_X Standards

The increase in the stringency of the SFTP NMOG+NO_X standards, specifically across the US06 cycle, would generally only require additional focus on fuel control of the engines and diligent implementation of new technologies that manufacturers are already introducing or are likely to introduce in response to the current and 2017 LD GHG emission standards. These include downsized gasoline direct injection (GDI) and turbocharged engines, which may also include improvements to the engine and emission control hardware to tolerate higher combustion and exhaust temperatures expected in these future GHG-oriented engine designs. The upgraded materials or components would enable manufacturers to rely less on fuel enrichment during high-speed/high-load operation to protect components from overheating. This fuel enrichment is currently the source of elevated VOC, NO_X, and PM emissions seen in a subset of the current Tier 2 fleet.

With respect to enrichment, changes to the fuel/air mixture by increasing the fuel fraction has historically been the primary method available to manufacturers to protect the catalyst and other exhaust components from over-temperature conditions. Changing the fuel/air mixture is no longer the only tool available to manufacturers for this purpose. With the application of electronic throttle controls, variable valve timing, exhaust gas recirculation and other exhaust temperature influencing technologies on nearly every light-duty vehicle, the manufacturer has the ability to systematically control the operation and combustion processes of the engine to minimize or altogether avoid areas and modes of operation where thermal issues can occur. While some of these solutions could in some cases result in a small and temporary reduction in vehicle performance (absolute power levels), we believe that it could be an effective way to reduce NMOG+NO_X emissions over the SFTP test.

Additionally, some components, especially catalysts, can experience accelerated thermal deterioration that occurs when operating at higher temperatures for more time than expected under normal operation (e.g., trailer towing, mountain grades). Some upgrades of existing vehicle emission control technology, like catalyst substrates and washcoats may be required to limit thermal deterioration and ensure vehicle emissions compliance throughout the useful life of the vehicle.

In order to assess the technical feasibility of a 50 mg/mi NMOG+NO_X national fleet average SFTP standard, EPA conducted an analysis of SFTP levels of Tier 2 and LEV II vehicles. The analysis was performed on the US06 results from current Tier 2 and LEV II vehicles tested in the in-use verification program (IUVP) by manufacturers and submitted to EPA. This analysis provided a baseline for the current Tier 2 and LEV II fleet emissions performance, as well as the SFTP emissions performance capability of the cleanest vehicles meeting the proposed Tier 3 FTP standards. The analysis concluded that most vehicles in the IUVP testing program are already capable of meeting the composite SFTP standard of 50 mg/mi when the Tier 3 FTP standard levels are factored into the composite calculation. With the technological improvements already underway as discussed above, we believe all 2017 and later vehicles would be able to comply with the proposed SFTP standards, directly, or through the flexibility of the averaging, banking and trading program. For further information on the analysis see Chapter 1 of the draft RIA.

c. FTP and SFTP PM Standards

As described above for NMOG+NO_X over the SFTP, the increase in the stringency of the FTP and SFTP PM standards would generally also only require additional focus on fuel control of the engines and diligent implementation of new technologies like gasoline direct injection (GDI) and turbocharged engines. Some upgrades of existing vehicle emission control technology may be required to ensure vehicle emissions performance is maintained throughout the useful life of the vehicle. These upgrades may include improvements to the engine to control wear that could result in increased PM from oil consumption and selection of GDI systems that would be capable of continuing to perform optimally even as the systems age.

We based our conclusions about the ability of manufacturers to meet the proposed PM standards largely on the PM performance of the existing fleet, both on the FTP and SFTP. In the case of FTP testing of current vehicles, data on both low and high mileage light-duty vehicles demonstrate that the majority of vehicles are currently achieving levels at or below the proposed Tier 3 FTP standards.

The testing results can be found in Chapter 1 of the draft RIA. A small number of vehicles are at or just over the proposed FTP PM standard at low mileage and could require calibration changes and/or catalyst changes to meet the new standards. It is our expectation that the same calibration and catalyst changes required to address NMOG would also provide the necessary PM control. Vehicles that currently have higher PM emissions over the FTP or SFTP at higher mileages would likely be required to control oil consumption and combustion chamber deposits.

We also analyzed PM test data on US06 emissions for current Tier 2 vehicles. The data show that many vehicles are already at or below the proposed standards on the US06. Vehicles that have high PM emission rates on the US06 would likely need to control enrichment, and oil consumption particularly later in life. As described above for SFTP NMOG+NO_X control, enrichment can be more accurately managed through available electronic engine controls. The strategies for reducing oil consumption are similar to those described above for controlling oil consumption on the FTP. However, given the higher engine speeds experienced on the US06 and the increase in oil consumption that can accompany this kind of operation, manufacturers would most likely focus on oil sources stemming from the piston to cylinder interface and positive crankcase ventilation (PCV).

Manufacturers have informed us that they have already reduced or are planning to reduce the oil consumption of their engines by improved sealing of the paths of oil into the combustion chamber and improved piston-to-cylinder interfaces. They are already taking or considering these actions to address issues of customer satisfaction and cost of ownership. In addition, many vehicle manufacturers acknowledge the relationship between combustion chamber deposits and PM formation and are actively pursuing design changes to mitigate fuel impingement within the combustion chamber and its commensurate PM effects. Both types of controls are being widely applied by manufacturers today.

d. Technologies Manufacturers Are Likely To Apply

Most of the technologies expected to be applied to light-duty vehicles to meet

the stringent proposed standards would address the emissions control system's ability to control emission during cold start. The effectiveness of current vehicle emissions control systems depends in large part on the time it takes for the catalyst to light off, which is typically defined as the catalyst reaching a temperature of 250 °C. In order to improve catalyst light-off, we expect that manufacturers would add technologies that provide heat from combustion more readily to the catalyst or improve the catalyst efficiency at lower temperatures. These technologies include calibration changes, thermal management, close-coupled catalysts, catalyst platinum group metals (PGM) loading and strategy, and secondary air injection, all which generally improve emission performance of all pollutants. In some cases where the catalyst light-off and efficiency are not enough to address the cold start NMOG emissions, hydrocarbon adsorbers may be applied to trap hydrocarbons until such time that the catalyst is lit off. Note that with the exception of hydrocarbon adsorbers each of these technologies addresses NMOG, NO_X, and PM performance. The technologies are described in greater detail below. Additional information on these technologies can also be found in Chapter 1 of the RIA.

- Engine Control Calibration Changes—These include changes to retard spark and/or adjust air/fuel mixtures such that more combustion heat is created during the cold start. Control changes may include injection strategies in GDI applications, unique cold-start variable valve timing and lift, and other available engine parameters. Engine calibration changes can affect NMOG, NO_X and PM emissions.
- Catalyst PGM Loading—Additional PGM loading, increased loading of other active materials, and improved dispersion of PGM and other active materials in the catalyst provide a greater number of sites available to catalyze emissions and addresses NMOG, NO_X and PM emissions. Catalyst PGM loading, when implemented in conjunction with low sulfur gasoline, will effectively eliminate NO_X emissions under warmed-up conditions.
- Thermal Management—This category of technologies includes all design attributes meant to conduct the combustion heat into the catalyst with minimal cooling. This includes insulating the exhaust piping between the engine and the catalyst, reducing the wetted area of the exhaust path, reducing the thermal mass of the exhaust system, and/or using close-coupled catalysts (i.e., the catalysts are packaged as close as possible to the engine's cylinder head to mitigate the cooling effects of longer exhaust piping). Thermal management technologies primarily address NMOG emissions, but also affect NO_X and PM emissions.
- Secondary Air Injection—By injecting air directly into the exhaust stream, close to the exhaust valve, combustion can be maintained within the exhaust, creating additional heat by which to increase the catalyst temperature. The air/fuel mixture must be adjusted to provide a richer exhaust gas for the secondary air to be effective.
- Hydrocarbon Adsorber—Traps hydrocarbons during a cold start until the catalyst lights off, and then releases the hydrocarbons to be converted by the catalyst.
- Gasoline Sulfur—The relative effectiveness for NMOG and NO_X control of the exhaust-catalyst related technologies are constrained by gasoline fuel sulfur levels. Thus, reduced sulfur in gasoline is an enabling technology to achieve the standards and maintain this performance during in-use operation. We discuss the relationship between gasoline sulfur and emissions in greater detail in Section IV.6 below and in the draft RIA.

Discussions between EPA, CARB, vehicle manufacturers, and major component suppliers indicated that large light-duty trucks (e.g., pickups and full-size sport utility vehicles (SUVs) in the LDT3 and LDT4 categories) would be the most challenging light-duty vehicles to bring into compliance with the proposed Tier 3 NMOG+NO_X standards at the 30 mg/mi corporate average emissions level. A similar challenge was addressed when large light-duty trucks were brought into compliance with the Tier 2 standards over the past decade. Figure IV–1 provides a graphical representation of the effectiveness of Tier 3 technologies for large light-duty truck applications. A compliance margin is shown in both cases. Note that the graphical representation of the effectiveness of catalyst technologies on NO_X and NMOG when going from Tier 2 to Tier 3 levels also includes a reduction in gasoline sulfur levels from 30 ppm to 10 ppm.

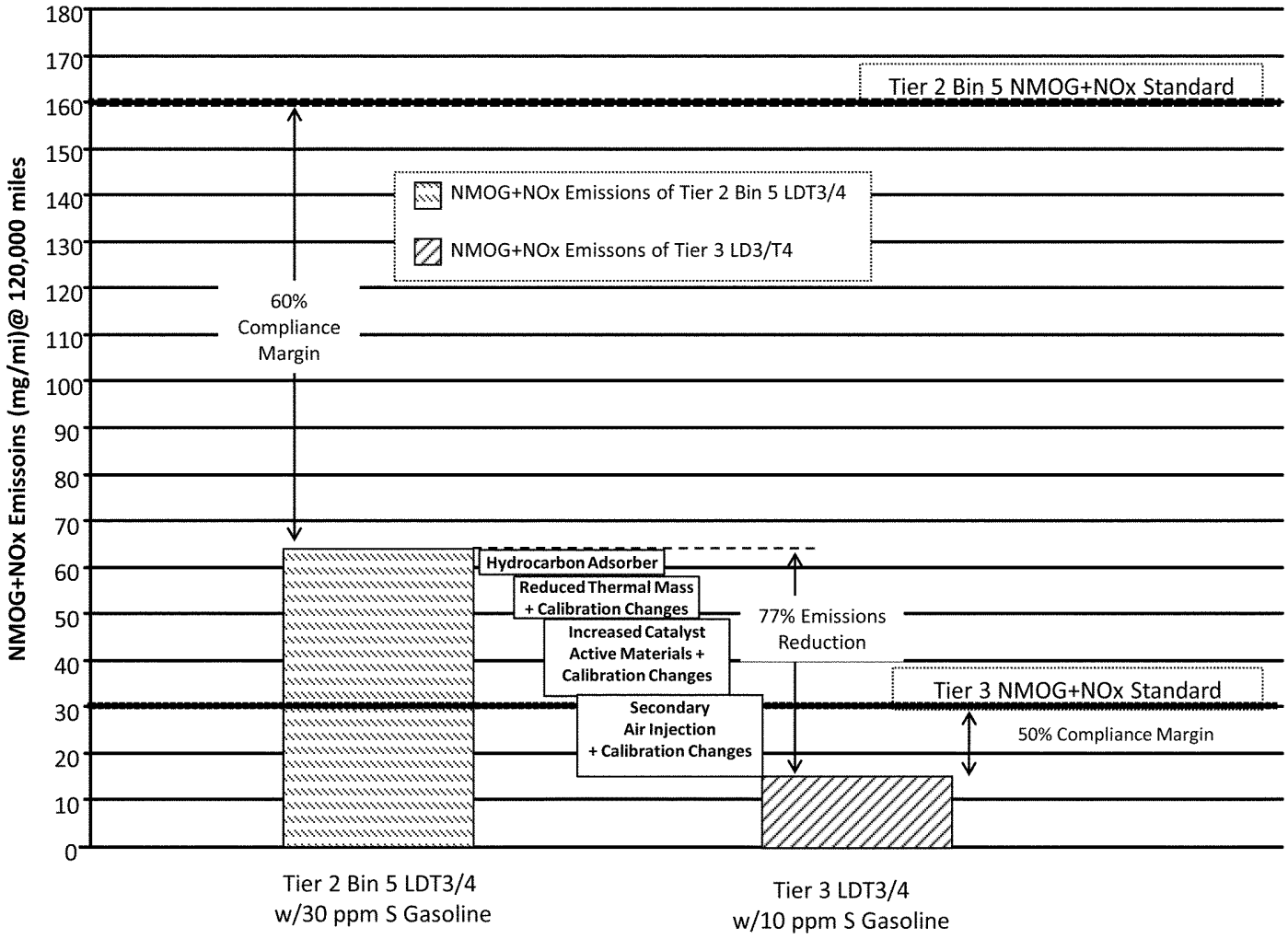

Figure IV-1: Contribution of Tier 3 Technologies to Large Light-Duty Truck Compliance[223]

6. Impact of Gasoline Sulfur Control on the Feasibility of the Proposed Vehicle Emission Standards

a. Fuel Sulfur Impacts on Exhaust Catalysts

Modern three-way catalytic exhaust systems utilize platinum group metals (PGM), metal oxides and other active materials to selectively oxidize organic compounds and carbon monoxide in the exhaust gases. These systems simultaneously reduce nitrogen oxides when air-to-fuel ratio control operates in a condition of relatively low amplitude/high frequency oscillation about the stoichiometric point. Sulfur is a well-known catalyst poison. There is a large body of work demonstrating sulfur inhibition of the emissions control performance of PGM three-way exhaust catalyst systems.[224 225 226 227 228 229 230 231 232 233] The nature of sulfur interactions with washcoat materials, active catalytic

[223] The technologies and levels of control in this figure are based on a combination of confidential business information submitted by auto manufacturers and suppliers, public data, and EPA staff engineering judgment.

[224] Beck, D.D., Sommers, J.W., DiMaggio, C.L. (1994). Impact of sulfur on model palladium-only catalysts under simulated three-way operation. Applied Catalysis B: Environmental 3, 205–227.

[225] Beck, D.D., Sommers, J.W. (1995). ''Impact of sulfur on the performance of vehicle aged palladium monoliths.'' Applied Catalysis B: Environmental 6, 185–200.

[226] Beck, D.D., Sommers, J.W., DiMaggio, C.I. (1997). Axial characterization of oxygen storage capacity in close coupled lightoff and underfloor catalytic converters and impact of sulfur. Applied Catalysis B: Environmental 11, 273–290.

[227] Waqif, M., Bazin, P., Saur, O. Lavalley, J.C., Blanchard, G., Touret, O. (1997), Study of ceria sulfation. Applied Catalysis B: Environmental 11, 193–205.

[228] Bazin, P., Saur, O. Lavalley, J.C., Blanchard, G., Visciglio, V., Touret, O. (1997). ''Influence of platinum on ceria sulfation.'' Applied Catalysis B: Environmental 13, 265–274.

[229] Takei, Y., Kungasa, Y., Okada, M., Tanaka, T. Fujimoto, Y. (2000). Fuel Property Requirement for Advanced Technology Engines. SAE Technical Paper 2000–01–2019.

[230] Takei, Y., Kungasa, Y., Okada, M., Tanaka, T. Fujimoto, Y. (2001). ''Fuel properties for advanced engines.'' Automotive Engineering International 109 12, 117–120.

[231] Kubsh, J.E., Anthony, J.W. (2007). The Potential for Achieving Low Hydrocarbon and NO_X Exhaust Emissions from Large Light-Duty Gasoline Vehicles. SAE Technical Paper 2007–01–1261.

[232] Shen, Y., Shuai, S., Wang, J. Xiao, J. (2008). Effects of Gasoline Fuel Properties on Engine Performance. SAE Technical Paper 2008–01–0628.

[233] Ball, D., Clark, D., Moser, D. (2011). Effects of Fuel Sulfur on FTP NO_X Emissions from a PZEV 4 Cylinder Application. SAE Technical Paper 2011–01–0300.

materials and catalyst substrates is complex and varies with catalyst composition and exhaust gas composition and exhaust temperature. The variation of these interactions with exhaust gas composition and temperature means that the operational history of a vehicle is an important factor; continuous light-load operation, throttle tip-in events and enrichment under high-load conditions can all impact sulfur interactions with the catalyst.

Sulfur from gasoline is oxidized during spark-ignition engine combustion primarily to SO_2 and, to a much lesser extent, SO_3^{-2}. Sulfur oxides selectively chemically bind (chemisorb) with, and in some cases react with, active sites and coating materials within the catalyst, thus inhibiting the intended catalytic reactions. Sulfur oxides inhibit pollutant catalysis chiefly by selective poisoning of active PGM, ceria sites, and alumina washcoatings (see Figure IV–2).[234] The amount of sulfur retained by the catalyst is primarily a function of its operating temperature, the active materials and coatings used within the catalyst, the concentration of sulfur oxides in the incoming exhaust gases, and air-to-fuel ratio feedback and control by the engine management system.

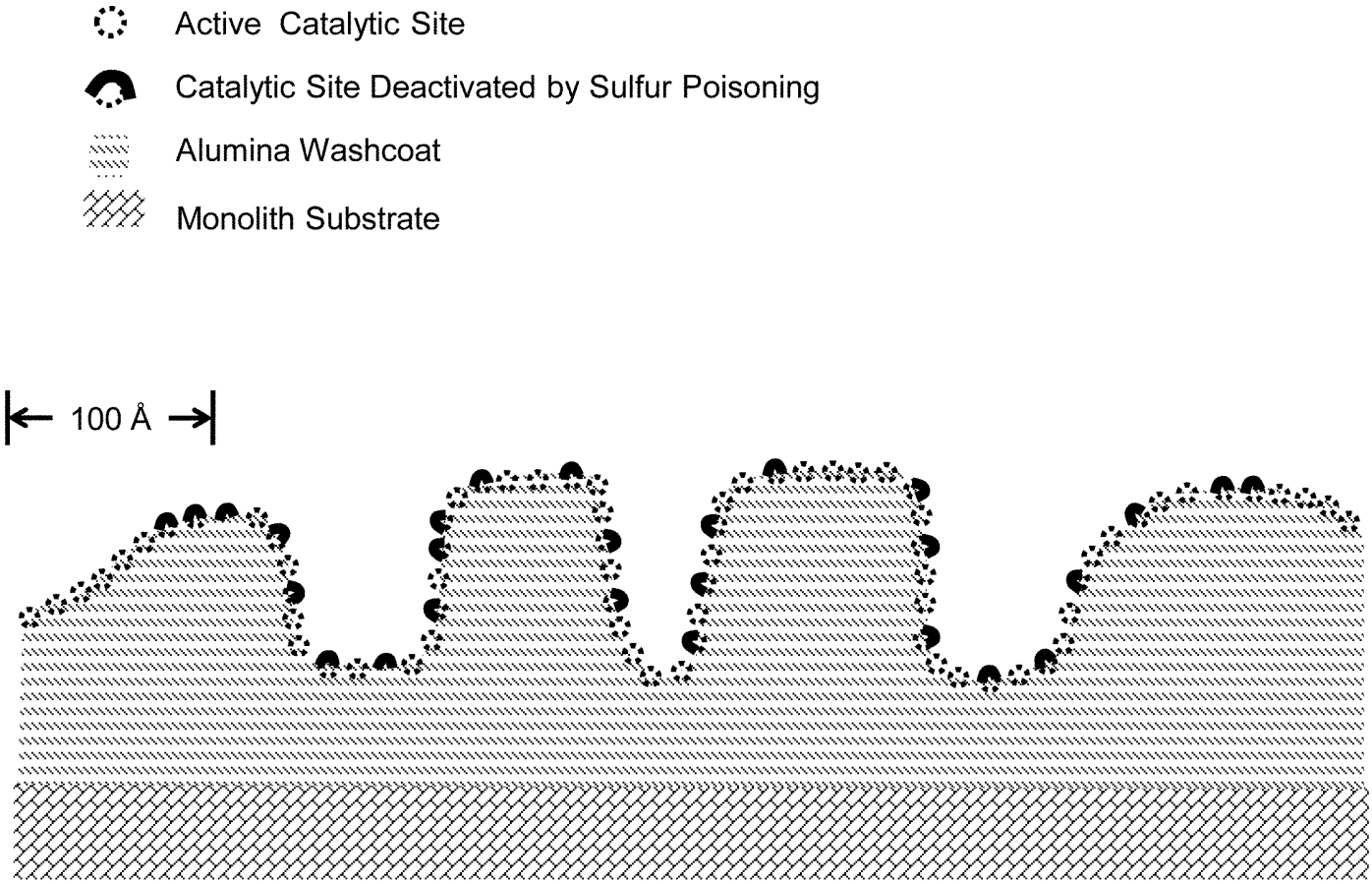

Figure IV-2 Functional schematic showing selective poisoning of active catalytic sites by sulfur compounds. Adapted from Heck and Farrauto 2002.[234]

[234] Heck, R.M., Farrauto, R.J. (2002). Chapter 5: Catalyst Deactivation in *Catalytic Air Pollution Control, 2nd Edition.* John Wiley and Sons, Inc.

Selective sulfur poisoning of platinum (Pt) and rhodium (Rh) is primarily from surface-layer chemisorption. Sulfur poisoning of palladium (Pd) and ceria appears to be via chemisorption combined with formation of more stable metallic sulfur compounds, e.g. PdS and Ce_2O_2S, present in both surface and bulk form (i.e., below the surface layer.[235] [236] [237] [238] Ceria, zirconia and other oxygen storage components (OSC) play an important role that is crucial to NO_X reduction over Rh as the engine air-to-fuel ratio oscillates about the stoichiometric closed-loop control point.[239] Water-gas-shift reactions are important for NO_X reduction over catalysts combining Pd and ceria. This reaction can be blocked by sulfur poisoning and may be responsible for observations of reduced NO_X activity over Pd/ceria catalysts even with exposure to fairly low levels of sulfur (equivalent to 15 ppm in gasoline).[240] [241] Pd is also of increased importance for meeting Tier 3 standards due to its unique application in the closed-coupled-catalysts location required for vehicles certifying to very stringent emission standards. Pd is required in closed-coupled catalysts due to its resistance to high temperature thermal sintering. Sulfur removal from Pd requires rich operation at higher temperatures than required for sulfur removal from other PGM catalysts.[242]

In addition to its interaction with catalyst materials, sulfur can also react with the washcoating itself to form alumina sulfate, which in turn can block coating pores and reduce gaseous diffusion to active materials below the coating surface.[243] This may be a significant mechanism for the observed storage of sulfur compounds at light and moderate load operation with subsequent, rapid release as sulfate particulate matter when high-load, high-temperature conditions are encountered.[244]

Operating the catalyst at a sufficiently high temperature under net reducing conditions (e.g., air-to-fuel equivalence that is net fuel-rich of stoichiometry) can effectively release the sulfur oxides from the catalyst components. Thus, regular operation at sufficiently high temperatures at rich air-to-fuel ratios can minimize the effects of fuel sulfur levels on catalyst active materials and catalyst efficiency. However, it cannot completely eliminate the effects of sulfur poisoning. A study of Tier 2 vehicles in the in-use fleet recently completed by EPA shows that emission levels immediately following high speed/load operation is still a function of fuel sulfur level, suggesting that lower fuel sulfur levels will bring emission benefits unachievable by catalyst regeneration procedures alone.[245] Furthermore, regular operation at these temperatures and at rich air-to-fuel ratios is not desirable, for several reasons. The temperatures necessary to release sulfur oxides are high enough to lead to thermal degradation of the catalyst over time via thermal sintering of active materials. Sintering reduces the surface area available to participate in reactions. Additionally, it is not always possible to maintain these catalyst temperatures (because of cold weather, idle conditions, light load operation) and the rich air-to-fuel ratios necessary can result in increased PM, NMOG and CO emissions. Thus, reducing fuel sulfur levels has been the primary regulatory mechanism to minimize sulfur contamination of the catalyst and ensure optimum emissions performance over the useful life of a vehicle. The impact of gasoline sulfur has become even more important as vehicle emission standards have become more stringent. Some studies have suggested an increase in catalyst sensitivity to sulfur (in terms of percent conversion efficiency) when standards increase in stringency and emissions levels decrease. Emission standards under the programs that preceded the Tier 2 program (Tier 0, Tier 1 and National LEV, or NLEV) were high enough that the impact of sulfur was considered negligible. The Tier 2 program recognized the importance of sulfur and reduced the sulfur levels in the fuel from around 300 ppm to 30 ppm in conjunction with the new emission standards.[246] At that time, very little work had been done to evaluate the effect of further reductions in fuel sulfur, especially on in-use vehicles that may have some degree of catalyst deterioration due to real-world operation.

In 2005, EPA and several automakers jointly conducted a program that examined the effects of sulfur and other gasoline properties, benzene, and volatility on emissions from a fleet of nine Tier 2 compliant vehicles. Section 1.2.3 of the draft RIA provides details of the Mobile Source Air Toxics (MSAT) Study.[247] The study found significant reductions in NO_X, CO and total hydrocarbons (HC) when the vehicles were tested on low sulfur fuel, relative to 32 ppm fuel.[248] In particular, the study found a nearly 50 percent increase in NO_X over the FTP when sulfur was increased from 6 ppm to 32 ppm. Given the prep procedures related to catalyst clean-out and loading used by these studies, these results may represent a ''best case'' scenario relative to what would be expected under more typical driving conditions. Nonetheless, these data suggested the effect of sulfur loading was reversible for Tier 2 vehicles, and that there were likely to be significant emission reductions possible with further reductions in gasoline sulfur level. For more discussion of the impact of gasoline fuel sulfur on the current light-duty vehicle fleet, see Section III.A.

b. EPA Gasoline Sulfur Effects Testing

Both the MSAT and Umicore studies showed the emission reduction potential of lower sulfur fuel on Tier 2 and later technology vehicles over the FTP cycle. However, assessing the potential for reduction on the in-use

[235] Luo, T. Gorte, R.J. (2003). A Mechanistic Study of Sulfur Poisoning of the Water-Gas-Shift Reaction Over Pd/Ceria.'' Catalysis Letters, 85, Issues 3–4, pg. 139–146.

[236] Li-Dun, A., Quan, D.Y. (1990). ''Mechanism of sulfur poisoning of supported Pd(Pt)/Al_2O_3 catalysts for H_2-O_2 reaction.'' Applied Catalysis 61, Issue 1, pg. 219–234.

[237] Heck, R.M., Farrauto, R.J. (2002). Chapter 6: Automotive Catalyst in *Catalytic Air Pollution Control, 2nd Edition.* John Wiley and Sons, Inc.

[238] Maricq, M. M. Chace, R.E., Xu, N., Podsiadlik, D.H. (2002). The Effects of the Catalytic Converter and Fuel Sulfur Level on Motor Vehicle Particulate Matter Emissions: Gasoline Vehicles. Environmental Science and Technology, 36, No. 2 pg. 276–282.

[239] Heck, R.M., Farrauto, R.J. (2002). Chapter 6: Automotive Catalyst in *Catalytic Air Pollution Control, 2nd Edition.* John Wiley and Sons, Inc.

[240] Luo, T. Gorte, R.J. (2003) A Mechanistic Study of Sulfur Poisoning of the Water-Gas-Shift Reaction Over Pd/Ceria. Catalysis Letters, 85, Issues 3–4, pg. 139–146.

[241] Ball, D., Clark, D., Moser, D. (2011). Effects of Fuel Sulfur on FTP NO_X Emissions from a PZEV 4 Cylinder Application. SAE Technical Paper No. 2011–01–0300.

[242] Beck, D.D., Sommers, J.W. (1995) Impact of sulfur on the performance of vehicle aged palladium monoliths. Applied Catalysis B: Environmental 6, 185–200.

[243] Maricq, M. M. Chace, R.E., Xu, N., Podsiadlik, D.H. (2002). The Effects of the Catalytic Converter and Fuel Sulfur Level on Motor Vehicle Particulate Matter Emissions: Gasoline Vehicles. Environmental Science and Technology, 36, No. 2 pg. 276–282.

[244] Maricq, M. M. Chace, R.E., Xu, N., Podsiadlik, D.H. (2002). The Effects of the Catalytic Converter and Fuel Sulfur Level on Motor Vehicle Particulate Matter Emissions: Gasoline Vehicles. Environmental Science and Technology, 36, No. 2 pg. 276–282.

[245] See Chapter 1 of the RIA (Section 1.2.3.2) for more details on this study and its results.

[246] Tier 2 Regulatory Impact Analysis (EPA 420–R–99–023, December 22, 1999), available at *http://epa.gov/tier2/finalrule.htm#regs.*

[247] This test program is described in Chapter 6 of the RIA of the MSAT2 final rulemaking, EPA 420–R–07–002, February 2007, available at *http://www.epa.gov/otaq/regs/toxics/420r07002chp6.pdf.*

[248] See Chapter 6 of the Regulatory Impact Analysis for the Control of Hazardous Air Pollutants from Mobile Sources Final Rule, EPA 420–R–07–002.

fleet requires understanding how sulfur exposure over time impacts emissions, and what the state of loading is for the typical vehicle in the field. In response to these data needs, EPA conducted a new study to assess the emission reductions expected from the in-use Tier 2 fleet with a reduction in fuel sulfur level from current levels. It was designed to take into consideration what was known from prior studies on sulfur build-up in catalysts over time and the effect of periodic regeneration events that may result from higher speed and load operation over the course of day-to-day driving.

The study sample described in this analysis consisted of 81 cars and light trucks recruited from owners in southeast Michigan, covering model years 2007–9 with approximately 20,000–40,000 odometer miles. The makes and models targeted for recruitment were chosen to be representative of high sales vehicles covering a range of types and sizes. Test fuels were two non-ethanol gasolines with properties typical of certification test fuel, one at a sulfur level of 5 ppm and the other at 28 ppm. A nominal concentration of approximately 25 ppm was targeted for the high level to be representative of retail fuel available to the public in the vehicle recruiting area. All emissions data was collected using the FTP cycle at a nominal temperature of 75 °F.

Using the 28 ppm test fuel, emissions data were collected from vehicles in their as-received state as well as following a high-speed/load ''clean-out'' procedure consisting of two back-to-back US06 cycles intended to reduce sulfur loading in the catalyst. A statistical analysis of this data showed highly significant reductions in several pollutants including NO_X and hydrocarbons, suggesting that reversible sulfur loading exists in the in-use fleet and has a measurable effect on aftertreatment performance (Table IV–6). For example, Bag 2 NO_X emissions dropped 32 percent between the pre- and post-cleanout tests on 28 ppm fuel.

TABLE IV–6—AVERAGE CLEAN-OUT EFFECT ON IN-USE EMISSIONS USING 28 PPM TEST FUEL[a]

	NO_X (p-value)	THC (p-value)	CO (p-value)	NMHC (p-value)	CH_4 (p-value)	PM (p-value)
Bag 1	.....	.....	4.7% (0.0737)	.....	.....	15.4% (<0.0001)
Bag 2	31.9% (0.0009)	16.5% (0.0024)	.....	17.8% (0.0181)	15.3% (0.0015)	.....
Bag 3	38.3% (<0.0001)	21.4% (<0.0001)	19.5% (0.0011)	27.8% (<0.0001)	12.0% (<0.0001)	24.5% (<0.0001)
FTP Composite	11.4% (<0.0001)	4.1% (0.0187)	7.6% (0.0008)	3.0% (0.0751)	6.9% (0.0003)	13.7% (<0.0001)
Bag 1–Bag 3	.....	.....	4.2% (0.0714)	.....	.....	.....

[a] The clean-out effect is not significant at $\alpha = 0.10$ when no reduction estimate is provided.

To assess the impact of lower sulfur fuel on in-use emissions, further testing was conducted on a representative subset of vehicles on 28 ppm and 5 ppm fuel with accumulated mileage. A first step in this portion of the study was to assess differences in the effectiveness of the clean-out procedure when done using different fuel sulfur levels. Table IV–7 presents a comparison of emissions immediately following (<50 miles) the clean-out procedures at the low vs. high sulfur level. These results show significant emission reductions for the 5 ppm fuel relative to the 28 ppm fuel immediately after this clean-out; for example, Bag 2 NO_X emissions were 47 percent lower on the 5 ppm fuel vs. the 28 ppm fuel. This indicates that the catalyst is not fully desulfurized, even after a clean out procedure, as long as there is sulfur in the fuel.

TABLE IV–7—PERCENT REDUCTION IN EXHAUST EMISSIONS WHEN GOING FROM 28 PPM TO 5 PPM SULFUR GASOLINE FOR THE FIRST THREE REPEAT FTP TESTS IMMEDIATELY FOLLOWING CLEAN-OUT

	NO_X (p-value)	THC (p-value)	CO (p-value)	NMHC (p-value)	CH_4 (p-value)	PM[a]
Bag 1	5.9% (0.0896)	5.4% (0.0118)	7.3% (0.0023)	4.6% (0.0465)	11.1% (<0.0001)	.....
Bag 2	47.3% (0.0010)	40.2% (<0.0001)	–[a]	34.4% (0.0041)	53.6% (<0.0001)	.....
Bag 3	51.2% (<0.0001)	35.0% (<0.0001)	10.1% (0.0988)	45.0% (<0.0001)	25.4% (<0.0001)	.....
FTP Composite	17.7% (0.0001)	11.2% (<0.0001)	8.3% (0.0003)	8.8% (0.0003)	21.4% (<0.0001)	.....
Bag 1–Bag 3	–[a]	–[a]	5.8% (0.0412)	–[a]	–[a]	

[a] Sulfur level not significant at $\alpha = 0.10$.

To assess the overall in-use reduction between high and low sulfur fuel, a mixed model analysis of all data as a function of fuel sulfur level and miles driven after cleanout was performed. This analysis found highly significant reductions for several pollutants, as shown in Table IV–8. Reductions for Bag 2 NO_X were particularly high, estimated at 59 percent between 28 ppm and 5 ppm overall. For some pollutants, such as Bag 2 NO_X, the model fitting did not find a significant miles-by-sulfur interaction, suggesting the relative differences were not dependent on

miles driven after clean-out. Other results, such as Bag 1 hydrocarbons, did show a significant miles-by-sulfur interaction. In this case, determination of a sulfur level effect for the in-use fleet required estimation of a miles-equivalent level of sulfur loading, which was determined by the cleanout results obtained from the baseline testing on the vehicles as-received.

TABLE IV–8—SUMMARY OF MIXED MODEL RESULTS FOR EMISSION REDUCTIONS WHEN GOING FROM 28 PPM TO 5 PPM SULFUR GASOLINE, ADJUSTED FOR IN-USE SULFUR LOADING (MILEAGE ACCUMULATION) WHERE APPROPRIATE

	NO_X (p-value)	THC (p-value)	CO (p-value)	NMHC (p-value)	CH_4 (p-value)	NO_X+NMOG (p-value)	PM[a]
Bag 1	10.7% (0.0033)	[b]8.5% (0.0382)	[b]7.5% (0.0552)	7.5% (< 0.0001)	[b]13.9% (<0.0001)	N/A	
Bag 2	59.2% (<0.0001)	48.8% (<0.0001)	–[a]	[b]44.8% (0.0260)	49.9% (<0.0001)	N/A	
Bag 3	62.1% (<0.0001)	40.2% (<0.0001)	20.1% (<0.0001)	49.9% (<0.0001)	29.2% (<0.0001)	N/A	
FTP Composite	[b]23.0% (0.0180)	[b]13.0% (0.0027)	[b]11.9% (0.0378)	[b]10.6% (0.0032)	[b]25.8% (<0.0001)	17.3% (0.0140)	
Bag 1–Bag 3	–[a]	5.2% (0.0063)	4.3% (0.0689)	5.1% (0.0107)	4.6% (0.0514)	N/A	

[a] Sulfur level not significant at $\alpha = 0.10$. For THC Bag 1 and CH_4 Bag 1, because the effect of clean-out was not statistically significant, the reduction estimates are based on the estimates of least squares means.
[b] Model with significant sulfur and mileage interaction term.

Major findings from this study include:

- Reversible sulfur loading is occurring in the in-use fleet of Tier 2 vehicles and has a measureable effect on emissions of NO_X, hydrocarbons, and other pollutants of interest.
- The effectiveness of high speed/load procedures in restoring catalyst efficiency is limited when operating on higher sulfur fuel.
- Reducing fuel sulfur levels from current levels to levels in the range of the proposed gasoline sulfur standards would be expected to achieve significant reductions in emissions of NO_X, hydrocarbons, and other pollutants of interest in the in-use fleet.

The overall reductions found in this study are in agreement with other low sulfur studies conducted on Tier 2 vehicles. The magnitude of NO_X and HC reductions found in this study when switching from 28 ppm to 5 ppm fuel are consistent with those found in MSAT and Umicore studies mentioned above. For further details regarding the Tier 2 In-Use Gasoline Sulfur Effects Study, see the draft report on this work.[249]

c. Fuel Sulfur Impacts on Vehicles at the Proposed Tier 3 Levels

As discussed in previous sections, the Tier 3 Program would reduce fleet average NMOG+NO_X emissions by over 80 percent. The feasibility of the proposed 30 mg/mi NMOG+NO_X fleet average standard depends on a degree of emissions control from exhaust catalyst systems that will require gasoline at 10 ppm sulfur or lower. The most likely control strategies would involve using exhaust catalyst technologies and powertrain calibration primarily focused on reducing cold-start emissions of NMOG and on both cold-start and warmed-up (running) emissions of NO_X. An important part of this strategy, particularly for larger vehicles having greater difficulty achieving cold-start NMOG emissions control, would be to reduce NO_X emissions to near-zero levels. This would allow sufficient NMOG compliance margin to allow vehicles to meet the combined NMOG+NO_X emissions standards for their full useful life.

Achieving the proposed Tier 3 emission standards would require very careful control of the exhaust chemistry and exhaust temperatures to ensure high catalyst efficiency. The impact of sulfur on OSC components in the catalyst makes this a challenge even at relatively low (10 ppm) gasoline sulfur levels. NO_X conversion by exhaust catalysts is strongly influenced by the OSC components like ceria. Ceria sulfation may play an important role in the degradation of NO_X emission control with increased fuel sulfur levels observed in the MSAT, Umicore and EPA Tier 2 In-Use Gasoline Sulfur Effects studies.[250]

Light-duty vehicles certified to CARB SULEV and federal Tier 2 Bin 2 exhaust emission standards accounted for approximately 3.1 percent and 0.4 percent, respectively of vehicle sales for MY2009. Light-duty vehicles certified to SULEV under LEV II are more typically certified federally to Tier 2 Bin 3, Bin 4 or Bin 5, and vehicles certified to SULEV and Tier 2 Bins 3–5 comprised approximately 2.5 percent of sales for MY2009. In particular, nonhybrid vehicles certified in California as SULEV are not certified to federal Tier 2 Bin 2 emissions standards even though the numeric limits for NO_X and NMOG are shared between the California LEV II and federal Tier 2 programs for SULEV and Bin 2. Confidential business information shared by the auto companies indicate that the primary reason is an inability to demonstrate compliance with SULEV/Bin 2 emission standards after vehicles have operated in-use on gasoline with greater than 10 ppm sulfur and with exposure to gasoline up to the Tier 2 80 ppm gasoline sulfur cap. While vehicles certified to the SULEV and Tier 2 Bin 2 standards both demonstrate compliance using certification gasoline with 15–40 ppm sulfur content, in-use compliance of SULEV vehicles in California occurs after operation on gasoline with an average of 10 ppm sulfur and a maximum cap of 30 ppm sulfur while federally certified vehicles operate on gasoline with an average of 30 ppm sulfur and a maximum cap of 80 ppm sulfur. Although the SULEV and Tier 2 Bin 2 standards are numerically equivalent, the increased sulfur exposure of in-use vehicles certified under the federal Tier 2 program results in a need for a higher emissions compliance margin to take into account the impact of in-use gasoline sulfur on full useful life vehicle emissions. As a result, vehicles certified

[249] U.S. EPA. 2013. ''The Effects of Fuel Sulfur Level on Emissions from Tier 2 Vehicles In-Use.'' EPA–420–D–13–003. Available in the docket for this rule.

[250] Heck, R.M., Farrauto, R.J. (2002). Chapter 6: Automotive Catalyst in *Catalytic Air Pollution Control, 2nd Edition*. John Wiley and Sons, Inc.

to California SULEV typically certify to emissions standards under the federal Tier 2 program that are 1–2 certification bins higher (e.g., SULEV certified federally as Tier 2 Bin 3 or Bin 4) in order to ensure in-use compliance with emissions standards out to the full useful life of the vehicle when operating on higher-sulfur gasoline.

Emissions of vehicles certified to the SULEV standard of the California LEV II program, or the equivalent Tier 2 Bin 2 standards, can provide some insight into the impact of fuel sulfur on vehicles at the very low proposed Tier 3 emissions levels. Vehicle testing by Toyota of LEV I, LEV II ULEV and prototype SULEV vehicles showed larger percentage increases in NO_X and HC emissions for SULEV vehicles as gasoline sulfur increased from 8 ppm to 30 ppm, as compared to other LEV vehicles they tested. Testing of a SULEV-certified PZEV vehicle by Umicore showed a pronounced, progressive trend of increasing NO_X emissions (referred to as ''NO_X creep'') when switching from a 3 ppm sulfur gasoline to repeated, back-to-back FTP tests using 33 ppm sulfur gasoline.[251] The PZEV Chevrolet Malibu, after being aged to an equivalent of 150,000 miles, demonstrated emissions at a level equivalent to the compliance margin for the Tier 3 Bin 30 NMOG+NO_X standard when operated on 3 ppm sulfur fuel and for at least one FTP test after switching to 33 ppm certification fuel. Following operation over 2 FTP cycles on 33 ppm sulfur fuel, NO_X emissions alone were more than double the proposed Tier 3 30 mg/mi NMOG+NO_X standard.[252] This represents a NO_X percentage increase that is approximately 2–3 times of what has been reported for similar changes in fuel sulfur level for Tier 2 and older vehicles over a similar difference in fuel sulfur.[253] [254] There are no LDTs larger than LDT2 and no larger non-hybrid LDVs. We expect that additional catalyst technologies, for example increasing catalyst surface area (volume or substrate cell density) and/or increased PGM loading, would need to be applied to larger vehicles in order to achieve the catalyst efficiencies necessary to comply with the proposed Tier 3 standards. Any sulfur impact on catalyst efficiency would have a larger impact on vehicles and trucks that rely more on very high catalyst efficiencies in order to achieve very low emissions.

The negative impact of gasoline sulfur on catalytic activity and the resultant loss of exhaust catalyst effectiveness to chemically reduce NO_X and oxidize NMOG and air toxic emissions occurs across all vehicle categories. However, the impact of gasoline sulfur on NO_X emissions control of catalysts in the fully-warmed-up condition is particularly of concern for larger vehicles (the largest LDVs and LDT3s, LDT4s, and MDPVs). Manufacturers face the most significant challenges in reducing cold-start NMOG emissions for these vehicles. Because of the need to reach near-zero NO_X levels, any significant degradation in NO_X emissions control over the useful life of the vehicle would likely prevent some if not most larger vehicles from reaching a combined NMOG+NO_X low enough to comply with the 30 mg/mi fleet-average standard. These vehicles represent a sufficiently large segment of light-duty vehicle sales now and in the foreseeable future that their emissions could not be offset (and thus the fleet-average standard achieved) by certifying vehicles to bins below the fleet average. Any degradation in catalyst performance due to gasoline sulfur would reduce or eliminate the margin necessary to ensure in-use compliance with the proposed Tier 3 emissions standards. Certifying to a useful life of 150,000 miles versus the current 120,000 miles would further add to manufacturers' compliance challenge for Tier 3 large light trucks (See Section IV.7.b below for more on the useful life requirements.)

d. Gasoline Sulfur Control Required To Meet Tier 3 Emissions Standards

The impact of gasoline sulfur poisoning on exhaust catalyst performance and the relative stringency of the Tier 3 standards, particularly for larger vehicles and trucks, when considered together make a compelling argument for the virtual elimination of sulfur from gasoline. As discussed in Section V.A.2, the proposed 10-ppm standard for sulfur in gasoline represents the lowest practical limit from a standpoint of fuel production, handling and transport. While lowering gasoline sulfur to levels below 10 ppm would further help ensure in-use vehicle compliance with the Tier 3 standards, the Agency believes that a gasoline sulfur standard of 10 ppm would allow compliance by gasoline-fueled engines with a national fleet average of 30 mg/mi NMOG+NO_X. The level of the proposed Tier 3 standards was considered in light of a 10-ppm average sulfur level for gasoline. Not only should a 10-ppm sulfur standard enable vehicle manufacturers to certify their entire product line of vehicles to the Tier 3 fleet average standards, but based on the results of testing both Tier 2 vehicles and SULEV vehicles as discussed above, reducing gasoline sulfur to 10 ppm should enable these vehicles to maintain their emission performance in-use over their full useful life. It is important to note that while the preceding discussion focused on gasoline sulfur control, spark ignition engines operating on other fuels (i.e., CNG, LPG, E85) and utilizing a three way catalyst systems for control of emission are similarly affected by the sulfur levels in the fuel. We invite comment on all aspects of our analysis of gasoline sulfur effects and our conclusions, especially comments that include any additional relevant testing data.

7. Other Provisions

a. Early Credits

The California LEV III program is scheduled to begin at least two model years earlier than the proposed federal Tier 3 program.[255] As stated earlier, EPA proposes to implement the Tier 3 standards in MY 2017, for vehicles 6,000 lbs GVWR and less, and in MY 2018 for vehicles over 6,000 lbs GVWR. As a result, LEV III vehicles sold in California beginning in MY 2015 will be required to meet a lower fleet average NMOG+NO_X level than the federal fleet is meeting at that time. In addition, the California NMOG+NO_X standards will continue to decline resulting in the gap growing between the current federal program and LEV III. The early credit program we are proposing is designed to accomplish three goals: (1) Encourage manufacturers to produce a cleaner federal fleet earlier than otherwise required; (2) provide needed flexibility to the manufacturers to facilitate the ''step down'' from the current Tier 2 Bin 5 fleet average required in MY 2016 to the LEV III-based declining fleet average in MY 2017; and (3) create a Tier 3 program that is equivalent in stringency to the LEV III program such that manufacturers will be able to produce a 50-state fleet at the earliest opportunity.

The first provision that we are proposing to address these goals is to allow manufacturers to generate early federal credits against the current Tier 2

[251] Heck, R.M., Farrauto, R.J. (2002). Chapter 6: Automotive Catalyst in *Catalytic Air Pollution Control, 2nd Edition.* John Wiley and Sons, Inc.

[252] Ball, D., Clark, D., Moser, D. (2011). Effects of Fuel Sulfur on FTP NO_X Emissions from a PZEV 4 Cylinder Application. SAE Technial Paper No. 2011–01–0300.

[253] Butler, A. and Choi, D. (2012). The Effects of Fuel Sulfur Level on Emissions In-Use Tier 2 Vehicles. Found in the docket, EPA–HQ–OAR–2011–0135.

[254] Shapiro, E. (2009). National Clean Gasoline—An Investigation of Costs and Benefits. Published by the Alliance of Automobile Manufacturers.

[255] The LEV III program as approved by the California Air Resources Board, January 2012.

Bin 5 requirement [256] in MYs 2015 and 2016 for vehicles under 6,000 lbs GVWR and MYs 2016 and 2017 for vehicles greater than 6,000 lbs GVWR. (Early credits would only be available for manufacturers complying under the primary program (declining fleet average), not the alternative phase-in approach (Section IV.A.3.a above). In order to generate these credits, manufacturers would sum the NMOG and NO_X certification standards for each federally certified Tier 2 vehicle and calculate an NMOG+NO_X fleet average. Credits would be based on the difference between the new, cleaner, fleet average and the Tier 2 Bin 5 requirement (160 mg/mi total of NMOG and NO_X). We expect that manufacturers could accomplish this by certifying existing Tier 2 vehicles to a lower fleet average, mainly for the higher bins as the current sulfur content in gasoline would preclude them from certifying the cleanest bins federally (Our analysis, presented in Section IV.A.5 above and Chapter 1 of the draft RIA, shows that many vehicles currently certified to Tier 2 Bin 5 could likely be certified to a lower bin with some reduction in compliance margin; e.g., from Bin 5 to Bin 4 or Bin 3.) We expect to realize early environmental benefits, as the result of a cleaner federal fleet, that justify the credits generated.

We believe that this provision would help us realize both our first and our second goals. For example, a manufacturer certifying their federal fleet to Tier 2 Bin 4 would earn 50 mg/mi of NMOG+NO_X credits per vehicle (i.e., 160 mg/mi minus 110 mg/mi) which should encourage manufacturers to certify a cleaner federal fleet and provide ample opportunity for credit generation to facilitate the ''step down'' in stringency. However, if we allowed excessive early credits to be generated it could allow manufacturers to delay their federal compliance with the same fleet average as California for several years. This would be in direct conflict with our third goal of creating a program of equal stringency to the California program as early as possible. In order to address this concern we are proposing that the application of the early federal credits be constrained under the following conditions:

- Early federal credits generated under the provision described above could be used without limitation in MY 2017.
- Credits used for compliance in MY 2018 and beyond would be capped at an amount equal to the lesser of the manufacturer's federal credits as calculated above or the manufacturer's LEV III credits multiplied by the ratio of 50-state sales to California only sales. Calculation of these credits would account for the fact that some LEV III credits may have begun to expire and would no longer be eligible as a basis for Tier 3 early credits.

By capping the available federal credits we believe that the two programs, LEV III and Tier 3 would be at parity starting in 2018 MY. In addition, because the number of federal early credits that could be used would be based on the number of LEV III credits that the manufacturer had generated, there may be additional motivation for manufacturers to over-perform in California during the initial model years.

We are proposing that early credit life be limited to 5 years with no discounting, consistent with the California LEV II and LEV III programs and similar to the basic credit carry-forward provisions of the recent light-duty and heavy-duty greenhouse gas rules. We are not proposing any carry-over of Tier 2 credits for use in the Tier 3 program. We seek comment on the 5-year credit life in the context of the programs goals of harmonization with California LEV III and whether the added flexibility would be advantageous relative to any added burden associated with corresponding record retention requirements.

b. Useful Life

The ''useful life'' of a vehicle is the period of time, in terms of years and miles, during which a manufacturer is responsible for the vehicle's emissions performance.[257] For LDVs and LDTs (including MDPVs) under the Tier 2 program, there have historically been both ''full useful life'' values, approximating the average life of the vehicle on the road, and ''intermediate useful life'' values, representing about half of the vehicle's life. For the Tier 3 program, we are proposing several changes to the current useful life provisions that are appropriate to the proposed standards described above.

Every vehicle manufacturer with which the EPA has met has expressed the desire for a single national vehicle fleet and has indicated an ability and willingness to certify their vehicles to a 150,000 mile, 15 year full useful life in support of that goal, since the LEV III program would apply a single 150,000 mile, 15 year useful life value for all of the new standards. However, the CAA, written at a time when vehicles did not last as long as today, precludes EPA from requiring a useful life value longer than the 120,000 mile (and 10 or 11 year, as applicable) value set in Tier 2, for all LDVs and for LDTs up to 3,750 lbs LVW and up to 6,000 lbs GVWR (LDT1s). For vehicles heavier than these limits (i.e., LDT2s, 3s, 4s, as well as MDPVs, representing a large fraction of the light-duty fleet) we are proposing a 150,000 mile, 15 year useful life value. For the lighter vehicles, we are proposing to continue to apply the 120,000 mile (and 10 or 11 year, as applicable) full useful life requirement from the Tier 2 program. Numerically, we are proposing 120,000 mile useful life NMOG+NO_X standards that are 85 percent of the respective NMOG+ NO_X 150,000 mile standards. (See Chapter 1 of the draft RIA for a description of our analysis of this relationship.) For the lighter vehicles, we propose that manufacturers be allowed to choose to certify to either useful life value in complying with the proposed fleet average and per-vehicle standards.[258] A manufacturer choosing to comply with the 120,000 mile useful life standards for any of their lighter vehicles would demonstrate compliance with the numerically lower fleet-average NMOG+NO_X standards for all LDV and LDT1 families. Standards for all other pollutants [259] would remain the same regardless of whether compliance was at the 120,000 mile or the 150,000 mile useful life periods. If a vehicle manufacturer chose to comply with the 120,000 mile useful life standards for their lighter vehicles, it would be required to separately demonstrate that its larger vehicles complied with the 150,000 mile fleet average standards.

Except for vehicles not required to meet a 150,000 miles useful life and for which a manufacturer chose to apply the 120,000 mile useful life value, we propose that manufacturers be required to certify vehicles to the 150,000 mile useful life beginning with the first model year that a vehicle model is certified to the FTP NMOG+NO_X Bin 70 or lower. This useful-life requirement

[256] Tier 2 standards are not set in the form of NMOG+NO_X. The equivalent Tier 2 Bin 5 fleet average in NMOG+NO_X terms would be equal to 160 mg/mi (90 mg/mi NMOG + 70 mg/mi NO_X).

[257] The useful life of the vehicle should not be confused with the vehicle's emissions warranty. The useful life value is relevant for certification and in-use compliance purposes; the emissions warranty relates to the period during which the manufacturer is obligated to repair or replace failing emission control equipment on a properly maintained vehicle.

[258] CARB has stated that they do not expect to accept vehicles certified under the federal Tier 3 program to a 120,000 mile useful life value for California certification, and thus for meeting California's fleet average NMOG+NO_X standards.

[259] PM, CO, and HCHO

would apply beginning in MY 2017. Beginning in MY 2020, all vehicles would need to certify to the 150,000 mile useful life, regardless of NMOG+NO_X certification bin, unless they are allowed and the manufacturer has chosen to remain at 120,000 mile useful life. (Note that the timing of the requirement to certify on the new test fuel would follow the same approach as for the useful life requirement (i.e., based on the first year a model is certified to Bin 70 or below) as described in Section IV.A.7.c below.)

We request comment on the proposed useful life provisions, including the 85 percent factor we propose to use to establish the standards for the 120,000 mile useful life.

c. Test Fuels

We recognize that test fuels are an important element of a national program. Vehicle manufacturers have emphasized the desire to reduce test burden by producing one vehicle that is tested to a single test procedure and a single fuel and meets both California and federal requirements. Although we have been able to reasonably align the proposed Tier 3 program with the LEV III program in most key respects, we recognize that there would still exist some differences in emissions performance between vehicles operated on the LEV III and Tier 3 certification fuels. The largest differences between the two fuels are the amount of ethanol they contain and the Reid Vapor Pressure (RVP). The proposed Tier 3 NMOG+NO_X standards assume operation on federal certification fuel.

We propose that manufacturers begin to certify vehicles on the new Tier 3 fuels [260] beginning with the first model year that a vehicle model is certified to the FTP NMOG+NO_X Bin 70 or lower, independent of its useful life. The new-fuel requirement would apply beginning in MY 2017. Beginning in MY 2020, all gasoline-fueled models would need to certify on the new fuel, regardless of their certification bin.[261] As discussed in Section IV.A.7.b above, manufacturers would also need to apply the 150,000 mile useful life value to these same vehicles as they begin to be certified to Bin 70 and lower.

During the transition period from Tier 2 fuel to the new Tier 3 and LEV III fuels, manufacturers have indicated a substantial workload challenge of developing and certifying a vehicle to the two new fuels simultaneously. To address this potential workload and certification challenge, we propose that vehicles certified in MY 2015 through 2019 to California LEV III standards using California LEV III certification fuels and test procedures could be used for certifying to EPA standards. (For example, for MY 2015 and 2016, EPA would consider such vehicles to be Tier 2 vehicles, although they could be tested on California LEV III fuel.[262] Similarly, for MY 2017 through 2019, EPA would consider such vehicles to be Interim Tier 3 vehicles, although they could be tested on California LEV III fuel.) For these vehicles only, we would not perform or require in-use exhaust testing on Tier 3 fuel.

California does not have fuel specifications for high altitude testing or cold CO and hydrocarbon testing. For this reason, we are proposing that for vehicles that manufacturers choose to certify using LEV III fuel and test procedures, they can use test fuels meeting either Tier 2 or Tier 3 fuel specifications to comply with these federal-only requirements. We would perform in-use testing for these vehicles on the same fuel as selected by the manufacturer at certification.

Certifications after MY 2019, however, would be required to use the Tier 3 fuel and carry-over certifications using LEV II, LEV III or Tier 2 certification fuels would not be allowed after MY 2019. CARB has indicated that they would accept Tier 3 test data (on federal certification fuel) to obtain a California certificate as early as MY 2015. In this manner manufacturers should be able to avoid compliance testing on more than one fuel as vehicles certified to LEV III using federal certification fuel could obtain Final Tier 3 status.[263]

d. High Altitude Requirements

FTP emission standards are historically designed to be applicable at all altitudes. Under Tier 2, the same FTP emission bin standards applied to vehicles tested at both low and high-altitude. However, fundamental physical challenges exist at high altitude resulting in typically higher emissions during cold starts compared with starts at lower altitudes (i.e., sea level). This expected increase in emissions is primarily due to the lower air density at higher altitudes. Due to the lower air density, the needed volume of the hot combustion exhaust required to quickly heat the catalyst in the first minute after a cold start is reduced. As a result, catalyst light-off is delayed and cold start emissions increase. Vehicles under the Tier 2 program typically had sufficient compliance margins to absorb this increase in emissions during testing under high-altitude conditions. However, given the near-zero standards we are proposing in Tier 3, vehicles will have less compliance margin with which to address the issue.

Under the Tier 3 program, we expect that the emission control technologies selected for low altitude performance would also provide very significant emission control at high altitude.[264] However, as explained above, unique emission challenges exist with operation at higher altitude. The stringency of the Tier 2 standards is such that manufacturers comply with the same standards at all altitudes without the need to design their emission control strategies specifically for the more challenging high altitude operation. The Tier 3 stringency may not allow manufacturers emission control strategies at lower altitude to maintain sufficient compliance margin when tested at higher altitude, therefore requiring manufacturers to design their emission controls specifically for higher altitude.

To avoid requiring special high-altitude emission control technologies, we propose to allow manufacturers the limited relief of complying with the next less-stringent bin for testing at high altitude for vehicles certified at sea level to Bin 20, 30, and 50 (e.g., certifying to Bin 50 for testing at high altitude versus Bin 30 at sea level). For vehicles certified at sea level to Bins 70 and 125, 35 mg/mi of relief will be provided. No relief is proposed for Bin 160.

We do not believe that the impact of the fairly small fraction of overall U.S. driving that occurs in high altitude locations warrants a requirement for additional technologies to be applied specifically for high-altitude conditions. In addition, this provision is intended to be applicable to all Final Tier 3 vehicles for the duration of the Tier 3 program.

[260] This includes fuels used for low temperature and high altitude testing and durability requirements. See Section IV.D below.

[261] Diesel fueled and alternative fueled vehicles would continue to test on the fuels used under the Tier 2 program.

[262] Because the Tier 2 program has NO_X fleet average standards (instead of the NMOG+NO_X fleet average standard of LEV III and Tier 3), manufacturers certifying to LEV III standards in MY 2015 and 2016 would not include such vehicles in their Tier 2 NO_X fleet average calculation. Tier 2 provisions that are not a part of the California program would still apply. For example, high altitude testing, which is only required in the federal program, would still need be performed on federal Tier 2 fuel.

[263] That is, a manufacturer that certifies a vehicle to LEV III in MY 2015 and MY 2016.

[264] *High-altitude conditions* means a test altitude of 1,620 meters (5,315 feet). *Low altitude conditions* means a test altitude less than 549 meters (1,800 feet).

While vehicles would need to meet the Tier 3 standards at all intermediate altitudes, the question remains as to what the value of the standard should be at a given intermediate altitude. We request comment on both the level of the proposed high altitude standards and the appropriate level of the standard at intermediate altitudes. In particular, we seek comment on whether this could be addressed by requiring that all emission control strategies remain in effect at altitudes that are in between the specific altitudes used for high and low altitude testing and that any altitude-related auxiliary emission control device (AECD) must be identified by the manufacturer and justified as not being defeat devices.

TABLE IV–9—PROPOSED HIGH ALTITUDE STANDARDS

Bin	Sea level FTP standard (mg/mi NMOG+NO_X)	Altitude FTP standard (mg/mi NMOG+NO_X)
Bin 160	160	160
Bin 125	125	160
Bin 70	70	105
Bin 50	50	70
Bin 30	30	50
Bin 20	20	30

e. Highway Test Standards

Sustained high-speed operation can result in NO_X emissions that may not be represented on either the FTP or SFTP cycles. Although we are not aware of any serious issues with this mode of operation with current Tier 2 vehicles, we are interested in preventing increases in these NO_X emissions as manufacturers develop new or improved engine and emission control technologies.

For this reason, we are proposing that the same FTP NMOG+NO_X standards proposed above also apply on the Highway Fuel Economy Test (HFET), which is performed as a part of GHG and Fuel Economy compliance testing. Thus, the FTP NMOG+NO_X standard for the bin at which a manufacturer has chosen to certify a vehicle would also apply on the HFET test. For example, if a manufacturer certifies a vehicle to Bin 70, the vehicle's NMOG+NO_X performance over the HFET could not exceed 70 mg/mi. Manufacturers would simply need to ensure that the same emission control strategies implemented for the FTP and SFTP cycles were also effectively utilized during the highway test cycle. We believe that this proposed requirement would not require manufacturers to take any unique technological action, would not add technology costs, and would not add significantly to the certification burden. We request comment on this proposed provision.

f. Interim 4,000 mile SFTP Standards

During the period of the declining NMOG+NO_X standards, we are proposing that interim Tier 3 vehicles meet 4,000 mile SFTP standards, consistent with the existing Tier 2 and LEV II program requirements. The 4,000 mile standards are designed to prevent excessive emission levels from a single vehicle or a single SFTP cycle, which can occur if only a composite approach is taken. Under the Tier 3 program, the proposed composite standards would be fleet average standards that would decline from 2017 until 2025, as described in Section IV.A.4. While this approach is expected to result in fleet-wide reductions in SFTP emissions during all years of the declining standard, the level of the fleet average requirement during the initial years provides an opportunity for backsliding of SFTP emissions on individual vehicles or on individual SFTP cycles. We believe it is appropriate to require any individual Interim Tier 3 vehicle to at a minimum meet the same requirements under the Tier 2 and LEV II programs. Table IV–10 below presents the proposed 4,000 mile SFTP standards for interim Tier 3 vehicles.

TABLE IV–10—PROPOSED 4,000 MILE SFTP EXHAUST STANDARDS FOR INTERIM TIER 3 VEHICLES (GRAMS/MILE)

Vehicle category	US06 NMOG+NO_X	US06 CO	SC03 NMOG+NO_X	SC03 CO
LDV/LDT1	0.14	8.0	0.20	2.7
LDT2	0.25	10.5	0.27	3.5
LDT3	0.4	10.5	0.31	3.5
LDT4	0.6	11.8	0.44	4.0

We believe that vehicles considered to be Final Tier 3 (i.e., they meet the Tier 3 PM requirements, specifically the stringent SFTP PM standards) will have sufficiently robust designs that the 4,000 mile SFTP standards will no longer be necessary. Additionally, once the program reaches the fully phased-in fleet average composite standard of 50 mg/mi in 2025, high SFTP emissions even on a limited portion of a manufacturer's fleet should be effectively mitigated. We seek comment on this proposed 4,000 mile SFTP provision.

g. Phase-In Schedule

As described in Section IV.A.3, under the proposed Tier 3 program, manufacturers would be required to certify each vehicle model to an FTP bin, which would then be used to calculate the NMOG+NO_X fleet average of all of its vehicles. Manufacturers would also need to determine the SFTP levels of each model and calculate the NMOG+NO_X fleet average for the SFTP requirements as described in Section IV.A.4. These separate FTP and SFTP fleet average calculations would satisfy one aspect of certification under the Tier 3 program, specifically the standards associated with each model year.

As described in Sections IV.A.7.b and IV.A.7.c above, the longer (150,000 mile) useful life value, as applicable, and the new Tier 3 certification fuel for exhaust testing would be implemented as manufacturers certified vehicles to more stringent NMOG+NO_X standards, with the threshold to implement both of these provisions being Bin 70. Beginning in MY 2017, any vehicle certified to Bin 70 or lower would be required to be certified on Tier 3 test fuel. In addition, any vehicle certified to Bin 70 or lower that would be required to meet the longer 150,000 mile useful life would be required to do so. Beginning in MY 2020 all vehicles would be required to be certified to on the Tier 3 test fuel, regardless of the bin they are certified to or the useful life they are required to meet.

Manufacturers would also be required to comply with more stringent PM standards on a percent phase-in schedule. Compliance with the PM standards, which is consistent with the CARB LEV III program, would be independent of the fleet average requirements described above. The PM emission standards for FTP and SFTP described in Section IV.A.3 and 4 respectively would be implemented as a

percent phase-in requirement as described below under a basic phase-in schedule or under an optional phase-in schedule.

Vehicles certified to a Tier 3 bin, meeting the requirements of the PM phase-in schedule, and complying with the other Tier 3 requirements (i.e., 150,000 mile useful life (as applicable) and Tier 3 certification fuel, as applicable) would be considered ''Final Tier 3'' compliant vehicles. All other vehicles certified to Tier 3 bins but not yet meeting the PM and other Tier 3 requirements would be considered ''Interim Tier 3'' compliant vehicles. At the completion of the percent phase-in period for PM (2021 for the basic PM phase-in schedule and 2022 for the alternative PM phase-in schedule, as described below), 100 percent of vehicles would need to meet the all Tier 3 requirements and would be considered ''Final Tier 3'' vehicles.

For the PM requirements, each year manufacturers would be required to meet either the basic PM percent phase-in or alternative PM phase-in as described in the following subsections. The basic percent PM phase-in schedule is composed of fixed yearly minimum phase-in percentages that we expect that most manufacturers would meet to comply with the Tier 3 requirements. The alternative PM phase-in schedule provides additional flexibility for manufacturers with product offerings that may not provide sufficient vehicle model granularity to allow for a gradual transition into the Final Tier 3 requirements as described below. In either case, Interim Tier 3 vehicles not yet meeting the Tier 3 PM standards must at a minimum meet the Tier 2 PM full useful life FTP standard of 10 mg/mi and the SFTP weighted composite standard of 70 mg/mi.

i. Basic PM Percent Phase-In Schedule

It is important to note that the percent phase-in of the new Tier 3 standards that we are proposing and the declining fleet average standards to which a manufacturer's fleet is held are separate and independent elements of the Tier 3 program. ''Phase-in'' in this context means the fraction of a manufacturer's fleet that would be required to meet the new Tier 3 PM standards in a given model year. We expect manufacturer fleets to consist of a mix of vehicles certified to Tier 2, LEV II, LEV III and Tier 3 standards throughout the percent phase-in period.

As discussed above, vehicles originally certified to Tier 2, LEV II, and LEV III would be carried over into the Tier 3 program as Interim Tier 3 vehicles. A vehicle would be considered a ''Final Tier 3 vehicle'' when it is certified to one of the Tier 3 bins; meets the Tier 3 PM standards; certifies to the 150,000 useful life value (for LDT2s, LDT3s, LDT4s, and MDPVs); and certifies on the new certification test fuel. Table IV–11 below presents the proposed PM phase-in schedule for Final Tier 3 vehicles.

TABLE IV–11—PM PHASE-IN SCHEDULE FOR FINAL TIER 3 VEHICLES

Model year	2017	2018	2019	2020	2021	2022 and later
Manufacturer's Fleet (%)	20[a]	20	40	70	100	100
Vehicle Types	≤ 6,000 lbs GVWR	All vehicles ≤ 8,500 lbs GVWR and MDPVs				

[a] In 2017 model year, a manufacturer may optionally include vehicles up to 8,500 lbs GVWR and/or MDPVs in its phase-in calculation.

ii. Optional PM Phase-In

The proposed PM percent-of-sales phase-in schedule described above would allow manufacturers with multiple vehicle models to plan the phase-in of those models based on anticipated volumes of each vehicle model. However, manufacturers certifying only a few vehicle models might not benefit from this schedule. This is because, in order to satisfy the phase-in schedule percentages, they might have to over-comply with the required percentages earlier than would a manufacturer with many vehicle models available for the phase-in.

For instance, a manufacturer with only two models that each equally accounted for 50 percent of their sales would be required to introduce (at least) one of the models in MY 2017 meet the PM phase-in requirement of 20 percent in the first year. Because it represented 50 percent of the manufacturer's sales, this model would then also meet the requirements for MY 2018 (20 percent) and MY 2019 (40 percent). To meet the MY 2020 requirement of 70 percent of sales, however, the manufacturer would need to introduce the second Tier 3 vehicle that year. Thus the manufacturer would have introduced 100 percent of its Tier 3 models one year earlier than would have been required of a manufacturer that was able to delay the final 30 percent of its fleet until MY 2021 (by distributing its their models over the entire phase-in period).

To provide for more equal application of this benefit among all manufacturers in the early years of the program, we are proposing an optional ''indexed'' PM phase-in schedule that could be used by a manufacturer to meet its PM percent phase-in requirements. A manufacturer that exceeded the phase-in requirements in any given year would be allowed to, in effect, offset some of the phase-in requirements in a later model year. The optional phase-in schedule would be acceptable if it passes a mathematical test. The mathematical test is designed to provide manufacturers a benefit from certifying to the standards at higher volumes than obligated to under the normal phase-in schedule, while ensuring that significant numbers of vehicles are meeting the new Tier 3 requirements during each year of the optional phase-in schedule. In this approach, manufacturers would weight the earlier years by multiplying their percent phase-in by the number of years prior to MY 2022 (i.e., the second year of the 100 percent phase-in requirement).

The proposed mathematical equation for applying the optional PM phase-in is as follows:

$$(5 \times APP2017) + (4 \times APP2018) + (3 \times APP2019) + (2 \times APP2020) + (1 \times APP2021) \geq 540,$$

where APP is the anticipated phase-in percentage for the referenced model year.

The sum of the calculation would need to be greater than or equal to 540, which is the result when the optional phase-in equation is applied to the primary percent phase-in schedule (i.e., $5 \times 20\% + 4 \times 20\% + 3 \times 40\% + 2 \times 70\% + 1 \times 100\% = 540$).

Applying the proposed optional PM phase-in equation to the hypothetical manufacturer in the example above, the manufacturer could postpone its model introductions by one year each, to MY 2018 and MY 2021. Its calculation would be $(5 \times 0\% + 4 \times 50\% + 3 \times 50\% + 2 \times 50\% + 1 \times 100\% = 550$, and thus the phase-in would be acceptable.

EPA requests comment on the proposed PM phase-in schedules.

h. In-Use Standards

i. NMOG+NO_X

The proposed Tier 3 emission standards would require a substantial migration of emission control technology historically used only on a small percent of the fleet and typically limited to smaller vehicles and engines. While we believe that these technologies can generally be used on any vehicle and are applicable to the entire fleet, manufacturers have less experience with the in-use performance of these technologies across the fleet. For example, technologies that accelerate catalyst warm-up such as catalyst location close to the engine exhaust ports and other advanced thermal management approaches would be new to certain vehicle types, particularly larger vehicles (i.e., LDT3/4s), which have historically not relied on these technologies to meet emission standards.

To help manufacturers address the lack of in-use experience and associated challenges with the expanded introduction of these technologies particularly in the larger vehicles, we are proposing temporarily-relaxed in-use NMOG+NO_X standards that would apply to all vehicles certified to Bins 70 and cleaner as Interim or Final Tier 3 vehicles. The in-use standards would apply during the entire percent phase-in period (i.e., through MY 2021). The proposed in-use standards would be 40 percent less stringent than the certification standards, providing a significant but reasonable temporary cushion for the uncertainties associated with new technologies (or new applications of existing technologies) over the life of the vehicle.

The proposed in-use NMOG+NO_X standards are shown in Table IV–12.

TABLE IV–12—PROPOSED FTP IN-USE STANDARDS FOR LIGHT DUTY VEHICLES AND MDPVS

[mg/mi]

Bin	NMOG+NO_X (mg/mi)
Bin 160	160
Bin 125	125
Bin 70	98
Bin 50	70
Bin 30	42
Bin 20	28

ii. PM

As with the proposed NMOG+NO_X standards, the introduction of new emission control technologies or new applications of existing technologies (e.g., GDI, turbocharging, downsized engines) would create significant uncertainties for manufacturers about in-use performance over the vehicle's useful life. We are proposing a temporary in-use FTP standard for PM of 6 mg/mi for all light duty vehicles and MDPVs certified to the Tier 3 full useful life 3 mg/mi standard. Since the Tier 3 PM standard has a percent phase-in schedule spread over several years, starting in 2017 with full phase-in completed in 2022, we are proposing that the in-use standard apply to all vehicles certified to the new PM standards during the entire percent phase-in period (i.e., through MY 2021).

We are also proposing temporarily-relaxed in-use US06 PM standards. We propose in-use standards 5 mg/mi less stringent than the certification standards, or 15 mg/mi for all light duty vehicles up to and including 6,000 lbs GVWR and 25 mg/mi for all light duty vehicles and light-duty trucks over 6,000 lbs GVWR and MDPVs. Consistent with the FTP in-use standards, these in-use standards would apply to all vehicles certified to the new PM standards during the entire percent phase-in period (i.e., through MY 2021).

EPA requests comment on the proposed in-use standards.

i. FFVs

Because of the physical and chemical differences in how emissions are generated and controlled between vehicles operating on gasoline and ethanol, manufacturers of vehicles designed for high-percentage blends of ethanol (usually called Flexible Fuel Vehicles, or FFVs) may face unique compliance challenges under the proposed Tier 3 program. Historically, under the Tier 2 program, FFVs have only been required to meet all Tier 2 emission standards while operating on gasoline; when operating on the alternative fuel (generally this means a blend that is nominally 85 percent ethanol, or E85), they have only been required to meet the FTP emission standards.

However, E85 use may rise considerably in the future as ethanol use increases in response to the Renewable Fuels Standards (RFS). Thus, it is increasingly important that FFVs maintain their emission performance when operating on E85 across different operating conditions.

We believe that at standard test conditions, requiring manufacturers to meet the Tier 3 standards on any blend of gasoline and ethanol would not add technological feasibility concerns beyond compliance on gasoline alone (or low-level blends like E10 or E15). We are thus proposing that in addition to complying with the Tier 3 requirements when operating on gasoline, FFVs also comply with both the FTP and the SFTP emission standards when operating on E85. This would include the requirement to meet emission standards for both gasoline and E85 for the FTP, highway test, and SFTP emission standards at standard test temperatures (i.e., 68 °F to 86 °F). Since FFVs can operate on any blend of gasoline and ethanol (up to a nominal 85 percent ethanol), the emission requirements apply to operation at all levels of the alternative fuel that can be achieved with commercially available fuels. However, for emission compliance demonstration purposes, we will continue to test on gasoline and the highest available level ethanol.

EPA welcomes comment on this proposed approach to FFV compliance.

j. Credit for Direct Ozone Reduction (DOR) Technology

Since the late 1990s, technologies have been commercialized with which vehicles can remove ozone from the air that flows over the vehicle's coolant radiator. In such direct ozone reduction (DOR) technology, a catalytic coating on the radiator is designed to convert ambient ozone into gaseous oxygen, addressing the air quality concerns about ozone. Detailed technical analyses for the California LEV II and the federal Tier 2 programs showed that when properly designed these systems can remove sufficient ozone from the air to be equivalent to a quantifiable reduction in tailpipe NMOG emissions. In the earlier programs, both California and EPA provided methodologies through which a manufacturer could demonstrate the capability and effectiveness of the ozone-reducing technology and be granted an NMOG credit. A small number of vehicle models with DOR applications received credit under the LEV II program; no manufacturer formally applied for credits under the federal Tier 2 program.

Some manufacturers have expressed an interest in the continued availability of a DOR credit as a part of their potential LEV III and Tier 3 compliance strategies. EPA believes that when a DOR system is shown to be effective in reducing ozone, a credit toward Tier 3 compliance is warranted. We propose that manufacturers following the California methodology for demonstrating effectiveness and calculating a appropriate credit for a DOR system be granted a specific credit toward the NMOG portion of the

NMOG+NO_X standard.[265] As with the California program, such a credit could not exceed 5 mg/mi NMOG. We invite comment on the appropriateness of this proposed DOR credit approach, including the application of the California methodology to the federal Tier 3 program.

k. Credit for Adopting a 150,000-Mile Emissions Warranty

Under the Tier 3 standards proposed above manufacturers would be expected to design their emission control systems to continue to operate effectively for a useful life of 150,000 miles (120,000 miles for some smaller vehicles). However, as with the current Tier 2 program, manufacturers are only required to replace failed emission control components or systems on customers' vehicles for a limited time period, specified in the Clean Air Act (80,000 miles/8 years for key emission control components). EPA believes that voluntary extension of this warranty obligation by manufacturers would provide additional emission reductions by helping ensure that controls continue to operate effectively in actual operation through the full life of the vehicle.

We propose that a manufacturer providing its customers with a robust emission control system warranty of 15 years or 150,000 miles be eligible for a modest credit of 5 mg/mi NMOG+NO_X.[266] Because of the significant liability that manufacturers would be accepting, we do not expect that the use of this credit opportunity would be widespread. However, based on our modeling of the expected deterioration of the emissions of future Tier 3 vehicles absent repair/replacement of failed emission controls, we anticipate that the value to the environment of long emissions warranties in terms of reduced real-world emissions would significantly exceed the 5 mg/mi NMOG+NO_X credit.[267]

We propose to use the same criteria for approving such a credit as does the parallel California program.[268] Thus, in addition to committing to customers that failing emission controls would be repaired or replaced for 15 years/150,000 miles, manufacturers would also need to accept the liability that in the event that a specific emissions control device failed on greater than 4 percent of a vehicle model's production, they would recall the entire production of that model for repair. EPA requests comment on this optional credit opportunity.

l. Averaging, Banking, and Trading of Credits

An averaging, banking, and trading (ABT) program was established in the Tier 2 program to provide for credits to be generated by certifying vehicles that perform better than the standards, for those credits to be used to offset vehicles that perform worse than the standards, and for credits to be banked for later use or traded to other manufacturers. The ABT program is largely unchanged by this Tier 3 proposal. In some cases, especially during the transitional years, there would be specific restrictions on the generation of credits, as described above. Also, we are proposing that Tier 3 credits expire after 5 years, consistent with the LEV II and LEV III programs and similar to the basic credit carry-forward provisions in the recent light-duty and heavy-duty greenhouse gas rules. We invite comment on the ABT program in general, and specific comment on a longer Tier 3 credit life, including any flexibilities that this may provide and any implications for record retention requirements by manufacturers.

m. Tier 3 Transitional Emissions Bins

In discussions with manufacturers, EPA has become aware that some vehicles may continue to be produced as late as MY 2019 that could be certified to Tier 2 Bin 3 or Bin 4 standards. In order to provide manufacturers flexibility in meeting the fleet average standards and thus to further facilitate the transition from Tier 2 to Tier 3, we will allow manufacturers to certify to the combined NMOG+NO_X levels of these bins through MY 2019. Two proposed transitional Tier 3 bins, Bin 110 and Bin 85, would have NMOG+NO_X standards on the FTP of 110 mg/mi and 85 mg/mi, respectively (i.e., the sum of the NMOG and NO_X values from the Tier 2 bins); the associated FTP standards for CO, PM, and HCHO corresponding to these bins would be identical to those for vehicles certified to the proposed Tier 3 Bin 125. Tier 3 SFTP standards would apply to these vehicles, and these vehicles would be included in the Tier 3 p.m. percent phase-in calculations.

n. Compliance Demonstration

In general, we are proposing that manufacturers demonstrate compliance with the proposed Tier 3 light-duty vehicle emission standards in a very similar manner to current Tier 2 vehicle compliance (see § 86.1860 of the proposed regulatory language). However, we propose for Tier 3 that manufacturers calculate their compliance with the fleet average standards and percent phase-in standards based on annual nationwide sales, including sales in California and Clean Air Act Section 177 states. We believe that this approach represents another step toward achieving the goal of an effectively nationwide program as early as possible, which has been a basic principle in EPA's development of this proposed program and broadly supported by vehicle manufacturers. We also believe that basing compliance on nationwide sales may reduce the need for manufacturers to project future sales and track past years' sales in a disaggregated way. Because the proposed Tier 3 provisions will become increasingly consistent with LEV III provisions as the Tier 3 program phases in, we believe that any disproportionate impacts of different mixes of vehicles in different states are unlikely to occur. We seek comment on this approach to compliance demonstration.

This proposed nationwide compliance calculation approach would apply to vehicles as they become subject to the Tier 3 provisions, either the declining fleet-average NMOG+NO_X curves or the percent phase-in PM standards. Were any manufacturer to choose to use the alternative FTP and SFTP phase-ins, which are not a part of the LEV III program, the manufacturer would not include sales in California or in the Section 177 states in its compliance calculations.[269]

B. Tailpipe Emissions Standards for Heavy-Duty Vehicles

1. Overview

We are proposing Tier 3 exhaust emissions standards for heavy-duty vehicles (HDVs) between 8,501 and 14,000 lbs GVWR that are certified to gram per mile standards on a chassis dynamometer. Vehicles in this GVWR range are often referred to as Class 2b (8,501–10,000 lbs) and Class 3 (10,001–14,000 lbs) vehicles, and are typically

[265] EPA is incorporating the CARB DOR methodology by reference.

[266] Manufacturers choosing to comply with the standards for a 120,000 mile useful life for their LDVs and LDT1s would not be eligible for this extended warranty credit for those vehicles.

[267] Beardsley, M, et al. (2013, February). Updates to MOVES for the Tier 3 NPRM. Memorandum to the docket.

[268] EPA is incorporating the CARB extended emission warranty provisions by reference.

[269] If EPA ultimately decided to continue the disaggregated approach to fleet compliance calculations, we could potentially base compliance with the proposed Tier 3 emission requirements on U.S. sales (i.e., sales in non-California and non-Section 177 states).

full-size pickup trucks and work vans certified as complete vehicles.[270] Most are built by companies with even larger light-duty truck markets, and as such they frequently share major design characteristics and potential emissions control technologies with their LDT counterparts. However, in contrast to the largely gasoline-fueled LDT fleet, roughly half of the HD pickup and van fleet in the U.S. is diesel-fueled, which is a consideration in setting emissions standards, as diesel engine emissions and control strategies differ from those of gasoline engines.

Manufacturers of diesel-fueled complete HDVs have the option under existing EPA regulations to satisfy EPA criteria emissions requirements for these vehicles by using engines certified through engine dynamometer testing, but for the most part have chosen to certify whole vehicles on the chassis test. We are proposing to codify this common practice and require that diesel-fueled Class 2b and 3 complete Tier 3 vehicles, like their gasoline-fueled counterparts, be certified to the Tier 3 standards on the chassis test. The current prohibition in 40 CFR 86.1863–07(d) on averaging, banking, and trading (ABT) credit generation and use by chassis-certified diesel HDVs would be replaced by the proposed fleetwide averaging program. We are not proposing changes to the heavy-duty engine certification requirements at this time.

Manufacturers of incomplete HDVs that are sold to secondary manufacturers for subsequent completion (less than 10 percent of the Class 2b and 3 U.S. market) are also allowed under existing EPA regulations to certify via either the chassis or engine test, and those who choose to chassis-certify in the future would be subject to Tier 3 requirements. We are not proposing to mandate chassis certification of incomplete Class 2b and 3 vehicles, but we note that California's LEV III program does include such a requirement for Class 2b and we request comment on doing the same in the federal program. We further note that MDPVs are classified as HDVs under the Clean Air Act but, as in our current Tier 2 program, would be covered as part of our Tier 3 light-duty program discussed in Section IV.A, and not in the proposed program described here.

The key elements of the proposed Tier 3 program for HDVs parallel those proposed for passenger cars and LDTs, with adjustments in standards levels, emissions test requirements, and implementation schedules, appropriate to this sector. These key elements include a combined NMOG+NO_X declining fleet average standard beginning in 2018 and reaching the final, fully phased-in level in 2022, creation of a bin structure for standards, new stringent PM standards phasing in on a separate schedule, changes to the test fuel for gasoline- and ethanol-fueled vehicles, extension of the regulatory useful life to 150,000 miles, and a new requirement to meet standards over the SFTP that would address real-world driving modes not well-represented by the FTP cycle alone. We believe that other requirements already in place for HDV testing and compliance remain appropriate. In particular, we believe the current HDV certification requirement to test at the adjusted loaded vehicle weight (ALVW), equal to vehicle curb weight plus one-half the payload weight, is more appropriate for these heavy-duty work trucks and vans than the LDT requirement to test at curb weight plus 300 lbs. These differences from light-duty requirements also factor into the evaluation of potential control technologies and subsequent choice of standards levels, as discussed below.

As with the proposed light-duty Tier 3 program, we are putting strong emphasis on coordinating this HDV Tier 3 proposal with California's LEV III program for Class 2b and 3 vehicles, referred to in LEV III as medium-duty vehicles (MDVs). The goal is to create a coordinated ''national program'' in which California would accept compliance with Tier 3 standards as sufficient to also satisfy LEV III requirements, thus allowing manufacturers to comply nationwide by marketing a single vehicle fleet. With this goal in mind, we discuss the relationship of the proposed HDV Tier 3 program provisions to LEV III throughout this section. As part of this effort, we are proposing that manufacturers of Tier 3 HDVs calculate compliance with the fleet average standards and percent phase-in standards discussed in this section based on annual nationwide sales, including sales in California and Clean Air Act Section 177 states. This would help to create an effectively nationwide program, which has been a basic principle in EPA's development of this proposed program and broadly supported by vehicle manufacturers. If this proposed approach to HDV fleet compliance calculations is not adopted, EPA could base compliance with the proposed Tier 3 requirements on U.S. sales outside of California and the Section 177 states.

Furthermore, in 2011 EPA and NHTSA set first-ever standards for GHGs and fuel consumption from HD pickups and vans (as well as other heavy-duty vehicles and engines). These standards phase in over 2014–2018, so in developing the Tier 3 HDV proposal we have carefully taken this new program into account to maximize the coordination between the two complementary heavy-duty regulatory programs and avoid inconsistencies.

2. HDV Exhaust Emissions Standards

a. Bin Standards

We are proposing that manufacturers certify HDVs to Tier 3 requirements by having them meet the standards for one of the bins listed in Table IV–13. Manufacturers would choose bins for their vehicles based on their product plans and corporate strategy for compliance with the fleet average standards discussed in Section IV.A.2.b, and once a vehicle's bin is designated, those bin standards apply throughout its useful life. Because the fleet average standards become more stringent over time, the bin mix would gradually shift from higher to lower bins. As in the past, we are proposing numerically higher standards levels for Class 3 vehicles than for Class 2b vehicles, reflective of the added challenge in reducing per-mile emissions from large work trucks designed to carry and tow heavier loads. Also, the proposed standards levels for both Class 2b and Class 3 HDVs are significantly higher than those being proposed for light-duty trucks due to marked differences in vehicle size and capability, and to our requirement to test HDVs in a loaded condition (at ALVW). By conducting emissions testing with loaded vehicles, the heavy-duty program ensures that emissions controls are effective when these vehicles are performing their core function: hauling heavy loads. This is a key difference between the heavy-duty and light-duty truck programs. The proposed bin structure and standards levels are consistent with those in the LEV III program. We request comment on the usefulness of creating additional bins between Bin 0 and the next lowest bin in each vehicle class, as a means of encouraging clean technologies and adding flexibility.

[270] 40 CFR 86.1803–01 defines HDVs to also include motor vehicles at or below 8,500 lbs GVWR that have a vehicle curb weight of more than 6,000 lbs or a basic vehicle frontal area in excess of 45 square feet, and we are proposing that these vehicles also would be subject to the standards and other provisions applicable to Class 2b vehicles discussed in this section.

TABLE IV–13—PROPOSED FTP STANDARDS FOR HDVS

	NMOG+NO_X (mg/mi)	NMOG (mg/mi)	NO_X (mg/mi)	PM (mg/mi)	CO (g/mi)	Formaldehyde (mg/mi)
Class 2b (8,501–10,000 lbs GVWR)						
Bin 395 (interim)	.....	195	200	8	6.4	6
Bin 340 (interim)	.....	140	200	8	6.4	6
Bin 250	250	.....	.....	8	6.4	6
Bin 200	200	.....	.....	8	4.2	6
Bin 170	170	.....	.....	8	4.2	6
Bin 150	150	.....	.....	8	3.2	6
Bin 0	0	.....	.....	0	0	0
Class 3 (10,001–14,000 lbs GVWR)						
Bin 630 (interim)	.....	230	400	10	7.3	6
Bin 570 (interim)	.....	170	400	10	7.3	6
Bin 400	400	.....	.....	10	7.3	6
Bin 270	270	.....	.....	10	4.2	6
Bin 230	230	.....	.....	10	4.2	6
Bin 200	200	.....	.....	10	3.7	6
Bin 0	0	.....	.....	0	0	0

The proposed NMOG and NO_X standards for the highest bins in each class (Class 2b Bin 395 and Class 3 Bin 630) are equal to the current non-methane hydrocarbon (NMHC) and NO_X standards that took full effect in 2009, as well as to equivalent LEV standards in California's LEV II program. These bins are intended as carryover bins. That is, we would expect them to be populated with vehicles that are designed to meet the current standards, and that are being phased out as new lower-emitting vehicle designs phase in to satisfy the proposed Tier 3 fleet average NMOG+NO_X standard. We also consider the next highest bins (Class 2b Bin 340 and Class 3 Bin 570) to be carryover bins, because they likewise can be readily achieved by vehicles designed for today's EPA and California LEV II emissions programs. As the 2018–2022 phase-in progresses, it would become increasingly difficult to produce vehicles in these bins and still meet the fleet average standard. Therefore vehicles in these bins (as well as some others not yet designed to meet Tier 3 PM standards described in Section IV.B.2.d) would be considered ''interim Tier 3'' vehicles, and the bins themselves would be considered ''interim bins.''

To facilitate their use in this carryover function, we are proposing that the interim bins not include SFTP requirements, longer useful life requirements, or requirements to conduct exhaust emissions testing with the proposed new gasoline test fuel discussed in Section IV.D, although testing on this fuel would be allowed. For gasoline-fueled HDVs in all other bins, we are proposing that exhaust emissions testing be conducted with the new test fuel. (See Section IV.D.5 for discussion of our request for comment on extending this requirement to testing of gasoline-fueled heavy-duty engines as well.) In the context of these proposed accommodations for the interim bins, we propose two additional measures to help ensure these bins are focused on their function of helping manufacturers transition to Final Tier 3 vehicles. First, we propose that the interim bins be available only in the phase-in years of the program, that is, through MY 2021, as is appropriate to their interim status.

Second, we are proposing that vehicles in the interim bins meet separate NMOG and NO_X standards, as indicated in Table IV–13, rather than combined NMOG+NO_X standards. This proposed provision is intended to keep a manufacturer from redesigning or recalibrating a vehicle design under combined NMOG+NO_X Tier 3 standards for such purposes as reducing fuel consumption, through means that result in higher NO_X or NMOG emissions than exhibited by today's vehicles, contrary to the intended carryover function of the interim bins. We note that other, more stringent, proposed bins also carry this potential but to a lesser degree, and we feel their relatively low NMOG+NO_X standards levels sufficiently mitigate this concern, whereas the interim bins have the potential to allow a doubling of emissions or more. We request comment on this issue and the proposed approach to addressing it.

b. Fleet Average NMOG+NO_X Standards

As in the light-duty program, a key element of the Tier 3 program is a fleet average NMOG+NO_X standard that becomes more stringent in successive model years: In the case of HDVs, from 2018 to 2022. Each HDV sold by a manufacturer in each model year contributes to this fleet average based on the mg/mi NMOG+NO_X level of the bin declared for it by the manufacturer. For the interim bins, with separate NMOG and NO_X standards, the NMOG+NO_X level is the simple sum of the NMOG and NO_X standards. Manufacturers may also earn or use credits for fleet average NMOG+NO_X levels below or above the standard in any model year, as described in Section IV.B.4. We are proposing the separate Class 2b and Class 3 fleet average standards shown in Table IV–14, though a manufacturer could effectively average the two fleet classes using credits (see Section IV.B.4). We believe this split-curve approach is superior to a single HDV phase-in because it recognizes the different Class 2b/Class 3 fleet mixes among manufacturers and the different challenges in meeting mg/mi standards between Class 2b and Class 3 vehicles, while still allowing for a corporate compliance strategy based on a combined HDV fleet through the use of credits.

The proposed fleet average standards are consistent with those set for the MDV LEV III program in model years 2018 and later. Note that the LEV III program also sets standards for model years before 2018, something EPA is not requiring due to lead time considerations. However, we are proposing that manufacturers may voluntarily meet bin and fleet average standards in model years 2016 and 2017 that are consistent with the MDV LEV III standards, for the purpose of generating credits that can be used later

or traded to others. These proposed voluntary standards are shown in Table IV–14. This proposed voluntary opt-in program serves the important purpose of furthering consistency between the federal and California programs, such that manufacturers who wish to can produce a single vehicle fleet for sale nationwide, with the opportunity for reciprocal certification in affected model years. It further incentivizes pulling ahead of Tier 3 technologies, with resulting environmental benefits, by providing for early compliance credits in this nationwide fleet.

Manufacturers choosing to opt into this early compliance program could start in either model year 2016 or 2017. They would have to meet the full complement of applicable bin standards and requirements, including SFTP standards, but not the Tier 3 PM FTP and SFTP standards discussed in Sections IV.B.2.d and IV.B.3.a, or the evaporative emissions standards discussed in Section IV.C, because these requirements phase in on a later schedule. We are also requesting comment on extending the voluntary compliance opportunity to the 2015 model year.

TABLE IV–14—PROPOSED HDV FLEET AVERAGE NMOG+NO_X STANDARDS

[mg/mi]

	Voluntary		Required program				
Model Year	2016	2017	2018	2019	2020	2021	2022 and later.
Class 2b	333	310	278	253	228	203	178.
Class 3	548	508	451	400	349	298	247.

We believe that offering this voluntary opt-in would benefit the environment, the regulated industry, and vehicle purchasers, because it has potential to accomplish early emissions reductions while maintaining the goal of a cost-effective, nationwide vehicle program in every model year going forward. We request comment on all facets of this proposed approach.

Although manufacturers would be allowed to meet the fleet average NMOG+NO_X standard through whatever combination of bin-specific vehicles they choose, it is instructive to note that the fully phased in fleet average standard for model years 2022 and later would be the equivalent of a Class 2b fleet mix of 90 percent Bin 170 and 10 percent Bin 250 vehicles, and a Class 3 fleet mix of 90 percent Bin 230 and 10 percent Bin 400 vehicles. Therefore, it is appropriate to consider Bin 170 Class 2b vehicles and Bin 230 Class 3 vehicles to be representative of Tier 3-compliant HDVs in the long term.

The Tier 3 program we are proposing for HDVs would result in substantial reductions in harmful emissions from this large fleet of work trucks and vans, vehicles that are typically driven over high annual miles on every part of the nation's highway and urban roadway system. The Final Tier 3 standards levels for NMOG+NO_X and PM are on the order of 60 percent lower than the current stringent standards that took full effect three years ago.

c. Alternative NMOG+NO_X Phase-In

We believe that the program described in Sections IV.B.2.a and b above would provide manufacturers with a flexible and effective compliance path. However, as in the case of the light-duty standards discussed above, we are proposing to provide an alternative compliance path that would be available to any manufacturer who prefers a stable standard and four full years of lead time, as specified in the Clean Air Act.[271] This alternative approach would be equivalent to the primary approach that is based on NMOG+NO_X declining fleet average standards and would apply during the program phase-in over the 2016–2022 model years, with the first three of those model year standards made voluntary and set at levels to align with the California LEVIII program. We are proposing an alternative phase-in structured to require an annually increasing percent-of-sales of HDVs certified to the fully phased in 178 mg/mi (Class 2b) and 247 mg/mi (Class 3) standards, as shown in Table IV–15.

TABLE IV–15—PROPOSED PERCENT-OF-SALES ALTERNATIVE NMOG+NO_X PHASE-IN

	Voluntary			Required program			
Model Year	2016	2017	2018	2019	2020	2021	2022 and later.
Class 2b	29%	39%	54%	65%	77%	88%	100%.
Class 3	21%	32%	47%	60%	73%	87%	100%.

Under our alternative phase-in proposal, the availability of emissions averaging makes the two alternatives functionally equivalent, not just in the annual emissions reductions they achieve, but also in how manufacturers may design their mix of products to meet the phase-in standards. Although we are proposing to make the alternative approach available, we believe that the primary approach—the declining fleet average standard discussed above—is more consistent with the approach taken in California's LEV III program and in recent GHG reduction rules.

To help ensure that the percent-of-sales alternative is fully equivalent to the primary program in terms of fleet-wide emissions control and technology mix choices, we are proposing that it include some additional provisions. First, we are proposing that the Tier 3 vehicles being phased in under the percent-of-sales alternative, in addition to meeting the fully phased-in NMOG+NO_X FTP standards, must also meet all other FTP and (as described below) SFTP standards required by the primary compliance program. These include the CO and formaldehyde FTP standards in Table IV–13, the 150,000 mile (15 year) useful life requirement, exhaust emissions testing with the new

[271] For vehicles above 6,000 lbs GVWR, CAA section 202(a)(3)(C) requires EPA to provide manufacturers with a minimum of 4 years of lead time before mandatory changes to any standard applicable to HC, NO_X, CO or PM can be implemented, and 3 years of stability between changes to any such standard.

test fuel for gasoline- and ethanol-fueled vehicles discussed in Section IV.D, and the NMOG+NO_X and CO SFTP standards in Table IV–16. The specific proposed standards are those for the bins in these tables closest to the fully phased-in NMOG+NO_X standards: Bin 170 for Class 2b and Bin 230 for Class 3. (The PM and evaporative emissions standards phase in on separate schedules under both alternatives, as discussed in Sections IV.B.2.d and IV.C.)

Second, we are proposing to make an ABT program available for the percent-of-sales alternative, structured like the one proposed for the primary option. This would involve certifying the vehicles in a manufacturer's HDV fleet to the bin standards in Table IV–13, and demonstrating compliance with the fleet average standards for the primary program in each model year, including through the use of ABT credits as in the primary program. We are proposing to use the fleet average calculation method for purposes of ABT because, as explained above, we have determined that making this demonstration is equivalent to demonstrating compliance with the percent-of-sales requirement, and we see no value in complicating the program with another set of calculations.

However, we are proposing one difference between the primary and alternative options with respect to ABT provisions. Unlike in the primary option, manufacturers would not have to certify all vehicles into bins in order to take advantage of the ABT provisions under the percent-of-sales alternative. Rather they could choose to certify any ''phase-out'' vehicles (that is, those not counting toward the percent-of-sales phase-in) to the pre-Tier 3 NMHC and NO_X standards, provided these vehicles do not have family emission limits (FELs) above those standards. These non-Tier 3 vehicles would not be subject to the Tier 3 standards or other vehicle-specific elements of the Tier 3 compliance program. For the purposes of the fleet average ABT calculation, the NMOG+NO_X levels for these non-Tier 3 vehicles would be set equal to the sum of the NMOG and NO_X standards for the highest bins: 395 mg/mi for Class 2b and 630 mg/mi for Class 3, because these standards are numerically equal to the pre-Tier 3 NMHC and NO_X standards.

d. Phase-In of PM Standards

Consistent with the light-duty Tier 3 proposal discussed in Section IV.A, we are proposing to phase in the PM standards for HDVs as an increasing percentage of a manufacturer's production of chassis-certified HDVs (combined Class 2b and 3) per year. The reasons discussed in Section IV.A for this phase-in schedule in the light-duty sector also apply to the heavy-duty sector. In addition to concerns regarding the availability and required upgrades of test facilities used for both light-duty and heavy-duty vehicle testing, manufacturers have expressed uncertainty about PM emissions with new engine and emissions control technologies entering the market as a result of new GHG standards. Therefore we are proposing the same phase-in schedule as proposed for the light-duty sector in model years 2018–2019–2020–2021: 20–40–70–100 percent, respectively. This would apply to HDVs certified under either NMOG+NO_X phase-in alternative. The California Air Resources Board is phasing in the LEV III PM standards for HDVs on the same schedule, except that LEVIII would also involve a 10 percent PM phase-in in the 2017 model year, and we ask for comment on our doing so as well, in the context of the voluntary opt-in discussed in Section IV.B.2.b. The voluntary NMOG+ NO_X and PM standards may be pursued separately, with no requirement that they be met on the same vehicles.

For manufacturers choosing the declining fleet average NMOG+NO_X compliance path, the PM phase-in requirement for HDVs would be completely independent of the NMOG+NO_X phase-in. As a result, vehicles certified to any of the bin standards for NMOG and NO_X need not necessarily meet Tier 3 PM standards before the 2021 model year. Instead, the current 0.02 g/mi PM standard would apply for those vehicles not yet phased into the Tier 3 PM standards. We are proposing that manufacturers choosing the percent-of-sales phase-in alternative for NMOG+NO_X would be required to meet the PM phase-in requirements with only those vehicles certified to the Tier 3 NMOG+NO_X standard, except in the 2018 and earlier model years when the standards, including the PM standards, would be voluntary, and in the 2021 model year when the 100 percent PM phase-in requirement exceeds the 87–88 percent NMOG+NO_X phase-in requirement.

Consistent with the approach we are proposing for the light-duty sector, we would consider any vehicle under either compliance path that is not certified to Tier 3 standards for PM, NMOG, and NO_X (as well as the other, concomitant Tier 3 standards and requirements such as extended useful life), an ''Interim Tier 3'' vehicle, a term that also applies to vehicles certified in one of the interim bins, as discussed above.

Note that compliance with Tier 3 evaporative emissions requirements would follow a separate phase-in schedule as described in Section IV.C, such that a vehicle in an exhaust emissions family that the manufacturer has phased into the new useful life and test fuel requirements, may be in an evaporative emissions family that has not yet phased these in for evaporative emissions testing.

i. Optional PM Phase-In

The proposed percent-of-sales phase-in schedule for the PM standard, described above, would allow manufacturers with multiple vehicle models to determine and plan the phase-in of those models based on anticipated volumes of each vehicle model. However, manufacturers certifying only a few vehicle models may not be able to take advantage of this schedule. This is because, in order to satisfy the phase-in schedule percentages, they may have to over-comply with the required percentages earlier than would a manufacturer with many vehicle models available for the phase-in.

For instance, a manufacturer with only two models that each equally accounted for 50 percent of its sales would be required to introduce (at least) one of the models in MY 2018 to meet the phase-in requirement of 20 percent in the first year. At the 50 percent level, this model would then also meet the requirements for MY 2019 (40 percent). To meet the MY 2020 requirement of 70 percent of sales, however, the manufacturer would need to introduce the second Tier 3 vehicle that year. Thus the manufacturer would have introduced 100 percent of its Tier 3 models one year earlier compared to a manufacturer that was able to delay the final 30 percent of its fleet until MY 2021 by distributing its redesigned models over the entire phase-in period.

To provide for more equal application of this benefit among all manufacturers in the early years of the program, we are proposing an optional ''indexed'' phase-in schedule that could be used by a manufacturer to meet its phase-in requirements. A manufacturer that exceeded the phase-in requirements in any given year would be allowed to, in effect, offset some of the phase-in requirements in a later model year. The optional phase-in schedule would be acceptable if it passes a mathematical test. The mathematical test is designed to provide manufacturers a benefit from certifying to the standards at higher volumes than obligated to under the normal phase-in schedule, while ensuring that significant numbers of

vehicles are meeting the new Tier 3 requirements during each year of the optional phase-in schedule. In this approach, manufacturers would weight the earlier years by multiplying their percent phase-in by the number of years prior to MY 2022 (i.e., the second year of the 100 percent phase-in requirement).

The proposed mathematical equation for applying an optional phase-in is as follows:

$$(4 \times APP2018) + (3 \times APP2019) + (2 \times APP2020) + (1 \times APP2021) \geq 440,$$

where APP is the anticipated phase-in percentage for the referenced model year. The sum of the calculation would need to be greater than or equal to 440, which is the result when the optional phase-in equation is applied to the primary percent phase-in schedule ($4 \times 20\% + 3 \times 40\% + 2 \times 70\% + 1 \times 100\% = 440$). EPA requests comment on this proposed optional phase-in mechanism.

e. NMOG+NO_X and NMOG vs. NMHC

The reasons for setting combined NMOG+NO_X standards outlined in Section IV.A.1.a for the light-duty sector apply to HDVs certified in the non-interim Tier 3 bins as well. In fact, the combined standard is especially appropriate in the heavy-duty sector with comparable sales of diesel and gasoline-fueled vehicles, because it avoids the need to set ''lowest common denominator'' standards for NMOG (likely based on feasible gasoline vehicle technologies) and NO_X (likely based on feasible diesel vehicle technologies). These considerations also apply to the form of the SFTP standards, discussed below.

The current HDV standards that control emissions of volatile organic compounds (VOCs), adopted in a 2001 final rule,[272] are in the form of NMHC. This is consistent with HD engine standards adopted in the same final rule, but contrasts with Tier 2 LDV/LDT standards to control VOCs that are in the form of NMOG. We believe it is appropriate to transition HDVs to NMOG-based standards, and further to combined NMOG+NO_X standards, consistent with the light-duty Tier 3 proposal and light- and medium-duty LEV III program. Further, the introduction of oxygenated test fuels requires an NMOG calculation to properly control VOC emissions not properly accounted for in an NMHC calculation. This would improve consistency with the LEV III program and help to facilitate a single nationwide vehicle fleet. We do not believe that this change would add significant cost to the program as manufacturers are already capable of and experienced in making NMOG determinations at their test facilities.

3. Supplemental FTP Standards for HDVs

Unlike passenger cars and light trucks, HDVs are not currently subject to SFTP standards. SFTP standards are intended to ensure vehicles have robust emissions control over a wide range of real-world driving patterns not well-covered by the FTP drive cycle. Even though HDVs are not typically driven in the same way as passenger cars and LDTs, especially as they frequently carry or tow heavy loads, we believe some substantial portion of real world heavy-duty pickup and van driving is not well-represented on the FTP cycle.

The goal in setting the SFTP standards levels is not to force manufacturers to add expensive new control hardware for off-FTP cycle conditions, but rather to ensure a robust overall control program that precludes high off-FTP cycle emissions by having vehicle designers consider them in their choice of compliance strategies. High off-FTP cycle emissions, even if encountered relatively infrequently in real-world driving, could create a substantial inadequacy in the Tier 3 program, which aims to achieve very low overall emissions in use. The SFTP provisions would also help make the HDV program more consistent with the HD engine program, which for several years has included ''not-to-exceed'' provisions to control off-cycle emissions. Therefore, in addition to the SFTP provisions, we are further limiting enrichment on spark ignition engines in all areas of operation unless absolutely necessary.

a. SFTP NMOG+NO_X, PM and CO Standards

The proposed SFTP standards levels are provided in Table IV–16. These are consistent with those in the LEV III program.

TABLE IV–16—PROPOSED SFTP STANDARDS FOR HDVS

Vehicles in FTP bins	NMOG+NO_X (mg/mi)	PM (mg/mi)	CO (g/mi)
Class 2b with horsepower (hp)/GVWR ≤ 0.024 hp/lb [a]			
FTP Bins 200, 250, 340	550	7	22.0
FTP Bins 150, 170	350	7	12.0
Class 2b			
FTP Bins 200, 250, 340	800	10	22.0
FTP Bins 150, 170	450	10	12.0
Class 3			
FTP Bins 270, 400, 570	550	7	6.0
FTP Bins 200, 230	350	7	4.0

[a] These standards apply for vehicles optionally tested using emissions from only the highway portion of the US06 cycle.

We are proposing that Tier 3 SFTP implementation for HDVs be linked directly to the Tier 3 FTP phase-in and bins for these vehicles. That is, an HDV certified to any of the Tier 3 FTP bin standards must meet the SFTP standards for that bin as well. However, because the FTP PM standard would phase in on a separate schedule, we propose to require that SFTP PM compliance be linked to the same schedule. That is, an HDV certified to

[272] 66 FR 5002 (January 18, 2001).

the Tier 3 FTP PM standard must meet the applicable SFTP PM standard as well. This approach recognizes the complementary nature of FTP and SFTP provisions and helps to ensure that Tier 3 emissions controls are robust in real world driving. There are no proposed SFTP requirements for the interim Tier 3 bins in each class (Class 2b Bins 340 and 395 and Class 3 Bins 570 and 630), because these are essentially carry-over bins from the previous standards to aid the transition to Tier 3, and therefore are not intended to prompt vehicle redesigns to new standards. These implementation provisions are consistent with the approach taken in the LEV III program, except that California would allow FTP and SFTP phase-in requirements to be met on different vehicles, and would apply more of the Tier 3 requirements for SFTP and extended useful life to vehicles in the interim bins. We request comment on the proposed standards, and on whether or not EPA should adopt any LEV III provisions that differ from what we are proposing, such as the application of PM SFTP standards to vehicles that are in the interim bins and that also are certified to the Tier 3 p.m. FTP standards.

To help ensure a robust SFTP program that achieves good control over a wide range of real world conditions, the current Tier 2 light-duty program adopted a weighted-composite cycle, and we are proposing to retain this approach for light-duty Tier 3 testing, as discussed in Section IV.A.1.c. Under this composite cycle, NMOG+NO_X emissions are calculated from results of testing over three cycles: the US06, the FTP, and the SC03, weighting these results by 0.28, 0.35, and 0.37, respectively. We considered applying the same composite cycle for all HDV SFTP testing. However, based on data provided by industry stakeholders, we decided that the full US06 cycle, combined with the ALVW loaded test condition, would not be sufficiently representative of real-world driving for two groups of HDVs: those with low power-to-weight ratios and Class 3 vehicles.

As part of their investigation of potential LEV III SFTP standards for MDVs, California Air Resources Board staff determined that it is not uncommon for vehicles above 8,500 lbs GVWR with low power-to-weight ratio, which are largely in Class 2b, to have to work extremely hard to keep up with the accelerations required in the initial and final portions of the full US06 cycle, even proving physically unable to do so in some cases, and raising the concern that these vehicles would not be able to run a valid emissions test.[273] Although our SFTP provisions allow a test to continue when a vehicle is incapable of attaining the vehicle speed demanded by the drive trace, we believe routine occurrence of such an event for a group of vehicles would not be consistent with a well-designed test regime. We would expect results from such tests to exhibit significant test-to-test variability, making it difficult to draw reliable conclusions from them. Furthermore, in real-world driving, we would expect that most drivers who regularly demand and do not receive adequate response would modify either their driving behavior or their vehicle purchase decisions.

Based on manufacturer-supplied data, the California Air Resources Board staff established a power-to-weight (GVWR) ratio of 0.024 horsepower (hp)/lb as an approximate threshold in their efforts to characterize this issue. The vast majority of Class 2b vehicles are above this threshold today. Those below it tend to be used in applications where towing is not done extensively and the need for cargo space is more important than payload weight. Furthermore, it is possible that this group of vehicles will grow as purchasers adjust to sustained high fuel prices and when EPA's GHG standards and NHTSA's new fuel consumption standards take effect.

In consideration of this matter, we are proposing that, in SFTP testing of Class 2b vehicles at or below 0.024 hp/lb, manufacturers may at their option replace the full US06 component of the composite SFTP emissions with the test results from only the second of the three emissions sampling bags in the US06 test, generally referred to as the ''highway'' portion of the US06, subject to correspondingly lower SFTP standards levels discussed above. (These vehicles would still be driven during the test in the same way as the higher power-to-weight Class 2b vehicles (over the full US06 cycle) just using best effort (maximum power) if the vehicle cannot maintain the driving schedule.) The large majority of Class 2b vehicles, with power-to-weight above 0.024 hp/lb, would be required to measure and use emissions over the full US06 cycle in the composite SFTP. We believe that this approach would provide a robust but repeatable and reliable test for the full range of Class 2b vehicles, as the highway portion of the US06 retains broad coverage of vehicle speed/acceleration combinations measured in real-world driving.

[273] Letter from Robert H. Cross, California Air Resources Board, to Dawn Friest, EMA, dated March 2, 2011.

For Class 3 vehicles, which can weigh as much as 14,000 lbs GVWR, we are also concerned that the full US06 cycle would not provide a representative drive cycle for SFTP testing. These vehicles are much larger than the light-duty vehicles that formed the basis for development of the US06 cycle, and loading them to ALVW for the SFTP test yields a very heavy test vehicle, not likely to be safely driven in the real world in the way typified by this aggressive cycle. We believe that the LA–92 (or ''Unified'') driving cycle developed by CARB is more representative of Class 3 truck driving patterns and would produce more robust results for use in SFTP evaluations. Therefore we are proposing that the LA–92 cycle be used in place of the US06 component of the composite SFTP for Class 3 HDVs. The set of composite SFTP cycles we are proposing is fully consistent with the MDV LEV III program.

Although we consider the highway portion of the US06 cycle appropriate for low power-to-weight vehicles, we also believe that the corresponding NMOG+NO_X standards should be set at lower levels than for vehicles with emissions measured over the full US06 test. Our goal is to provide roughly equivalent stringency and avoid creating an ease-of-compliance incentive to produce vehicles in one group or the other. We have reviewed the MDV SFTP standards set by the California Air Resources Board staff and consider them appropriate in achieving this goal. These proposed standards are included in Table IV–16.

HDVs do not have SC03 emissions requirements under the current HDV standards. Manufacturers of HDVs have indicated that they expect the SC03 emissions to be consistently lower than either the US06 or the FTP emissions levels, and therefore the added SC03 testing burden may be unnecessary. We are therefore proposing that HDV manufacturers have the option to substitute the FTP emissions levels for the SC03 emissions results for purposes of compliance. However, we would retain the ability to determine the composite emissions using SC03 test results in confirmatory or in-use testing.

b. Enrichment Limitation for Spark-Ignition Engines

To prevent emissions from excessive enrichment in areas not fully encountered in the SFTP cycles, we are proposing limitations in the frequency and magnitude of enrichment episodes for spark-ignition HDVs. These limitations would be identical to those

for light-duty vehicles discussed in detail in Section IV.A.4.c.

4. HDV Emissions Averaging, Banking, and Trading

This section describes our proposed approach for emissions credits related to exhaust emissions. See Section V.C for similar provisions that apply for evaporative emissions. We are proposing to continue the current practice of allowing manufacturers to satisfy standards through the averaging of emissions, as well as through the banking of emissions credits for later use and the trading of credits with others. There are a number of facets of this proposed Tier 3 ABT program for HDVs that would be different from the current program. First, instead of separate NMHC and NO_X credits, manufacturers would earn combined NMOG+NO_X credits, consistent with the form of the standards. Second, we are proposing to allow manufacturers to accrue a deficit in their credit balance. Deficits incurred in a model year may be carried forward for up to 3 model years, but must be made up with surplus credits after that to avoid noncompliance and possible penalties. Manufacturers would have to use any new credits to offset any shortfall before those credits can be traded or banked for additional model years. We are proposing that credits must be used within 5 years after they are earned, or otherwise be forfeited. The proposed 5/3-year credit/deficit life provisions are consistent with our proposed light-duty Tier 3 approach, the California LEV III program for MDVs, and EPA programs for controlling GHG emissions from light- and heavy-duty vehicles.

Third, as part of our proposal to require chassis certification of complete diesel HDVs, we are proposing to allow diesel HDVs to participate in this ABT program without restriction. Currently, they are not allowed to earn or use ABT credits. We are not proposing to restrict or adjust credit exchange between diesel and gasoline-fueled HDVs, consistent with our shift to combined NMOG+NO_X standards that helps to ensure comparable stringency for these two engine types, and consistent also with the LEV III MDV program.

We are proposing that credits earned by a Tier 3 HDV may be used to demonstrate compliance with NMOG+NO_X standards for any other Tier 3 HDV, regardless of size and without adjustment. This effectively allows manufacturers to plan a comprehensive HDV compliance strategy for their entire Class 2b and Class 3 product offering, by balancing credits so as to demonstrate compliance with the standards for both classes. HDV manufacturers are currently certifying their vehicles to existing standards without the use of NO_X or NMHC credits, and the levels we are proposing for Tier 3 standards are not based on any assumption of credit transfers into Tier 3. As a result, we are not proposing provisions for converting pre-Tier 3 credits, should any exist at the time, into Tier 3 credits, including for use in the interim bins.

In the past we have set caps, called family emission limit (FEL) caps, on how high emissions can be for vehicles that use credits, regardless of how many credits might be available. Under our proposed bin structure, we believe that exhaust emission FEL caps are no longer relevant for Tier 3 HDVs, as every vehicle must meet whatever standards apply in the bin chosen for the vehicle by the manufacturer. (The bin standard becomes the effective FEL.) Indeed, because credits and deficits are calculated based on the difference between a manufacturer's fleet average emissions and the fleet average standards for a given model year, credits are not calculated for individual vehicle families at all. Under this proposed approach, the standards for NMOG and NO_X in the highest available bin serve the purpose of the FEL caps in previous programs.

We are proposing no averaging program for the HDV SFTP program, because we believe that the bin structure and FTP-centered NMOG+NO_X ABT program provide adequate flexibility for smooth program implementation, especially in light of our aim to have the FTP standards be the primary technology forcers. A separate ABT program for SFTP compliance would add substantial complexity with little benefit, and, by making it possible to demonstrate robust SFTP control on a vehicle that lacks commensurate FTP control, could prove at odds with the primary goal of the supplemental test for HDVs. However, we note that California's LEV III program does provide some flexibility in this matter, on a vehicle-for-vehicle basis rather than through use of emissions credits, and for this reason we request comment on the need for and considerations surrounding our granting similar flexibility for HDVs in Tier 3.

5. Feasibility of HDV Standards

The feasibility assessment, discussed in more detail in Chapter 1 of the draft RIA, recognizes that the proposed Tier 3 program is composed of several new requirements for Class 2b and 3 heavy-duty vehicles, which include primarily large gasoline and diesel pick-up trucks and vans with diverse application-specific designs. These proposed new exhaust emissions requirements include stringent NMOG+NO_X and PM standards for the FTP and the newly proposed SFTP, that would as a whole require new emissions control strategies and hardware in order to achieve the proposed standards. The type of new hardware that would be required will vary depending on the specific application and emissions challenges. Additionally, gasoline and diesel vehicles would require different emissions control strategies and hardware. The level of stringency for the proposed SFTP NMOG+NO_X standards would generally only require additional precise control of the engine parameters not necessitated in the past because of the lack of SFTP requirements. Similarly, the new PM standards on both the FTP and SFTP cycles would require more precise control of engine operation on gasoline vehicles while diesels already equipped with diesel particulate filters would require minimal changes. The new PM standards may also require that manufacturers consider the durability of their engines to the 150,000 miles useful life requirement with respect to engine wear resulting in increased oil consumption and potentially higher PM emissions.

In order to assess the technical feasibility of NMOG+NO_X national fleet average FTP standards of 178 mg/mi for Class 2b vehicles and 247 mg/mi for Class 3 vehicles, we conducted an analysis of certification data for the HDVs certified in the 2010 and 2011 MYs. This analysis provided a baseline for the current HDV fleet emissions performance, as well as the emissions performance specific to the Class 2b and 3 vehicles. The emissions performance of each heavy-duty vehicle class specific to gasoline and diesel is shown in Table IV–17 below. It is important to note that the emissions results are only the 4,000 mile test point results and do not incorporate any deterioration which manufacturers must account for when certifying to a full useful life standard. Designs limiting the deterioration of emission control hardware are critical to meeting the emission standards at the proposed useful life of the Tier 3 program. Deterioration factors to adjust the values to the proposed Tier 3 useful life standard of 150,000 miles were not available however deterioration factors to adjust to 120,000 miles useful life are discussed in the RIA Chapter 1.

The analysis also reflects the importance of the NMOG+NO_X standard approach where diesels and gasoline MDVs can balance their combined

NMOG and NO_X levels. Diesel vehicles in the analysis produce very low NMHC emissions (NMOG is not reported for diesels) but higher NO_X emissions, while gasoline vehicles have opposite performance. The combined standard allows manufacturers to determine the proper balance of the unique emissions challenges of a diesel or gasoline vehicle.

TABLE IV–17—2010/11 CERTIFICATION TEST RESULTS AT 4,000 MILES

			NMHC	NMOG	NO_X	CO	NMOG+NO_X
Gasoline	Class 2b		0.050	0.052	0.041	1.648	0.092
	Class 3		0.080	0.083	0.073	2.373	0.156
							NMHC+NO_X
Diesel	Class 2b		0.037		0.138	0.195	0.174
	Class 3		0.019		0.249	0.158	0.268
Combined Class 2b			0.043	0.026	0.089	0.922	0.133
Combined Class 3			0.050	0.041	0.161	1.265	0.212

Manufacturers typically certify their vehicles at emissions levels well below the numerical standards. This difference is referred to as ''compliance margin'' and is a result of manufacturers' efforts to address all the sources of variability that could occur during the certification or in-use testing processes and during in-use operation. These sources of variability include: Test-to-test variability, test location, build variation and manufacturing tolerances, vehicle operation (for example: Driving habits, ambient temperature, etc.), and the deleterious effects of sulfur and other oil and fuel contaminants. To meet the proposed NMOG+NO_X standard of 178 mg/mi for Class 2b and 247 mg/mi for Class 3 vehicles and establish a compliance margin for these sources of variability, manufacturers will need to reduce their emission levels considerably from the levels indicated in this data set, particularly diesel vehicles.

However, as discussed above, these emission results do not include the expected emissions deterioration which would be determined by manufacturers during development and certification testing. Therefore, manufacturers would need to further reduce emissions levels in anticipation of the unavoidable emissions deterioration that will occur during the useful life of the vehicle. Further, deterioration is a function of several factors, but it is predominantly due to emissions control hardware thermal exposure (high temperatures), which is typically a significant issue on vehicles used for performing work like Class 2b and 3 vehicles.

We also expect that the 2011 heavy-duty GHG rule will present new challenges to manufacturers' emissions performance goals as vehicles begin to use new engines designed to meet the new GHG requirements.[274] Some of these new technologies may result in emissions challenges that are specific to certain operating conditions. For example, downsized gasoline engines will likely have improved FTP exhaust emissions but have increased challenge with the high-load SFTP requirements. Diesel-fueled vehicles may need to carefully balance engine controls which reduce GHG emissions but can increase criteria emissions (NO_X).

With regard to the ability of the heavy-duty fleet to meet the proposed PM standards for the FTP and the SFTP, we based our conclusions on some testing of current HDGVs and the PM performance of the existing light-duty fleet with similar engines. Testing of two HDGVs with the highest sales volume (Ford F250 and Chevrolet Silverado 2500), albeit not aged to full useful life, confirmed that they have similar PM emissions levels as the light-duty counterparts and therefore also meet the proposed standards for both the Class 2b and Class 3 configurations. Data from light-duty gasoline vehicles with similar or common engines with their heavy-duty ''sister'' vehicle models demonstrates that these vehicles are currently meeting the proposed Tier 3 FTP PM standards at the Tier 2 useful life mileage of 120,000 miles. Heavy-duty diesel vehicles all are equipped with DPFs and have no challenges meeting the FTP or SFTP PM standards being proposed for Tier 3.

The SFTP test data from the same two heavy-duty vehicles described above indicates that gasoline vehicles can achieve the proposed standards for SFTP NMOG+NO_X and PM. Since heavy-duty vehicles are not currently required to comply with any of the SFTP requirements, manufacturers have not focused on improving the emissions performance specifically over the SFTP cycles (US06 and SC03). Therefore, although the limited testing results had a high degree of variability, several tests met the proposed PM standards for the high power-to-weight Class 2b vehicles. Consistent with light-duty, vehicles that are demonstrating high PM on the US06 would need to control enrichment and oil consumption from engine wear. Manufacturers have confirmed that they have been implementing product changes to reduce oil consumption to address both customer satisfaction issues and to reduce cost of vehicle ownership.

Given the technologies likely to be applied to meet the proposed HDV exhaust emissions standards, discussed below, we consider the lead time available before the standards take effect under all of the proposed alternatives to be sufficient. HDV manufacturers are already adopting some of the complying technologies, especially for their light-duty vehicles, and these can readily be adapted for heavy-duty applications. In addition, manufacturers have already begun developing these technologies for HDVs, including diesels, in response to California's recently adopted LEV III MDV standards which begin to take effect in the 2015 model year. Finally, as described above in Sections IV.B.2, IV.B.3, and IV.B.4, our proposed program incorporates a number of phase-in and alternative compliance provisions that would ease the transition to final standards without disrupting HD pickup and van product redesign cycles. Among these is an alternative phase-in that starts mandatory standards in model year 2019. We invite comment on our conclusions relating to the feasibility of the proposed program in the lead time we are proposing.

We are not proposing relaxed standards for in-use testing of Tier 3

[274] 76 FR 57106 (September 15, 2011).

HDVs because we do not believe additional flexibility provisions are needed to successfully implement the new emission control technologies in the proposed timeframe. However, we note that the LEV III program provides such standards for PM, and also for NMOG+NO_X in the lower-emissions MDV bins (those at or below Bin 250 and Bin 400, for Class 2b and Class 3 vehicles, respectively), and we are taking comment on the need to do so in Tier 3 as well.

We also note that the need for NMOG+NO_X in-use testing standards is further mitigated by our proposed structuring of the NMOG+NO_X standards as a declining fleet average with deficit and credit banking provisions. These provisions provide substantial flexibility to manufacturers in introducing any new NMOG or NO_X control technologies for which long-term durability is not yet proven. Manufacturers can place any vehicles for which they have in-use performance concerns in a higher bin, and this is facilitated by the fact that, unlike LEV III, our Tier 3 proposal does not target sales volumes for any individual bins. Comments supporting relaxed in-use NMOG+NO_X standards should therefore address why, in the absence of these standards, the proposed declining fleet average standard is not feasible in one or more model years.

Commenters on this issue are asked to also address the applicable model years for any such in-use testing standards. The LEV III MDV program has four different applicability periods based on a combination of specific model years listed in the regulations (up to 2020) and a set number of model years (two or five) after a test group is first certified. Comments are requested on whether it might be preferable to adopt a simpler approach in Tier 3, such as making in-use testing standards available in the model years in which standards are phasing in, that is, through model year 2021.

i. Technologies Likely To Be Applied

The technologies expected to be applied to vehicles to meet the lower proposed standards levels would address the emissions control system's ability to control emissions during cold start. Current vehicle emissions control systems depend on the time it takes for the catalyst to light-off, which is typically defined as the catalyst reaching a temperature of 250 °C. While the specific emissions challenge is somewhat different for gasoline engines than for diesel engines, achieving the necessary temperatures in the catalysts is a common challenge. In order to improve catalyst light-off, the manufacturers would likely add technologies that provide heat from combustion more readily to the catalyst or improve the catalyst efficiency at lower temperatures. These technologies could include calibration changes, thermal management, close-coupled catalysts, catalyst PGM loading, and possibly secondary air injection. In some cases, where the catalyst light-off response and efficiency are not enough to address the cold start emissions, hydrocarbon adsorbers may be applied to trap hydrocarbons until such time that the catalyst is lit-off. Note that with the exception of hydrocarbon adsorbers each of these technologies addresses both NMOG and NO_X performance. Key potential technologies are described in greater detail below.

- Engine Control Calibration Changes—These include changes to retard spark and/or adjust air/fuel mixtures such that more combustion heat is created during the cold start on gasoline engines. Diesel engines may use unique injection timing strategies or other available engine control parameters. Engine calibration changes can affect NMOG, NO_X and PM emissions.
- Thermal Management—This technology includes all design attributes meant to conduct the combustion heat into the catalyst with minimal cooling on both gasoline and diesel engines. This includes insulating the exhaust piping between the engine and the catalyst, reducing the wetted area of the exhaust path and/or reducing the thermal mass of the exhaust system. Close-coupling of catalysts (packaging the catalysts as close to the head of the engine as possible to mitigate the cooling effects of longer exhaust piping) can also be effective, but is more difficult to employ than in light-duty applications because of durability concerns with highly loaded operation and the potential increase in fuel consumption to protect the catalyst from high temperatures.
- Catalyst PGM Loading—Additional Platinum Group Metal (PGM) loading in the catalyst provides a greater number of sites to catalyze emissions and addresses NMOG, NO_X and PM emissions.
- Selective Catalytic Reduction Optimization—Diesel applications would need to continue to refine this NO_X emissions control strategy through improved hardware design and implementation in vehicle applications. Additional engineering enhancements in the control of the SCR system and related processes would also help reduce emissions levels.

6. Other HDV Provisions

a. HDV Useful Life

Currently the HDV regulatory useful life, the period of use or time during which emissions standards apply, is 120,000 miles or 11 years, whichever occurs first (40 CFR 86.1805–4). For Tier 3 vehicle criteria emissions we are proposing to extend the useful life to 150,000 miles or 15 years, whichever occurs first. This change would better reflect the improvements in vehicle durability and longevity that have occurred in the several years since the 120,000 mile useful life was established, and would maintain consistency with the LEV III MDV program and with our Tier 3 program for large LDTs, for which the same useful life period has been proposed. California's LEV III staff paper included a discussion of the feasibility of this longer useful life based on experience with it in the PZEV element of the ZEV mandate.[275]

We are proposing that the new useful life requirement apply to Tier 3 HDVs in all bins except those designated as interim bins, consistent with the purpose of the interim bins to provide for limited carry-over of pre-Tier 3 vehicle designs during the phase-in period. Although the percentage application in each year will therefore depend on each manufacturer's fleet binning strategy, the declining NMOG+NO_X fleet average standard would ensure a robust phase-in of the new useful life requirement over the 2018–2022 model years, such that it is expected to be about 50 percent in 2018, and necessarily reaches 100 percent by 2022 when the interim bins are no longer available. For those manufacturers choosing to certify to the voluntary standards, the new useful life will apply even earlier, in 2016 or 2017. For manufacturers choosing the alternative percent-of-sales NMOG+NO_X alternative, we are proposing that the new useful life requirement apply to all HDVs counted toward the phase-in requirement, resulting in a generally equivalent useful life phase-in rate to that of the primary approach. See Section IV.D.4.b for further discussion of useful life with regard to GHG standards. We are also proposing that manufacturers may optionally retain the 120,000 mile/11 year useful life for PM on interim Tier 3 vehicles that are not phased in to the Tier 3 p.m. standards.

[275] ''Preliminary Discussion Paper—Amendments to California's Low-Emission Vehicle Regulations for Criteria Pollutants—LEV III'', California Air Resources Board, February 8, 2010.

b. Heavy-Duty Alternative Fuel Vehicles

As in the proposed light-duty program, we are proposing that manufacturers demonstrate heavy-duty flex fuel vehicle (FFV) and dual-fuel vehicle compliance with both the FTP and the SFTP emissions standards when operating on both the conventional petroleum-derived fuel and the alternative fuel. Dedicated alternative fuel vehicles would demonstrate compliance with both the FTP and SFTP emission standards while operating on the alternative fuel. For all of these vehicles, this includes the requirement to meet FTP emissions standards when conducting fuel consumption and GHG emissions testing, and also to meet the FTP and highway test requirements at high altitudes (see Sections IV.B.6.e and f). Because FFVs can operate on various combinations of their conventional and alternative fuel, the emissions requirements apply to operation at any mix of the fuels achievable in the fuel tank with commercially available fuels, including for compliance at high altitudes, even though the required demonstration of compliance is limited to the conventional and alternative fuels designated for certification testing.

c. Optional Certification for Vehicles Above 14,000 lbs GVWR

The HD greenhouse gas (GHG) standards include a provision for optional certification of complete gasoline-fueled HDVs above 14,000 lbs GVWR to g/mi GHG standards on the chassis test.[276] Because that rule does not change the requirements for certification to criteria pollutant standards, manufacturers choosing this option would have to certify the vehicle for GHGs, but use installed engines certified to g/hp-hr standards for all other emissions. We believe it may provide benefits for both the environment and the manufacturers to allow consistent certification of these vehicles on a chassis test for all emissions, treating any vehicles so certified in the same way as Class 3 vehicles, including applicable standards, inclusion into fleet average calculations, test fuel, useful life, and the application of Tier 3 evaporative emissions requirements.

We request comment on the value of, and any issues concerning, our providing such an option to manufacturers of both gasoline and diesel-fueled HDVs above 14,000 lbs GVWR, including the applicability of the existing chassis test cycles for these larger trucks. Comment is also requested on whether manufacturers of such vehicles that are certified to a Final Tier 3 bin should be allowed to exclude them from the fleet average NMOG+NO_X calculation, as a means of encouraging the production of such low-emissions vehicles by not penalizing them for having emissions somewhat above the Class 3 fleet average. Finally, we also request comment on whether any such option for diesel-fueled HDVs should extend to GHG emissions as well.

d. Existing Provision To Waive HDV PM Testing

EPA's existing program includes a provision for manufacturers to waive measurement of PM emissions in non-diesel heavy-duty vehicle emissions testing. We are proposing to eliminate this provision. We believe that the PM standards we are proposing for these vehicles are of sufficient stringency that routine waiver of testing would not be appropriate. The California Air Resources Board LEV III program reflects this view. We do not expect this change to be onerous for manufacturers, as the number of heavy-duty vehicle families is not large. Even so, we request comment on alternative approaches, such as that being proposed for light-duty vehicles, involving measuring PM on a subset of families each year. We request comment on any other potential situations in which waiver of PM measurement may be appropriate. Note that we are proposing to waive the PM emissions measurement requirement for small manufacturers, for reasons explained in Section IV.E.

e. Meeting HDV Standards in Fuel Consumption and GHG Emissions Testing

As with the proposed light-duty Tier 3 program, we are proposing that HDVs must meet the FTP bin standards when tested over both the city and highway test cycles. We do not believe this adds a very significant test burden as vehicle emissions are already required to be measured when these tests are run for GHG and fuel consumption determinations. Nor do we believe that this proposed requirement is design forcing. Rather, we are proposing this requirement to ensure that test vehicle calibrations are not set by manufacturers to minimize fuel consumption and GHG emissions, at the expense of high criteria pollutant emissions. Considering the additional work involved in measuring PM emissions and the reduced likelihood of high PM emissions on the highway test, we are not proposing that PM emissions testing be included in this requirement, but we ask for comment on whether we should instead include them, but waive the requirement to measure them in manufacturers' certification testing, to ensure that any unforeseen PM control technology challenges in highway driving conditions are addressed in the future.

f. HDV Altitude Requirements

As in the past, we intend that HDV Tier 3 standards result in emissions controls that are effective over a full range of operating altitudes. We do not anticipate that the proposed FTP bin standards would require the use of special hardware to achieve compliance at altitude. We also do not believe that adjustment to the FTP standards is appropriate for HDV testing at altitude, as we expect that manufacturers would be able to meet these standards with adequate compliance margin to cover this test condition. As in the proposed light-duty program, and for the same reasons, we are not proposing to require that HDVs comply with SFTP standards at altitude.

C. Evaporative Emissions Standards and Onboard Diagnostic System Requirements

Gasoline vapor emissions from vehicle fuel systems, which are a mixture of hydrocarbon compounds, occur when a vehicle is in operation, when it is parked, and when it is being refueled. These evaporative emissions from gasoline-powered vehicles which occur on a daily basis are primarily functions of temperature, fuel vapor pressure, and activity. EPA first instituted evaporative emissions standards in the early 1970s to address hydrocarbon emissions when vehicles are parked after being driven. These are commonly referred to as hot soak and diurnal emissions. Over the subsequent years the test procedures have been modified and improved, the standards have been revised to be more stringent, and we have addressed emissions which arose from new fuel system designs by establishing new requirements such as running loss emission standards and test procedure provisions to address resting losses (e.g., permeation). Onboard refueling vapor recovery (ORVR) requirements for control of refueling emissions first began to phase-in for light-duty vehicles (LDVs) and light-duty trucks (LDTs) in the 1998 MY. These were later expanded to cover medium-duty passenger vehicles (MDPVs) and some heavy-duty gasoline vehicles (HDGVs). Even though evaporative and refueling emission control systems have been in place for

[276] 76 FR 57106 (September 15, 2011).

most of these vehicles for many years, evaporative emissions still contribute 30–40 percent of the on-road mobile source hydrocarbon inventory. These fuel vapor emissions are ozone and PM precursors, and also contain air toxics such as benzene. Even though there are mature evaporative emission control programs in place, further hydrocarbon emission reductions are needed and can be achieved from highway motor vehicles. Vehicles demonstrating near zero fuel vapor emissions have been certified by CARB and a limited number are in-use in California and other states. Furthermore, test programs conducted by the Coordinating Research Council and EPA show that attention is needed to insure better in-use performance of current evaporative control systems. Cost effective hydrocarbon emission reductions can be achieved through new vehicle standards and improved focus on in-use performance.

This section discusses the proposed vehicle-related evaporative emission standards and related provisions for LDVs, LDTs, MDPVs, and HDGVs. As discussed below, we are proposing more stringent standards that would apply for the 2- and 3-day evaporative emissions tests, a new canister bleed test and emission standard, a new certification test fuel specification,[277] and a new fuel/evaporative system leak test procedure and emission standard. We are also proposing refueling emission controls for a portion of HDGVs over 10,000 lbs gross vehicle weight rating (GVWR). This section also describes proposed phase-in flexibilities, credit and allowance programs, and seeks comment on several other issues related to evaporative emissions control.

The proposed evaporative emissions program has six basic elements: (1) The Tier 3 evaporative emission phase-in program (MY 2018–2022+), (2) the early allowance/credit program (MY 2015–2016), (3) the transitional program (MY 2017), (4) requirements for HDGVs including ORVR, (5) a leak emission standard and test procedures, and (6) other miscellaneous proposed changes and areas for comment.

In this proposed rule, the vehicle classifications, LDVs, LDTs, MDPVs, and HDGVs, would remain unchanged from Tier 2. For purposes of this discussion of the proposed Tier 3 evaporative emissions program, the vehicle standards can be further placed in four categories: (1) ''Zero evaporative emission'' PZEV vehicles certified by CARB as part of the ZEV program, (2) vehicles certified by CARB to meet LEV III evaporative emission program requirements on CARB certification fuel (7 RVP E10), (3) vehicles meeting the proposed Tier 3 evaporative emissions program requirements using the proposed certification test fuel (9 RVP E15), and (4) transitional vehicles meeting current EPA evaporative requirements on Tier 2 certification fuel (9 RVP E0).[278] [279] For ease of reference these four categories may be referred to as PZEV evap, LEV III evap, Tier 3 evap, and Tier 2 evap in this section.[280]

1. Tier 3 Evaporative Emission Standards

a. Proposed Standards

This proposal for evaporative emissions builds on previous EPA requirements as well as CARB's recent LEV III rule which starts phasing in with the 2018 MY. This proposal facilitates a national program for vehicle evaporative emissions control. We believe the proposed program is appropriate since it would require new evaporative emissions control technology in new vehicles while also achieving improved in-use system performance.

This section describes proposed requirements for LDVs, LDTs, MDPVs, and HDGVs. The proposal includes more stringent emission standards for hot soak plus diurnal emissions (2- and 3-day tests), plus a new canister bleed standard and testing requirement for measuring emissions from the fuel tank and the evaporative canister. The proposal also introduces a limited corporate averaging program for demonstrating compliance with the hot soak plus diurnal standards. We are proposing a phase-in of the Tier 3 evaporative emission standards that would begin with the 2017 MY, with incentives for manufacturers to introduce Tier 3 compliant vehicles earlier or in greater numbers than required. The proposal includes revised provisions for demonstrating compliance with the evaporative emission standards at high altitude. See Section IV.C.3 for additional provisions for the HDGV category.

i. Hot Soak Plus Diurnal Standards

Previous hot soak and diurnal emission controls have dramatically reduced vehicle evaporative emissions over the past thirty plus years. However, some emissions remain and control technology is available to capture these emissions in a cost effective manner. Toward that end, EPA is proposing more stringent hot soak plus diurnal evaporative emission standards for the Tier 3 program. The standards apply to both the 2-day and 3-day evaporative emission test requirements.

The standards are designed to bring into the broader motor vehicle fleet the ''zero evap'' technology used by the manufacturers in their partial zero emission vehicles (PZEVs). Manufacturers developed this ''zero evap'' technology as part of their response to meeting the requirements of the CARB Zero Emission Vehicle (ZEV) program. This program, which is in effect in 11 other states, allows manufacturers to meet their ZEV mandate percentages (totally or in-part) by the use of vehicles which among other characteristics have very low fuel vapor emissions.

The standard levels presented in Table IV–18 are designed primarily to accommodate what is often referred to as new vehicle background hydrocarbon emissions. These emissions arise from the off-gassing of volatile hydrocarbons from plastics, rubbers, and other polymers found in new vehicles (e.g., new tires, interiors, seats, fuel system components, paints, and adhesives). In the field these emissions decrease over time as the vehicle ages, but this cannot necessarily be replicated in the time that manufacturers normally allocate for vehicle certification. In the past manufacturers have employed techniques such as vehicle baking (discussed below) to accelerate the rate of this off-gassing, and until recently it has not been a major consideration for certification.

In the past EPA has set relatively uniform (but not identical) evaporative emission standards for LDVs and LDTs and somewhat higher values for HDGVs. The proposed hot soak plus diurnal emission standards presented in Table IV–18 are somewhat higher as vehicles get larger in weight and physical size. This is because in general the vehicles have higher levels of non-fuel background emissions as they get larger. As mentioned above, the standards, which are approximately a 50 percent reduction from the existing hot soak plus diurnal standards, are intended

[277] For flexible fuel vehicles (FFVs) certification fuel for evaporative and refueling emissions testing would remain a 9 RVP gasoline splash blended with ethanol to yield a blend containing 15 percent ethanol.

[278] We adopted the most recent vehicle evaporative emission standards for LDVs, LDTs, and MDPVs in 2007 (72 FR 8428, February 26, 2007). The most recent standards for HDGVs were adopted in 2000 (66 FR 5165, January 18, 2001).

[279] See Section IV.D.1 for a discussion of the proposed certification fuel changes, including discussion of options for and implications of the certification test fuel having 10 percent ethanol.

[280] ''PZEV evap'' as discussed here refers only to the evaporative emission and useful life requirements of the PZEV program, not the exhaust emission requirements.

primarily to accommodate non-fuel background emissions. Thus, the technology focus for the proposed Tier 3 evaporative emission standards is for vehicles to have essentially zero fuel vapor emissions.

As described in more detail in Section IV.C.2 below, EPA is proposing a program that would allow manufacturers to demonstrate compliance with the proposed hot soak plus diurnal evaporative emission standards using averaging concepts. Under the proposal, manufacturers may comply by averaging within each of the four vehicle categories but for the reasons discussed below, may not rely on averaging across categories. The technical approaches to meeting the proposed standards are discussed in Section IV.C.2. EPA is not proposing any changes to the existing light-duty running loss or refueling emission standards with the Tier 3 proposal, with the exception of the certification test fuel requirement.

TABLE IV–18—PROPOSED EVAPORATIVE EMISSION STANDARDS (G/TEST) [a b c]

Vehicle category	Highest hot soak + diurnal level (over both 2-day and 3-day diurnal tests)
LDV, LDT1	0.300
LDT2	0.400
LDT3, LDT4, MDPV	0.500
HDGVs	0.600

[a] The standards are in grams of hydrocarbons as measured by flame ionization detector during the diurnal and hot soak emission tests in the enclosure known as the sealed housing for evaporative determination (SHED).

[b] Note that the proposed standards are the same for both tests; current standards are slightly different for the 2- and 3-day tests.

[c] Vehicle categories are the same as in EPA's Tier 2 final rule; see 65 FR 6698, February 10, 2000.

ii. Canister Bleed Emission Standard

In addition to more stringent hot soak plus diurnal standards, EPA is proposing a new canister bleed emission test and standard as part of the Tier 3 program. The proposed bleed test procedure is described in Section IV.C.4.a., below. The purpose of the new test and standard is to ensure that near-zero fuel vapor emissions are being emitted by vehicles from the fuel tank through the evaporative emission canister. Under this proposal, manufacturers would be required to measure diurnal emissions over the 2-day diurnal test procedure from just the fuel tank and the evaporative emission canister and comply with a 0.020 g/test standard for all LDVs, LDTs, and MDPVs and 0.030 g/test for HDGVs. The feasibility of this standard is discussed in Section IV.C.2.g.ii below. EPA is proposing not to apply the averaging program to this new bleed test standard as compliance is relatively straightforward and low in cost. Therefore, each evaporative/refueling emission family certified by manufacturers would need to demonstrate compliance with their respective standard. As discussed below, the canister bleed standard would not apply at high altitude. The canister bleed test and standard drives canister design elements such as total gasoline working capacity, internal architecture, and the type of carbon used. Since the performance of the canister is also evaluated in the hot soak plus diurnal evaporative emissions sealed housing for evaporative determination (SHED) test we are proposing that the canister bleed emission standard not be included in the In-Use Verification Program but it must be met in use. We would not expect to have canister bleed specific family criteria for certification but the test would have to be completed and the standard met for each evaporative/refueling family including potentially twice if there were two canisters used. A deterioration factor would not be required, but as mentioned above, the standard would have to be met in-use and could be evaluated in EPA confirmatory testing.

iii. Early and Transitional Hot Soak Plus Diurnal Standard

As part of its LEV III program, CARB has included an alternative set of evaporative emission standards, referred to as Option 1 standards. These are shown in Table IV–19.

TABLE IV–19—CARB OPTION 1 EVAPORATIVE EMISSION STANDARDS

Vehicle category	Highest hot soak + diurnal level (over both 2- and 3-day diurnal tests) (g/test)		Running Loss (g/mile)
	Vehicle SHED	Rig SHED	
Passenger Car	0.350	0.0	0.05
LDT ≤ 6,000 lbs GVWR	0.500	0.0	0.05
All other vehicles > 6,000 lbs GVWR	0.750	0.0	0.05

The Option 1 standards include evaporative emission standards (hot soak plus diurnal) that are slightly higher numerically than our proposed standards. Vehicles certified under this option may not use averaging in the CARB LEV III program because they basically represent the same evaporative emission standards as exist for PZEVs under CARBs ZEV program wherein averaging is not permitted. Option 1 also includes an additional test of the vehicle fuel system (rig test) that from an engineering perspective is practically more difficult to conduct than the bleed test discussed above and is intended to force manufacturers to demonstrate at certification that their stand alone (not in chassis) fuel/vapor control system designs have no (≤54 mg) fuel vapor emissions. EPA is not proposing that Option 1 be part of the long term Tier 3 evaporative emission program. While we see the merit of the rig test as an engineering design and development tool for the manufacturers, by its very nature, the rig SHED standard is not implementable as an enforceable standard. We believe that the hot soak plus diurnal SHED test and the canister bleed test will accomplish the same objective of keeping fuel vapor emissions to a minimum.

EPA believes most manufacturers will prefer to certify to the averaging based standards proposed by EPA (similar in

stringency and program construct to CARB Option 2). However, because some manufacturers may have vehicle models meeting the CARB Option 1 standards and emission requirements now or in the near future, EPA is proposing that compliance with the CARB Option 1 standards would be an acceptable interim alternative to compliance with the proposed Tier 3 evaporative emission standards if the model is certified by CARB before the 2017 MY. EPA proposes that these vehicles could then be certified using carryover provisions through the 2019 MY.[281] As noted in the following sections, vehicles certified under this provision would count toward the phase-in percentage requirements and could earn allowances as discussed below, but the vehicles would not be eligible to earn or use credits for the evaporative emissions averaging program. Carryover vehicles would have to meet EPA leak emission standard to be counted toward the sales percentage requirements for 2018 and later model years.

b. Useful Life

Trends indicate that vehicle lifetimes are increasing. It is important that emission control systems be designed to meet requirements while vehicles are in use. As discussed in Section IV.A and IV.B of this proposal, along with the new emission standards, we are proposing a longer useful life of 150,000 miles/15 years, whichever comes first, for LDTs up to 6,000 lbs GVWR but over 3,750 lbs loaded vehicle weight (LVW) (LDT2s), all LDTs over 6,000 lbs GVWR (LDT3/4), MDPVs, and HDGVs between 8,501 and 14,000 lbs GVWR. The proposed longer useful life would also apply to certifications to the Tier 3 evaporative emission requirements. For an evaporative/refueling family certified to 150,000 miles/15 year useful life for evaporative emissions this useful life would also apply to the refueling, leak, and high altitude standards, where applicable when a family certifies to the Tier 3 evaporative emission requirements. All of these standards impact the fuel and vapor control systems and it is technologically consistent to require the same useful life for these standards because they all rely on the mechanical integrity, durability, and operational performance of the same components in the evaporative emissions control system.

Due to limitations in the CAA, for LDVs and for LDTs up to 6,000 lbs GVWR and at or below 3,750 lbs LVW (LDT1s), we are keeping the current useful life of 120,000 miles/10 years unless, as described in Section IV.A, a manufacturer elects alternative exhaust emission requirements that are associated with 150,000 mile/15 year useful life for these vehicles. For manufacturers that select those optional standards, the useful life of 150,000 miles/15 years would apply for all Tier3 evaporative emission standards including the hot soak plus diurnal emission standards, the refueling emission standard, and the leak standard because of the design and operating relationships between the engine, the fuel system, the evaporative control system and their various components.

During the early and transitional program periods and until the final year of the allowed phase-in period for the Tier 3 evaporative emission program (MY 2015–2022) the differences between the proposed exhaust and evaporative emission phase-in programs presents the possibility that in some cases a manufacturer could certify a model to the Tier 3 exhaust requirements but not necessarily to the Tier 3 evaporative emission requirements.[282] In those situations, we are proposing that a family could have a 150,000 miles/15 years useful life for exhaust emissions but maintain the current useful life for all of the evaporative and refueling emission standards. We also propose that during the phase-in period, if a family is certified to the Tier 3 evaporative emission requirements but not yet certified for Tier 3 exhaust emission requirements, then the useful life could be 150,000 miles/15 years for evaporative and refueling emissions standards but the current useful life for exhaust emissions, However, by the 2022 MY EPA proposes that the useful life for all of these requirements would be 150,000 miles/15 years for LDT2/3/4s, MDPVs, and HDGVs since by that model year all vehicles must be certified using Tier 3 certification fuel and test procedures and meet Tier 3 evaporative emission standards.[283]

OBD regulations call for the systems to operate effectively over the useful life of the vehicle. We are not proposing to change that requirement, but rather to clarify that during the early and transition years of the phase-in (MY 2015–2022), all of the OBD monitoring requirements have the same useful life as that for the exhaust emission standard except for the evaporative system leak monitoring requirement which has the same as that required for the evaporative and refueling emission standards control systems.

2. Evaporative Emissions Program Structure and Implementation Flexibilities

a. Percentage Phase-In Requirements

The proposed Tier 3 evaporative emission standards would be phased in over a period of six model years (MYs), including a transitional year in 2017. For MY 2017, except as discussed below, the requirement would apply to 40 percent of a manufacturer's combined sales of LDVs, LDT1s, and LDT2s. To be consistent with the start date for new exhaust standards affecting these vehicles, the phase-in requirements would not include vehicles over 6,000 lbs GVWR until the 2018 MY. For the 2018–2019 MYs, the requirement would apply to 60 percent of a manufacturer's sales of all LDVs, LDTs, MDPVs, and HDGVs. This would increase to 80 percent for MYs 2020 and 2021 and by MY 2022 it would apply to 100 percent of sales in these four categories. Beginning in MY 2018 any vehicle included in the percentage projection, except vehicles that had earned allowances would have to meet the leak emission standard.

Our proposal for MY 2017 has two options and we are seeking comment on a third option. The first, which we are calling the ''percentage'' option, would require that 40 percent of a manufacturer' s LDVs, LDT1s, and LDT2s sold outside of California and the states that have adopted the CARB ZEV or LEV III programs must meet the Tier 3 evaporative emission requirements on average. The second which we are calling the ''PZEV zero evap only'' option, would require a manufacturer to sell all of the LDVs, LDT1s, and LDT2s certified with CARB as meeting the PZEV evaporative emission requirements (zero evap) in MY 2017 throughout all of the U.S. and not to offer for sale any non-PZEV zero evap version of those vehicles in any state whose vehicles are covered by the Tier 3 evaporative emission standards. Thus, this would apply to sales in any state except for California and states that

[281] EPA is proposing to incorporate by reference the CARB Option 1 test procedures and emission standards for this interim period.

[282] By the 2020 MY, all Tier 3 evaporative system emissions certifications must use Tier 3 certification test fuel and test procedures. This affects evaporative (hot soak plus diurnal), canister bleed, refueling, and leak emission standards certification.

[283] The only exception here would be for vehicles not meeting Tier 3 evaporative emission requirements in the 2022 MY as a result of the use of previously earned allowances and small businesses which have until the 2022 MY to meet the proposed Tier 3 evaporative emission requirements.

have adopted the CARB ZEV or LEV III programs under section 177 of the Clean Air Act. Under this second option, no tracking of sales or end of year compliance calculation would be required. Some manufacturers may find this option attractive, as they have more limited product offerings and find tracking of production and sales more difficult.

The basic goal of the 2017 MY program is to provide evaporative emission reductions benefits in the other states which are similar to those expected in California and the states which adopted LEV III under section 177 of the Clean Air Act. Due to model phase-out and phase-in issues related to current and future products, some manufacturers have indicated that increasing production of Tier 3 evaporative emission compliant vehicles for the 2017 MY to meet the 40 percent value discussed above could be difficult and costly. To address this issue, we are asking for comment on a third option: decreasing this value from 40 percent to 20 percent but requiring that these same vehicles also meet the leak emission standard in the 2017 MY. This approach has the potential to address the transition issue and EPA believes that the leak standard will provide evaporative emission reduction benefits equal to or greater than the Tier 3 evaporative emission standards. Thus, under this approach, the manufacturers' product transition concerns could be addressed and the overall evaporative emission reductions would still be achieved for 2017 MY vehicles. As discussed below, beginning in the 2018 MY, a Tier 3 compliant vehicle must also meet the leak emission standard. This option would be effective only in the 2017 MY. EPA asks for comment on whether this option should require the leak emission standard to apply to the same 20 percent of vehicles that are complying with the Tier 3 evaporative emission requirements, or whether this option should allow manufacturers the flexibility to meet some or all of the 20 percent leak emission standard requirement with vehicles not yet compliant with the Tier 3 evaporative requirements.

At the time of certification, manufacturers would identify which families would be included in their Tier 3 evaporative emission percentage calculations (this could be families above or below the individual Tier 3 evaporative emission standards for the given class of vehicles as well as vehicles meeting CARB's Option 1 standards) and could also include earned allowances as discussed below. They would use projected sales information for these families plus allowances as desired and available, to show how they expect to meet the phase-in percentages for the model year of interest. At the end of the model year they would be expected to show that the percentages were met and if not they would either use additional allowances or bring more vehicle families into the calculation.

Requiring a showing at the time of certification based on projected sales requires due diligence by the manufacturers and EPA, but the Tier 3 evaporative emissions program allows for fleet averaging, so a validation or ''truing up'' of these sales projections is necessary for determining compliance with the requirements of the standard. This is discussed in Sections IV.C.2.c.and d. As discussed further below, validated sales information would also be used for earning early allowances and to show compliance with the alternative phase-in schedule approach.

For these purposes, vehicles included in the phase-in percentage could be: (1) Families which certified to CARB LEV III requirements in MYs 2015 and 2016 (CARB Option 1), (2) families certified to meet Tier 3 evaporative emission requirements, and (3) vehicles from the early allowance program. However, beginning in the 2017 MY, any new evaporative/refueling emission family certifications would have to meet the proposed EPA Tier 3 certification requirements for both test procedure and certification test fuel for the evaporative and refueling emission standards. The leak emission standard would apply in the 2018 MY. Furthermore, assuming other regulatory provisions related to carryover of emissions data are met, 2015–2016 MY CARB evaporative emissions certifications could be carried over until the end of the 2019 MY and included as compliant vehicles within the program if they met the leak emission standard.

The phase-in percentages for MYs 2017 through 2022 reflect a percentage phase-in concept applied successfully by EPA in previous rules involving evaporative and refueling emissions control. The proposed phase-in provides an appropriate balance between the needed emission reductions and time for the manufacturers to make an orderly transition to the new technology on such a broad scale. The higher initial percentage here is appropriate because the expected evaporative emission control technology is already being used to varying degrees by 16 manufacturers on over 50 vehicle models today and is projected to gain even deeper penetration by 2017 due to the partial zero emission vehicles (PZEV) option within the CARB ZEV program.

As a flexibility, we are proposing to allow manufacturers to demonstrate compliance with the phase-in percentage requirements of the evaporative emissions program by using a manufacturer-determined alternative phase-in percentage scheme. Under this approach, before the 2018 MY, manufacturers would have to present a plan to EPA which demonstrates that the sum of the product of a weighting factor and the percentages of their U.S. vehicle sales for each model year from 2018 through 2022 is greater than or equal to 1040. The 1040 value is equal to the sum of the product of the weighting factors and the percentage requirements for MYs 2018 through 2022, calculated in the following manner: [(5)(2018MY %)+4(2019MY %)+3(2020MY %)+2(2021MY %)+(1)(2022MY %)]. This would allow manufacturers to use a phase-in more consistent with product plans which may call for a lower percentage in the early years or to benefit from producing and selling more than the minimum percentage of compliant vehicles early. This flexibility could also be helpful in the event that a manufacturer elects to put some vehicles on a different phase-in schedule for meeting Tier 3 exhaust and evaporative emission standards. As explained further below, any allowances earned could be counted toward compliance with the 1040 value. Within this proposed flexibility EPA asks for comment in three areas. First, we seek comment on the need for and value of this alternative phase-in percentage flexibility option. Second, we did not include the 2017 MY in this flexibility because we believe that the PZEV zero evap nationwide option, the use of any earned allowances, and the ability to have a deficit in a given year are sufficient. However, we ask for comment on including the 2017 MY ''percentage'' option in this flexibility (both the 40 and 20 percent approaches discussed above). If after comment the 40 percent option from the 2017 MY is included in the final rule, the sum of the percentages would include an additional 240= (6)(40) for a total; of 1280; the equation above would add a term of (6)(2017MY %). Similarly, we ask for comment on whether the 20 percent option from the 2017 MY should be included in the alternative phase-in approach. If it is included in the final rule, the sum of the percentages would include an additional 120= (6)(20) for a total; of 1160; the equation above would add a term of (6)(2017MY %).

b. Early Allowance Program

We are proposing incentives for early introduction of vehicles compliant with the Tier 3 evaporative emission regulations. Manufacturers could take advantage of these incentives prior to MY 2018 by selling vehicles that meet the Tier 3 evaporative emission regulations earlier than required or in greater numbers than required.

As described below, manufacturers could earn ''allowances'' for selling any vehicle certified to the proposed Tier 3 evaporative emission regulations earlier than required. The vehicles could be LDVs, LDTs, MDPVs, or HDGVs. Specifically these include the following: (1) For MYs 2015 and 2016, any LDVs and LDTs meeting the Tier 3 evaporative emission regulations and sold outside of California and the states that have adopted CARB's ZEV or LEV III programs, (2) for MYs 2015–2017, any MDPV or HDGV meeting the Tier 3 evaporative emission regulations early and sold in any state, (3) for MY 2017, any LDT3/4 meeting the Tier 3 evaporative emission regulations and sold outside of California and the states that have adopted CARB's LEV III or ZEV programs, and (4) for MYs 2015–2017, any HDGV between 10,001 and 14,000 lbs GVWR meeting the refueling emissions regulations and sold outside of California and the states that have adopted CARB's LEV III or ZEV programs.

In order to demonstrate compliance with the proposed Tier 3 evaporative emission regulations, the vehicles could be certified to either the proposed Tier 3 evaporative emission standards or CARB's PZEV zero evaporative emission and useful life requirements. Vehicles generating allowances would have to meet the proposed evaporative emission standards (CARB Option 1 or EPA Tier 3), the high altitude evaporative emission standard, the canister bleed standard as well as the refueling emission standards. Manufacturers would earn one allowance for each qualifying vehicle sold. Manufacturers can use these allowances in MY 2017 through 2022 to help demonstrate compliance with the phase-in percentage requirements and fleet average evaporative emission standards for those years.

Allowances would be used in the compliance determination in the following manner. Vehicles qualifying for allowances could be used in the fleet average evaporative emission standard calculation for any year during the phase-in. This would apply to the primary phase-in and alternative phase-in programs. Allowance vehicles would be entered into the compliance calculation with an emission value equivalent to the evaporative emission standard for their vehicle category from Table IV–18 even if it was certified to CARB Option 1 standards (Table IV–19). For the percent phase-in requirement in either the primary or alternative phase-in schemes, allowance vehicles would count for one vehicle for each allowance used within their vehicle category. For the primary scheme this would be counted as one vehicle, but for the alternative phase-in option the value would be multiplied by the weighting factor (5 for 2018, 4 for 2019, 3 for 2020, etc). Within the alternative phase-in scheme the manufacturer would be limited to using these early allowances for no more than 10 percentage points of the phase-in requirements in any given model year (e.g., MYs 2018–2022). EPA believes this limitation is appropriate. Early introduction of ''zero evap'' technology should be encouraged, but not necessarily at the expense of its widespread use across the various vehicle categories as the phase-in progresses. The proposed allowances are designed primarily to facilitate manufacturer transition during the program phase-in. As such, we propose that they could not be traded between manufacturers and unused allowances would expire after the 2022 MY.

An example here may be helpful in demonstrating how the proposed concept would work. Take a hypothetical manufacturer who earned 10,000 allowances in 2015 and 2016 and sells 100,000 units per year. In 2018, the manufacturer would have a phase-in requirement of 60 percent or 60,000 vehicles. For the primary phase-in option the manufacturer could use part or all of its allowances in 2018. For the alternative phase-in scheme the proposed regulations would limit the use of allowances to 10 percentage points at the 60 percent. Without a multiplier this would require the use of all 10,000 allowances in 2018, but with the proposed multiplier only 2,000 allowances would be needed to reach the 10 percentage point maximum. Using a similar calculus, the manufacturer could use another 10 percentage points in 2019, but it would require 2,500 allowances since the multiplier is 4. The number of allowances to reach 10 percentage points would increase each year as the multiplier decreased.

For the MY 2017, manufacturers choosing EPA's proposed ''percentage'' option (see Section IV.C.2.a) could earn allowances for sales of LDT3s, LDT4s, MDPVs, and HDGVs that meet the proposed Tier 3 evaporative emission standards and other related requirements assuming their LDV, LDT1/2 sales meet the 40 percent requirement. Similarly, manufacturers choosing EPA's proposed ''PZEV zero evap only'' option could earn allowances in MY 2017 for LDT3/4s, MDPVs, and HDGVs that meet the CARB Option 1 evaporative emission standards and related requirements. For both the ''percentage'' and ''PZEV zero evap only'' options for the 2017 model year, to avoid double counting, the allowances would be earned only for those vehicles sold outside of California and the states that have adopted CARB's LEV III/ZEV program requirements. Vehicles earning allowances could either be vehicles certified to the Tier 3 evaporative emission standards or vehicles certified using carryover data from the CARB PZEV zero evaporative emission requirements from the 2015 or 2016 MYs. Since credits and allowances serve primarily the same purpose and allowing for splits of allowances/credits greatly complicates program implementation, we are proposing that manufacturers could only earn allowances in MYs 2015–2017 for any qualifying LDT3s, LDT4s, MDPVs, and HDGVs since these vehicles are not covered by the proposed Tier 3 standards until the 2018 MY. EPA asks for comment on whether this opportunity to earn allowances coupled with the aforementioned restriction on their use is the appropriate balance.

c. Evaporative Emissions ABT

Throughout EPA's programs for mobile source emission controls, we have often included emission averaging programs for exhaust emissions. An emission averaging program is an important factor we take into consideration in setting emission standards under the Clean Air Act. An emission averaging program can reduce the cost and improve the technological feasibility of achieving standards, helping to ensure the standards achieve the greatest achievable reductions, considering cost and other relevant factors, in a time frame that is earlier than might otherwise be possible. Manufacturers gain flexibility in product planning and the opportunity for a more cost-effective introduction of product lines meeting a new standard. Emission averaging programs also create an incentive for the early introduction of new technology, which allows certain emission families to act as leaders for new technology. This can help provide valuable information to manufacturers on the technology before they apply the technology throughout their product line.

These programs generally involve averaging and banking, and sometimes trading (ABT). Averaging allows a manufacturer to certify one or more families at emission levels above the applicable emission standards as long as the increased emissions are offset by one or more families certified below the applicable standards. These are referred to as family emission limits (FELs). The over-complying families generate credits that are used by the under-complying families. Compliance is determined on a total mass emissions basis to account for differences in production volume, and on other factors as necessary. The average of all emissions for a particular manufacturer's production within category must be at or below the level of the applicable emission standards. Banking allows a manufacturer to generate emission credits and bank them for future use in its own averaging program in later years. Trading allows a manufacturer to sell credits or obtain credits from another manufacturer.

EPA is proposing an emissions ABT program for the Tier 3 hot soak plus diurnal evaporative emissions standards. This would be the EPA's first averaging program for evaporative emissions from light-duty or heavy-duty vehicles. It would not apply to the high altitude standard, the canister bleed standard or the leak emission standard because it is the low altitude ''zero evap'' hot soak plus diurnal standard which will drive the fundamental technology used to comply with all of these requirements. EPA is proposing to include trading of emission credits between manufacturers, but in past similar programs there have been very few trades. Incorporating trading within the program adds a significant degree of complexity, so we are seeking comment on the need for and value of including trading.

The evaporative emissions ABT program would start with the 2017 MY for the percentage option. The programs would continue for the 2018 MY and beyond and would not sunset, as does the allowance program. Vehicles generating averaging/banking credits in the 2017 MY or later would not be permitted to also generate allowances as this would be double counting.

A key element of an averaging program is the identification of the averaging sets. This sets the criteria for which emission families can be averaged for purposes of compliance as well as credit and deficit determinations. We are proposing four averaging sets and the applicable emission standard for each of the averaging sets as shown in Table IV–18. Except as noted in section d below, credit exchanges between averaging sets would not be permitted. Participation in averaging is voluntary since a manufacturer could elect to certify each family within the averaging set to its individual limit as if there was no averaging program.

An evaporative emission ABT includes two very distinct steps. The first is the determination of the credit/deficit status of each family relative to its applicable standard from Table IV–18. The second is the role of ABT in the overall compliance demonstration which will be discussed in Section IV.C.2.d which follows.

A manufacturer choosing to participate in the evaporative emissions ABT program would certify each emission family to an FEL. The FEL selected by the manufacturer becomes the emission standard for that emission family. As noted below, emission credits (or deficits) are based on the difference between the emission standard that applies (by vehicle category) and the FEL. The vehicles would have to meet the FEL for all emission testing.

We are proposing that the FELs selected by the manufacturer would have to be selected at 0.025 g/test increments above or below the applicable Tier 3 evaporative emission standards for each vehicle category. FELs could not be set any higher than 0.500 g/test for LDVs, 0.650 g/test for LDT1s and LDT2s, 0.900 g/test for LDT3s and LDT4s, 1.000 g/test for MDPVs, 1.4 g/test for HDGVs at or below 14,000 lbs GVWR, and 1.9 g/test for those above 14,000 lbs GVWR, respectively. These FEL caps are the 3-day hot soak plus diurnal emission standards currently applicable under EPA's regulations. The vehicle groupings for defining these FEL caps differ somewhat from the groupings that apply for the standards; we request comment on the need to reconcile these different groupings.

Evaporative emission credits under the proposed Tier 3 hot soak plus diurnal standards would be calculated differently in the 2017 model year and the 2018 and later model years. For 2017 calculations would be based on sales in the U.S. excluding California and the section 177 states which have adopted the LEV III/ZEV programs. For 2018 and later model years it would be based on all 50 states. Calculations would use the following equation: Credits = (fleet average standard − fleet average FEL) × ''U.S. sales''. The ''fleet average standard'' term here is the applicable Tier 3 hot soak plus diurnal standard for the vehicle category from Table IV–18. The sales number used in the 2018 and later MY calculation would be the number of vehicles of the evaporative emission families in that category sold in the U.S. which are subject to the Tier 3 evaporative emission standards.[284] Emission credits banked under the proposed evaporative emission ABT program would have a five year credit life and would not be discounted. This means the credits would maintain their full value through the fifth model year after the model year in which they are generated. At the beginning of the sixth model year after they are generated, the credits would expire and could not be used by the manufacturer. We are proposing to limit credit life so there is a reasonable overlap between credit generating and credit using vehicles. As mentioned above, for purposes of the compliance calculation, allowance vehicles would have an FEL equivalent to the EPA emission standard (Table IV–18) for their respective vehicle category.

We request comment on all aspects of the ABT program. In particular, we request comment on the structure of the proposed evaporative emission ABT program and how the various provisions may affect manufacturers' ability to utilize ABT to achieve the desired evaporative emission-reductions in the most efficient and economical way. We also ask for comment on basing ABT calculations on nationwide sales in 2018 and later model years, even if there is a separate calculation for California and the section 177 states.

d. Compliance Demonstration

Demonstration of compliance with the evaporative emissions standards would be done after the end of each model year. There are two steps. In the first step, manufacturers would have to show compliance with the phase-in percentages whether they used the primary phase-in scheme or an alternative phase-in scheme. It is sales from these families together with their respective FELs which would be used to make the demonstration of compliance with the emission standard on average within each vehicle averaging set. Compliant vehicles types for these purposes would be the same as described in Section IV.C.2.a above for projected sales. If the required sales percentages are not met by direct sales or allowances, non-Tier 3 vehicles would have to be identified to make up the shortfall. In the second step, using

[284] If EPA ultimately decided to continue the disaggregated approach to fleet compliance calculations, we could potentially base compliance with the proposed Tier 3 evaporative emission requirements on U.S. sales (i.e., non-California and non-section 177 states).

the family emission limits, manufacturers would calculate the sales-weighted average emission levels within each of the four vehicle categories using U.S. sales.[285] Manufacturers would be allowed to use credits only within a defined averaging set. The averaging sets are: (1) LDVs and LDT1s, (2) LDT2s, (3) LDT3s, LDT4s, and MDPVs, and (4) HDGVs. These sales-weighted calculated values would have to be at or below the emission standard for that vehicle category as proposed in Table IV–18, unless credits from ABT are used. If the difference between the standard and the sales-weighted average FEL is a positive value this could be a banked credit available for future use. If the difference between the standard and the sales-weighted average FEL is a negative value this would be a credit deficit. Credit deficits would be allowed to be carried forward. However, manufacturers would be required to make up the deficit within the next three model years with credits from vehicles in the same averaging set except as described below. As discussed above, manufacturers would be required to identify and include in the calculations vehicle families from each and any covered category (see Table IV–18) whose total annual nationwide sales in the given model year equals or exceeds the prescribed percentages. If the inclusion of non-Tier 3 vehicles results in an exceedance of the hot soak plus diurnal emission standard for that category of vehicles, the credit deficit would have to be made up in a subsequent model year.

Allowances could also be used to demonstrate compliance with the percentage phase-in requirements and the vehicle category average emission standard. For purposes of the percentage phase-in requirements vehicles which have earned allowances are counted as compliant in the percentage calculation. For purposes of the calculations for compliance with the emission standard, allowance vehicles enters into the evaporative emissions ABT calculation as having an emission rate equivalent to the standard for that category of vehicle. Thus, allowance vehicles would help in demonstrating compliance with the percentage phase-in requirement (up to ten percentage points per model year) and would help in reducing deficits since their calculation value would be equivalent to the level of the standard. EPA asks for comment on whether allowances should be permitted to be used across vehicle categories during the transition years.

As was discussed above, during the 2017–2019 model years EPA is allowing manufacturers to meet the percentage phase-in requirements using carryover certification data from vehicles certified to CARBs Option 1 standards in the 2015 or 2016 model years. These vehicles may have CARB Option 1 certification values slightly higher than those proposed for EPA's Tier 3 program for the given vehicle and vehicle category. Since the emission standard values in Tables IV–18 and IV–19 are very similar for any given vehicle category, for purposes of simplification during the phase in, EPA proposes that any CARB Option 1 vehicles used in the 2017–2019 MY emission standard compliance determination be entered into the calculation with the emission level equivalent to the Tier 3 vehicle category in which the vehicle model would otherwise fit. Furthermore, we are proposing not allowing manufacturers to generate emission credits for families certified with EPA based on carryover CARB PZEV evaporative emissions data using CARB Option 1 as in Table IV–19. We are proposing not to include these vehicles in the ABT program since the programs are not directly comparable, and the structure of the current CARB ZEV program, which is the genesis of most PZEV offerings, allows for a different number of PZEV sales as a function of manufacturer size.

As mentioned above, we are proposing to limit use of credits only within a defined averaging set. Cost effective technology is available to meet the proposed hot soak plus diurnal emission standards on average within each of the vehicle categories in the averaging sets, especially since the proposed standards are designed to accommodate nonfuel hydrocarbon background emissions. Thus, further flexibility is not needed. Moreover, we are proposing to constrain averaging to within these sets because of equity issues for the manufacturers. We are concerned that the four or five manufacturers with a wide variety of product offerings in most or all of these categories would have a competitive advantage over the majority of manufacturers which have more limited product lines. This effect could be even more pronounced if the number of evaporative families was considered, since larger more diverse manufacturers have more models and thus more evaporative families. EPA asks for comment on issues related to averaging sets.

Manufacturer use of credits from different averaging sets to demonstrate compliance would be permitted in limited cases. As noted above, if a manufacturer has a credit deficit at the end of a model year in a given averaging set, they would have to use credits from the same averaging set during the next three years to make up the deficit. However, if a deficit still exists at the end of the third year, we propose that the manufacturer could use credits from a different averaging set to cover the remaining deficit with the following limitations. Manufacturers would be able to use credits from the LDV and LDT1 averaging set to address remaining deficits in the LDT2 averaging set, and vice versa. We also are proposing that manufacturers be permitted to use credits from the LDT3, LDT4, and MDPV averaging set to address remaining deficits in the HDGV averaging set, and vice versa. No other use of credit exchanges across different averaging sets would be allowed. These restrictions are being proposed because of equity concerns caused by the different nature and size of various manufacturer product lines.

During the program phase in there will be a declining percentage of vehicles not yet covered by the proposed Tier 3 evaporative emission requirements and thus covered by the current EPA requirements in 40 CFR 86.1811–09 and 86.008–10. These vehicles would need to be certified to current EPA requirements or seek EPA certificates based on LEV II or LEVIII emission data, subject to the certification fuel requirements discussed below.

For both the percentage phase-in and sales-weighted average calculation steps above, we are proposing to base the calculation on nationwide sales (excluding California and the section 177 states in the 2017 MY) and annual nationwide sales beginning in the 2018 MY. We believe this approach is consistent with the manufacturers' plans for 50-state vehicles. A program design which would enable a nationwide program has been an important premise of this proposal. Furthermore, this is simpler for the manufacturers and for EPA since it relieves the need to project future model year sales or track past model year sales at a disaggregated level. We recognize that decisions by manufacturers on a national fleet versus a bifurcated approach such as exists today (California and section 177-states separate from the rest of U.S. sales) have

[285] The only exception here would be for vehicles not meeting Tier 3 evaporative emission requirements in the 2022 MY as a result of the use of previously earned allowances.

not yet been made.[286] The CARB LEV III and EPA phase-in requirements are identical beginning in 2018, so EPA sees little need for concern that a nationwide-based accounting approach could lead to disproportionate state by state impacts or the encouragement of practices which would lead to any particular state or area not receiving the anticipated emission reductions with this nationwide approach to the calculation. However, for evaporative emissions for the 2017 MY we are proposing that percentage phase-in and sales be done on a disaggregated level (i.e., California and section 177 states and the remainder of the country) since at the present time the anti-backsliding provisions of the LEV III evaporative emissions program stays in place through the 2017 MY. This is being done differently for the calculations for the early allowance program because these ''zero evap'' vehicles are already counted in the pre-existing ARB program.

As was discussed above, manufacturers not meeting the percentage phase-in requirements would need to include non-Tier 3 vehicles in the count and include their emissions in the overall calculation of compliance with the hot soak plus diurnal standard and resolve shortfalls in compliance with the emission standard with future reductions, earned allowances, or credits. Resolving this sales percentage shortfall problem becomes a bit more complicated for the 2017 MY 20 percent option upon which EPA is seeking comment, because it would require that 20 percent of vehicles meet the proposed Tier 3 evaporative emission requirements and that 20 percent meet the proposed leak emission standard. These may or may not be the same vehicles, (e.g., non-Tier 3 vehicles could end up in the end of year calculation and we are seeking comment on whether to allow the two 20 percent requirements to be allowed to be met on different vehicles). As a means to resolve this potential problem, EPA asks comment on a provision which would require that any shortfall of either of the 20 percent values (Tier 3 evaporative or leak emission standard) for the 2017 MY be covered by future sales of vehicles meeting the Tier 3 evaporative emission requirements in excess of the evaporative emission percentage sales requirement for that MY or some combination of MYs. For example, if a manufacturer were 5 percentage points short in the 2017 MY, then it would have to accelerate sales of vehicles meeting Tier 3 evaporative emission requirements in the 2018–2021 MYs to cover the 5 percentage points (e.g., 65 percent in 2018 instead of 60 percent or 63 percent in 2018 MY and 62 percent in the 2019 MY, etc.).

e. Small Volume Manufacturers

As another flexibility, we are proposing that small volume manufacturers, those with average annual nationwide sales of 5,000 units or less, be permitted to delay meeting the proposed Tier 3 evaporative emission standards, including the requirement to use EPA certification test fuel, until the 2022 MY (see Section IV.E.5 below for a discussion of our proposed 5,000 vehicle threshold). This would include the hot soak plus diurnal standards, the canister bleed emission standard, and the leak emission standard. In the interim, these vehicles would have to meet the current evaporative and refueling emission standards. The initial determination of whether a manufacturer is under the 5,000 unit threshold would be based on the three year average of actual nationwide sales for MYs 2012–2014. This allowance would not be affected if a qualifying manufacturer's nationwide sales later exceeded that value before 2022. Similarly, new market entrants (not in the market in the 2012 MY) with projected sales of less than 5,000 units could be covered by the small volume manufacturer provisions. However, in this case if actual running average nationwide sales exceeded 5,000 units per year in any three consecutive model years they would have to meet the Tier 3 evaporative requirements in the third model year thereafter. For example, if a new market entrant in 2015 projected nationwide production of 4,000 units per year and the average of actual values in 2015–2017 exceeded 5,000 units per year they would have to meet Tier 3 evaporative requirements by the 2020 MY.

f. High-Altitude Requirements

We adopted the most recent vehicle evaporative emission standards in 2007.[287] These newest standards apply only to testing under low-altitude conditions.[288] In that rule, we decided to continue to apply the previous ''Tier 2'' standards for testing under high-altitude conditions. This was necessary to achieve an equivalent level of overall stringency for high-altitude testing. This was intended to account for the various effects of altitude and lower atmospheric pressure on vapor generation rates, canister loading and purging dynamics, and other aspects of controlling evaporative emissions due primarily to lower air and vapor concentrations in air. While it is important for vehicles to have effective emission controls at high altitudes, we do not want the high-altitude standards and test procedures to dictate the fundamental design of the Tier 3 evaporative emission control systems since the high altitude vehicle population is only about five percent of the national total. Therefore, we believe it is appropriate to address this goal by applying the current EPA 2-day low altitude evaporative emission standards and requirements for high-altitude testing. The vehicle categories for the high altitude standards in this proposed rule are the same as for the low altitude standards. The proposed standards are presented below in Table IV–20. This would both reduce emissions at high altitude and again create a requirement to confirm that emission controls function effectively at high altitude without forcing manufacturers to apply altitude-specific technologies. Furthermore, the leak emission standard proposed in Section IV.C.5.b below would apply equally at low and high altitude testing.

TABLE IV–20 PROPOSED HIGH-ALTITUDE EVAPORATIVE EMISSION STANDARDS

[g/test]

Vehicle category	Highest hot soak + diurnal level (over both 2-day and 3-day tests) (g/test)
LDV, LDT1	0.65
LDT2	0.85
LDT3, LDT4	1.15
MDPV	1.25
HDGVs ≤ 14,000 lbs GVWR	1.75
HDGVs > 14,000 lbs GVWR	2.3

A few additional points should be noted about our proposed Tier 3 high altitude evaporative emissions control program. First, by proposing to apply the current low altitude evaporative emission standards and requirements by category for high-altitude, we are proposing not to include the canister bleed test and emission standard. These vehicles would have to meet the canister bleed emission standard at low altitude and any adjustment to meet the

[286] If the decision is ultimately made to continue the disaggregated approach to fleet compliance calculations, the compliance with the proposed Tier 3 requirements would be based on U.S. sales (non-California, non-section 177 states).

[287] 72 FR 8428 (February 26, 2007).

[288] *High-altitude conditions* means a test altitude of 1,620 meters (5,315 feet). *Low altitude conditions* means a test altitude less than 549 meters (1,800 feet).

standard at high altitude to account for canister adsorption and desorption effects of higher altitudes would result in fundamentally the same technology and increase the testing burden, but not necessarily lead to more emissions control. Therefore, we believe the low-altitude canister bleed test is sufficient for achieving the proposed level of emission control for operation in both low-altitude and high-altitude conditions. Second, for vehicles certified with FELs above or below the applicable standard for testing at low altitude, we propose that the same differential apply to the FELs for high-altitude. For example, if an LDV was certified with an FEL of 0.400 g instead of the 0.300 g standard, the high-altitude FEL would be 0.75 g (0.65g + 0.10g). This high-altitude FEL would not be used for any emission-credit calculations, but it would be used as the emission standard for compliance purposes. Third, gasoline RVP for certification test fuel would be set at 7.8 RVP with 15 percent ethanol, as specified in Section IV.D. Finally, we are proposing a minor adjustment to the high altitude test procedures. Today, the 2- and 3-day test procedures apply equally at low and high altitude. We are proposing to keep that requirement but to allow for an adjustment of 5 °F in the temperatures related to the running loss test within the 3-day test cycle. Thus, the applicable fuel and ambient temperatures at § 86.134–96 (f) and (g) would 90 ± 5 °F instead of 95 ± 5 °F for high altitude testing. EPA believes this is appropriate given the differences in atmospheric conditions at low versus high altitude and will still result in equivalent control of running loss emissions at higher altitudes. We request comment on the alternative approach of keeping test temperatures the same, but omitting the 3-day test cycle for testing at high altitude. This would effectively establish the 2-day test cycle as a sufficient means of demonstrating that emission control systems continue to operate properly at high altitude.

As mentioned above, emission data from vehicles meeting the current CARB zero evap and useful life requirements could be used to qualify that vehicle to meet the Tier 3 evaporative emission regulations for the 2017–2019 MYs. To qualify for a federal certificate, the vehicle would also have to meet the Tier 3 high altitude evaporative emission requirements. While CARB requires vehicles to meet EPA high altitude requirements, we ask for comment on the need for and value of an interim option which would permit manufacturers to gain such certification by an engineering demonstration that the vehicle would comply at any altitude rather than by performing additional testing.

g. Technological Feasibility

The basic technology for controlling evaporative emissions was first introduced in the 1970s. Manufacturers routed fuel tank and carburetor vapors to a canister filled with activated carbon, where vapors were stored until engine operation allowed for purge air to be drawn through the canister to extract the vapors for delivery to the engine intake. Over the past 30 years, evaporative emission standards have changed several times, most notably in the mid-1990s when enhanced evaporative controls were required to address 2- and 3-day diurnal emissions and running losses. Refueling emission controls were added with phase-in beginning in the 1998 MY. Almost universally manufacturers elected to integrate evaporative and refueling emission control systems. In the mid-2000s more stringent evaporative emission standards with E10 durability gasoline led to the development and adoption of technology to identify and eliminate permeation of fuel through fuel tanks, fuel lines, and other fuel-system components.

i. Hot Soak Plus Diurnal

The current baseline technology for LDVs, LDTs, and MDPVs is a properly designed and assembled fuel/evaporative system for controlling emissions over the 2- and 3-day test sequences to meet the current standard of 0.650 grams/test. This involves activated carbon canisters which capture gasoline vapors, with engine calibrations designed to maximize canister purge over the test sequence. Fuel systems generally include widespread use of various grades of permeation-resistant materials.

The anticipated control technologies to comply with the proposed hot soak plus diurnal evaporative emission standards include an improved carbon canister designs to even better capture vapor emissions from the canister, air intake designs to prevent the escape of unburned fuel from the engine's crankcase, various upgrades to further limit potential micro-sized leaks, and further steps to reduce permeation rates. Applying these new or improved technologies will allow manufacturers to meet the proposed 300 mg standard for LDVs/LDT1s. The proposed evaporative emission standards are slightly higher for larger vehicles to account for potentially higher background emissions and in some cases larger surface area components, but the baseline and anticipated control technologies follow a very similar path. These baseline and control technologies are described further in the rest of this section.

Current evaporative canisters use high working-capacity activated carbon, usually with multiple compartments, to optimize vapor loading and purging behavior. These canisters sometimes employ carbons of different working capacities within each chamber. Testing indicates that the total canister adsorption capacity in grams of gasoline vapor is generally dictated by the requirements of the refueling emission test and standard rather than the evaporative emission test (either the 2- or 3-day sequence).

Manufacturers have identified the engine's intake system as another source of evaporative emissions. These result from crankcase vapors and from unburned fuel from injectors, or sometimes from an injection event that occurred shortly before engine shutdown. We estimate a typical emission rate of about 40 mg associated with each engine shutdown event; however, since the actual emission rates depend on timing of individual injection events and cylinder position at shutdown, baseline emission rates can vary significantly. These vapors must follow a contorted path before reaching the ambient air, which would generally cause these emissions to show up during the first day of the diurnal test rather than the hot soak test. One way to prevent these emissions is to add activated carbon to the air intake downstream of the air filter, typically in the form of reticulated foam coated with activated carbon. This device would have only a few grams of working capacity and would be designed to purge easily to ensure that the vapor storage is available at engine shutdown. This carbon insert would almost completely eliminate any vapor emissions from the air intake system.

Manufacturers wanting to avoid adding any specialized emission control component to control evaporative emissions from the air intake could pursue alternative approaches. First, it is possible to allow the engine to continue rotating for 2–3 revolutions after engine shutdown to sweep any hydrocarbon vapors from the intake system into or through the cylinder. These vapors could be burned in the cylinder, oxidized at the catalyst, or stored until the engine starts again. This may still allow for a small amount of residual vapor release, but this should be a very small quantity. Vehicle owners

would be unlikely to notice this amount of engine operation after shutdown. Second, to the extent that manufacturers use direct injection, there should be no fuel vapor coming from the intake system. Any unburned fuel coming from the injectors would be preserved in the cylinder or released to the exhaust system and the catalyst. A small amount of crankcase vapor might remain, but this would likely not be enough to justify adding carbon to the intake system.

Fuel tanks are designed to limit permeation emissions. Fuel tanks are typically made of high-density polyethylene with an embedded barrier layer of ethyl vinyl alcohol (EvOH) representing about 1.8 percent of the average wall thickness. The EvOH layer is effective for reducing permeation emissions. Recent developments in production processes have led to improved barrier coverage around the ends of the tank where the molded plastic is pinch-welded to form a closed vessel. We are expecting manufacturers to increase the EvOH barrier thickness to about 3 percent of the average wall thickness to provide a more uniform barrier layer, to provide better protection with ethanol-based fuels, and to improve permeation resistance generally. These changes are expected to decrease emission rates over the diurnal test from about 40 mg per day to 15 mg per day from the fuel tank assembly or less.

Fuel lines are also already designed for low permeation rates. The biggest portion of fuel and vapor lines are made of metal, but that may still leave several feet of nonmetal fuel line. There may be development of new materials to further reduce permeation rates, but it is more likely that manufacturers will adjust the mix of existing types of plastic fuel lines to achieve the desired performance at the lowest possible price.

The bigger area of expected development with respect to fuel lines is to re-engineer fuel systems to further reduce the number of connections between fuel-system components and other fuel-line segments. Today these systems may involve more than the optimum number of connections and segments due to assembly and production considerations or other factors. Designing the fuel system more carefully to minimize connection points will limit possible paths for fuel vapors to escape. This would reduce emission rates and it should also improve system durability by eliminating potential failure points. A broader approach to addressing this source of emissions is to integrate designs and to move fuel-system components inside the fuel tank, which eliminates the concern for vapor emissions and permeation from those components and connections.

A remaining area of potential evaporative emissions is the connection between the fill neck and the fuel tank. Manufacturers can reduce emissions by perhaps 10 mg per day by making this connection permeation-resistant. The challenge is to design a low-cost solution that is easily assembled and works for the demanding performance needs related to stiffness/flexibility. The best approach is likely either to use mating parts made from low-permeation materials, or to use conventional materials but cover this joint with material that acts as a barrier layer.

Purge rates are currently designed to flow relatively large volumes of outside air through the canister when the purge solenoid is activated. This involves using available manifold vacuum to create purge flow, with limits in place to avoid drawing too much unmetered fuel vapor from the canister. Tightening the evaporative emission standard would lead manufacturers to address remaining emission sources from micro-size leak points, permeation, and diffusion, as noted above. Since the amount of additional vapor being captured by the carbon canister is small and the test procedure is not changing, we do not expect the change in standards to drive changes in purge strategy, rates, or canister capacity. Nonetheless, vehicle system and engine changes to improve fuel economy could impact future purge strategies. Thus, as part of this approach, manufacturers may incorporate designs to reduce vapor volume/mass directed to the canister and thus potentially reduce the purge air volume requirements. In addition, canister designs can be optimized to increase the effectiveness of a given volume of purge air. This could involve selecting different combinations of carbon characteristics and canister architecture types and by adding features to add heat (or preserve heat) in the canister during a purge event. It is also possible that fuel economy strategies which impact purge volume may lead some manufacturers to add vacuum pumps to supplement engine-based purge on some vehicle models in the future.

It is worth noting that there may be some models where manufacturers incorporate hardware or another control technique that may not be widely used across by all manufacturers or across all models. This is especially true for this set of proposed emission control requirements since we are considering such a wide array of basic vehicle and engine designs. Also, future vehicle/engine systems such as hybrids may have more unique challenges in areas such as the diurnal fuel tank vapor load sent to the activated carbon canister and subsequent purging of those vapors. In response to this challenge, manufacturers may employ techniques to reduce fuel tank vapor generation and/or to enhance purge efficiency. Hardware such as a vapor blocking valve or other techniques to enhance purge efficiency from the canister through heating may be employed to a limited degree.

The technologies discussed above are in use to varying degrees on many of the CARB PZEV zero evap vehicles mentioned above. Taken together, we believe these technologies provide manufacturers with effective tools for reducing emissions sufficiently to meet the proposed evaporative emission standards.

ii. Canister Bleed Emission Standard

More stringent evaporative emission standards have led to more careful measurements, which led manufacturers to discover that 80 mg or more of fuel vapor would diffuse from the canister vent as a result of the normal redistribution of vapors within the activated carbon while the vehicle is at rest. The emission rate depends on the tank volume, its fill quantity, and the size and architecture of the canister and the characteristics of the carbon itself. While the biggest effect of this vapor distribution is a uniform concentration within the canister, it can also cause vapors to escape through the canister vent even without continued canister loading that would result from fuel tank heating. These are referred to as canister bleed emissions. These emissions occur to some degree during the 2- and 3-day evaporative emissions test, but a separate standard is needed if the goal of near zero fuel vapor emissions is to be achieved.

The design to address this concern is a supplemental ''scrubber'' canister (or canister compartment) with a very low working capacity carbon. Adding 100 or 200 ml of this type of carbon near the canister vent provides a margin of ''reserve capacity'' to capture diffusion losses from the canister. Since this extra carbon has low working capacity and it purges readily, it is typically cleared of hydrocarbon vapors and ready to perform its function after any amount of engine operation or even with natural back purge which occurs when the fuel in the tank cools. This scrubber element is expected to eliminate all but 5–10 mg of emissions from the evaporative canister over the measurement procedure.

iii. Leak Emission Standard

Vapor leaks in the vehicle fuel/evaporative system can arise from micro-cracks or other flaws in various fuel/evaporative system component structures or welds, problems with component installations, and more generally from connections between components and fuel lines and vapor lines. Because these emissions from these areas would occur in the 2–3 day evaporative emissions test if the problems were present, manufacturers have taken steps to address these potential problem areas as part of their overall evaporative emissions control strategy. Since the 2- and 3-day hot soak plus diurnal standards are proposed to become more stringent and leak emissions occur during the evaporative emissions test, we expect manufacturers to take the measures described above in Section IV.C.2.g.i. These include reducing connections, improving the quality of fuel and vapor line connections, use of improved component materials and revised installation practices. Manufacturers could also review their OBD leak warranty data and related information from OBD queries to help inform their strategies. One of the key reasons for proposing a leak emission standard is to promote the continuing development of designs, part production techniques, and assembly practices which will yield less in-use emissions deterioration and improved in-use emissions performance. EPA believes this focus on in-use durability is important because a vehicle with even a small leak, e.g., the size of the 0.020–0.040 inch orifice diameter monitored by OBD systems would likely emit above the proposed hot soak plus diurnal evaporative emission standard in use.

3. Heavy-Duty Gasoline Vehicle (HDGV) Requirements

a. Overview of the Proposal for HDGVs

As presented above, EPA is proposing to include HDGVs within the Tier 3 evaporative emissions program. The proposed hot soak plus diurnal and canister bleed test emission standards that would apply to these HDGVs are as presented in Table IV–18 and the high altitude standard is presented in Table IV–20. These vehicles would be included in the averaging calculation beginning in the 2018 MY and would be eligible for creating and using allowances and credits as discussed above. Furthermore, for the reasons discussed below, EPA is proposing that HDGVs equal to or less than 14,000 lbs GVWR be required to meet the refueling emission standard by the 2018 MY.

b. Background on the HDGV Sector

HDGVs are generally gasoline-powered vehicles with either a GVWR of greater than 8,500 lbs, or a vehicle curb weight of more than 6,000 lbs, or a basic vehicle frontal area in excess of 45 square feet.[289] HDGVs are predominantly but not exclusively commercial vehicles, mostly trucks and other work type vehicles built on truck chassis. EPA often discusses HDGVs in three basic categories for regulatory purposes according to their GVWR class. These include Class 2b (8,501–10,000 lbs GVWR), Class 3 (10,001–14,000 lbs GVWR), and Class 4 and above (over 14,000 lbs GVWR). These are further sub-categorized into complete and incomplete vehicles.[290] Class 2b HDGVs are mostly produced by the manufacturers as complete vehicles and are very similar to lower GVWR LDTs of the same basic model sold by the manufacturers. Class 3 HDGVs are also built from LDT chassis with fuel system designs that are similar to their Class 2b and LDT counterparts, but these are on some occasions sent to secondary manufacturers as incomplete vehicles to attach a load carrying device or container. EPA estimates that more than 95 percent of Class 2b/3 vehicles are complete when they leave the original equipment manufacturer (OEM). Class 4 and above HDGVs are built on a more traditional heavy-truck chassis and in most cases leave the OEM as an incomplete vehicle. For Class 2b/3 vehicles, it is common to certify the vehicle for emissions purposes (exhaust, evaporative, etc) as a full chassis, while for Class 4 and above the vehicle is certified as a chassis for evaporative emissions while the engine is dynamometer certified for exhaust emissions.

For LDVs and LDTs, the current EPA evaporative and refueling emission test procedures are the same for all vehicle categories and the emission standards are of a similar but not always identical stringency, within the subclasses. However, this is not true for HDGVs. For HDGVs, the level of the evaporative emission standards and the test procedures vary by category and the refueling emission control requirements are also different. There are several reasons for these differences, including variations in the size, design, and other properties of the basic fuel system, the dimensions of the vehicles, and the potential for actions of secondary manufacturers to impact the fuel system. There are many fuel system similarities between Class 2b/3 HDGVs and heavy LDTs, but fewer similarities between heavy LDTs and HDGVs in Class 4 and above.

Over the past 15 to 20 years, there have been several notable changes in HDGV products and market that have influenced the application of evaporative and refueling emission control requirements and may impact potential new or revised requirements going forward. Most noteworthy among these are the increased use of diesel engines across all weight classes and the emergence of better defined market segments for primary OEMs and secondary manufacturers.

The increased use of diesel engines has reduced overall HDGV sales and brought about a consolidation of manufacturer HDGV product offerings. For Class 2b/3 HDGVs, these are now all derived from LDT chassis and have the same basic fuel system and engine characteristics. This has led EPA to extend the light-duty evaporative and refueling test procedures and emission standards to the Class 2b/3 HDGVs, when applicable. In a rule promulgated in 2000, EPA required manufacturers to certify these HDGVs using light-duty test procedures. Also, in this same rule, EPA extended the vehicle refueling emission standards to complete Class 2b vehicles. These actions were technically appropriate because of the similarities between the LDT and Class 2b HDGVs and fuel systems and the large fraction of complete Class 2b HDGVs produced by the vehicle manufacturers. Today, fuel systems for Class 3 HDGVs are comparable those for Class 2b HDGVs, so it is reasonable and technically feasible to extend the Class 2b refueling emission requirements to Class 3 HDGVs.

Class 4 and heavier HDGVs still play a small but important role in the traditional truck and heavy-duty vehicle markets. These vehicles are sometimes distinctly different from Class 2b/3 vehicles in terms of testing, chassis designs, and fuel system characteristics; secondary manufacturers also play a larger role in the overall completion of the vehicle. For these vehicles, the engines are certified for emissions on an engine dynamometer while the evaporative emissions are certified separately on the vehicle chassis. Furthermore, these vehicles are larger

[289] MDPVs also meet the definition of HDVs, but they are classified separately for evaporative and refueling emission purposes. See 40 CFR 86.1803–01.

[290] Vehicles may be complete or incomplete vehicles. A complete HDGV is one that has the primary load carrying device or container (or equivalent equipment) attached, normally by the vehicle OEM. An incomplete vehicle is one that does not have the primary load carrying device or container (or equivalent equipment) attached when it is first sold. This may include vehicles sold to secondary vehicle manufacturers.

dimensionally (which often means longer fuel and vapor lines) and have larger volume fuel tanks (sometimes two), which may be mounted on the underbody or side-rail. It is common for a secondary manufacturer to complete the vehicle by adding the cargo container or other working equipment box or package (e.g., small cargo truck or tow truck) and in some cases to reconfigure components. While the extrapolation of refueling emission control technology is conceptually straightforward, in some cases there may be unique technical issues related to implementing refueling emission controls for these heavier HDGVs relative to Class 2b/3 HDGVs and LDTs.

Based on these considerations, EPA is proposing that the refueling emission standards in § 86.1816–05 to apply to Class 3 HDGVs as well. This is appropriate because the fuel and evaporative control systems on these vehicles are very similar to those on their slightly lighter-weight Class 2b counterparts, and in some cases Class 3 HDGVs are already designed to meet this proposed requirement. EPA is proposing that this requirement be met beginning in the 2018 MY. EPA is also proposing that manufacturers be permitted to comply as early as the 2015 MY to earn on a one-to-one basis allowances which could be used to phase-in the Class 3 refueling emission control requirement or as an allowance under the Tier 3 evaporative emission program. EPA believes this is appropriate since the expected daily average reduction in vehicle refueling emissions for this class of vehicles is large relative to the reduction in evaporative emissions expected under Tier 3. Any certifications, including those done early, must use EPA Tier 3 test procedures and certification test fuels.

c. Other Potential Program Elements for HDGVs

EPA is seeking comments on several other programmatic elements related to the Tier 3 evaporative and refueling emission control proposal.

First, even if we do not revise the current evaporative emission standards for these vehicles and they are not required to control refueling emissions, we are seeking comment on requiring manufacturers to certify their evaporative emissions using Tier 3 certification test fuel. Tier 3 certification test fuel would provide equivalent or better emissions control as compared to current certification test fuel in terms of the fuel quality impact on emission control system designs to meet the existing evaporative emission standards and would provide equivalent or better in-use performance. Requiring this new certification test fuel has the potential to add efficiency to the certification process since manufacturers could certify one system for EPA and CARB for each evaporative family. Since incomplete vehicles and those over 14,000 lbs GVWR often do not use the same test vehicle/engine for evaporative and exhaust emission testing, we seek comment on whether a requirement for vehicle evaporative and/or refueling emission certification on Tier 3 test fuel would technically necessitate engine exhaust emission certification on Tier 3 test fuel.

Second, as mentioned in Section IV. B., EPA is also seeking comment on requiring the use of Tier 3 certification test fuel for HDGVs which are engine-dynamometer certified, not chassis-certified, for exhaust emissions. This would potentially include all engine families certified for use in HDGVs above 8,500 lbs. GVWR. We are seeking comment on this change because we believe it may be the best and most representative technical approach for the future in the context of the engine/emission control system/fuel system design and performance and fuel quality. Overall, we believe this change to the certification test fuel for HDGVs would provide equivalent or better emissions control for the regulated pollutants as compared to current certification test fuel, in terms of the impact of fuel quality on emission control system designs and in-use performance, and may also simplify manufacturers' testing operations by providing for a single test fuel. We are also seeking comment on putting this requirement in place in the 2020–2022 MY time frame. Consistent with the approach proposed in Section IV.D.4 for light- and heavy-duty vehicles, we are committed to the principle of ensuring that any change in test fuel for heavy-duty engines would not affect the stringency of either the fuel consumption or GHG emissions standards. As part of the separate rulemaking discussed in Section IV.D.4, we would expect to establish the appropriate test procedure adjustment for HD engine fuel consumption standards and to determine the need for any test procedure adjustment for GHG emissions standards based on the change in certification test fuels.

Third, to simplify the evaporative emission regulations for HDGVs and to bring them more in line with the current structure of the product offerings in this sector, we are proposing to permit evaporative emissions certification by engineering analysis for vehicles above 14,000 lbs GVWR (instead of above 26,000 lbs GVWR as is permitted in the current regulations). These HDGVs would remain subject to the emission standards when tested using the specified procedures. This is the same cut point allowed by CARB and would allow for one certification method. Furthermore, for HDGVs over 14,000 lbs GVWR, we request comment on taking an additional step to rely even further on design parameters and engineering analysis. Under this approach, manufacturers would need to demonstrate that the design of their purge strategy, canister capacity, and overall control system would control emissions to the same degree as similar (or comparable) Class 2b or Class 3 vehicles that meet emission standards when tested over the established measurement procedures. The standard would be a performance standard in that the manufacturer could use any design that met the criteria of controlling emissions to the same degree that occurs in vehicles that meet the emissions standard. However, unlike the proposed approach, compliance with the standard would be based solely on an engineering review of the design. Compliance would not be determined by measuring performance on the emissions test. This would take into account the limitations in managing any significant degree of testing with these over-size vehicles. In particular, we request comment on the enforceability of taking the approach of a design standard.

Fourth, we are proposing a revised description of evaporative emission families that does not reference sealing methods for carburetors or air cleaners as this technology is now obsolete for heavy-duty gasoline engines.

Fifth, we also seek comment on the implications on these evaporative emission standards were we to require the certification test fuel to be 10 psi RVP E10 as discussed below in Section IV.D.1.

Sixth, we are proposing to clarify how evaporative emission standards affect engine manufacturers and proposing more descriptive provisions related to certifying vehicles above 26,000 lbs GVWR using engineering analysis. These improved descriptive provisions would apply to vehicles above 14,000 GVWR lbs if the proposed change in GVWR cut point for engineering analysis certification is finalized.

Finally, EPA is asking for comment on several other provisions related to the heavier HDGVs (over 14,000 lbs GVWR). First, if we do not include these heavier HDGVs in the Tier 3 final rule requirements, we are asking comment on whether manufacturers should be

able to voluntarily certify any HDGVs not covered by the rule to the same requirements as being proposed for Class 2b/3 HDGVs, and through this action earn allowances and credits for use within the Tier 3 program as discussed above for other vehicles. This would include both evaporative and refueling emissions standards. Second, EPA also asks comment on whether there should be a provision to permit HDGVs over 14,000 lbs GVWR to be grouped with those between 10,001 and 14,000 lbs GVWR for purposes of complying with evaporative and refueling emission control standards and related provisions. In these cases, we would expect these HDGVs to meet all the requirements applicable to the group in which they are being included (e.g., useful life, OBD, etc.).

4. Test Procedures and Certification Test Fuel

a. Review and Update of Testing Requirements

EPA adopted the current test requirements for controlling evaporative emissions in 1993.[291] Those changes included: (1) Diurnal testing based on heating and cooling the ambient air in the SHED [292] instead of forcing fuel temperatures through a specified temperature excursion; (2) repeated 24-hour diurnal measurements to capture both permeation and diurnal emissions; (3) high-temperature hot soak testing; (4) high-temperature running-loss measurements with a separate standard, including controlled fuel temperatures according to a fuel-temperature profile developed for the vehicle; and (5) canister preconditioning to ensure that vehicles could effectively create canister capacity to prepare for several days of non-driving.

These test procedures are generally referred to as ''enhanced evap'' testing. EPA adopted these ''enhanced evap'' test procedures in coordination with CARB. The test requirements include two separate test sequences to demonstrate the effectiveness of evaporative emission controls. The ''two-diurnal sequence'' involves canister loading to two-gram breakthrough, followed by driving for the exhaust test (about 31 minutes), a hot soak test, and two days of cycled ambient temperatures. The ''three-day sequence'' involves canister loading with 50 percent more vapor than needed to reach breakthrough, followed by driving for the exhaust test, driving for the running loss test (about 97 minutes total), a high-temperature hot-soak test, and three days of cycled ambient temperature.

The 2-day sequence was intended primarily to insure a purge strategy which would create enough canister capacity to capture two days of diurnal emissions after limited driving. The two-day measurement period was effective for requiring control of permeation and other fugitive emissions. The 3-day sequence was intended to establish a design benchmark for achieving adequate canister storage capacity to allow for several days of parking on hot summer days, in addition to requiring vehicle designs that prevent emissions during high-temperature driving and shutdown conditions.

After adopting these evaporative test procedures, we set new standards for refueling emissions control which called for onboard refueling vapor recovery (ORVR).[293] Manufacturers have typically designed their ORVR systems to be integrated with their evaporative controls, using a single canister and purge strategy to manage all fuel vapors vented from the fuel tank. Due to the magnitude of the refueling emission load and the manner in which the load rates affect activated carbon capture efficiency, it has become clear that ORVR testing with these integrated systems serves as the benchmark for achieving adequate canister storage capacity.

In the nearly 20 years since adopting these test procedures, manufacturers have made great strides in developing designs and technologies to manage canister loading and purging and to reduce permeation emissions. Except as discussed below, we are not proposing to change the test procedures for demonstrating compliance with the proposed Tier 3 emission standards.

As described above, we are proposing to adopt a new standard based on measured values over a ''canister bleed test,'' which is intended to measure only fuel vapors which diffuse from the evaporative canister. CARB developed this procedure as a means of setting a standard that would not be affected by nonfuel background emissions. This procedure is a variation of the established two-day test sequence. The canister is preconditioned by purging and loading to breakthrough, then attached to an appropriate test vehicle for driving over the duty cycle for the exhaust test. The canister is then attached to a fuel tank for measurement. After a stabilization period, the tank and canister undergo two days of temperature cycling. Canister emissions are measured using a flame ionization detector (FID), either using a conventional SHED approach or by collecting emissions in a bag and measuring the mass. Rather than repeating CARB's regulations, we are proposing to incorporate those regulations by reference into the CFR. This will avoid the possibility of complications related to minor differences that may occur with separate test procedures.

CARB also adopted a fuel system ''rig test'' as an optional approach to demonstrate control of evaporative emissions without the effects of the nonfuel hydrocarbon emissions that are seen in testing the whole vehicle in the SHED. We generally expect manufacturers to comply with the proposed EPA requirements which include the canister bleed test and emission standard instead of CARB Option 1 which includes the rig test and emission standard. However, since we are proposing to accept CARB Option 1 certifications for the 2017 through 2019 model years, we are also proposing to incorporate by reference CARB's rig test into the CFR to accommodate those manufacturers that do in fact rely on this approach.

Also, as discussed further below, we are proposing to adopt a new leak test procedure which would be used to measure leak rates for the proposed leak emission standard. The leak test standard test procedure is contained in the proposed regulatory text. Further detail can be found in the draft Regulatory Impact Analysis (Appendix to Chapter 1).

Manufacturers have raised a pair of related concerns regarding the current test procedures. First, hybrid vehicles and new engine designs for meeting fuel economy standards and CO_2 emission standards increase the challenge of maintaining an adequate purge volume to prepare vehicles for the diurnal test. For hybrid vehicles this is related to the amount of time the engine is running. For other technologies this is related to the trend toward decreasing available vacuum in the intake manifold, which is the principal means of drawing purge air through the canister. Second, preconditioning the canister by loading to breakthrough serves as a disincentive for some control strategies that might otherwise be effective at reducing emissions, such as designs involving greater canister capacity or better containment of fuel vapors inside the fuel tank. In addition, we have learned from studying in-use emissions and in-

[291] 58 FR 16002 (March 24, 1993).

[292] SHED is the **Federal Register** acronym for sealed housing for evaporative determination. The SHED is the enclosure in which the evaporative emissions are captured before measurement.

[293] 59 FR 16262 (April 6, 1994).

use driving behaviors and usage patterns that it is not uncommon for vehicles to go for an extended period with little or no opportunity to purge the canister.

We request comment on an optional adjustment to the test procedure intended to address these three concerns. In this alternative, for designs involving pressurized tanks, manufacturers would determine an alternative vapor load to precondition the canister before the exhaust test. If, for example, a fuel system is designed to stay sealed up to 1 psi and to vent vapors to the canister if rising temperatures trigger a pressure-relief valve, the manufacturer could quantify the actual vapor load to the canister during three consecutive days of cycling through diurnal test temperatures. This three-day vapor load would be the amount of fuel vapor used to precondition the canister (loaded at the established rate of 15 grams per hour). This canister loading may also involve butane instead of fuel vapor, but we would likely require a greater mass of butane to account for the fact that it is easier to remove the butane from the activated carbon in the canister. This approach would be flexible to accommodate any design target for pressurizing fuel tanks. Canister preconditioning for the ORVR test (for integrated and nonintegrated systems) would remain unchanged.

b. Test Fuel

EPA is proposing to change the certification test fuel specifications as described in Section IV.D. Here we discuss some implications for evaporative and refueling emissions testing. We are proposing to revise the certification test fuel specification (including durability fuel) in conjunction with the proposed Tier 3 standards, principally to include ethanol and reduce sulfur such that the test fuel better aligns with the current and projected in-use fuel. Any Tier 3 evaporative emission certification would have to use Tier 3 certification test fuel and test procedures. This could be done as early as the 2015 MY and would be required for all vehicle models by the 2020 MY. We are further proposing to apply the new test fuel at the same time to ORVR testing. Therefore, beginning in the 2017 MY if manufacturers do any new testing to demonstrate compliance with the proposed Tier 3 evaporative emission standards, they would need to submit test data to demonstrate compliance with the refueling emission standards using the new certification test fuel as well as the leak (when applicable), refueling, canister bleed, and high altitude testing requirements and emission standards. We are also proposing that any family that is not yet captured within the Tier 3 phase-in percentage may remain on current certification fuel or, as discussed below, California certification test fuel and test procedures through the 2019 MY. By the 2020 MY all evaporative and refueling emission certifications would have to be on EPA test procedures and certification fuels. It is useful to clarify that any confirmatory or in-use testing for these families would be done on the fuel on which they were originally certified. However, by the 2020 MY all vehicles must be certified with Tier 3 certification test fuel and that test fuel would have to be used in confirmatory and in-use testing.

Finally, we are proposing that any vehicle certified to the refueling spit back standard separately (mostly incomplete HDGVs) may continue to do so using current certification fuel until the 2022 MY even if it's evaporative and/or refueling emissions are certified on Tier 3 certification fuel. This is reasonable since the fill quality of the vehicle and eliminating spit back are not necessarily related to the ethanol or sulfur content of the gasoline.

There are two main fuel properties that influence evaporative emissions: Ethanol content and vapor pressure. Current requirements specify an emission test fuel with no ethanol for emissions testing; however, the current regulation specifies that manufacturers must perform service accumulation (durability) using fuel with, at a minimum, the highest concentration of ethanol permissible under federal law for in-use gasoline and that is commercially available in at least one state. In this case, this provision has the effect of insuring that manufacturers would design their fuel systems to account for the effect of ethanol on permeation emissions. Even without ethanol in the test fuel, the extended operation with gasoline-ethanol blends for service accumulation would effectively force the manufacturers to design systems which effectively control emissions from the blended fuel. By regulation manufacturers must use a 10 percent ethanol fuel in current evaporative emissions durability work. As a result, adding ethanol to the test fuel for Tier 3 evaporative and refueling emission testing should pose no new or greater challenge for manufacturers. A second issue related to adding ethanol to the certification test fuel relates to the emission measurement in the SHED. Emissions are detected by flame ionization detectors (FID), which are less responsive to ethanol than gasoline. This effect causes under-reporting from the ethanol portion of the fuel vapor. Fuel-related emissions from the vehicle may be slightly more weighted toward ethanol than gasoline, depending on how the different fuel constituents permeate through various fuel-system materials, how they evaporate from the bulk fuel in the tank at varying temperatures, and how they adsorb onto and desorb from the activated carbon in the canister. We are proposing to address this issue by the use of a prescribed scaling factor. Under this approach manufacturers would simply multiply their SHED measurement results by a fixed value to adjust upward for the difference in the FID response to ethanol. Data available to EPA suggest that a scaling value of approximately 1.1 would be appropriate for E15.[294] This means that the value measured in the SHED would be multiplied by 1.10 to account for a difference in the FID response. This was determined using data which indicates that from a near worst case perspective the term within the bracket { } below equals 1.1.

$$M_{HC\ adj} = [(P_B V_n/T)\text{-}(.000297)(ppm_{Cfid})*\{1 + ((1 - r_a)(r_{eth}))/\ 1 + ((r_{eth})(r_a))\}]$$

This adjustment would apply to hot soak plus diurnal, refueling, canister bleed, and spitback emission standards testing. For higher ethanol blends (such as E85), the regulation already specifies measurement and calculation procedures to adjust for this effect. We are not proposing any changes to these procedures.

c. Vehicle Preconditioning for Nonfuel Hydrocarbon Emissions for the Tier 3 Evaporative Emission Standards

The proposed Tier 3 hot soak plus diurnal, leak, and canister bleed emission standards taken together are expected to bring about the widespread use of technology which effectively eliminates fuel vapor emissions. The canister bleed and leak emission standards are not influenced by non fuel hydrocarbon emissions from the vehicle. Nonfuel hydrocarbon emissions from the vehicle are measured as part of SHED emission testing, and are indistinguishable for fuel hydrocarbons when a FID is used to measure the concentration. The level of these nonfuel hydrocarbon emissions vary by vehicle and component design and material. These emissions arise from paint, adhesives, plastics, fuel/vapor lines, tires, and other rubber or polymer components and are generally greater

[294] Moulis, C. (2012, January). SHED FID Responses for Ethanol. Memorandum to the docket.

with larger size vehicles. These nonfuel hydrocarbon emissions are usually highest with newly manufactured vehicles and decrease relatively quickly over time.

Currently, manufacturers often conduct some preconditioning to reduce or eliminate the effects of these nonfuel hydrocarbon emissions on evaporative emissions measurements in the SHED. In the past, this practice has not been addressed through regulatory provisions. However, given the stringent level of the proposed Tier 3 hot soak plus diurnal evaporative emission standards, and that nonfuel hydrocarbon emissions are expected to be a significant portion of the hydrocarbon emissions measured in the SHED, EPA believes that some sort of preconditioning before certification testing is appropriate and that a regulatory provision addressing this practice may be warranted. Providing some recognition of and allowance for this practice would help to create the proper balance between necessary and proper preconditioning to address high nonfuel hydrocarbon emissions and excessive preconditioning which could undermine the intent of the proposed hot soak plus diurnal emission standard (~ 50 mg or less of fuel evaporative emissions). EPA believes the goal of evaporative emissions preconditioning should be to get nonfuel hydrocarbon emissions to what we call vehicle background levels. A working definition of vehicle background level might be the level which would occur naturally twelve months after production. A provision in the regulations which addresses preconditioning reduces ambiguity for the manufacturers and could reduce or eliminate any uncertainty in the true meaning of certification test results.

Manufacturer activity with regard to preconditioning often involves two practices. First, manufacturers in some cases ''bake'' their test vehicles at temperatures of 50 °C or higher for periods of up to ten or more days to accelerate the off-gassing of these nonfuel hydrocarbon emissions before testing is conducted. While this practice is common, there is no standardized method or protocol for this preconditioning prior to new vehicle certification testing. For example, some manufacturers bake for a set period of time in a climate chamber while others bake in the climate chamber and periodically measure nonfuel background in a SHED until an acceptable or stable level of nonfuel hydrocarbon emissions is achieved. Second, manufacturers often remove, modify, or clean certain components which are the largest source of nonfuel hydrocarbon emissions. Preconditioning could also include measures to eliminate minor fuel drips, spills, or other fuel remnants which occur as a result of vehicle preparation for testing.

We are not proposing to specify standardized preconditioning practices or protocols with regard to addressing nonfuel hydrocarbon emissions before evaporative emission certification testing. However, we are proposing general provisions in four areas. First, we would specify in the regulations that preconditioning for the purpose of addressing nonfuel hydrocarbon emissions is permitted. Second, we would specify that any preconditioning is voluntary. Third, we would specify that if preconditioning is conducted, the details must be specified to EPA before certification testing, (i.e., at the time of the pre-certification planning meeting). The goal of this preconditioning should be to get nonfuel hydrocarbon emissions to what we would term vehicle background levels as discussed above. The specifics to be discussed with EPA could include details on vehicle baking practices such the temperature and time duration in the climate chamber and practices conducted as an alternative or complement to vehicle baking such as installing used tires (drive and spare) on certification vehicles, and allowing the windshield washer tank to be filled only with water. In seeking to understand this issue, we ask for comment on which components are the largest sources of these nonfuel hydrocarbons and of these which are practical to modify or remove for the evaporative emissions test.

Fourth, as part of these considerations we would specifically propose that no preconditioning be permitted for testing of any vehicle aged more than twelve months from its date of manufacture. The only exception we would consider is the use of an aged spare tire in lieu of the spare tire on the test vehicle. For these vehicles, nonfuel hydrocarbon emissions would presumably be reduced to a stable level due to natural off gassing which begins after the vehicle is manufactured. Emissions from any replacement parts or other vehicle maintenance would presumably be encompassed within the margin below the standard created by this natural off-gassing. EPA asks comment on how to address testing of vehicles with relatively new drive tires and whether used drive tires should be allowed in these circumstances. Data available to EPA indicates that the background emission rate stabilizes to about two-thirds of the level of the standard after about twelve months. These levels are adequately below the proposed Tier 3 evaporative emission standards so that nonfuel background would not unduly influence test pass/fail outcomes and are within the range of values EPA expects to be accommodated within the proposed evaporative emission standard. This proposed restriction for vehicles older than 12 months would include certification, confirmatory and in-use testing for any vehicle certified to the proposed Tier 3 evaporative emission standards. We request manufacturer data related to the change in nonfuel hydrocarbon emission rates over time and on the best method to consider these emissions as part of preconditioning before evaporative emission testing.

d. Reciprocity With CARB

Over the past 15 years EPA's ''enhanced evap'' test procedures have been based on testing with 9 pound per square inch (psi) RVP gasoline with test temperatures representing a summer day with peak temperatures of about 96 °F. CARB adopted the same basic procedures, but specified that testing should occur with 7 psi RVP gasoline at temperatures of up to 105 °F. EPA and CARB agreed that certification could be based on testing with either EPA or CARB conditions and that these provided equivalent stringency for purposes of evaporative control system design. However, the provision allowing for this equivalence of test data preserved EPA's ability to also test with either EPA or CARB temperature conditions. CARB always specified EPA test conditions for refueling as they were deemed worst case. CARB recently moved to change their certification test fuel to a 7 RVP gasoline with 10 percent ethanol and as discussed in Section IV.D, we are now proposing to change the Federal certification test fuel specification to a 9 RVP gasoline with 15 percent ethanol.

During the development of this proposal we carefully considered the practice of CARB/EPA reciprocity with regard to certification test fuels, hot soak plus diurnal test procedures, and emission test results when it comes to evaporative emissions certification. With this notice we are proposing a revised approach to the CARB/EPA reciprocity with regard to evaporative and refueling emissions. A uniform national certification test fuel is important to the design of fuel/evaporative systems which will operate effectively across the U.S. Consistent with our desire to have a national program with vehicles designed for E15 as discussed in Section IV.D, and

consistent with our treatment of exhaust emission standards, we are proposing a 9 RVP test fuel with 15 percent ethanol for all evaporative (hot soak plus diurnal, canister bleed, and leak emission standards) and refueling emissions testing. Thus, after the evaporative emissions fuel phase-in discussed above (ending after the 2019 MY), EPA will no longer accept test data on CARB test fuel and diurnal test temperatures. However, CARB has agreed to accept emission test data on EPA test fuel and temperature conditions for certification such that a uniform national program could still exist. This approach applies to all evaporative and refueling emission standards.

Generally, any vehicle family counted in the Tier 3 evaporative emission standards phase-in must be certified on Tier 3 certification test fuel using EPA test procedures. However, EPA recognizes that the California and federal evaporative emission standard programs would be starting from different bases and that the transition provisions are different in some ways. For example, the proposed EPA program starts in the 2017 MY but after that has the same basic program construct as CARB in 2018. However, prior to the 2017 MY, CARB has a ZEV program provision which will continue to bring zero evap technology into the fleet before 2017. To capitalize on this technology and to facilitate transition, we are proposing that any CARB evaporative emission test data from MYs 2015 and 2016 certifications could be used in federal certification for those evaporative/refueling families through the 2019 MY. Assuming these vehicle families meet Tier 3 evaporative emission standards and they are sold nationwide they could be included in the percentage phase-in calculations as Tier 3 vehicles. A good example of these would be vehicles meeting CARB Option 1 standards discussed above. If the vehicles do not meet the Tier 3 evaporative emission requirements manufacturers could potentially sell them nationwide, but they would not be included as compliant vehicles in the percentage phase-in calculation. EPA proposes a similar provision for a manufacturer which elects to use the CARB test procedures and test fuels to meet the refueling emission standard. That is, if a manufacturer uses evaporative emission test data from 2015 or 2016 model year CARB certifications to meet the Federal requirements in 2017–2019 model years, it may also use CARB refueling emission test data from model year 2015 and 2016 certifications for federal certification for the refueling requirements for those evaporative/refueling families through the 2019 MY. Any in-use testing on vehicle families certified on this data would be conducted using the CARB temperature conditions and test fuel and the CARB ethanol SHED adjustment value of 1.08 for 10 percent ethanol. However, by the 2020 MY all vehicles would have to be certified using EPA certification test fuel and test procedures. In the interim, the equivalency and acceptance by EPA of certification on California test fuels is dependent on our proposed 9 psi RVP level for the certification test fuel. Were we to require the more stringent level of 10 psi RVP more typical of E10 as discussed in section IV.D.1, testing using California test fuels and conditions would no longer be equivalent.

e. Evaporative and Refueling Emission Standards for Various Fuels

The evaporative and refueling emission standards today apply in different ways to different fuels. In the case of gasoline, all the standards apply and testing is required for certifying all vehicles. Evaporative emission standards do not apply for diesel-fueled vehicles; the refueling standards apply to diesel-fueled vehicles, but manufacturers can get EPA approval to omit testing for certification. For other fuels, there is a mix of standards applying or not applying, and if standards apply, testing is either required or not required. The statutory provisions in this regard are straightforward: Clean Air Act section 202(k) specifies that gasoline-fueled vehicles must be certified to evaporative emission standards, and section 202(a)(6) specifies that all motor vehicles be certified to refueling emission standards. This raises two questions. First, we request comment on using this rulemaking as the proper context for applying the refueling standards to vehicles powered by every kind of fuel. Where standards do not apply today (natural gas, fuel cells, electric, etc.), we would expect to waive test requirements for certification, so this would not be any substantial burden. Dedicated ethanol-fueled vehicles would face a new requirement, but we are not aware that there are any such vehicles today.

Second, we have the discretion to apply evaporative emission standards to vehicles powered by fuels other than gasoline. The standards expressly do not apply for diesel fuel. By omission, the standards do not apply for dedicated ethanol-fueled vehicles, fuel-cell vehicles, and electric vehicles. The standards apply for natural gas and liquefied petroleum gas even though these are sealed systems with no emission control systems for controlling evaporative emissions. We request comment on adjusting the regulations such that evaporative emission standards apply only to volatile liquid fuels, which is the approach we have taken for nonroad applications (see, for example, 40 CFR 1060.801). Under this approach, diesel fuel would continue to be excluded from standards because it is nonvolatile. This approach would also exclude natural gas and liquefied petroleum gas because they are not liquid fuels at atmospheric pressure.

5. Improvements to In-Use Performance of Fuel Vapor Control Systems

a. Background on Data Related to In-Use Performance

As part of the Compliance Assistance Program (CAP 2000) in-use verification program (IUVP) [295] the manufacturers began testing the evaporative emissions performance of small samples of in-use vehicles owned and used by the public. These regulations can be found at 40 CFR 86 1845–01, and 1845–04. In 2000, EPA extended this requirement to cover chassis-certified HDVs, which for these purposes are basically all HDGVs up to 14,000 lbs GVWR.[296] The in-use testing for evaporative emissions started in 2004 for 2001 MY LDVs, LDTs, and MDPVs and in 2008 for 2007 MY chassis certified HDGVs. Current IUVP data for evaporative emissions covers about 1800 vehicle tests. This data shows that when evaluated in the laboratory using certification test procedures, the vast majority (over 95 percent) of the vehicles pass the evaporative emission standards to which they were certified. While this information is indicative of good in-use performance, it has limitations. First, the test results are for small sample sizes. For the approximately 150 million LDVs, LDTs, MDPVs, and chassis-certified HDGVs produced between 2001 (the start of the IUVP program) and 2010 (latest available data), only about 0.001 percent of vehicles were tested. Second, the IUVP regulations place limits on the age/mileage for vehicle testing. Each model year is tested in two ''batches,'' nominally at the one and four year age points. One year old vehicles must have at least 10,000 miles and four year old vehicles must have at least 50,000 miles with at least one within the higher mileage group having

[295] 64 FR 23906 (May 4, 1999).

[296] 65 FR 59922–59924 (October 6, 2000).

an odometer reading of at least 75 percent of useful life (90,000 miles for most Tier 2 vehicles). The useful life period for LDVs and LDT1s/LDT2s is 10 years/120,000 miles, for LDT3s/LDT4s/MDPVs and complete HDGVs it is 11 years/120,000 miles. Thus, few firm conclusions can be drawn about full useful life emissions performance.

Recent evaporative emission testing conducted by EPA and others evaluated in-use LDVs and LDTs certified to meet the enhanced evaporative emission standards implemented for 1996 and later model years [297] as well as Tier 2 standards implemented for 2004 and later model year vehicles. Three Coordinating Research Council (CRC) programs (E–77–2/2b/2c), tested evaporative emission levels of vehicles with varying amounts of ethanol and levels of RVP in the gasoline test fuel.[298] These programs were unique in that a subset of the vehicle SHED tests were of vehicles with implanted leaks at the nominal minimal level of detection for OBD systems (0.020 inch) in three different locations in the fuel/evaporative control system. These tests showed hydrocarbon emission rates 2–10 times greater than for the same vehicles tested in the SHED without the leaks and showed an order of magnitude of difference depending on where the leak was introduced.

Furthermore, the CRC E–77–2 evaporative emissions test programs which looked at permeation in aged vehicles meeting EPA's enhanced evaporative emission control standards, introduced a new Static Test Procedure which pressurized the vapor space and activated the fuel pump during different portions of the SHED test, while the vent from the vehicle canister was routed to a trap canister outside of the SHED. By pressurizing the vapor space it was possible to determine if there was a vapor leak in the system by looking for a slope change in the vapor concentration in the SHED over time relative to permeation alone. Similarly, by activating the fuel pump it was possible to determine if there was a liquid leak in the system by looking for a slope change in the vapor concentration in the SHED over time relative to permeation alone. Out of the 15 randomly recruited vehicles in the program, seven of them displayed vapor and/or liquid leaks on one or more fuel ethanol/RVP combination (4 of these 7 were Tier 2 vehicles). A closer look at the data indicates that over the course of the study, which covered a two to four year period depending on the vehicle, the magnitude of the leaks increased with time.

These studies taken together were of concern to EPA with regard to the in-use performance of evaporative emission control systems because they indicated that leaks could be a large portion of the evaporative emissions inventory if they occurred in even a relatively small fraction of the in-use fleet. The key missing piece of information was how often the leaks of 0.020 inches or larger occur in the fleet.

To help us better understand this concern, EPA partnered with the Colorado Department of Public Health and Environment (CDPHE) and with CRC as an advisor for a pilot field study in Denver in the summer of 2008 to assess the frequency of high evaporative emissions vehicles in the fleet. The project identified high evaporative emission emitters through an innovative screening tool known as a remote sensing device (RSD). The vehicles were identified at the entrance to the Inspection and Maintenance (I/M) station as high evaporative emission emitters. The operators of these vehicles were asked to participate in further evaluation using a Portable Sealed Housing for Evaporative Determination (PSHED) in addition to a modified California method test procedure to locate the source of the high emissions indicated by the PSHED level.[299] The CDPHE continued to collect the same type of data in different locations in the Denver area for the next two summers.

Of the 5,830 vehicles which came through the Ken Caryl I/M station in 2009, 601 were identified as potentially high evaporative emitters using the RSD tool.[300] Of these, 84 vehicle owners agreed to be included in the PSHED evaluation that summer. Furthermore, 110 additional vehicles were recruited which were potentially low to marginally high evaporative emitters.[301] The study was structured to recruit higher evaporative emitting vehicles more heavily than lower emitting vehicles. Afterwards the percentages were adjusted to represent the actual mix in the fleet of light duty vehicles. Thus, it was determined that 10 percent of the fleet had evaporative emissions which exceeded a cut point reflecting an in-use evaporative emission rate of about 1 gram of total HC over 15 minutes (see Table 5–9 in the 2012 DeFries report referenced above). This value is approximately the emission rate that would be expected from a leak of 0.020 inches which is the detection standard for OBD II systems.[302]

An examination of the test data reveals two additional significant points. First, the data indicates a trend for greater frequency of leaks in older vehicles. This is not unexpected given the manner in which factors such as vibration, fuel quality, weather elements, corrosion, maintenance, and other operating conditions affect the durability of system components, fittings, and connections over time. Second, there were relatively few newer model year vehicles in the population surveyed. This is expected and almost unavoidable since the Colorado I/M program generally exempts vehicles which are four years old or newer. While it is reasonable to expect there to be a lower prevalence of leaks in newer vehicles, the lack of data for newer vehicles does not necessarily indicate that no problems exist in newer model year vehicles or that problems will not occur in the future with Tier 3 vehicles.

Since many of the vehicles in the sample group met OBD requirements for evaporative system leak monitoring, it was deemed useful to examine whether the OBD system identified the leak. As mentioned above, approximately 10 percent of the vehicles in the ''adjusted fleet'' had vapor leaks which were of the magnitude expected from a 0.020 inch or larger leak. Over the three years of study, there were a total of 180 SHED tests (either PSHED or laboratory SHED) on vehicles with OBD data collected in the I/M program. Of these 180 vehicles, 171 had the evaporative OBD monitors ready. Of these, 171 vehicles, 20 were found to have emission rates of 1 g/15 min in the PSHED (the emission rate linked to a 0.020'' leak). Of these 20 vehicles only 3 came into the I/M test

[297] 58 FR 16002 (March 24, 1993).

[298] CRC E–77 reports: Haskew, H., Liberty, T. (2008). Vehicle Evaporative Emission Mechanisms: A Pilot Study, CRC Project E–77; Haskew, H., Liberty, T. (2010). Enhanced Evaporative Emission Vehicles (CRC E–77–2); Haskew, H., Liberty, T. (2010). Evaporative Emissions from In-Use Vehicles: Test Fleet Expansion (CRC E–77–2b); Haskew, H., Liberty, T. (2010). Study to Determine Evaporative Emission Breakdown, Including Permeation Effects and Diurnal Emissions Using E20 Fuels on Aging Enhanced Evaporative Emissions Certified Vehicles, CRC E–77–2c.

[299] DeFries, T., Lindner, J., Kishan, S., Palacios, C. (2011). Investigation of Techniques for High Evaporative Emissions Vehicle Detection: Denver Summer 2008 Pilot Study at Lipan Street Station.

[300] DeFries, T; Palacios, C., Kishan, S. (2012), Estimated Summer Hot Soak Distributions for the Denver's Ken Caryl I/M Station Fleet.

[301] A selection bin structure was used based on indicated evaporative emissions levels recruitment heavier at the higher emission end. Thus, there was a gradation even in the lower level bins where many of the vehicles would be considered marginal and not passing the evaporative emission standard even if they were not considered higher than the 1 g/15 minutes which our study found to be the lower range detectable by the RSD from the 2010 Ken Caryl report cited above.

[302] Compare the first 15 minutes of hot soak data from the field studies with implanted leaks in E–77–2 studies.

with an OBD diagnostic trouble code (DTC) set indicating an evaporative system problem.[303] [304] A closer look, including field inspection comments, of the 20 vehicles shows that half were not expected to diagnose the problem because it was outside of the OBD system design capabilities. Of the vehicles which potentially should have set an evaporative DTC, at least 50 percent and perhaps as much as 70 percent of codes were not set on high evap emissions vehicles. The lack of codes being set for these vehicles may reflect OBD performance issues or allowances (known as enable criteria) in the OBD regulations regarding when the OBD evaporative emission leak monitoring system is not required to operate or situations when the monitor is otherwise not ready for what may be allowable reasons such as an allowable deficiency.

To better understand this issue EPA has examined evaporative emission system DTC and monitor ready information from I/M programs from Texas and California.[305] Since the data was gathered by the states under different protocols and time periods, the content of the data sets are not identical. To provide some degree of uniformity in our analysis, we examined the data for five MY (2000–2004) but within each state we only looked at calendar years of data beginning after the initial state I/M exemption period (2–4 calendar years depending on the state) had passed. Thus the analysis focused on I/M OBD information for calendar years 2004–2010. Examined together, the data generally indicates the following:

- Depending on age, 0.3–2.5 percent of vehicles with evaporative monitors ready came into the I/M stations with evaporative related MIL or DTCs set.
- The percent of vehicles with evaporative emission related MILs set increased by a factor of 2–4 over about 5 years.
- Evaporative emission monitors were not ready for 3–16 percent of vehicles when arriving at the I/M station.
- The percent of vehicles with monitors ready at the I/M station generally decreased by 3 to 7 percentage points over about 5–6 years; decrease was less for model year vehicles less than five years old.
- While it varies by age, 60–80 percent of evaporative system DTCs are leak related.

There is no question of the value of OBD leak monitoring for evaporative systems, especially when owners complete needed repairs. Undoubtedly these percentages and thus in-use leak values would be higher without OBD evaporative system leak monitoring. However, this data suggests that EPA OBD regulations in place for 2000–2004 MY vehicles would not alone be sufficient to address concerns regarding the emission effects of vapor leaks from the fuel and evaporative control systems.[306]

In summary, information gathered from evaporative emissions testing conducted in the IUVP program indicates that relatively low mileage/newer vehicles perform well when evaluated under laboratory conditions. However, data gathered from in-use testing conducted by EPA, Colorado, and others indicates that as vehicles age some vehicles have a propensity to develop leaks in the fuel/evaporative system and that these leaks increase in size as the vehicles age. Beyond this, a review of OBD evaporative system leak monitor data from the I/M programs of two states revealed four important trends: (1) even when the OBD system identifies leaks owners do not always respond by getting the needed repair completed, (2) the fraction of vehicles with leaks identified by OBD increases as vehicles age, (3) vehicles sometimes are operating in conditions in which the OBD leak monitor is not ready to identify a potential problem, and (4) evaporative system leaks are the dominant DTC for vehicles with monitors ready and evaporative system DTC set.

The propensity for leaks in the vehicle fleet has the potential to reduce the benefits of the Tier 3 evaporative emission standards substantially. If on any given day, as few as five percent of Tier 3 vehicles had a leak(s) of 0.020 inches or greater this would cause in-use emissions equivalent to all of the projected emission reductions from the proposed Tier 3 evaporative emission standards on that day.[307] Thus, EPA is proposing three measures to address this issue: (1) An emission standard focused on reducing fuel/evaporative system vapor leaks over the vehicle useful life, (2) an upgrade to OBD emissions monitoring requirements to improve their role in identifying problems and improving in-use emissions performance, and (3) additions to the IUVP program focused on testing a broader sample of fuel/evaporative system leaks in IUVP than is done for evaporative emission standards alone.

b. Proposed Leak Emission Standard

The evaporative emission standards in this proposal will help to promote widespread use of improved technology and materials which will reduce evaporative emissions in-use. The proposed new requirement for a leak emission standard and procedure will help to ensure the durability of Tier 3 evaporative emission control systems nationwide.

Based on the information described above concerning evaporative emissions in-use, we believe a leak emission standard is necessary to meet our goal that vehicles meeting Tier 3 evaporative emission requirements not have fuel/evaporative system vapor leaks. Toward that end, we are proposing a leak emission standard that would have to be met both at new vehicle certification and in use. The leak emission standard would apply beginning in the 2018 MY to any vehicle certified to the Tier 3 evaporative emission standards or a CARB carryover vehicle counted toward the sales percentage phase-in requirements, including LDVs, LDTs, MDPVs, and complete HDGVs up to 14,000 lbs GVWR. The emission standard would be applicable for the same useful life period as for the evaporative emission standards that apply to the vehicle. The standard would apply to vehicles using volatile fuel (e.g., gasoline, FFV, and methanol

[303] In the E–77–2 programs the 0.02 inch leaks implanted near the top of the tank and at the canister connection had hot soak measurements which averaged approximately 1 g/15 minutes PSHED measurement. This also happens to be the lower end of the detectable range of evaporative emissions by the RSD. Since the OBD monitor is expected to detect a .020'' leak wherever it is located, the DTC should be set.

[304] Palacios, C., Weatherby, M., DeFries, T., Lindner, J., Kishan, S. (2012). Evaluation of the Effectiveness of On-Board Diagnostic (OBD) Systems in Identifying Fuel Vapor Losses from Light-Duty Vehicles.

[305] Fulper, C. (2013, February). Preliminary Analysis of OBD Evaporative System Information from I/M Stations—California and Texas, Memorandum to the docket.

[306] For further information see CARB reports ''Technical Status and Proposed Revisions to Malfunction and Diagnostic System Requirements for 1994 and Subsequent Model-Year Passenger Cars, Light-Duty Trucks, and Medium-Duty Vehicles and Engines (OBD II)'' October, 1994 and ''Technical Status and Revisions to Malfunction and Diagnostic System Requirements for 2004 and Subsequent Model Year Passenger Cars, Light-Duty Trucks, and Medium-Duty Vehicles and Engines (OBD II) March 2002.

[307] This is based on five percent of vehicles and 4–5 trips (hot soaks) per day at 1 g/hot soak. Five percent is a reasonable value for this illustration since as mentioned above 0.3–2.5 percent of vehicles come in to I/M stations with evaporative system MILs or DTCs and 60–80 percent of these were leak-related DTCs. Thus, it is reasonable to project that the fleet average is higher since vehicle repair just before I/M is common, evaporative emission monitors were not ready on 3–16 percent of vehicles, and 18 states do not have any form of I/M at all and repair rates in response to a MIL may be lower.

fuel vehicles, but not diesel or CNG vehicles).

To be compatible with CARB OBD requirements being met by most manufacturers and the OBD requirements included in this notice, we are proposing that the leak emission standard be expressed in the form of a cumulative equivalent orifice diameter. We are proposing a value of 0.02 inches.[308] The standard basically requires that the cumulative equivalent diameter of any orifices or ''leaks'' in the system not exceed 0.02 inches. This is consistent with California OBD requirements (and those being proposed in this rule as well) that the OBD system be capable of identifying leaks in the fuel/evaporative system of a cumulative equivalent diameter of 0.020 inches EPA believes an emission standard at this level is feasible since earlier testing programs identified vehicles with essentially no leaks and it is essentially equivalent to that required for CARB OBD evaporative system leak monitoring. As discussed in the technological feasibility section above, the actions manufacturers will have to take to meet the proposed Tier 3 evaporative emission standards are expected to do more to address potential leak points and thus in a broader sense to improve in-use durability for evaporative control systems compared to vehicles meeting earlier or current evaporative emission standards.

The proposed leak emission standard would provide added assurance that as the manufacturers design for ''zero evap'' standards they also design the systems to avoid leaks over the full useful life. We are proposing a leak emission standard of 0.02 inches which with rounding is a bit less stringent than the 0.020 inch OBD fuel/evaporative system leak monitoring requirement. EPA believes this level of precision is sufficient to accomplish the air quality objective and yet provides some compliance margin between the emission standard and the monitor requirement which is reflected through multipliers for the exhaust emission standards monitored through OBD. EPA asks for comment and rationale on setting the standard at 0.02 inches equivalent diameter or the more stringent 0.020 inch equivalent diameter specified for OBD evaporative system leak monitoring. If finalized as proposed, the emission standard would be specified to one significant digit (e.g., 0.02 inches) but would have to be measured and reported to at least two significant digits.

The proposed leak emission standard would apply at the time of certification as well as during confirmatory and in-use verification program testing. We do not expect that new vehicles being certified would have a leak problem, and since a vehicle with a leak would likely fail the evaporative emissions SHED test, there is little value in mandating a leak test at certification. Thus, EPA proposes to allow manufacturers to attest to compliance with the leak emission standard at certification.

To implement the proposed leak emission standard within the current regulatory structure a few minor changes are needed. First, current EPA regulations such as those at § 86.098–24, specify criteria for evaporative/refueling emission families. EPA believes this basic structure is appropriate for the leak emission standard, with the additional criteria that vehicles in the same evaporative/refueling family must use the same basic approach to OBD leak detection. Significantly different volume fuel tanks would likely also be a family determinant, but we believe this is already covered by the evaporative/refueling family criteria. Second, since the leak emission standard is a pass/fail requirement and not an emission rate, there is no requirement for the application of a deterioration factor. Third, EPA proposes to require that the manufacturers recommend one or more leak entry test points for each family. This point should be outside of the gas cap/fillpipe area, since our experience indicates that testing could always be done through that point of entry to the fuel/evaporative system.

EPA asks for comment on the timing, form and level of the proposed emission standard. EPA believes that linking the timing of the proposed leak emission standard to the implementation of proposed Tier 3 evaporative emission standards in 2018 provides adequate lead time and is consistent with the technical rationale supporting the feasibility of the Tier 3 evaporative emission standard.

c. Proposed Leak Emission Standard Test Procedure

In order to implement a new leak emission standard, a leak test procedure is required. The fundamental concepts underlying fuel/evaporative system leak test are not new to the manufacturers. There is already a simple leak check in 40 CFR 86.608–98(a)(xii)(A) and in the past at least three states included a fuel/evaporative system pressure leak test in I/M programs. More importantly, all LDVs, LDTs, MDPVs and HDGVs manufactured today have the onboard capability to run a pressure or vacuum leak based check on the vehicle's evaporative emission system as part of OBD evaporative system leak monitoring. These systems employ either positive or negative pressure leak detection pumps or operate based on natural vacuum for negative pressure leak detection. EPA is proposing a test based on a similar concept of placing the system under a slight positive pressure (but from an external source), measuring the flow needed to maintain that pressure in the fuel/evaporative control system, and converting that flow rate to an equivalent orifice diameter. With regards to the test procedure we will first discuss where the leak test could occur in the FTP test sequence. We will then discuss how the test is proposed to be conducted.

First with regard to when the test would be conducted within the current FTP sequence we are proposing that it be inserted immediately following the first two preconditioning steps within the FTP sequence (see Figure B96–10 in 40 CFR 86.130–96). Thus, the vehicle preconditioning steps for the leak test would be: (1) fill the vehicle fuel tank to 40 percent of capacity using the appropriate certification test fuel and then (2) let the vehicle soak for a minimum of a six hour period at a temperature in the range of 68–86 °F. EPA proposes that the test be conducted with 9 RVP E15 test fuel for both certification and IUVP. This is the same preconditioning that is called for today in 40 CFR part 86 subpart B for exhaust, evaporative, and refueling emissions testing. After preconditioning is complete, the leak test would be conducted and the test sequence could then proceed as prescribed in subpart B or testing terminated if the purpose was only to conduct leak testing. EPA believes this modest level of preconditioning is sufficient to create standard conditions which enable repeatable and reliable measurement results. Preconditioning could not include any prescreening for leaks nor would any tightening of fittings or connections be permitted.

After preconditioning is complete, manufacturers would then run the leak test. Each complete test would involve running the test procedure at one entry point in the system. Presumably this would be either near the back of the fuel system (perhaps near the gas cap) or near the front of the fuel system on the

[308] Current OBD regulations specify that if the fuel tank volume exceeds 25 gallons then the manufacturer may seek a larger leak detection orifice value. If a manufacturer seeks and is granted a larger value for OBD leak detection purposes, then that same numerical value becomes the leak emission standard value. We would not expect this value to exceed 0.040 inches.

pressure side of the locations near where the system is sealed (perhaps at the canister vent). If the fuel/evaporative system has an imbedded evaporative system test port then that point could be used. Alternatively, manufacturers could also develop a test rig such as a ''fill pipe extension'' which would screw into the fill pipe opening using cap threads at one end and on the other end have threads to screw the fill pipe vehicle cap in place. Within this extension there would be an access port for the leak test equipment to be attached. Thus, the full system could be tested without any direct intrusion or the need for a separate gas cap assessment. The manufacturer would have to specify the test point at the time of the pre-certification meeting. If the manufacturer selected an entry point which required the fuel cap to be removed, then the cap would have to undergo a separate test as is now done in many I/M stations.[309] In this case, tests from both points combined must pass the proposed emission standard.

The procedure would be conducted as follows:

- Calibrate the testing apparatus and otherwise verify testing apparatus is ready and able to complete the procedure
- Seal fuel system so as to pressure test entire system (purge valve, cap, etc.)
- Attach test apparatus to vehicle's fuel system at selected test point
- Pressurize fuel system with nitrogen or another inert gas to at least 2.4 kilopascals (kPa)
- Allow flow and pressure to stabilize in accordance with specification provided in the proposed regulatory text
- Calculate effective leak orifice diameter from measured output flow rate and temperature and pressure data or use apparatus with built in computer providing an equivalent digital readout. Calculate to the nearest 0.01 inch.
- Calculated effective orifice diameter must be less than or equal to the standard
- If leak test is conducted at the fuel cap then manufacturer must also show evidence that the vehicle's fuel cap is performing properly.[310]
- EPA is seeking comment on requiring two separate test points one near the evaporative canister and the other near the fuel cap. Furthermore, we are specifically proposing that in some cases two separate test points in the locations mentioned above would be required. This would especially be important if the fuel cap/fill neck area is isolated from the rest of the fuel/evaporative system as a result of the 40 percent fill or if dual tanks are not otherwise connected through vapor lines. Of course, dual tank, dual canister systems would have to be evaluated as separate systems. Tests could be void if the test apparatus fails, becomes disconnected, fails to maintain a stable flow rate or pressure, or the test was stopped before completion due to safety considerations or some other relevant vehicle issue.

The test procedure presented above is based on current fuel system designs. In the future, it is reasonable to expect changes in designs of the fuel systems such that the procedure above may need adjustment. EPA would, of course, monitor these fuel system changes and modify the test procedure provisions as needed. Furthermore, current EPA regulations (see § 1065.10(c)) contain provisions which provide the opportunity for manufacturers to seek approval for special or alternate test procedures if from a practical perspective their systems cannot be evaluated under EPA requirements or they have an approach deemed equivalent or better. EPA would make such provisions for the leak emission standard testing requirement. Any such special or alternative procedures would have to be reported under § 86.004–21(b)(9).[311]

d. Proposed Onboard Diagnostic (OBD) System Regulation Changes

EPA has its own OBD regulations which are similar but not identical to CARB's. EPA first adopted OBD requirements for 1994 and later model year LDVs and LDTs. While EPA has extended its requirements from LDVs and LDTs to larger and heavier vehicles,[312] EPA's last broad upgrade to its basic OBD regulation was in the 2005 timeframe. Since that time, CARB has adopted and the manufacturers have implemented a number of provisions to enhance the effectiveness of their OBD programs. These provisions include new requirements for OBD evaporative system leak detection as well as provisions to help insure that systems are built and operate as designed over their full useful life, give reliable results (find and signal only true deficiencies), and operate frequently during in use operation. It is permitted in current EPA regulations and common practice for the industry to certify their OBD systems with CARB and for EPA to accept CARB OBD certifications as satisfying EPA requirements. EPA is proposing to continue that practice but to upgrade our regulations to be consistent with the latest CARB regulations.

EPA has reviewed the current CARB regulatory requirements related to OBD (see California Code of Regulations (CCR) § 1968.2 dated May 18, 2010) and, as discussed below we are proposing to adopt most of these provisions with the Tier 3 program. We are proposing this for two basic reasons. First, this is consistent with the goal of a national program and one vehicle technology for all 50 states. Second, implementation of these requirements is now demonstrated technology and compliance with these requirements is common within the industry today. Thus, the added burden is minimal. Furthermore, OBD has the advantage of running frequently on in-use vehicles to identify potential exhaust and evaporative system performance problems, so adopting these provisions would create the opportunity for OBD to serve a more prominent role in ensuring the proposed Tier 3 emission standards are met in-use.

There is an important link between OBD provisions related to evaporative emission control system leak monitoring and the proposed leak test emission standard. They each provide an important incentive to design fuel/evaporative systems with fewer propensities to develop leaks in use but each addresses the issue from a different perspective. The distinction is that the proposed leak emission standards prohibits leaks of greater than 0.02 inches cumulative equivalent diameter, while the proposed OBD evaporative system leak monitoring provision would require that the OBD system find leaks larger than 0.020 inches cumulative equivalent orifice diameter and notify the owner, but with no inherent obligation to repair the problem. Thus adopting a 0.020 inch cumulative equivalent orifice diameter would align these two programs and, as will be discussed below, creates the potential for an optional leak detection test procedure for in-use testing.

To be more specific, we are proposing to update our OBD regulations to be

[309] For related information see ''IM240 & Evap Technical Guidance'', EPA 420–R–00–007, April, 2000.

[310] Such tests are done routinely in I/M stations using a commercially available apparatus. The gas cap leak rate may be determined by pressure loss measurement, direct flow measurement, or flow comparison methods and shall be compared to a pass/fail flow rate standard of 60 cubic centimeters per minute of air at 30 inches of water column. The flow rate methods are referenced to standard conditions of 70 °F and 1 atm.

[311] For example, MAHLE Powertrain has piece of equipment known as a Mahle Leak Tester which is now used in assembly plants and may be adaptable to this requirement.

[312] EPA's OBD regulations for LDVs, LDTs, and MDPVs, are found at 40 CFR 86.1806–05. EPA has also adopted OBD requirements for incompletes and heavier vehicles (greater than 14,000 lbs GVWR) (see 74 FR 8324, February 24, 2009 and 40 CFR 86.010–18).

consistent with current California OBD requirements add two new requirements and retain three minor exceptions. These changes would be fully effective in the 2017MY, but EPA asks comment on whether the requirement should be linked to be effective with certification to any of the Tier 3 emission standards (either exhaust or evaporative) or phased in for the 2017 model year for LDVs and LLDTs and the 2018 MY for the HLDTs, MDPVs, and HDGVs up to 14,000 lbs GVWR.[313] EPA would continue to accept certifications with CARB OBD requirements as satisfying EPA OBD requirements. We are proposing to incorporate by reference section 1968.2 of the California Code of Regulations as discussed below. This would include paragraphs (c) through (j) in their entirety. These paragraphs are entitled: (c) Definitions, (d) General requirements, (e) Monitoring requirements for gasoline/spark ignited engines, (f) Monitoring requirements for diesel/compression ignition engines, (g) Standardization requirements, (h) Monitoring system demonstration requirements for certification, (i) Certification documentation, (j) Production vehicle evaluation testing. The substance of many of these provisions is already contained in current EPA OBD requirements for LDVs, LDTs, MDPVs, and complete HDGVs less than 14,000 lbs GVWR.[314]

The most noteworthy changes we are proposing are summarized below. The CCR below is the California Code of Regulations cite for each pertinent provision.

• EPA proposes to add a 0.020 inches leak detection monitoring threshold upstream of the purge valve for all 4 vehicle categories LDV, LDT, MDPV, and complete HDGVs up to 14,000 lbs GVWR except for those with fuel tanks larger than 25 gallons capacity (see CCR 1968.2(e)). OBD leak monitoring systems would have to identify, store, and if required signal *any* leak(s) equal to or greater than 0.020 inches cumulative equivalent diameter. This would thus include diagnostic trouble codes (DTC) P0440, P0442, P0446, P0455, P0456, and P0457.

• EPA proposes to incorporate by reference the full array of rate based monitoring requirements (see CCR1968.2 (d)). Meeting the rate based monitoring requirements will help to insure that, even with enable criteria, the exhaust and evaporative system monitors run frequently enough that on average a problem would be identified and signaled to the owner in operation within two weeks. This will help to improve the fraction of time monitors are ready to find a potential problem.

• EPA proposes to incorporate by reference provisions regarding monitoring system demonstration requirements for certification. We are proposing to incorporate by reference CARB provisions in this area and to accept submissions to CARB for purposes of compliance demonstration (see CCR 1968.2(h)). Adopting current CARB monitoring system demonstration requirements assures that monitoring systems operate as designed when installed on certification vehicles.

We also propose that this certification include a requirement for manufacturers to demonstrate the ability of the OBD leak monitoring system to detect a 0.020 inch leak. Current CARB protocols do not require that manufacturers demonstrate that the certification vehicle can find a vapor leak in the fuel/evaporative system. We are proposing to add a requirement that manufacturers must demonstrate for certification that the OBD system can find and report the implanted leak would help to ensure the OBD system's capability to function as designed and for the OBD-based leak based evaporative system leak to be used as an optional test procedure for in-use testing for the proposed leak emission standard. We are proposing that this be added for the same vehicles now required for monitoring system demonstration requirements for certification under CARB OBD regulations. Since the CARB regulation requires only a relative few vehicle models each year per manufacturer, we propose that manufacturers be given the option to either test the remainder for an implanted leak in the fuel/evaporative system or certify by attestation that each of their remaining families meets the requirement based on development and other information.

• EPA proposes to incorporate by reference the CARB production vehicle evaluation data program. This program requires manufacturers to demonstrate that the OBD system functions as designed and certified when installed on production vehicles. (see CCR 1968.2(j))

• For the OBD evaporative system leak monitoring requirement, EPA proposes a scan readable function (a new PID in Service $01 of SAE J1979) which could be used to indicate or ascertain the distance traveled since the OBD leak monitoring diagnostic was last completed successfully and if the system passed or failed (identified any leak above 0.020 inches) during that monitoring event (unless it is otherwise already required in other OBD system modes). Updating this PID this would be based on SAE J1979 mode 6 ($06) test results: ''Request On-board Monitoring Test Results for Specific Monitored Systems.'' With this proposed requirement, the PID distance would be initialized to maximum range of NV RAM initialization (such as battery disconnect or controller reprogramming) and code clear. As a result, in the event that a vehicle had a memory clear event in the past, but has not had sufficient operation for the evaporative system to be evaluated, the scan readable mileage function would indicate that the system had not completed a full leak detection of the evaporative control system within the last 750 miles (1200km). OBD systems already maintain information for active, pending, historic and permanent codes. This would be a modest upgrade to this requirement which would enable the use of the OBD-based evaporative system leak monitor with the IUVP program as discussed below. See CCR 1968.2 (g) for information related to code storage. EPA seeks comment on alternative equivalent approaches (e.g., a scan readable mileage stamp or flag traceable to mileage indicating when the full OBD leak monitoring protocol was last completed successfully and the result (p/f)) which accomplish the same objective and whether this capability should be optional for the 2017 MY since this requirement is designed to enable the use of OBD in leak emission standard testing and that standard is proposed to begin in the 2018 MY.

• The minor exceptions which are contained in EPA's current OBD regulations are proposed to be continued. Compliance with 13 CCR 1968.2(d)(1.4), pertaining to tampering protection is not required. Also, the deficiency provisions of 13 CCR 1968.2(k) would not be adopted. In addition, demonstration of compliance with 13 CCR 1968.2(e)(15.2.1)(C), to the extent it applies to the verification of proper alignment between the camshaft and crankshaft, would apply only to vehicles equipped with variable valve timing. For all model years, the deficiency provisions of paragraph (i) of the current regulations apply only to alternative fuel vehicle/engine manufacturers selecting this paragraph for demonstrating compliance.

If adopted, these proposed changes, taken together would improve the performance, reliability, general utility, and effectiveness of OBD systems for Tier 3 exhaust and evaporative emission controls. Furthermore, if adopted, these

[313] We are not proposing to change the requirement for incompletes and vehicles with a GVWR above 14,000 lbs.

[314] MDVs in the CARB regulations basically incorporate MDPVs and complete HDGV less than 14,000 lbs GVWR as defined by EPA.

changes create the opportunity for OBD evaporative system leak monitoring systems to serve a more prominent role in ensuring compliance with the leak emission standard. EPA believes that they could be implemented for minimal cost since most manufacturers are meeting them today and will have to for LEV III vehicles. However, EPA requests comment on applying the proposed new OBD requirements to small business vehicle manufacturers and independent commercial importers.

As discussed below, the proposed OBD requirements would apply to small entities and independent commercial importers (ICI) in the 2022 MY. Small alternative fuel converters would still be able to meet the OBD requirements using the provisions of 40 CFR part 85 subpart F. Finally, it should be noted that as CARB updates its OBD regulations in the future EPA would consider these changes and propose to adopt them or incorporate them by reference, if appropriate. In fact, CARB is currently proposing some changes to its OBD program in response to the LEV III program exhaust emission standards.[315] We request comment on incorporating these changes into this rule or other rules in the future. We also would generally expect to continue the current practice allowed by EPA regulations which is for EPA to accept CARB OBD certifications as satisfying EPA requirements provided that they include at least all of the requirements covered by the EPA regulations.

e. In-Use Verification Program (IUVP) Requirements for the Leak Emission Standard

i. Introduction

We believe it is important to identify leaks since vehicles with leaks would be expected to have daily emission rates above the proposed Tier 3 evaporative emissions standards and the Colorado data suggests a propensity for the diameter of vehicle leak orifice to get larger over time and thus to have even higher emissions. This is also important because evaporative leak emissions occur virtually every day whether the vehicle is driven or not. Thus identifying potential leak problems will be important to capturing the emission benefits of the proposed evaporative emission requirements.

Toward that end, EPA is proposing to include assessment of compliance with the leak emission standard within the IUVP program. We considered expanding the evaporative emission testing portion of the IUVP program as a means to assess leaks, but we decided to focus on the leak emission standard because it is less burdensome and is cost effective for accomplishing the objective. EPA believes adding a leak test requirement does not create an unreasonable burden. The draft test procedure described above is simple to run, inexpensive to conduct in terms of equipment and labor, and can be completed relatively quickly compared to an evaporative emissions test. However, we are retaining the evaporative emissions testing requirements currently in IUVP to monitor broader evaporative control system effectiveness (e.g., purge, canister control efficiency, permeation).

ii. IUVP Test Requirements

We are proposing that the leak emission test be conducted for each and every vehicle assessed in IUVP for exhaust emissions under 40 CFR 86.1845.04. This would begin for 2018 MY certifications for vehicle families meeting the proposed new leak emission standard. This would include the low and high mileage tests for any exhaust vehicle evaluated for exhaust emissions plus a requirement that there be at least one representative of each evaporative/refueling/leak family evaluated at each year point. We are proposing this approach to implementing IUVP for the leak emission standard in lieu of creating a new set of requirements which would require yet another set of vehicles to be procured for testing. We are not proposing to include the leak test with any evaporative emissions test in IUVP, since a leak would be evident in the results of the evaporative emissions test.

The current IUVP regulations at § 86.1845–04, Table S04–07, call for test sample sizes on a sliding scale based on annual vehicle sales by test group. This can vary from zero for very small sales test groups to six vehicles for test groups with sales exceeding 250,000. There are more exhaust emission test groups than there are evaporative/refueling/leak test families and exhaust emission test groups may cover one or more of the same evaporative/refueling/leak families, so we would expect to receive multiple leak emission test results for most evaporative/refueling/leak families. This will expand the amount of IUVP data we receive in this important area and improve our ability to assess the overall leak performance for a given evaporative/refueling/leak family and the fleet as a whole.

As discussed above, EPA believes that the fuel and evaporative control system leaks are heavily influenced by age as well as design and other factors. EPA would consider extending the age point for leak emission testing for IUVP beyond the four year point to better assess this effect. However, in the past, manufacturers have expressed concern about the implications of testing older vehicles and about finding vehicles still within their warranty and recall liability periods. EPA asks comment on the viability of extending leak emission IUVP testing beyond the nominal four year point (e.g., six to eight years). We recognize that there are cost and vehicle procurement issues, but the Colorado data strongly suggests a relationship between vehicle age and the propensity for the development of leaks.

iii. Assessment of IUVP Leak Emission Standard Test Results

The current regulations contain provisions addressing follow-on testing requirements for exhaust emissions for vehicles which fail to meet various performance thresholds within IUVP (see 40 CFR 86.1846–01). As mentioned above, we expect that it will be common to get more than one leak emission test result over the course of each model year's mileage testing point for each evaporative/refueling/leak family as a result of the requirement to assess leaks with each exhaust IUVP test. However, the proposed leak emission standard is basically pass/fail at 0.02 inches and it is difficult to establish a threshold criteria for a pass/fail standard such as has been done for exhaust emissions where there is a multiplier applied to the level of the individual exhaust emission standard.

Given the importance of the leak emission standard in assuring in-use evaporative emissions control, we are proposing a set of criteria for assessing leak emission standard results from IUVP. These criteria can be summarized as follows for each low and high mileage test point for each model year tested:

- If 50 percent or more of all vehicles evaluated in an evaporative/refueling/leak emission family for any given model year pass the leak emission standard, testing is complete. This applies to cumulative testing for that family throughout the model year for that mileage group. This is consistent with the exhaust emission requirements for IUVP and EPA believes it is reasonable since vehicles are tested in the ''as received'' condition from consumers.

[315] CARB has recently proposed some minor OBD program modifications in their recent LEVIII ISOR, and EPA asks for comment on including those provisions within the proposed EPA OBD program. See pages 61–72 of the CARB Staff Report at *http://www.arb.ca.gov/regact/2012/leviiighg2012/levisor.pdf* and pages A11–A125 of the regulatory text at *http://www.arb.ca.gov/regact/2012/leviiighg2012/levappa.pdf*.

• If only one representative of the evaporative/refueling/leak family is tested in a mileage group for that model year's vehicles and it passes the leak emission standard testing is complete. If that vehicle does not pass the leak emission standard a manufacturer may test an additional vehicle to achieve the 50 percent rate.

• If an evaporative/refueling/leak emission family fails to achieve the 50 percent rate, it is presumed that the family will enter into In-Use Confirmatory Testing Program (IUCP).

Before IUCP begins, the manufacturer may ask for engineering analysis discussions with EPA to evaluate and understand the technical reasons for the testing outcomes and the implications for the broader fleet. Technical information for these discussions could include but would not be limited to detailed system design, calibration, and operating information, technical explanations as to why the individual vehicles tested failed the leak emission standard, and comparisons to other similar families from the same manufacturer. Relevant information from the manufacturer such as data or other information on owner complaints, technical service bulletins, service campaigns, special policy warranty programs, warranty repair data, state I/M data, and data available from other manufacturer specific programs or initiatives could help inform understanding of implications for the broader fleet. As part of this process a manufacturer could elect to provide evaporative emissions SHED test data on the individual vehicle(s) that did not pass the leak emission standard during IUVP. With an adequate technical basis, the outcome of this engineering analysis discussion could result in an EPA decision not to require IUCP testing.

We would propose to operate within the basic structure of the IUCP program in the current regulations. Prior to commencing IUCP testing the manufacturer, after consultation with EPA submits a written plan describing the details of the vehicle procurement, maintenance, and testing procedures. This plan could include inclusion of a hot soak plus diurnal SHED test to supplement leak emission test results. We propose that EPA must approve this plan before testing begins. As prescribed now in the IUCP regulations for exhaust, if five vehicles were tested and all passed the leak emission standard then testing would be complete. If all five vehicles did not pass, then five more would be tested. More vehicles could be tested at the manufacturer's discretion but all testing would have to be completed within the time period specified in the regulations today. EPA and the manufacturer would then enter into discussions regarding interpretation, technical understanding, and compliance/enforcement implications of the test results, if any.

iv. Proposed Optional Test Procedure Approach for IUVP/IUCP

Assuming implementation of the OBD regulation changes proposed in Section IV.C.5.d, above, EPA is proposing an optional approach to a portion of the leak emission test procedure discussed in Section IV.C.5.c. This optional testing approach would be included in the proposed IUVP/IUCP testing program for the leak emission standard, but would not be used for certification testing for the leak emission standard. It would be considered an approach which could be used by the manufacturers to assess compliance with the leak emission standard. EPA could also use this procedure for conducting assessments and asks for comment on using this procedure for compliance purposes with a 0.02 inch cumulative equivalent diameter orifice standard.

Under this optional approach manufacturers would be able to rely upon the operation of their OBD evaporative system leak detection hardware and operating protocols in lieu of running the stand alone in-use leak test to check for the presence of a 0.02 inch leak in the fuel/evaporative system. This approach relies on the leak emission standard equivalent orifice diameter being established at the same level as proposed for OBD (0.020 inches). Thus, the IUVP/IUCP protocol would be modified and simplified to expedite completion of testing and reduce costs.

Quite simply, if a vehicle is brought in for IUVP or IUCP testing and a scan tool query of the onboard computer indicates that the vehicle had successfully completed a full OBD-based evaporative system leak monitoring check within the last 750 miles and no evaporative system leak problems for any diameter above 0.020 inches was indicated (diagnostic trouble codes P0440, P0442, P0446, P0455, P0456, and P0457), the vehicle would be been deemed to have met and passed the leak emission standard test requirement. However, if the system had not successfully completed a full OBD-based evaporative system leak check within 750 miles with no problem indicated then the manufacturer would have the option to run its OBD-based evaporative system leak check in the laboratory after prescribed preconditioning. This OBD-based approach is sometimes used in auto manufacturer dealerships and repair facilities to diagnose and fix evaporative system leaks found by the OBD system. If the vehicle completes the full OBD-based leak test in the laboratory then the vehicle's pass/fail results for the 0.02 inch cumulative equivalent diameter orifice would be based on the OBD test result. This optional protocol could apply to every leak emission standard test after certification unless not approved by EPA for IUCP under 40 CFR 1846.01(i). Replicate tests would not be required or allowed but void tests could be repeated.

Furthermore, EPA proposes to allow the manufacturer to run the stand alone EPA leak test in several situations. First, manufacturers could conduct the stand alone test to confirm that a problem identified by the OBD-based evaporative system monitoring leak check was a leak and not a problem with the OBD leak monitor itself. Second, a manufacturer could run the stand alone EPA leak test to confirm that the leak value identified by the OBD system was truly above the level of the proposed leak emission standard. Third, it could be used for vehicles which had not successfully completed a full OBD-based evaporative system leak monitoring check within the last 750 miles. Fourth, it could be used to confirm that a DTC set within the last 750 miles actually indicated the presence of a leak(s) greater than the proposed standard. However, if a manufacturer elected to use only OBD-based evaporative system leak based monitoring in its IUVP testing; these results would be the basis for decisions regarding IUCP. As is required in the current IUVP regulations, all test data whether OBD based or based on EPA's stand alone test procedure would have to be reported to EPA.

There could be some advantages to this option since it employs a pressure/vacuum approach manufacturers understand and creates positive/negative pressures manufacturers have accommodated within their fuel/evaporative system. One potential downside is that under current designs vehicle engines would have to be operating to create the pressure or vacuum and because the engine is operating this would require the OBD-based leak test to be stand alone after the preconditioning sequence is complete. This would be more challenging for natural vacuum leak detection systems unless extended driving was involved to create the fuel system heat needed for a natural vacuum event or this was done through a climate chamber or SHED based diurnal heat build.

Allowing for this approach raises at least two implementation questions. The first is related to the value of conducting the OBD-based test for a vehicle with an active or pending leak DTC already set in the computer and/or an MIL indicated. In this case, EPA would permit the manufacturer to run the OBD-based leak test and/or the stand alone EPA leak test or concede that the vehicle would not pass the leak emission standard and count the result. Second is the question of gas caps. This is among the most common codes found in OBD records and is often related to operator error such as not tightening the gas cap properly. Codes of this nature have no value in this leak emission assessment, so a manufacturer would be permitted to correct the problem before testing and clear this OBD code before testing or run the stand alone EPA leak test.

6. Other Initiatives

This proposal includes consideration of several amendments or clarifications to existing requirements related to evaporative emissions. As part of this process, the following provisions warrant adjustment, clarification, or correction:

• Even though the evaporative emission standards in 40 CFR part 86 apply to the same engines and vehicles that must meet exhaust emission standards, we require a separate certificate for complying with evaporative and refueling emission standards. An important related point to note is that the evaporative and refueling emission standards always apply to the vehicle, while the exhaust emission standards may apply to either the engine or the vehicle. Since we plan to apply evaporative/refueling/leak emission standards and the recently adopted greenhouse gas standards to vehicle manufacturers, we believe it would be advantageous to have the regulations related to their certification requirements written together as much as possible to reduce burden and increase efficiency. We are therefore proposing to move the emission standards and certification requirements from 40 CFR part 86 to the new 40 CFR part 1037, which was originally used for greenhouse gas standards for heavy-duty highway vehicles. This is not intended to change the requirements that apply to these vehicles, except as noted in this section. We propose to make the provisions in part 1037 effective with model year 2014.

• As described in Section VI.C.3, we are proposing to allow for certifying vehicles above 14,000 lbs GVWR based on an engineering analysis instead of new testing (as is currently allowed for vehicles at or above 26,000 lbs GVWR). We are also proposing to clarify the provisions describing how the certification process plays out for these vehicles.

• Section 86.1810–01 contains specifications addressing whether diesel fuel vehicles can be waived from demonstrating compliance with the refueling emission standard through testing. In the current regulation the potential for a waiver from testing depends on the diesel fuel having an RVP equal to or less than 1 psi and the fuel tank having a temperature which does not exceed 130 °F. We have examined this provision and are proposing to withdraw the fuel temperature limit specification. Short of fuel spillage in the SHED, EPA sees no likelihood that a diesel fueled vehicle with RVP less than 1 psi could fail the refueling emission standard even at fuel tank temperatures above 130 °F. This is due to the inherently low vapor pressure of diesel at these temperatures and the likelihood that vapor shrinkage conditions will occur in the fuel tank during refueling since the dispensed fuel will be cooler than the tank fuel.

• When adopting the most recent evaporative emission change we did not carry through the changes to the regulatory text applying evaporative emission standards for methanol-fueled compression-ignition engines. The proposed regulations correct this oversight.

• We are proposing provisions to address which standards apply when an auxiliary (nonroad) engine is installed in a motor vehicle, which is currently not directly addressed in the highway regulation. The proposed approach would require testing complete vehicles with any auxiliary engines (and the corresponding fuel-system components). Incomplete vehicles would be tested without the auxiliary engines, but any such engines and the corresponding fuel-system components would need to meet the standards that apply under our nonroad program as specified in 40 CFR part 1060.

• We are proposing to remove the option for secondary vehicle manufacturers to use a larger fuel tank capacity than is specified by the certifying manufacturer without re-certifying the vehicle. Secondary vehicle manufacturers needing a greater fuel tank capacity would need to either work with the certifying manufacturer to include the larger tank, or go through the effort to re-certify the vehicle itself. Our understanding is that this provision has not been used and would be better handled as part of certification rather than managing a separate process. We are proposing corresponding changes to the emission control information label.

• Since we adopted evaporative emission standards for gaseous-fuel vehicles, we have developed new approaches for design-based certification (see, for example, 40 CFR 1060.240). We request comment on changing the requirements related to certifying gaseous-fuel vehicles to design-based certification. This would allow for a simpler assessment for certifying these vehicles without changing the standards that apply.

• With regard to OBD, we note also that under § 86.1806–01(b)(4) OBD systems must have the ability to detect absence of purge air flow from a complete evaporative emission control system. This is clearly important because the proper operation of an integrated evaporative/refueling emission control system depends on purge. Similarly, evaporative/refueling system operation depends on the presence, proper adsorption/desorption performance, and sustained working capacity of the activated carbon canister. It is thus curious to observe that the current OBD provisions do not directly address the activated carbon canister in any way. The absence of the canister would likely be noted as a gross leak and/or a problem with purge. Nonetheless, we are seeking comment on a provision which would require the OBD system to sense for evidence of ongoing adsorption and desorption of hydrocarbon vapors. These could both be sensed by changes in canister carbon bed temperature or perhaps for the presence of vapor in the fuel going to the intake manifold after a cold start or refueling event. In some cases, EPA believes these parameters could be monitored by hardware and sensors now on most vehicles and thus this might be primarily an OBD software change. Similarly, we are seeking comment on whether the operation of a vacuum pump or similar device used to assist or supplement vehicle engine vacuum purge or any device otherwise used to enhance or control purge flows, rates, or schedules should be required to be monitored as part of OBD.

• With future technology, we anticipate a trend toward the implementation of fuel tanks with higher operating pressures and in some cases fuel tanks which are sealed to the atmosphere during normal operation. Data available to EPA indicates that a leak in such a system will result in substantial emissions relative to very low pressure systems which employ running loss control strategies and an activated carbon canister as part of the

methodology to control vapor emissions.[316] Based on this concern, we are seeking comment on the feasibility and cost of requiring the OBD leak detection monitoring system to detect and signal the presence of a smaller diameter orifice than proposed for non-pressurized systems (~ 0.010 inch) upstream of the purge valve for all 4 vehicle categories LDV, LDT, MDPV, and complete HDGVs up to 14,000 lbs GVWR. This would apply to any vehicle with a designed in-use operating pressure in excess of 0.36 psi (10 inches water). As a means to prevent a sealed fuel tank from venting leaks directly to atmosphere, we ask for comment on an added requirement that the fuel vapor vent valve be set to the open position at key off (and vent to the canister) if the OBD system detected a leak and triggered an MIL related to any leak greater than a pre-established threshold. The vent open at key off concept for pressurized fuel systems would not be intended to disenable the OBD system from conducting its normal evaporative system check during operation. Furthermore, as discussed above, we are proposing a 0.020″ leak detection threshold for all systems. However, we are asking for comment on setting the threshold in the 0.010″–0.015″ range for pressurized systems. In the context of this request for comment, we ask for input regarding the feasibility of the smaller threshold, the effects of the vent valve open requirement on ORVR, and the repairability of leaks of less than 0.020″.

D. Emissions Test Fuel

1. Proposed Changes to Gasoline Emissions Test Fuel

In-use gasoline has changed considerably since EPA's fuel specifications for emissions testing of light- and heavy-duty gasoline vehicles were first set and last revised. Gasoline sulfur and benzene have been reduced and, perhaps most importantly, gasoline containing 10 percent ethanol by volume (E10) has replaced clear gasoline (E0) across the country. This has had second-order effects on other gasoline properties. In-use fuel is projected to continue to change with the implementation of the RFS2 program (e.g., the expansion of the number of retailers that offer E15) as well as today's proposed Tier 3 gasoline sulfur program. As a result, we are proposing to update our federal emission test fuel specifications not only to better match today's in-use fuel but also to be forward looking with respect to future ethanol and sulfur content.[317] The revised test fuel specifications would apply for exhaust emissions testing, fuel economy/greenhouse gas testing, and emissions testing for non-exhaust emissions (evaporative, refueling, and leak detection testing). The proposed gasoline specifications, found at § 1065.710, would apply to emissions testing of light-duty cars and trucks as well as heavy-duty gasoline vehicles certified on the chassis test, those subject to the proposed Tier 3 standards.[318]

We are not proposing changes to the exhaust or evaporative durability fuel requirements outlined in the provisions of § 86.113–04(a)(3), except to remove the minimum sulfur content (15 ppm) currently specified at § 86.113–04(a)(3)(i). Those provisions require that ''Unless otherwise approved by the Administrator, unleaded gasoline representative of commercial gasoline that will be generally available through retail outlets must be used in service accumulation.'' We would expect that manufacturers would use service accumulation fuels which are generally representative of the national average in-use fuels (or worst case for durability) during the model year which is being certified, including, for example, the ethanol content (for exhaust emissions), sulfur level, and fuel additive package. For exhaust emission bench aging durability programs as allowed under the provisions of § 86.1823–08(d) and (e), the bench aging program should be designed using good engineering judgment to account for the effects of in-use fuels on exhaust emissions, including the effects of future in-use fuels on catalytic converters, oxygen sensors, fuel injectors, and other emission-related components.

For evaporative emissions, durability fuel requirements are the same as for exhaust emissions (as outlined above), plus an additional requirement in the provisions of § 86.1824–08(f), that the service accumulation fuel ''contains ethanol in, at least, the highest concentration permissible in gasoline under federal law and that is commercially available in any state in the United States. Unless otherwise approved by the Administrator, the manufacturer must determine the appropriate ethanol concentration by selecting the highest legal concentration commercially available during the calendar year before the one in which the manufacturer begins its mileage accumulation.'' Thus, as E15 in-use fuel becomes progressively more available, we would expect that E15 service accumulation fuel would be used for whole vehicle evaporative durability programs. Similarly, evaporative bench aging durability programs allowed under the provisions of § 86.1824–08(d) and (e), should be designed using good engineering judgment to account for the durability effects of in-use fuels on evaporative emissions, bleed emissions, and leakage emissions.

Where possible, we are proposing changes consistent with the CARB's planned LEV III gasoline test fuel specifications.[319] Below is an overview of some of the key changes. A summary of the proposed test fuel specifications is provided in Table IV–21. For more information on how we arrived at the proposed test fuel property ranges and ASTM test methods, refer to Chapter 3 of the draft RIA.

• *Ethanol*—adding a 15 volume percent ethanol specification to be forward-looking with respect to the maximum gasoline ethanol concentration Tier 3 vehicles could expect to encounter. EPA recently issued a waiver under section 211(f)(4) of the CAA permitting E15 to be

[316] Passavant, G. (February 2013). Presentation on Evaporative Emission System Leaks for a Fuel Tank Under Pressure. Memorandum to the docket.

[317] EPA's motor vehicle emissions standards typically require a level of performance over a specified test procedure, with emissions measured while the engine or the vehicle is operated using the specified test fuel and operated in a specified manner. The test fuel specifications typically apply for all emissions testing used to determine compliance with the standard, including emissions testing to obtain a certificate of conformity, as well as compliance testing for newly produced or in-use engines or vehicles. While this test fuel is commonly referred to as ''certification fuel,'' the test fuel specifications proposed today are not limited to certification related emissions testing, but also apply to compliance related emissions testing after the certificate of conformity has been issued. The certification process also typically involves a process to ensure that the emissions controls system is durable over the regulatory useful life of the vehicle or engine. This can involve long-term or accelerated aging of a vehicle or engine prior to emissions testing. The fuel used for such aging is commonly referred to as service accumulation or durability fuel, and in many cases is specified as commercial gasoline that will be generally available through retail outlets (§ 86.113–04(a)(3)), or in some cases may be specified as gasoline which contains ethanol in, at least, the highest concentration permissible in gasoline under federal law and that is commercially available in any state in the United States, such as for durability aging of evaporative emissions system (§ 86.1824–08(f)). EPA is not proposing changes to the specifications for fuel used during durability related aging that is part of the certification process. The proposed changes only apply to the test fuel used during emissions testing, both for purposes of certification and for later compliance related testing.

[318] As discussed in Section IV.C, we are also seeking comment on requiring the proposed Tier 3 test fuel in conducting exhaust, evaporative, and refueling emissions testing of heavy-duty gasoline engines certified on an engine dynamometer. These could include engines installed in incomplete Class 2b and Class 3 vehicles and engines used in vehicles above 14,000 lb GVWR.

[319] The LEV III program as approved by the California Air Resources Board, January 2012.

introduced into commerce for use in MY2001 and newer light-duty motor vehicles.[320] While E15 is only commercially available at a limited number of fuel retailers, EPA believes it could become a major gasoline blend over the next 10–15 years given instability in crude oil pricing and growing RFS2 renewable fuel requirements. The use of E15 as the emission test fuel will help ensure that all future vehicles are capable of meeting Tier 3 emission standards while operating on E15.

• *Octane*—lowering gasoline octane to around 87 (R+M)/2 to be representative of in-use fuel, i.e., regular-grade gasoline. Manufacturers could continue to use high-octane gasoline for testing of premium-required[321] vehicles and engines as well as for testing unrelated to exhaust emissions. Historically, the high octane rating of test fuel has not had any real emissions implications. However, as manufacturers begin introducing new advanced vehicle technologies (e.g., turbocharged downsized), this may no longer be the case. For those vehicles where operation on high-octane gasoline is required by the manufacturer, we would allow the manufacturer to test on a fuel with a minimum octane rating of 91 (R+M)/2 (in lieu of the proposed 87 (R+M)/2 general test fuel). According to the proposed regulations found at § 1065.710(d), vehicles or engines are considered to require premium fuel if they are designed specifically for operation on high-octane fuel and the manufacturer requires the use of premium gasoline as part of their warranty as indicated in the owner's manual. Cases where premium gasoline is not required but is recommended to improve performance would not qualify as a vehicle or engine that requires the use of premium fuel. For qualifying vehicles and engines, all emission tests must use the specified high-octane fuel. For vehicles and engines certified on high-octane gasoline, all EPA confirmatory and in-use testing would also be conducted on high-octane gasoline. All other test fuel specifications would be the same as those proposed in Table IV–21. We seek comment on the need for limiting the maximum octane of gasoline used in the certification of premium-required engines and vehicles.

• *Distillation Temperatures*—adjusting gasoline distillation temperatures to better reflect today's in-use gasoline/E10. This includes minor T10, T90 and FBP adjustments based on AAM in-use fuel surveys and refinery batch test data, with additional adjustments to reflect future E15 performance (significantly lower T50 range). We seek comment on the appropriateness of the proposed distillation temperatures including the proposed 170–190 °F T50 range for an E15 fuel. For more information on how we arrived at the proposed distillation temperatures in Table IV–21, refer to Chapter 3 of the draft RIA.

• *Sulfur*—lowering the sulfur content of test fuel to 8–11 ppm to be consistent with our proposed Tier 3 gasoline sulfur standards. The proposed 10-ppm annual average sulfur standard is expected to result in two-thirds less sulfur nationwide so it is appropriate to lower the gasoline test fuel specification in concert.

• *Benzene*—setting a benzene test fuel specification of 0.6–0.8 volume percent to represent in-use fuel under our new MSAT2 regulations.[322] The MSAT2 standards, which took effect January 1, 2011, limit the gasoline pool to 0.62 volume percent benzene on average. Beginning July 1, 2012, no refinery may produce gasoline above 1.3 volume percent benzene on average.

• *Total Aromatics*—lowering the aromatics content of test fuel to better match today's in-use gasoline/E10 and accommodate E15. According to AAM fuel surveys, the average aromatics content in gasoline has dropped 16 percent over the past decade due to ethanol blending.[323] Additional ethanol blending to produce E15 is expected to result in even greater aromatics reductions. Accordingly, we believe the proposed 19.5–24.5 volume percent test fuel specification is appropriate.

• *Distribution of Aromatics*—in addition to total aromatics and benzene, we are proposing regulations that would require a distribution of aromatics (i.e., a certain amount of C7, C8, C9, and C10+ hydrocarbons) to ensure that test fuel is more representative of in-use gasoline. Heavier aromatics in gasoline are believed to contribute to vehicle PM emissions, so it is important that vehicles are designed to meet the proposed Tier 3 emission standards on fuel with a distribution of aromatic compounds representative of in-use gasoline. We also seek comment on the need for a multi-substituted alkyl aromatics (MSAA) specification, as has been proposed by CARB. For more information on our proposed aromatics specifications, refer to Chapter 3 of the draft RIA.

• *Olefins*—adjusting the olefins specification to better match today's in-use gasoline/E10 according to AAM fuel surveys. Not only is the proposed 4.5–11.5 mass percent range (approximately 4–6 volume percent) more representative of in-use fuel, the narrower test fuel range would result in more consistent vehicle test results.

• *Other Specifications*—adding distillation residue, total content of oxygenates other than ethanol, copper corrosion, solvent-washed gum, and oxidation stability specifications to better control other performance properties of test fuel. These proposed specifications are consistent with ASTM's D4814 gasoline specifications and CARB's LEV III test fuel requirements.

• *Updates to Gasoline Test Methods*—updating some of the gasoline test methods currently specified in § 86.113 with more appropriate, easier to use, or more precise test methods for ethanol-blended gasoline. Key changes include replacement of ASTM D323 with ASTM D5191 for measuring vapor pressure; replacement of ASTM D1319 with ASTM D5769 for measuring aromatics and benzene; and replacement of ASTM D1266 with three alternative ASTM test methods (D2622, D5453 or D7039) for measuring sulfur. We request comment on the use of three different test methods for the measurement of sulfur content.

• *Consolidation of Test Fuels*—consolidation of all gasoline exhaust and evaporative emission test fuels into a single general test fuel. This would be used for all on-highway vehicle testing with the exception of cold CO vehicle testing (which would use higher volatility test fuel) and high-altitude testing (which would be permitted to use lower volatility fuel). As discussed above, commercial gasoline would continue to be used for service accumulation (durability fuel). This is consistent with CARB's LEV III approach and should help limit the total number of test fuels that automakers need to manage.

[320] On Nov. 4, 2010, EPA issued a partial waiver for MY2007 and newer light-duty motor vehicles (75 FR 68094). On January 26, 2011, EPA extended the waiver to MY 2001–2006 light-duty motor vehicles (76 FR 4662).

[321] Premium-required defined at § 1065.710(d).

[322] 72 FR 8434 (February 26, 2007).

[323] For more information on current aromatics levels, refer to Chapter 3 of the draft RIA.

TABLE IV–21—PROPOSED GASOLINE EMISSIONS TEST FUEL

Property	Unit	Specification			ASTM reference procedure
		General testing	Low-temperature testing	High altitude testing	
Antiknock Index (R+M)/2		87.0—88.4		87.0 Minimum	D2699–11 and D2700–11.
Sensitivity (R–M)		7.5 Minimum			
Dry Vapor Pressure Equivalent (*DVPE*)	kPa (psi)	60.0–63.4 (8.7–9.2)	77.2–81.4 (11.2–11.8)	52.4–55.2 (7.6–8.0)	D5191–10b.
Distillation					
10% evaporated	°C (°F)	49–60 (120–140)	43–54 (110–130)	49–60 (120–140)	D86–10a.
50% evaporated	°C (°F)	77–88 (170–190)			
90% evaporated	°C (°F)	154–166 (310–330)			
Evaporated final boiling point	°C (°F)	193–216 (380–420)			
Residue	Milliliter	2.0 Maximum			
Total Aromatic Hydrocarbons	vol. %	19.5–24.5			D5769–10.
C6 Aromatics (benzene)	vol. %	0.6–0.8			
C7 Aromatics (toluene)	vol. %	4.4–5.5			
C8 Aromatics	vol. %	5.5–6.9			
C9 Aromatics	vol. %	5.0–6.2			
C10+ Aromatics	vol. %	4.0–5.0			
Olefins	mass %	4.5–11.5			D6550–10.
Ethanol	vol. %	14.6–15.0			D5599–00 (Reapproved 2010).
Total Content of Oxygenates Other than Ethanol.	vol. %	0.1 Maximum			
Sulfur	mg/kg	8.0–11.0			D2622–10, D5453–09 or D7039–07.
Lead	g/liter	0.0026 Maximum			D3237–06.
Phosphorus	g/liter	0.0013 Maximum			D3231–11.
Copper Corrosion		No. 1 Maximum			D130–10.
Solvent-Washed Gum Content	mg/100 ml	3.0 Maximum			D381–09.
Oxidation Stability	Minute	1,000 Minimum			D525–05.

EPA seeks comment on the appropriateness of the proposed forward-looking E15 test fuel for light- and heavy-duty gasoline vehicles. While we believe we have discretion under the statute to transition from E0 to E15 test fuel, we acknowledge that vehicle manufacturers will need to calibrate their vehicles to meet the proposed Tier 3 standards on fuel containing 15 percent ethanol by volume. Our analysis of the proposed Tier 3 standards (emission control technology, feasibility, cost, etc.) assumes the use of the proposed E15 test fuel. We anticipate that vehicle electronic control systems will be fully capable of adjusting to maintain emission performance when operating on E10 (or any remaining E0), but if E15 were not to enter the gasoline pool in significant quantities, it may be more appropriate to require that vehicles be calibrated for and tested on E10.

We are seeking comment on various alternative approaches, e.g., starting with E10 as the test fuel and transitioning to E15 as the market further transitions to E15 in use. This could include a market review in 2014 or 2015 followed by regulatory action to implement the change from E10 to E15 test fuel, if warranted. Or, it could include the establishment of a ''trigger point'' (e.g., 30 percent of gasoline is E15) in the Tier 3 final rule to prompt an automatic move to E15 after a certain period of time, e.g., two or three years. Or, we could simply set a future date (e.g., 2020) with sufficient time for transitioning to E15 test fuel. These transition approaches would give vehicle manufacturers additional lead time to prepare for higher ethanol concentrations in test fuel. We seek comment on the various transition approaches, their timing, and the appropriate specifications for an E10 test fuel to be used in the interim.

While the volatility (i.e., RVP) of CARB's E10 test fuel is 7.0 psi to be representative of in-use gasoline in California during summer months, conventional E10 in the rest of the country is currently around 10 psi. Thus, should we finalize E10 instead of E15, in the absence of any standard to reduce the in-use RVP of E10 to 9.0 psi or lower, we would also have to consider raising the RVP of certification test fuel to 10 psi to reflect the RVP level of the current in-use fuel. Were we to raise the volatility to 10 psi RVP, EPA believes that the proposed evaporative emission standards would be feasible, but this would increase the stringency of the proposed evaporative emission standards (see Section IV.C). Changing certification test fuel to 10 psi RVP would increase vapor generation rates during the refueling test by about 10 percent and during the hot soak, diurnal, canister bleed, and running loss tests by as much as 25 percent in total. To the extent that the refueling test dictates the size of the canister, the increased vapor generation would necessitate increases in the volume of

activated carbon used in the vehicle's onboard canister by about 10 percent. Perhaps more importantly, manufacturer's vehicle purge strategies and technologies would likely have to be modified to removing the larger vapor loads from the canister during vehicle operation. Some vehicles have adequate engine vacuum available to provide the increased purge, while others may require new or innovative approaches to increase purge volume or canister purge efficiency as discussed in the evaporative emissions technology discussion. While we have not performed a detailed analysis, EPA estimates that on average the evaporative standard compliance costs could be about $10–15 per vehicle higher at 10 psi RVP compared to 9 psi RVP for canister and purge upgrades. With respect to lead time, EPA's current proposal calls for either 40 percent of light-duty vehicles to meet the Tier 3 evaporative emission standards in 2017 MY (percentage option) or for a manufacturer to sell only zero evap PZEVs nationwide (PZEV only option). This basic approach for 2017 could still be feasible depending on the resolution of the test procedure issues and proposed flexibilities in phase-in schemes.

Raising the certification test fuel to 10 psi RVP would also impact the equivalency of CARB and EPA refueling and hot soak plus diurnal evaporative emission test procedures. These potential impacts would have to be addressed to maintain CARB/EPA evaporative emissions test reciprocity. Furthermore, there may be test procedure options for minimizing the burden of changing certification test fuel RVP while maintaining the needed in-use control.

EPA does not believe that a 10 psi certification test fuel would impact the feasibility or cost of the proposed leak emission standard or the proposed change in the OBD evaporative system leak detection requirements, since these are based on orifice diameter. Nor, do we believe that it would have any negative impact on permeation emissions or exhaust emissions.

As mentioned above, EPA issued a waiver allowing E15 to be introduced into commerce for use in MY 2001 and newer light-duty motor vehicles. On July 25, 2011, EPA finalized regulations to mitigate the potential for misfueling of vehicles, engines, and equipment not covered by the E15 waiver, i.e., MY 2000 and older light-duty motor vehicles, all heavy-duty gasoline vehicles and engines, motorcycles, and all gasoline-powered nonroad products (which includes boats).[324] Two of the required mitigation measures are a label for fuel pumps that dispense E15 to alert consumers to the appropriate and lawful use of the fuel and a prohibition on the use of E15 by consumers in vehicles not covered by the waiver, excluding flexible fuel vehicles (FFVs). If, as discussed in this proposed rule, any class of new heavy-duty gasoline vehicles or engines begin testing on E15 for certification, EPA would not need to issue a waiver under section 211(f)(4) to allow introduction of E15 into commerce for use in these vehicles certified on E15 test fuel. However, EPA acknowledges that changes to the gasoline pump label and prohibitions finalized in the E15 Misfueling Mitigation Measures Rule would have to be made before E15 could lawfully be sold for use in these heavy-duty vehicles. This would be addressed in a future action.

As discussed above in Sections IV.A.7.c (tailpipe emission testing) and IV.C.4.b (evaporative emission testing), we are proposing to require certification of all Tier 3 light-duty and chassis-certified heavy-duty gasoline vehicles on E15 test fuel. As described in those sections, we are proposing that EPA still accept testing for certification on CARB's E10 test fuel during the phase-in periods for the respective proposed Tier 3 vehicle tailpipe and evaporative emissions standards and, if certified on CARB's E10 test fuel, that EPA would not perform or require in-use exhaust or evaporative testing on E15 test fuel.

As mentioned earlier, we plan to continue to allow manufacturers to test vehicles on premium-grade gasoline should the vehicles require it. Since we cannot predict all future changes in gasoline vehicle technologies and in-use fuels, we are proposing to allow vehicle manufacturers to specify an alternative test fuel under certain situations. Under this proposal, if manufacturers were to design vehicles that required operation on a higher octane, higher ethanol content gasoline (e.g., dedicated E30 vehicles or FFVs optimized to run on E30 or higher ethanol blends), under 40 CFR 1065.701(c), they could petition the Administrator for approval of a higher octane, higher ethanol content test fuel if they could demonstrate that such a fuel would be used by the operator and would be readily available nationwide, vehicles would not operate appropriately on other available fuels, and such a fuel would result in equivalent emissions performance. For vehicles certified on high-octane, high-ethanol gasoline, all EPA confirmatory and in-use testing would also be conducted on high-octane, high-ethanol gasoline. This could help manufacturers who wish to raise compression ratios to improve vehicle efficiency as a step toward complying with the 2017 and later light-duty greenhouse gas and CAFE standards. This in turn could help provide a market incentive to increase ethanol use beyond E10 and enhance the environmental performance of ethanol as a transportation fuel by using it to enable more fuel efficient engines. We seek comment on the appropriateness of the alternative test fuel provisions at § 1065.701(c) and the need to specify more precisely the makeup of such a fuel (ethanol content, as well as other fuel parameters) in the regulations at this time. We are also seeking comment on whether there are other aspects of today's proposed standards that might need to be modified to provide an incentive for, or remove obstacles to, the development of highly efficient vehicles optimized for use on higher level ethanol blends.

2. Proposed Flexible Fuel Vehicle Test Fuel

While the Agency has for some time had testing requirements for flexible fuel vehicles (FFVs) on E85 fuel blends, EPA currently has no regulatory specifications for the test fuel itself. Historically, our laboratory practice has been to blend indolene (E0) with neat ethanol and normal butane to produce an FFV test fuel with 83 volume percent ethanol and an RVP from 6.0 to 6.5 psi. However, the lack of E85 test fuel specifications has caused confusion and inconsistency among FFV manufacturers in carrying out their certification requirements.

Similar to the previous discussion regarding gasoline test fuels, we believe it is important that the fuel used to test FFVs reflect the composition of actual in-use E85. This may become increasingly important if E85 usage in FFVs increases to help satisfy the growing RFS2 renewable fuel requirements.

The term ''E85'' has historically been used to describe an ethanol blend with a maximum ethanol content of 83 volume percent and specified minimum ethanol content for use in FFVs. In the recently updated ASTM International specification, the minimum ethanol concentration was reduced from 68 to 51 volume percent.[325] As part of the updated specification, ASTM retired the name E85 because it has caused

[324] 76 FR 44406 (July 25, 2011).

[325] ASTM International D5798–11, ''Standard Specification for Ethanol Fuel Blends for Flexible-Fuel Automotive Spark-Ignition Engines''.

confusion regarding the necessary variability in the ethanol content of the blend depending upon seasonal climactic conditions. The official name in the new ASTM specification is ''ethanol fuel blends for flexible-fuel automotive spark-ignition engines.'' For the sake of brevity, we shall refer to this fuel as E51–83.

Consistent with our current policy regarding the formulation of FFV test fuel, we believe that the ethanol content should be at or near the maximum ethanol level on which the vehicles were designed to operate to ensure that the testing reflects the full range of in-use formulations and emissions performance. To provide adequate flexibility for test fuel manufacturers, we are proposing that the ethanol content must be from 80 to 83 volume percent. Rather than specify ranges for the other fuel parameters as we have done for gasoline test fuel in Table IV–21, we are proposing that the FFV test fuel would be defined based on the results from blending the proposed E15 standard gasoline test fuel with ethanol. We propose that denatured fuel ethanol (DFE) that meets the proposed specifications would be used to increase the ethanol content to 80 to 83 volume percent.[326]

It is important to ensure that the volatility of FFV test fuel meets minimum volatility specifications to provide adequate startability and for safety reasons. The ASTM minimum RVP specification that conforms to the specified temperature at which FFV emission testing takes place (68 to 86 °F) is 5.5 psi. EPA conducted discussions with vehicle and test fuel manufacturers to arrive at the current guidance that the RVP of the finished test fuel should be between 6.0 and 6.5 psi. We propose to formalize the current guidance in the regulatory requirements for FFV test fuel. We propose that commercial grade normal butane could be added to trim the RVP of the finished test fuel to meet the proposed specifications.[327] A 6.0 to 6.5 range in RVP has historically provided test fuel manufacturers adequate flexibility in formulating test fuels. Limiting the amount of butane that is added to formulate FFV test fuels is important because if excessive volumes of butane were used it could inappropriately reduce the stringency of emissions testing.

As an alternative to the use of DFE to manufacture FFV test fuel, we propose that neat (undenatured) fuel grade ethanol could be used. We also propose that as an alternative to using a finished E15 standard gasoline test fuel in the manufacture of FFV test fuel that the gasoline blendstock used to produce a compliant E15 test fuel could be used to manufacture the FFV test fuel. This would allow ethanol to be blended only once to produce FFV test fuel. The test fuel manufacturer would be required to test a sample of the subject gasoline blendstock after the addition of ethanol to produce a finished standard E15 gasoline test fuel and demonstrate that the blend meets all of the proposed requirements for standard gasoline test fuel described in Section IV.D.1.

We propose that the above FFV emissions test fuel specifications would become applicable on the same schedule as the proposed E15 standard gasoline test fuel specifications become applicable for light- and heavy-duty gasoline vehicles (described below in Section IV.D.3). We believe that the proposed requirements would ensure that FFV test fuel reflects the composition of in-use ethanol fuel blends for flexible-fuel automotive spark-ignition engines while minimizing the burden on the industry with respect to test fuel formulation and the number of test fuel blend components that must be stored.

Under the Tier 2 program, FFVs utilize a test fuel containing 10 percent ethanol with an RVP of approximately 10 psi for evaporative emission testing. The proposed E15 certification fuel for non-FFVs is a 9 psi E15 fuel. We seek comment on whether the new E15 evaporative emissions test fuel for FFVs should continue to have an RVP of 10 psi to maintain the level of performance established under the Tier 2 program.

3. Proposed Implementation Schedule

As described earlier in Section IV.C, we are proposing Tier 3 exhaust and evaporative emission standards with today's notice. The proposed changes in the specifications for test fuel would apply to vehicles certified to these new standards. We are proposing to transition to the new test fuel during the first few years that the Tier 3 standards are phasing in. As described in Sections IV.A and IV.B, testing with the new fuel would start with light-duty vehicles certified to Tier 3 bin standards at or below Bin 70, and heavy-duty vehicles certified to Tier 3 bin standards at or below Bin 250 (for Class 2b) and Bin 300 (for Class 3). Starting with model years 2020 for light-duty and 2022 for heavy-duty, we would require that all manufacturers use the new test fuel for all exhaust emission testing (with the exception of Small Volume Manufacturers and small businesses, which could delay using the new test fuel until model year 2022). Manufacturers would also need to comply with cold temperature CO and NMHC standards using the new test fuel for any models that use E15 test fuel for meeting the light-duty Tier 3 exhaust emission standards. These same tests would also provide the basis for meeting GHG requirements under 40 CFR part 86 and fuel economy requirements under 40 CFR part 600, as described in the following section.

We are proposing to require evaporative emission testing with the new test fuel for any models that are certified to the Tier 3 evaporative emission standards. To the extent that these models are different than those used for exhaust emission testing with the new test fuel, manufacturers would need to do additional testing to demonstrate compliance with all applicable standards. They may alternatively use the new test fuel earlier than the regulations specify to avoid additional testing. We further propose to require that manufacturers submit certification data based on the new test fuel to demonstrate compliance with refueling emission standards for any vehicles that are certified to the Tier 3 evaporative emission standards.

4. Potential Implications on CAFE Standards, GHG Standards, and Fuel Economy Labels

EPA and the National Highway Traffic Safety Administration (NHTSA) recently finalized a joint greenhouse gas (GHG) emissions and corporate average fuel economy (CAFE) standards for MY 2017–2025 light-duty vehicles, light-duty trucks, and medium-duty passenger vehicles.[328] These GHG and CAFE standards build upon the National Program that was first announced by the President in May 2009 and which allows manufacturers to build a single fleet of light vehicles that can satisfy all federal and state requirements for GHG emissions and fuel economy. The first round of standards by EPA and NHTSA under the National Program cover MY 2012–2016.[329]

The recently finalized MY 2017–2025 GHG and CAFE standards affect essentially the same vehicle classes over the same timeframe as this proposal for non-GHG emissions standards and gasoline fuel quality. Accordingly, EPA believes it is important for the two rulemakings to be coordinated so that manufacturers can develop future

[326] The proposed requirements for DFE are contained in Section V.C of today's preamble.

[327] The specifications for commercial grade butane are contained in 40 CFR 80.82.

[328] 77 FR 62623 (October 15, 2012).

[329] 75 FR 25324 (May 7, 2010).

product development plans with a full understanding of the major regulatory requirements they would be facing over the MY 2017–2025 time frame.

The Agency would like to highlight two important issues of overlap between these two rulemakings: Test fuel and useful life. As explained above, today's action proposes to update EPA's test fuel to better match in-use fuels, with the change in test fuel phased-in from MY 2017–2020 for light-duty exhaust emission compliance. The proposal involves several changes to the emissions test fuel specifications, including, notably, a 15 percent by volume ethanol content. The current emissions test fuel contains zero ethanol. Regarding useful life, we are proposing a longer useful life for some vehicles, as described in Section IV.A.7.b, from the current 120,000 miles to 150,000 miles.

a. Test Fuel

The proposed change in test fuel, if finalized, could have implications for both the CAFE and GHG emissions compliance programs, as well as the fuel economy labeling program. EPA is committed to the principle of ensuring that the proposed change in test fuel would not affect the stringency of either the CAFE or GHG emissions standards, and that the labeling calculations would be updated to reflect the change in test fuel.

While NHTSA establishes the fuel economy standards for the CAFE program, EPA is responsible for vehicle testing and calculation of fuel economy values used by manufacturer for compliance with the CAFE standards. Under the Energy Policy and Conservation Act (EPCA), limitations are placed on the test procedures used to measure fuel economy for passenger cars. For passenger automobiles, EPA has to use the same procedures used for model year 1975 automobiles, or procedures that give comparable results.[330] When EPA has made changes to the FTP or HFET, we have evaluated whether it is appropriate to provide for an adjustment to the measured fuel economy results, to comply with the EPCA requirement for passenger cars that the test procedures produce results comparable to the 1975 test procedures. These adjustments are typically referred to as a CAFE or fuel economy test procedure adjustment or adjustment factor.

Because ethanol has a lower energy content than gasoline, i.e., fewer British thermal units (Btus) or joules per gallon,[331] and fuel economy is defined in terms of miles per gallon of fuel, it is almost certain that the same vehicle tested on a test fuel with 15 percent ethanol content will yield a lower fuel economy value relative to the value if it were tested on the current test fuel with zero ethanol content. For CAFE purposes, the existing fuel economy equation for gasoline that has been in use for many years already contains an adjustment for the energy content of the test fuel to calculate fuel economy equivalent to what would have been determined using the 1975 baseline test fuel.[332] Therefore, it is not clear that any further action is necessary to account for the proposed change in certification test fuel. Within this equation, however, is a so-called ''R-factor'' to account for the fact that the change in fuel economy is not directly proportional to the change in energy content of the test fuel. Although an R-factor of 0.6 has been used since 1988, manufacturers have suggested that a higher value may be more appropriate. We discuss this issue in a memo to the docket.[333] This is a technical issue with the fuel economy equation that has been raised in the context of the proposed certification test fuel change, but technically it is distinct from the proposed change in test fuel. EPA will continue to investigate this issue and if necessary address it as part of a future action.

EPA is also committed to retaining equivalent stringency for GHG emissions compliance associated with the proposed test fuel change. The proposed changes in test fuel properties in this rule do not have any appreciable impact on carbon dioxide grams per mile levels. This is supported by data from the EPAct study, which show that the change in the test fuel have both positive and negative impacts that offset each other and that there is no net impact on carbon dioxide grams per mile levels. This is discussed in a memo to the docket.[334] We seek comment on the impact of this proposal on CO_2 emissions. Should action to adjust the compliance calculation for the light-duty GHG standards become warranted, we would include such changes as a part of a future action.

EPA expects that there may be a potential impact on manufacturer's fuel economy and greenhouse gas testing burden during the Tier 3 phase-in years. Currently, for example, manufacturers carry over a considerable amount of previous model year data in support of their Fuel Economy Labeling and CAFE/Greenhouse Gas programs. We are proposing that Tier 3 compliant vehicles would be required to test on E15 test fuel, and thus, manufacturers would normally not be allowed to carry over previous model year data from vehicles tested on E0 test fuel. EPA anticipates that such carryover requests could be handled during the Tier 3 phase-in years with modifications to EPA's current policy for the use of analytically derived data (see EPA's fuel economy, CO_2, and carbon-related exhaust emissions testing regulations at 40 CFR 600.006–08(e) and EPA guidance letter CD–12–03 (February 27, 2012) and CCD–04–06, (March 11, 2004 [335])). EPA requests comments on whether there is a need for further reductions in fuel economy/greenhouse gas testing burden beyond that allowed by the above EPA guidance letters. Any comments supporting the need to reduce fuel economy/greenhouse gas testing burden (beyond that allowed by EPA's policy for the use of analytically derived data) should describe one or more specific methods of reducing such testing burden.

Finally, EPA will need to update the fuel economy labeling calculations in 40 CFR Part 600 to reflect the proposed E15 test fuel. The current methodology, which took effect with the 2008 model year, contains equations that, when applied to test results using current fuel (zero alcohol), adjust for an average national impact of ethanol in fuel on fuel economy. These equations would need to be revised such that the adjustment remains consistent with the actual national use of ethanol in fuel.

b. Useful Life for GHG Standards

As stated above, EPA is committed to retaining equivalent stringency for GHG emissions compliance beginning in MY 2017. In contrast to the proposed Tier 3 test fuel, for which we are uncertain as to the effects on GHG emissions, we believe that certifying a vehicle to a longer useful life for any emission constituent would have only a

[330] 49 U.S.C. 32904(c).

[331] EPA estimates that, on average, E85 fuel contains 25–30 percent less energy per gallon than gasoline with zero ethanol.

[332] 40 CFR 600.113–12(h)(1).

[333] Butler, A. (February 2013) Analysis of the Effects of Changing Fuel Properties on the EPA Fuel Economy Equation and R-Factor. Memorandum to the docket.

[334] Butler, A. (February 2013) Analysis of the Effects of Changing Fuel Properties on the EPA Fuel Economy Equation and R-Factor. Memorandum to the docket.

[335] EPA Guidance Letters CD–12–03 (Analytically Derived CO_2 and Carbon-Related Exhaust Emissions (CREE) for Light-Duty Vehicles) and CCD–04–06 (Updated Analytically Derived Fuel Economy (ADFE) Policy for 2005 MY and Later), March 11, 2004, is available through the EPA Transportation and Air Quality Document Index System at: *http://iaspub.epa.gov/otaqpub/*.

beneficial effect on emissions. To address potential concerns about changes in the stringency of the GHG standards resulting from a longer useful life, we are not proposing to require a longer useful life for GHG emission standards. As this approach may result in additional testing burden, we are proposing that manufacturers could optionally certify GHG emissions to a 150,000 mile, 15 year useful life.

5. Consideration of Nonroad, Motorcycle, and Heavy-Duty Engine Emissions Test Fuel

As described earlier in Section IV.D.1., we are proposing new specifications for the gasoline emissions test fuel used for testing highway vehicles subject to the proposed Tier 3 standards. In developing today's proposal, EPA also considered proposing the change in test fuel specifications for other categories of engines, vehicles, equipment, and fuel system components that use gasoline. This would include a wide range of applications, including small nonroad engines used in lawn and garden applications, recreational vehicles such as ATVs and snowmobiles, recreational marine applications, on-highway motorcycles, and larger heavy-duty gasoline engines. While engines in some of these categories employ advanced technologies similar to light-duty vehicles and trucks, the vast majority of these engines employ much simpler designs, with many of the engines being carbureted with no electronic controls. Because of lower level of technology, emissions from these engines are potentially much more sensitive to changes in fuel quality.

EPA is not proposing to apply the new emissions test fuel specifications to these other categories of engines, vehicles, equipment, and fuel system components. In discussing the potential change in test fuel specifications with the large number of businesses potentially impacted by such a change, many companies supported such a change. However, a number of manufacturers raised concerns about the level of ethanol in the new fuel, the cost of recertifying emission families on the new fuel, the impact on nationwide product offerings, and the cost impact of complying with the existing standards on the new test fuel. EPA believes it is important that the emissions test fuel for these other categories reflect real-world fuel qualities but has elected to defer moving forward now pending additional analysis of the impacts of changing the test fuel specifications for the wide range of engines, vehicles, equipment and fuel system components that could be impacted. These impacts include the impact on the emissions standards, as well as the other issues raised by the manufacturers. EPA plans to explore such a change in a separate future action. EPA requests comment on the implications of changing the test fuel for these other categories and whether a different test fuel would be more appropriate for these other categories.

6. Consideration of CNG and LPG Emissions Test Fuel

There are currently no sulfur specifications for the test fuel used for certifying natural gas vehicles. There is also no sulfur specification in § 86.113 for the test fuel used for certifying liquefied petroleum gas (LPG) vehicles. The corresponding LPG test fuel for heavy-duty highway engines and for nonroad engines in § 1065.720 includes an 80 ppm maximum sulfur specification.

We request comment on the appropriateness of changing § 86.113 to reference 40 CFR part 1065 for both natural gas and LPG test fuels. We further request comment on amending these specifications to better reflect in-use fuel characteristics, and in particular on the appropriateness of aligning the sulfur specifications with those that apply for gasoline test fuel. Changing the sulfur specifications would depend on establishing that the new specification is consistent with the range of properties expected from in-use fuels.

E. Small-Business Provisions

As in previous vehicle rulemakings, our justification for including provisions specific to small businesses is that these entities generally have a greater degree of difficulty in complying with the standards compared to other entities.

In developing the proposed Tier 3 vehicle program, we evaluated the environmental need as well as the technical and financial ability of manufacturers and others to meet the standards as expeditiously as possible. We believe it is feasible and necessary for the vast majority of the program to be implemented in the established time frame to achieve the air quality benefits as soon as possible. Based on information available from small manufacturers and others, we believe that entities classified as small generally face unique circumstances with regard to compliance with environmental programs, compared to larger entities. Thus, as discussed below, we are proposing several flexibility provisions for small businesses in the vehicle industry to reduce the burden that this program could have on them. These proposed provisions are based on the recommendations of the Small Business Advocacy Review (SBAR) Panel described in Section XIII.C of today's proposal and include a few additional provisions.

Small entities generally lack the resources that are available to larger companies to carry out necessary research and development and to raise capital for investing in a new regulatory program. Small entities are also likely to have more difficulty in competing for any needed engineering and construction resources and lower production volume over which to spread their compliance costs. Small entities also tend to have limited product lines, which limits their ability to take advantage of the phase-in and ABT flexibility provisions in the proposal. As such, we are proposing regulatory flexibility provisions that would provide additional lead time and reduced testing burden for small entities in meeting the proposed Tier 3 standards. This proposed approach would allow the overall program to begin as early as possible; achieving the air quality benefits of the program as soon as possible, while helping to ensure that small entities have adequate time to make any necessary modifications to their product lines. We believe that small business regulatory flexibilities could provide these entities with additional help and/or time to take advantage of technological developments by other parties and to accumulate capital internally or to secure capital financing from lenders, and could spread out the availability of any needed engineering resources. We believe these provisions will also reduce their overall compliance burden and allow them to more easily transition to the new standards in a way that matches their business practices.

The provisions described below would be available to all small businesses subject to the Tier 3 emission standards. The types of companies subject to the Tier 3 emission standards include vehicle manufacturers, and two additional categories of businesses that are generally referred to as independent commercial importers (ICIs) and alternative fuel vehicle converters. As discussed below, the proposed set of flexibilities would also be available to manufacturers in these three business categories that sell less than 5,000 vehicles per year that are subject to the Tier 3 emission standards.

1. Lead Time for Exhaust and Evaporative Emission Standards

As noted above, small businesses have limited resources available for developing new designs to comply with new emission standards. In addition, it is often necessary for these businesses to rely on vendor companies for technology. Moreover, percentage phase-in requirements and declining fleet average standards pose a dilemma for a small manufacturer that has a limited product line (e.g., the manufacturer certifies vehicles in only one or two test groups). Thus, similar to the flexibility provisions implemented in previous vehicle rules, the Panel recommended that EPA allow small businesses the following flexibility option for meeting the proposed Tier 3 emissions standards.

EPA is proposing that small businesses (and small volume manufacturers, as discussed below) be given additional lead time to comply with the proposed Tier 3 exhaust and evaporative emission standards. Specifically, we propose to allow small manufacturers to postpone compliance with the standards and other Tier 3 requirements, including use of the proposed new certification test fuel, until model year 2022. For model year 2022 and later, small manufacturers would be subject to the same Tier 3 exhaust and evaporative requirements as other manufacturers, including moving to the declining FTP fleet average NMOG+NO_X curve and complying with the fully phased-in standard of 30 mg/mi, as well as certifying on E15 test fuel. (This approach is similar to that in the Tier 2 rule where EPA allowed small manufacturers to wait until the end of the phase-in to comply with the Tier 2 standards.) As described earlier in this section, the proposed Tier 3 rule has several different phase-in schedules; with the final dates varying from model year 2021 for the new light-duty exhaust PM standards to model year 2025 for the new light-duty exhaust gaseous pollutant standards. Requiring all small businesses to comply with the full slate of Tier 3 requirements in model year 2022 should provide sufficient lead time for manufacturers to plan for and implement the technology changes needed to comply with the Tier 3 standards.

During the SBAR Panel process, one small entity representative (SER) recommended that EPA adopt relaxed exhaust standards for small manufacturers. The SER noted that the exhaust emission averaging program being proposed by EPA would allow large manufacturers that have many engine families to certify their small, niche products at emission levels numerically higher than the standards. Small manufacturers that typically do not have more than one or two emission families generally cannot use averaging to the same extent because of their limited product offerings. The SER was concerned that the high-performance vehicles produced by large manufacturers which they compete against would be able to certify at numerically higher levels at less cost than the SER would incur. The SER-recommended relaxed NMOG+NO_X standards over the Federal Test Procedure (FTP) are 125 mg/mi in model year 2020 and 70 mg/mi in model year 2025. This is the same general approach that the CARB Board approved for small volume manufacturers in LEV III (a relaxed standard NMOG+NO_X of 125 mg/mi followed by a fully phased-in standard of 70 mg/mi in model year 2025), except that the CARB program introduces the relaxed standard and the change in test fuel in model year 2022.

As described above, although we are proposing a delay in the Tier 3 requirements, EPA is not proposing to relax the fully phased-in standards for the small entities. We believe that these standards are technologically feasible and can be readily achieved with the additional lead time we are proposing as the technology would have already been demonstrated by other manufacturers, in some cases on the very same engines used by the small manufacturers. In addition, the compliance costs for many of these vehicles, even if higher on an absolute basis, may still be lower on a relative basis given the higher average cost of the vehicles. Furthermore, EPA is proposing to allow manufacturers to apply for hardship relief (discussed below) on a case-by-case basis. EPA requests comment on our proposed approach and whether there is an additional need for the final rule to allow small manufacturers to meet relaxed NMOG+NO_X exhaust emission standards on the FTP over the long term, as suggested by the SER and as reflected in action by CARB.

In light of the CARB Board-approved implementation schedule for small manufacturers described above, we also request comment on an option that would not provide a permanent relaxed standard for small manufacturers, but would provide a temporary relaxed standard matching the California standard from model year 2022 through 2024. This option would apply to the Tier 3 exhaust emission standards starting in 2022, except that a relaxed NMOG+NO_X standard of 125 mg/mi would apply in model years 2020–2024 for FTP testing. For model years 2025 and later, the standard would be the same as for all other manufacturers, or 30 mg/mi. Under this option, small manufacturers would have to take some action to reduce emissions in 2022 and could postpone meeting fully phased-in Tier 3 standards until 2025.

2. Assigned Deterioration Factors

Under EPA's regulations, manufacturers must demonstrate that their vehicles comply with the emission standards throughout the ''useful life'' period. This is generally done by testing vehicles at low-mileage and then applying a deterioration factor to these emission levels. The deterioration factors are determined by aging new emission control systems and then testing the aged systems again to determine how much deterioration in emissions has occurred. In order to reduce the testing burden in previous rulemaking, EPA has allowed small manufacturers to use deterioration factor values assigned by EPA instead of performing the extended testing. A manufacturer would apply the assigned deterioration factors to its low-mileage emission level to demonstrate whether it complied with the Tier 3 emission standards.

With today's proposal, EPA proposes that small businesses be allowed the option to use EPA-developed assigned deterioration factors in demonstrating compliance with the Tier 3 exhaust and evaporative emission standards. In the past, EPA has relied on deterioration factor data from large manufacturers to develop the assigned deterioration factors for small manufacturers. EPA would expect to follow a similar procedure to determine the assigned deterioration factors for the Tier 3 standards once large manufacturers start certifying their Tier 3 designs. Given that larger manufacturers would begin phasing in to the Tier 3 standards in model year 2017, EPA should have a significant set of emissions deterioration data upon which to base the assigned deterioration factors for small businesses within the first few years of the Tier 3 program. EPA recognizes that assigned deterioration factors need to be determined well in advance of model year 2022 in order to provide sufficient time for small businesses to decide whether or not to use the assigned deterioration factors for certification purposes.

3. Reduced Testing Burden

Under EPA's regulations, manufacturers must perform in-use

testing on their vehicles and demonstrate their in-use vehicles comply with the emission standards. The current in-use testing regulations provide for reduced levels of testing for small manufacturers, including no testing in some cases. EPA is proposing to continue the reduced levels of testing for small businesses under the Tier 3 program. Under the reduced testing provisions, manufacturers that sell less than 5,000 units per year would not be required to do any testing under the in-use program. Manufacturers that sell between 5,001 and 15,000 units per year would be required to test two vehicles per test group, but only under the high-mileage conditions specified in the in-use program.

Under current regulations, manufacturers may waive testing for PM emissions for light-duty vehicles and trucks, except for diesel-fueled vehicles. Manufacturers are still subject to the standards and must make a statement of compliance with the PM standards. As described in Section IV.A, EPA is proposing new PM standards and will require manufacturers to test for PM emissions for all fuels. Because PM testing requires additional test equipment and facilities, the costs incurred for PM testing can be substantial, especially for a company selling small numbers of vehicles. Therefore, EPA is proposing to continue the waiver for PM testing in the Tier 3 timeframe for small businesses. Small businesses will not be required to measure PM emissions when they certify to the Tier 3 emission standards. In lieu of testing, small businesses will be required to make a statement of compliance with the Tier 3 p.m. standards. We would retain the ability to determine the PM emissions results in confirmatory or in-use testing.

As described in Section IV.C, EPA is proposing new OBD requirements for vehicles certifying to the Tier 3 standards. The proposed OBD requirements are the same as CARB's existing OBD requirements. The proposed OBD provisions require additional amounts of testing and information that can add significant cost for manufacturers if they are not already meeting the CARB OBD requirements. Small business vehicle manufacturers tend to comply with the CARB OBD requirements because they want to sell in the California market. On the other hand, alternative-fuel converters do not generally certify with CARB because of the significant cost burden of complying with the CARB OBD requirements. We are therefore proposing that small business alternative-fuel converters may continue to comply with EPA's existing OBD requirements (see 40 CFR 86.1806–05) when the Tier 3 standards become effective. However, the proposed upgraded OBD requirements would have to be met by small entities and ICI's by the 2022 MY.

Alternative-fueled vehicles, MDPVs, FFVs, and HDVs do not have SFTP emissions requirements under the current regulations. As described in Section IV.A, EPA is proposing to apply the Tier 3 SFTP standards to all vehicles, including alternative-fueled vehicles, MDPVs, FFVs, and HDVs. Because SFTP testing includes emission measurement over the SC03 test cycle, which requires additional test facilities beyond those needed to run the FTP, the costs incurred for SC03 testing can be substantial, especially for companies like alternative fuel converters that sell very low numbers of converted vehicles. We are proposing that for the categories of vehicles newly subject to the SFTP standards, including alternative-fueled vehicles, manufacturers have the option to substitute the FTP emissions levels for the SC03 emissions results for purposes of compliance when calculating the SFTP emissions. However, we would retain the ability to determine the composite emissions using SC03 test results in confirmatory or in-use testing. Because the vehicles being converted to an alternative fuel will likely have been tested for SFTP compliance, we expect the SFTP emissions should be similarly low, and therefore the added SC03 testing burden is unnecessary.

During the SBAR process, one SER requested that EPA eliminate some of the evaporative emission testing requirements for small businesses based on its belief that some of the tests may be duplicative. While EPA understands the reasons behind the SER's suggestion, we believe it may be premature to consider such an option in the Tier 3 rule given the potential impact of the CO_2 emission standards on engine and fuel system development. Currently, it is generally understood that the 2-day diurnal test drives the purge characteristics of evaporative control systems, while the refueling test, and to a lesser degree the 3-day test, drive the capacity requirement of evaporative canisters. Prospectively, due to expected changes in engine and fuel system designs in response to upcoming CO_2 emission standard requirements, this may not be the case. Therefore, EPA believes it is appropriate to retain all of the evaporative test procedures. It can be noted that under current regulations, EPA does allow manufacturers to waive 2-day diurnal testing for certification purposes (see 40 CFR 86.1829–01(b)(2)(iii)) and perform only the 2-day diurnal test as part of the in-use testing program (see 40 CFR 86.1845–04(c)(5)(ii)). These provisions would continue in the Tier 3 program. In general, EPA is open to changes that reduce test burden while maintaining the environmental effectiveness of its programs and could consider changes like those suggested by the SER in the future as the impacts of the future regulations on engine and vehicle design become clearer. Therefore, EPA requests comment on streamlining the current test procedures for small businesses in ways that would still maintain the overall effectiveness of the tests.

4. Hardship

EPA is proposing hardship provisions for small businesses subject to the Tier 3 exhaust and evaporative emission standards. Under the hardship provisions, small businesses would be allowed to apply for additional time to meet the 100 percent phase-in requirements for exhaust and evaporative emissions. All hardship requests would be subject to EPA review and approval. Appeals for such hardship relief would need to be made in writing and must be submitted well before the earliest date of potential noncompliance. The request would need to identify how much time is being requested. It must also include evidence that the noncompliance would occur despite the manufacturer's best efforts to comply, and must contain evidence that severe economic hardship would be faced by the company if the relief is not granted. The hardship provision should effectively provide the opportunity for small businesses to obtain more time to comply with the new Tier 3 standards. The existing hardship provisions limit the extra time that can be requested to 1 year, but we are proposing that such a limit is not needed as part of the Tier 3 hardship provisions.

5. Applicability of Flexibilities

Under EPA's Tier 2 regulations, EPA provides a number of flexibilities for small volume manufacturers (SVMs). The criteria for determining if a company is a ''small volume manufacturer'' is based on the annual production level of vehicles and is based on whether the company produces less than 15,000 vehicles per year. Unlike EPA's current small volume manufacturer criteria, the Small Business Administration (SBA) defines which manufacturers are small businesses based on the number of employees for vehicle manufacturers and annual revenues for ICIs and

alternative fuel converters. For example, SBA defines a small business vehicle manufacturer as those who have less than 1,000 employees.

With today's notice, EPA proposes that all small businesses that are subject to the Tier 3 standards and that meet the SBA criteria be eligible for the flexibilities described above. Unless otherwise noted, the proposed flexibilities would be available to all small business vehicle manufacturers, ICIs, and alternative fuel converters subject to the Tier 3 standards. In addition, EPA is proposing that manufacturers subject to the Tier 3 standards which meet a specified sales-based criterion be eligible for the flexibilities described above. It is relatively easy for a manufacturer to project and ultimately determine sales. Determining the annual revenues or number of employees is less straightforward. In the recent rule setting the first light-duty vehicle and truck CO_2 emission standards, EPA adopted provisions for small manufacturers based on a sales cutoff of 5,000 vehicles per year as opposed to the 15,000 level noted earlier that is used in the Tier 2 program. EPA proposes that the small volume manufacturer definition be based on the 5,000 vehicle per year level for the Tier 3 program. For purposes of the Tier 3 rule, the 5,000 limit would be based on a running three-year average of the number of light-duty vehicles, light-duty trucks, medium-duty passenger vehicles, and complete heavy-duty trucks below 14,000 lbs GVWR. EPA believes the 5,000 unit cut-off for small volume manufacturers would include all of the vehicle manufacturers, ICIs, and alternative fuel converters that currently meet the applicable SBA definition as well as a few additional companies that have similar concerns to small businesses.

EPA requests comment on the issue of extending eligibility for the Tier 3 small volume manufacturer provisions to very small manufacturers that are owned by large manufacturers but are able to establish that they are operationally independent. EPA has established such a provision in the light-duty greenhouse gas (GHG) program.[336] EPA requests comment specifically on whether a manufacturer who meets the criteria for establishing operational independence under 86.1838–01(d) for eligibility for SVM provisions under the GHG program should be considered to be operationally independent and similarly eligible for SVM provisions under the Tier 3 program.

F. Compliance Provisions

1. Exhaust Emission Test Procedures

We are proposing technical amendments to 40 CFR part 1066 as part of the effort to migrate test requirements from 40 CFR part 86 for light-duty vehicles and measurement of criteria pollutants. The proposed procedures in part 1066 reference large portions of part 1065 to align test specifications that apply equally to engine-based and vehicle-based testing, such as CVS and analyzer specifications, calibrations, test fuels, calculations, and definitions of many terms. The proposed part 1066, as amended, also incorporates most of the detailed part 86 procedures.

Current testing requirements related to chassis dynamometers rely on a combination of regulatory provisions, EPA guidance documents, and extensive learning from industry experience that has led to a good understanding of best practices for operating a vehicle in the laboratory to measure emissions. This proposal attempts to capture this range of material, integrating and organizing these specifications and procedures to include a complete set of provisions to ensure that emission measurements are accurate and repeatable. We request comment on the range of proposed requirements related to these chassis test procedures.

Proposed revisions to part 1066, and adjustments from part 86, include the following:

- Clarification of regulatory requirements.
- Correction of typographical errors.
- Migration of mass-based emission calculations from part 86 to part 1066.
- Introduction of a new NMOG calculation.
- Revision of 40 CFR part 1066, subpart B, to increase the specificity with which part 1065 references are made as they pertain to testing equipment, test fluids, test gases, and calibration standards.
- Addition of coastdown procedures for light-duty vehicles.
- Reordering of the test sequence with respect to vehicle preparation and running a test.
- Specifying part 1065 procedures for PM measurement, including certain deviations from part 1065 for chassis testing.
- Insertion of detailed test specifications for vehicles certified under 40 CFR part 86, subpart S.

We are proposing the use of part 1065 for PM measurement with slight adjustments to the dilution air temperature, minimum dilution ratio, and background measurement requirements. By controlling the parameters that affect PM formation (dilution air temperature, dilution factor, sample residence time, filter face temperature, and filter face velocity), the proposed procedures include improvements that will reduce lab-to-lab and test-to-test variability.

We are proposing to eliminate separate sampling of Bag 2 of the FTP test cycle to allow for an increase in sampled PM mass. The proposed alternative approach is to sample Bags 1 and 2 of the FTP on a single filter, and sample Bags 2 and 3 of the FTP onto a second filter. This will generally involve simultaneous sampling of Phase 2 onto two separate filters. As an additional alternative, manufacturers may run cold and hot UDDSs without simultaneous sampling of the cold UDDS Phase 2, or to sample Bag 1, Bag 2, and Bag 3 on a single filter. Manufacturers choosing any of these options must still run a separate three-bag test for evaporative emission testing. We request comment on continuing to allow sampling under the traditional FTP methodology of a bag or filter per test phase (3 phases in total) instead of these proposed new methods. We also request comment on the appropriate transition to using the new sampling and calculation methods.

We are proposing to revise the chassis dynamometer specifications in part 1066 by removing the maximum roll diameter and by requiring speed and force measurements at a minimum frequency of 10 hertz (Hz). Some manufacturers may be interested in testing with nonstandard dynamometer configurations, such as new flat-track dynamometers or old twin-roll dynamometers. We may approve the use of these and other nonstandard dynamometer configurations as alternative procedures under 40 CFR 1065.10(c)(7).

Part 1066 relies extensively on calculations involving physical parameters to calculate emission rates and perform various calibrations and verifications. As reflected in the current version of part 1066, manufacturers have used a variety of units to perform these calculations. We would expect that dynamometers and other laboratory equipment are all capable of operating in SI units even if current practice in some laboratories is to use other units. Moving toward standardized units for calculations would allow us to more carefully and appropriately specify precision values for various measured and calculated parameters. This would also simplify calculations, facilitate review of results from different

[336] See 77 FR 62793–62794 and 40 CFR 86.1838–01(d)

laboratories, and help with communications regarding any round-robin testing that might occur. Note that we are not contemplating converting emission standards to SI units. We request comment on completing the migration toward SI units in part 1066. In particular, we request comment on adding vehicle speed specifications in meters per second in addition to the current specification in miles per hour (or kilometers per hour for motorcycles). Specifying vehicle speeds to the nearest 0.01 m/s would allow for equivalent vehicle operation relative to current drive schedules. The cycle validation criteria would be based on a speed tolerance of ±1.0 m/s rather than ±2 mph (or rather than the proposed change to a ±2.0 mph tolerance). This is not a direct unit conversion, but is calculated based on the stated precision and rounding allowance to provide a comparable degree of variability in vehicle speeds.

We are proposing to phase in the requirements to use part 1066 test procedures for certifying all sizes of chassis-tested vehicles. For this phase-in approach, all aspects of part 1066 related to PM testing must be met at the start of MY 2017 for vehicles certifying to the PM standards. All other aspects of part 1066 must be met starting with the certification of all MY 2022 vehicles.

As described in Section IV.D, we are proposing new test fuel specifications for E15 gasoline test fuel in 40 CFR part 1065. The test fuels specified for natural gas and liquefied petroleum gas, while not used for very many engine families, are currently following different specifications under 40 CFR part 86 and part 1065. We request comment on further revising 40 CFR part 86 to refer to the test fuel specifications in part 1065 for natural gas and liquefied petroleum gas.

The proposal also includes various technical amendments to 40 CFR part 1065. The proposed technical amendments have no effect on the stringency of the regulations. These revisions include several minor changes to clarify regulatory requirements, align with chassis-testing procedures where appropriate, and correct typographical errors.

2. Reduced Test Burden

We are proposing to update the regulatory provisions that allow manufacturers to omit testing for certification, in-use testing, and selective enforcement audits in certain circumstances. Sections IV.A.3, IV.B.6, and IV.E.3 describe how this applies for demonstrating that vehicles meet the Tier 3 p.m. standards. We are also proposing to allow manufacturers to omit PM measurements for fuel economy and GHG emissions testing that goes beyond the testing needed for certifying vehicles to the Tier 3 standards. Requiring such measurement would add a significant burden with very limited additional assurance that vehicles adequately control PM. We are also proposing to allow manufacturers to ask us to omit PM and formaldehyde measurement for selective enforcement audits. If there is a concern that any type of vehicle would not meet the Tier 3 p.m. or formaldehyde standards, we would not approve a manufacturer's request to omit measurement of these emissions during a selective enforcement audit.

The regulations currently allow for waived formaldehyde testing for gasoline- and diesel-fueled vehicles. The Tier 3 NMOG+NO_X emission standards are stringent enough that it is unlikely that vehicles would comply with the NMOG+NO_X standards while exceeding the formaldehyde standards. We are therefore proposing to continue this waiver practice, such that manufacturers of Tier 3 vehicles do not need to submit formaldehyde data for certification.

We are also requesting comment on rearranging the default testing specification for certifying vehicles to evaporative emission standards, as described in Section IV.C. This would involve requiring manufacturers to perform testing with the two-day test sequence, while making the three-day test sequence optional.

3. Miscellaneous Provisions

The following additional certification and compliance provisions are included in the proposed rule:

- The certification practice for assigned deterioration factors which are available for both small volume manufacturers and small volume test groups has matured significantly since it was first adopted. We are proposing to revise § 86.1826 to more carefully reflect the current practice. For example, the regulations specify that manufacturers with sales volumes between 300 and 15,000 units per year should propose their own deterioration factors based on engineering analysis of emission data from other families. We believe it is best for EPA to develop a set of assigned deterioration factors that can apply to all small volume manufacturers and small volume test groups.
- The regulations in 40 CFR part 86 rely on rounding procedures specified in ASTM E29. This standard is revised periodically. The newer versions are not likely to change in a way that affects the regulation, but the updates make it difficult to maintain a coordinated reference to the current protocol. We are proposing to address this by specifying that the rounding protocol described in 40 CFR 1065.20(e) applies, unless specified otherwise. We are not proposing to change all the references in part 86; rather, we are proposing to define ''round'' in subparts A and S to have the meaning given in 40 CFR part 1065 so that all new regulatory text would rely on this new description. The rounding specifications in 40 CFR part 1065 are intended to be identical to those in the latest versions of ASTM E29 and NIST SP811. For example, this now includes procedures for nonstandard rounding, such as rounding to the nearest 25 units, or the nearest 0.05, where that is appropriate.
- Independent Commercial Importers (ICIs) are companies that import specialized vehicles into the U.S. and are subject to EPA requirements specified in Part 85, Subpart P. The standards which apply to the vehicles imported depend, in part, on the model year of the vehicle being imported. Therefore, vehicles imported by ICIs in the future could be subject to the proposed Tier 3 standards and the proposed regulations reflect the application of the Tier 3 standards to ICIs. Because all existing ICIs are small-volume manufacturers, the Tier 3 standards would not apply until 2022 at the earliest. In addition, the certification practices for ICIs have matured significantly since they were first adopted. EPA is proposing two changes to update the regulations affecting ICIs. First, the proposed provisions would require ICIs to use electric dynamometers when running exhaust emission tests. Electric dynamometers have been required for many years for vehicle manufacturers and EPA believes it is time to require such test equipment for ICIs in the future. In cases where an ICI can demonstrate that they will incur a substantial increase in compliance costs, the proposed regulations include a provision that allows EPA to approve requests, on a case-by-case basis, to allow testing on other types of dynamometers until the ICI is able to comply with the proposed electric dynamometer requirements. Second, we are proposing to incorporate into regulation that ICIs be allowed to use a specific set of reduced testing requirements for up to 300 units each year that have been modified to a U.S.-certified configuration. This has been allowed for ICIs since 1999 and was approved under EPA's authority to establish equivalent alternate test

procedures.[337] Instead of running a full set of emission tests, the reduced testing requirements would allow ICIs to run an FTP for exhaust emissions, a highway fuel economy test, and a shortened one-hour evaporative emission tests for hot-soak and diurnal emissions that applied prior to the current enhanced evaporative emission test procedures. We do not believe the proposed changes should have any significant cost impacts on ICIs. Most of the ICIs have electric dynamometers or can upgrade them for a relatively small cost. The reduced testing burden provisions keep the cost of testing low, compared to the cost of running a full set of emission tests that otherwise could be required.

• We are proposing to adopt CARB's onboard diagnostic requirements for all light-duty vehicles, light-duty trucks, and heavy-duty vehicles, as described in Section IV.C.5.d. We currently allow for this as an option, but almost all manufacturers do this already to avoid certifying multiple systems. Now that we are adopting evaporative provisions that depend on California's regulatory specifications and we are making efforts to adopt a single, national regulatory program, we believe this is an appropriate step. This proposal includes heavy-duty vehicles above 14,000 lbs GVWR, though these vehicles would not need to meet the new requirements related to leak testing. These changes would apply starting in model year 2017 for vehicles subject to Tier 3 standards. The changes apply directly for heavy-duty vehicles above 14,000 lbs GVWR, since all those vehicles are already certified based on CARB's regulations. In the case of alternative fuel conversions, we are proposing to continue to apply the requirements of 40 CFR 86.1806–05.

4. Manufacturer In-Use Verification Testing (IUVP) Requirements

The fuel on which a vehicle will be operated in-use and tested is considered an integral part of the vehicle emission control system design. The Tier 2 program recognized that to achieve the desired emission reductions, vehicles must operate on the same fuel that the emission control system was originally designed to encounter in-use and during testing. In the Tier 2 program, we acknowledged that during the transition of the in-use fuel from sulfur levels of 300 ppm to the required 30 ppm average level, vehicles designed for 30 ppm could encounter in-use sulfur levels well above the level for which their emission control systems were designed. To address this issue, we allowed manufacturers, with agency approval, to perform specific preconditioning test procedures during the IUVP testing to ensure that potential exposure to high sulfur fuel in-use would not impact the emission test results. These procedures included specific drive cycles or maneuvers not regularly encountered during normal in-use operation that would result in removal of sulfur contamination from the emission control system.

Consistent with the Tier 2 program, EPA continues to recognize the importance of the fuel to the emission control system design, particularly on Tier 3 vehicles designed to meet the most stringent emission levels of the program (i.e., Bin 70 and cleaner). Under EPA's proposal, in-use fuel would transition from an average sulfur level of 30 ppm required by Tier 2 to a new average level of 10 ppm under Tier 3. The proposed sulfur requirements would be average standards. Thus, even after the transition to the 10 p.m. average sulfur level, vehicles might still encounter sulfur levels during in-use operation above 10 ppm and as high as the 95 ppm cap, which could adversely impact the emission control system. Tier 3 vehicles tested by manufacturers in IUVP that have been exposed to such sulfur levels could experience sulfur-related impacts, which in turn could cause the vehicle to temporarily exceed emission standards.

To address the potential emission impact on Tier 3 vehicles from exposure to higher sulfur levels, we are proposing some modifications to the IUVP testing process based in part on what was allowed under the Tier 2 program. Tier 3 vehicles tested in the IUVP would be tested initially without allowing any sulfur cleanout procedure, such as a US06 test run prior to the FTP or Highway Fuel Economy (HFET) tests. If a vehicle failed the NMOG+NO_X standard for the FTP or HFET cycle during the initial round of testing, manufacturers would be allowed to perform a sulfur cleanout procedure before repeating the FTP or HFET. For the sulfur cleanout, manufacturers would be allowed to perform up to two US06 cycles. The measured US06 cycle and a preconditioning US06 cycle, if performed as part of the initial measured tests would serve as the cleanout procedure and therefore no additional US06 cycles would be allowed. Alternative sulfur cleanout procedures would require approval by EPA. Following the sulfur cleanout procedure, the manufacturer would prep and soak the vehicles and then repeat the FTP and HFET tests. If a manufacturer chose to perform the sulfur cleanout procedure, it would be required to submit evidence that the vehicle encountered high sulfur levels in the fuel just prior to emission testing. This would include an analysis of a fuel sample from the vehicle fuel system as received from in-use operation just prior to testing. If the fuel sample indicated that the vehicle was operating on fuel containing 15 ppm or higher sulfur levels in the recent past, only the emission results of the tests following the cleanout procedure would be used for purposes of determining emission compliance and whether to enter the in-use compliance program (IUCP).

The proposed rule includes the changes to the IUVP testing described above for light-duty vehicles and MDPVs. The changes to IUVP testing are not applicable to heavy-duty vehicles tested in the IUVP program. Also, as described in Section IV.D, we are proposing to incorporate leak testing into the IUVP test protocol. We are not proposing additional changes to the overall IUVP test program.

V. Proposed Fuel Program

Under today's Tier 3 program, we are proposing reductions in gasoline sulfur levels nationwide. These standards would help prevent the significant impairment of the emission control systems expected to be used in Tier 3 technology, significantly improve the efficiency of emissions control systems currently in use, and continue prevention of the substantial adverse effects of sulfur levels on the performance of vehicle emissions control systems. Section V.A provides an overview of the fuel program and how we arrived at the proposed gasoline sulfur standards. Section V.B presents our assessment of the impacts the proposed fuel program would have on stationary source permitting and our conclusion that the proposed refinery lead time is adequate. Section V.C contains our proposed standards for denatured fuel ethanol. In Section V.D, we introduce and seek comment on possible options for regulating gasoline-ethanol blends intended for flexible fuel vehicles. Section V.E presents the proposed program flexibilities including the averaging, banking, and trading (ABT) program as well as small refiner and small volume refinery provisions. Section V.F lays out the compliance provisions for the proposed Tier 3 gasoline program. Finally, Section V.G presents our statutory authorities for lowering gasoline sulfur. As a result of these proposals, we have to amend certain existing provisions in the current Tier 2 requirements at 40 CFR

[337] See 40 CFR 86.106–96(a) and Enclosure 2 to EPA Guidance letter CCD–02–04, February 6, 2002.

part 80. We are not reopening Tier 2 and our proposed amendments should not be construed as a reopener.

A. Proposed Tier 3 Gasoline Sulfur Standards

1. Overview

a. History of Sulfur Control

Sulfur is naturally occurring in crude oil. Crude oil containing higher concentrations of sulfur (i.e., greater than 0.5 percent) is called ''sour'' and crude containing lower sulfur concentrations (e.g., West Texas Intermediate) is referred to as ''sweet.'' Regardless of the concentration, because sulfur is naturally occurring in crude oil, it is also naturally occurring in gasoline. As discussed in Section IV.A.6, sulfur impairs the performance of today's vehicle emission control technologies (i.e., precious metal catalytic converters), reducing the emission benefits of current and advanced vehicles. As explained below, in 2000 EPA took action to reduce gasoline sulfur levels under what is known as the Tier 2 Program [338] and is proposing to take further action under the proposed Tier 3 Program.

Tier 2 was a major, comprehensive program designed to reduce emissions from passenger cars, light trucks, and large passenger vehicles (including sport utility vehicles, minivans, vans, and pick-up trucks) and the sulfur content of gasoline. Under this program, automakers were required to manufacture low-emission vehicles when operated on low-sulfur gasoline, and refiners were required to produce low-sulfur gasoline nationwide.

Required reductions in gasoline sulfur began in 2004 with refinery and importer caps of 300 ppm and a corporate average cap of 120 ppm. For most refiners and importers, compliance with the final sulfur standards (30-ppm annual average and 80-ppm per gallon cap) was required beginning in 2006. Due to extensions provided for some refineries under the ultra-low sulfur diesel program, final compliance for all U.S. refineries was January 1, 2011. The Tier 2 gasoline sulfur program also had an ABT program that allowed companies to generate credits for implementing the required changes earlier than required and allowed ongoing flexibility to meet the 30-ppm average sulfur standard.

At full implementation, the Tier 2 program (treating vehicles and fuels as a system) required passenger vehicles to be over 77 percent cleaner and gasoline sulfur to be reduced by up to 90 percent from pre-program levels.

b. Need for Additional Gasoline Sulfur Control

We are proposing to lower today's gasoline sulfur standards under Clean Air Act section 211(c)(1). This is because emission products of gasoline with current levels of sulfur cause or contribute to air pollution which may reasonably be anticipated to endanger public health or welfare and impair to a significant degree the emissions control device or systems on the vehicles subject to the proposed Tier 3 standards. For more on our legal authority to set gasoline sulfur standards, refer to Section V.G.

As explained in Section IV.A.6, robust data from many sources shows that gasoline sulfur at current levels (i.e., around 30 ppm on average) continues to degrade vehicle catalytic converter performance during normal operation. The most significant problem is for NO_X. Today's proposed NMOG+NO_X vehicle emission standards, an 80 percent reduction from current Tier 2 standards, would not be possible without the gasoline sulfur controls we are proposing today. Tier 3 vehicles must achieve essentially zero warmed-up NO_X emissions to comply and maintain this performance for up to 150,000 miles. An increase in emissions of only a few milligrams per mile due to sulfur could make compliance impossible for some vehicles. The standards are projected to be especially challenging for larger SUVs and pick-up trucks.

Reducing gasoline sulfur would also help reduce emissions of pollutants that endanger public health and welfare from vehicles already on the road today. For the Tier 2 rule, we had data that showed benefits of reducing gasoline sulfur, but little to no data existed for sulfur levels below 30 ppm that we could use to project continued emission reductions. Since then, we have tested a wide range of Tier 2 vehicles to better understand the impact that even lower gasoline sulfur could have on emissions. Our test data showed significant NO_X and VOC reductions when vehicles were tested on ultra-low sulfur gasoline. As explained in more detail in Section III.B, lowering average gasoline sulfur from 30 to 10 ppm would result in approximately 280,000 less tons of NO_X and 40,000 less tons of VOC. The projected in-use emission benefits would occur almost immediately in 2017 when the Tier 3 gasoline sulfur standards take effect.

c. Summary of Proposed Tier 3 Fuel Program

Under today's Tier 3 fuel program, we are proposing that gasoline and any ethanol-gasoline blend contain no more than 10 ppm sulfur on an annual average basis beginning January 1, 2017. Similar to the Tier 2 gasoline program, the proposed Tier 3 program would apply to gasoline in the United States and the U.S. territories of Puerto Rico and the Virgin Islands, excluding California. The program, when finalized, would result in gasoline that contains an average of two-thirds less sulfur than it does today. We are proposing a three-year delay for small refiners and small volume refineries. Eligible small refining entities, described in more detail in Section V.E.2, would have until January 1, 2020 to comply with the new sulfur standards.

We are proposing an ABT program that would allow refiners to optimize their investment strategies to enable reduction in capital and compliance costs. Refiners and importers overcomplying with the 10-ppm standard beginning January 1, 2017 could generate standard credits that could be used internally, banked, or traded to other companies. We are also proposing an early credit program that would allow refiners and importers to spread out their investments over time to allow for an orderly transition. Starting January 1, 2014, refiners and importers taking steps to reduce gasoline sulfur below the current 30-ppm standard could generate early credits that could be used to postpone final investments for up to three years. For a more detailed discussion of the proposed ABT program, refer to Section V.E.1. As a result of the early credit program and notwithstanding the proposed delay offered to small refiners and small volume refineries, we anticipate considerable reductions in gasoline sulfur levels prior to 2017, with final refinery steps to get to 10 ppm occurring on or before January 1, 2020.

We are proposing to either maintain the current 80-ppm refinery gate per-gallon cap and 95-ppm downstream per-gallon cap or lower them to 50 and 65 ppm, respectively. We also evaluated and are seeking comment on the potential of lowering these caps to 20 ppm and 25 ppm, respectively. There are advantages and disadvantages associated with the various sulfur cap options (explained in more detail in Section V.A.3), but under all the proposed options, we believe that the stringency of the 10-ppm annual average

[338] 67 FR 6698 (February 10, 2000).

standard would result in reduced gasoline sulfur levels nationwide.

A summary of the proposed Tier 3 gasoline sulfur standards is presented below in Table V–1. Domestic refiners and gasoline importers would be subject to both the 10-ppm annual average sulfur standard and the refinery gate per-gallon cap, when finalized. Gasoline in the distribution system (i.e., at terminals, retail stations, etc.) would be subject to the downstream per-gallon cap. For more information on how we arrived at the proposed sulfur standards, refer to Sections V.A.2 and V.A.3.

TABLE V–1—PROPOSED TIER 3 GASOLINE SULFUR STANDARDS

	Cap Option 1		Cap Option 2	
	Limit	Effective	Limit	Effective
Refinery annual average standard	10 ppm	January 1, 2017 [a]	10 ppm	January 1, 2017.[a]
Refinery gate per-gallon cap	80 ppm	Already	50 ppm	January 1, 2020.
Downstream per-gallon cap	95 ppm	Already	65 ppm	March 1, 2020.

[a] Effective January 1, 2020 for eligible small refiners and small volume refineries.

d. Refinery Feasibility

While evaluating the merits of a national gasoline sulfur program to reduce emissions and enable future vehicle technologies, we also considered the refining industry's ability to reduce sulfur to 10 ppm on average by January 1, 2017 and the associated costs (for more on fuel costs, refer to Section VII.A). Based on information gathered from numerous stakeholder meetings, discussions with vendor companies that provide the gasoline desulfurization technologies, as well as the results from our refinery-by-refinery modeling, we believe it is technologically feasible at a reasonable cost for refiners to meet the proposed sulfur standards in the lead time provided. A summary of our feasibility analysis is presented below. For more on our fuels feasibility assessment and refinery modeling, refer to Chapters 4 and 5 of the draft RIA.

Gasoline desulfurization technologies are well known and readily available. Many technologies were demonstrated under Tier 2 and have been further demonstrated by current fuel programs in California, Japan, and Europe. Under California's Phase 3 Reformulated Gasoline program (CaRFG3), gasoline sulfur is limited to 15 ppm on average with a 20-ppm per-gallon cap.[339] California reduced their per-gallon cap in phases from 60 ppm effective December 31, 2003, to 30 ppm effective December 31, 2005, to 20 ppm effective December 31, 2011. Actual in-use gasoline sulfur levels, however, have been largely constrained by the Predictive Model that California refiners are using to demonstrate compliance. As a result, gasoline sulfur levels are lower than the CaRFG3 limits. Based on the Predictive Model, California gasoline contained approximately 10 ppm sulfur on average in 2010 (9 ppm in the summer and 11 ppm in the winter).

Japan currently has a 10-ppm gasoline sulfur cap that took effect in January 2008. Europe also has a 10-ppm sulfur cap that has been adopted by the 30 Member States that comprise the European Union (EU) and the European Free Trade Association (EFTA) as well as Albania and Bosnia-Herzegovina.[340] Beijing, China also recently introduced a 10-ppm sulfur limit for gasoline.[341] We note, however, that many oil refineries outside of the United States operate differently from their U.S. counterparts. U.S. refiners have invested more heavily in fluidized catalytic cracker (FCC) units than the rest of the world in order to maximize gasoline production. Because the FCC unit is responsible for nearly all the sulfur that ends up in gasoline, many U.S. refineries face a bigger challenge in achieving 10-ppm gasoline sulfur levels. Nevertheless, these international fuel programs (along with California) provide evidence that advanced gasoline desulfurization technologies have been deployed and are readily available to comply with the proposed Tier 3 fuel program.

When considering the proposed Tier 3 sulfur standards, refineries can be grouped into three general categories based on their current post-Tier 2 refinery configurations: those without an FCC unit, those hydrotreating the gasoline stream coming from their FCC unit (i.e., postreating) [342], and those hydrotreating their FCC feed (i.e., pretreating). Most refineries without FCC units would not need to do anything to meet the proposed Tier 3 sulfur standards. Refineries equipped with FCC units that invested in an FCC postreater under Tier 2 would likely just need to revamp (i.e., renovate) their existing unit for a modest cost. Refineries that only have an FCC pretreater would meet the Tier 3 sulfur standards by either revamping their existing pretreaters (perhaps also cutting the heavy portion of FCC naphtha into the diesel pool) or invest in a grassroots FCC postreater. Our refinery-by-refinery modeling suggests that 29 refineries would not need to make any capital changes, 66 would need to revamp their existing FCC postreaters, and 16 would need to add grassroots postreaters (we did not model any undercutting of heavy FCC naphtha into the distillate pool).[343] Refiners that need to install a new postreater would have to make the largest desulfurization investments under Tier 3, typical of many of the refinery investments made under Tier 2. For more on our estimated sulfur control costs, refer to Section VII.B.

We believe that the choice of technology for each refinery is fairly insensitive to capital cost assumptions. Revamping an existing FCC postreater will almost always be the preferred compliance path if it is available. The majority of refineries only have an existing FCC postreater, so revamping it will be the preferred choice, given the much higher capital costs associated with adding grassroots FCC pre or postreaters. The 16 refineries we project would add grassroots postreaters do not have existing postreaters that could be revamped. As a result, their choices are limited to revamping their existing pretreater or installing a grassroots postreater. We believe based on conversations with industry technology vendors and engineering firms that

[339] California Air Resources Board. (2008, August 29). *The California Reformulated Gasoline Regulations,* Title 13, California Code of Regulations, Sections 2250–2273.5. Retrieved from *http://www.arb.ca.gov/fuels/gasoline/082908CaRFG_regs.pdf.*

[340] Hart Energy Consulting. (2011). International Fuel Quality Center: *2011 Worldwide Fuel Specifications*

[341] Article from China.org.cn entitled ''Beijing to implement stricter fuel standards'', May 19, 2012, retrieved from *http://www.china.org.cn/environment/2012-05/19/content_25422404.htm*

[342] Some of them may also have an FCC pretreater.

[343] Our in-house refinery modeling considers 111 operational refineries producing non-California gasoline.

installing a grassroots postreater would be more likely for these refineries, because revamping their pretreater would still incur a significant capital cost and would reduce compliance flexibility. Thus, in the refinery-by-refinery analysis performed by EPA for this proposal, higher capital costs (either directly or thru a higher ROI) would be unlikely to alter the selection of pretreater versus postreater control technology. Higher capital costs would likely impact both technology options proportionally with no overall effect.

We have built in a number of flexibilities that will reduce the compliance burden for refiners. In particular, coupling the proposed 10-ppm annual average sulfur standard with refinery gate and downstream per-gallon caps should continue to allow for batch-to-batch variability, refinery upsets, and turnarounds while still maintaining the overall air quality benefits of the program. For more information on the applicable per-gallon sulfur caps, refer to Section V.A.3.

We are also proposing an ABT program that would allow refiners to spread out their investments over time and achieve compliance in the most cost-effective manner. If some refineries either comply with the 10-ppm standard earlier than required, or reduce sulfur partway toward 10 ppm early, this would allow other refineries to delay compliance for a finite period through the use of early credits. The ABT program would also allow for ongoing company averaging. This would allow some refineries to stay slightly above the standard at the expense of other refineries over complying, resulting in the most cost-effective mechanism for meeting the 10-ppm annual average standard. For more information on the proposed ABT program, refer to Section V.E.1. Finally, our Tier 3 gasoline sulfur program, when final, would allow three years of additional lead time for small refiners and small volume refineries (i.e., refineries processing less than or equal to 75,000 net barrels per day of crude oil). As a group, we believe that these refineries are disproportionally impacted when it comes to their cost of compliance and ability to rationalize investment costs in today's gasoline market. Giving these refineries additional lead time would allow them more time to invest in desulfurization technology, take advantage of advancements in technology, develop confidence in a Tier 3 credit market as a means of compliance, and avoid competition for capital, engineering, and construction resources with the larger refineries. For more on the proposed provisions for small refiners and small volume refineries, refer to Section V.E.2.

The proposed Tier 3 rulemaking should not adversely affect the supply of gasoline in the U.S. This judgment is based on a review of both gasoline and diesel fuel supply when the Tier 2 gasoline sulfur and ultra-low sulfur highway and nonroad diesel rules were phasing in between 2003 and 2011. At the end of this time period, the U.S. gasoline and diesel fuel markets were increasingly being supplied by U.S. refiners, instead of by imports, compared to the beginning of this time period. Most striking is that the more stringent ultra-low sulfur diesel fuel standards showed the largest shift as U.S. refiners not only began to supply more of the U.S. diesel fuel market, but became net exporters of diesel fuel. For more on our fuel supply assessment, refer to Section 5.3 of the draft RIA.

2. Proposed Annual Average Sulfur Standard

In the subsections that follow, we lay out our rationale for proposing a 10-ppm average standard, our assessment of how the proposed ABT program would help with compliance, and our conclusion that the proposed lead time is adequate. In the following section, we explain our rationale behind the proposed sulfur caps and seek comment on potential alternatives.

a. Appropriateness of Proposed 10-ppm Sulfur Standard

As explained in Section IV.A.6, sulfur in fuel oxidizes in the exhaust and coats the sites where chemical reactions can take place on the precious metal catalysts used in vehicles to reduce emissions of VOC, NO_X, PM, CO, and toxics. Accordingly, any sulfur in gasoline causes vehicle emissions to increase. Sulfur can be burned off the catalyst during high-temperature, rich operation of the vehicle (i.e., aggressive driving conditions), but as long as there is any sulfur in the fuel, exhaust emissions will increase. Because any amount of sulfur in the fuel can have this effect, the lower the sulfur the better.

Refiners experience the same phenomenon with precious metal catalysts used in the reformer and isomerization units at their refineries.[344] To protect the precious metal catalysts in these units, refiners reduce the sulfur in the feed to these units to 1 ppm or below. Thus, it is technically possible for refiners to reduce their gasoline sulfur levels to virtually zero. While refiners did not have reason to reduce the sulfur in FCC gasoline until Tier 2 required such reductions, some refiners have achieved reductions in this stream at some of their refineries for other reasons such as (1) Protecting the FCC catalyst from the contaminants in the gas oil feed, (2) reducing stack emissions from the regenerator of the FCC unit, and most importantly (3) increasing gasoline yields from the FCC unit. For most refineries, FCC gasoline accounts for about one-third of gasoline and before Tier 2 was the source of over 95 percent of the sulfur in gasoline. Under Tier 2, most refiners significantly desulfurized FCC gasoline to around 70 to 80 ppm, yet FCC gasoline continues to contribute the majority of sulfur in gasoline today.

While further reducing sulfur in gasoline will continue to reduce vehicle emissions, our emissions analysis shows that a 10-ppm annual average is sufficient to enable vehicles to reach the proposed Tier 3 standards. Moreover, for the following reasons, reducing sulfur further below 10 ppm becomes increasingly difficult and costly. First, FCC naphtha is very rich in high-octane olefins. As the severity of desulfurization increases, more olefins are saturated, further sacrificing the octane value of this stream and further increasing hydrogen consumption. Making up for this lost octane represents a significant portion of the sulfur control costs. Second, as desulfurization severity increases, there is an increase in the amount of sulfur removed (in the form of hydrogen sulfide) which recombines with the olefins in the FCC naphtha, thus offsetting the principal desulfurization reactions. There are means to deal with the recombination reactions, but they result in even greater capital investments. Third, while FCC gasoline contributes the majority of sulfur to the finished gasoline, as the sulfur level drops below 10 ppm, the sulfur level of the various other gasoline streams within the refinery also become important. Any necessary treatment of these additional streams increases both capital and operating costs.

U.S. refineries are currently in different positions, both technically and financially. In general, they are configured to handle the different crude oils they process and turn it into a widely varying product slate to match available markets. Those processing heavier, sour crudes would have a more challenging time reducing gasoline sulfur under the proposed Tier 3 program. As explained earlier, refineries have different sulfur levels in their non-

[344] Together, the streams from the reformer and isomerization units account for approximately one-third of gasoline.

FCC streams based on their feedstocks and configurations. Those with higher sulfur levels in other refinery streams would have a more difficult time desulfurizing gasoline. Perhaps most important, U.S. refineries vary greatly in size (atmospheric crude capacities range from less than 5,000 to more than 500,000 barrels per day) and thus have different economies of scale for adding capital to their refineries. As such, it can be less costly per gallon for some larger refineries to get down to 10 ppm than for smaller refineries, as discussed in Chapter 5 of the draft RIA. As a result, under a 10-ppm average standard, the flexibility afforded by the ABT program helps those refineries with very high costs. They have the option of staying above 10 ppm if they can acquire credits from other refineries that were able to lower their sulfur level below 10 ppm. However, if the gasoline sulfur standard were to be 5 ppm, this would essentially end the ability of refiners to average sulfur reductions across their refineries. There simply would not be enough opportunity to generate credits below 5 ppm. As discussed in Chapter 5 of the draft RIA, to estimate the costs for a 10-ppm annual average standard where some refineries stay above 10 ppm, we also estimated the costs for refineries to get down to 5 ppm. To do so, we estimated that sulfur control costs would increase by at least 50 percent compared to the proposed 10-ppm standard, which is over two times more costly per ppm-gallon of gasoline sulfur reduced. This 5-ppm cost assessment is reasonable for those refineries that would likely generate credits under a 10-ppm average standard as these refineries are most likely in the best position for achieving such low sulfur levels. However, were we to actually assess the costs of a 5-ppm standard, at least some of these refineries would likely have additional costs for controlling the sulfur in other gasoline blendstocks, and we would likely apply a higher overdesign factor to account for industry-wide compliance at 5 ppm. More detailed refinery information may be needed for such an analysis but, for the more challenged refineries, a 5-ppm standard could potentially be cost prohibitive. A 5-ppm standard would also introduce further costs to address the contribution to gasoline sulfur from gasoline additives, transmix, ethanol denaturants, and contamination in the distribution system. Therefore, a 10-ppm annual average standard appears to be the point which properly balances feasibility with costs. Also, for these reasons, EPA believes that a viable ABT program is important to the success of the proposed Tier 3 fuels program (explained in more detail in Section V.A.2.b).

Finally, as discussed in Section IV.A.6, reducing sulfur below 10 ppm would further reduce vehicle emissions and allow the proposed Tier 3 vehicle standards to be achieved more easily. However, we believe that a 10-ppm average standard will be sufficient to allow vehicles to meet the proposed Tier 3 standards. The level of the Tier 3 standards was considered in light of a 10-ppm average sulfur level for gasoline. If we were to consider lowering sulfur further, we would then also have to consider reducing the vehicle standards further. Given the challenges associated with sulfur reductions below 10 ppm as discussed above, we do not believe this would be appropriate.

b. How Would the Proposed ABT Program Assist With Compliance?

As described more fully in Section V.E.1, we are proposing an ABT program that would reduce the average compliance burden for gasoline producers and importers. This program would permit the generation of credits by refineries that reduce their annual average sulfur level below 10 ppm, and transfer of these credits to other refineries to reduce or eliminate their need to make capital investments to meet the 10-ppm standard. The ABT program would thus provide refiners with multiple approaches to compliance, and each could choose the approach that minimizes their costs.

We modeled an ABT program to estimate how it would affect compliance. As described in more detail in Section VII.B.4, our modeling determined the lowest cost approach on a refinery-by-refinery basis under two scenarios: an idealized scenario in which every refinery has the opportunity to make credit transfers with every other refinery in the nation, and a more limited scenario in which credit transfers would only occur within companies that own more than one refinery. Today a significant fraction of Tier 2 sulfur credits are transferred within companies, but there is still a considerable amount of inter-company trading occurring.[345] Thus, assuming no trading between companies is a conservative assumption and the real impact is likely to be somewhere in between the two scenarios. Table V–2 describes how compliance would be affected under these two scenarios.

TABLE V–2—IMPACTS OF NATIONWIDE ABT PROGRAM ON COMPLIANCE

	ABT with nationwide credit transfers	ABT with intra-company credit transfers
Number of refineries that generate credits	46	18
Number of refineries that consume credits	25	8
Number of refineries that neither generate nor consume credits	40	85
Total modeled refineries	111	111

Based on our ABT modeling, we believe that a significant number of refineries would take advantage of the opportunity to generate or use credits, thus lowering their compliance burden under the proposed 10-ppm annual average standard. For a more complete discussion of our analysis of the proposed ABT program, refer to Chapter 5 of the draft RIA.

c. Adequacy of Proposed Refinery Lead Time

Given the complexity of gasoline refining, numerous planning and action steps would be required for refiners to complete the refinery changes needed to comply with the proposed Tier 3 sulfur standards. The steps required to implement these changes include: the completion of scoping studies, financing, process design for new or revamped refinery units or subunits, permitting, detailed engineering based

[345] Based on Tier 2 sulfur compliance data, of the 26 companies that obtained sulfur credits in 2010, eight obtained credits only from their own company, and another five obtained credits both from their own company and from other companies. The remainder obtained credits only from other companies.

upon the process design, field construction of the gasoline sulfur reduction facilities, and start-up and shakedown of the newly installed desulfurization equipment.

We conducted a thorough lead time analysis in which we sequenced the estimated time to complete scoping studies, process design, permitting, detailed engineering, field construction, and start-up and shakedown in advance of production based upon the methodology used in our recent gasoline and diesel rules.

For the proposed Tier 3 gasoline sulfur program, we estimated refinery lead times step-by-step for the construction of new grassroots FCC postreaters and the revamp of existing pre and postreaters. For each refinery project type, we estimated lead times for scoping studies, process design, permitting, detailed engineering, field construction, and start-up and shakedown. Estimated required lead times for scoping studies are six months. Process design ranged from six months for desulfurization equipment revamping to nine months for a grassroots postreater. It is during the process of performing their scoping studies and process design analysis that refiners would complete their permit applications.

Based on discussions with refiners, a review of the permitting experience for Tier 2 and our current analysis, we estimated that permitting for desulfurization equipment revamping and the construction of a grassroots postreater would take 9 months. However, we estimated the overall lead-times for Tier-3-related revamps to be considerably shorter, as described below. The estimates for permitting time are consistent with those of EPA's Office of Air Quality Planning and Standards (OAQPS) and our regional offices, both of which have engaged in extensive dialog with potentially affected parties. A discussion of the permitting implications of Tier 3 is contained in Section V.B of the preamble. Detailed engineering efforts were estimated to require six months for desulfurization equipment revamping and nine months for grassroots postreaters. Field construction was estimated to require six months for revamped pre-and postreaters and 12 months for grassroots postreaters. Start-up and shakedown processes were estimated to require six months for revamped FCC treaters and 9 months for grassroots postreaters. There is some degree of overlap among each of these steps as shown in Table V–3.

To allow refiners to complete all these different steps and comply with the 10 ppm average gasoline sulfur standard, assuming the Tier 3 proposal were to be finalized by the end of 2013, we would be providing three years of lead time. In addition to the three years of lead time, the proposed rulemaking also provides additional flexibility provided by the ABT program, small refinery delays, and hardship provisions. To support this timeline, we conducted several analyses of the expected refinery lead time requirements associated with the proposed Tier 3 standards and found that refinery operators would have more than adequate time to implement the required refinery charges. A justification for proposed timeline appears below.

Complying with Tier 3 is expected to involve some grassroots FCC postreaters, but mostly we believe that refiners will revamp existing FCC postreaters. Revamping of existing FCC postreaters can be accomplished in approximately 2 years, or less (See Table V–3). Grassroots FCC postreaters are expected to require on average about three-years to install and start-up (See Table V–3). In comparision to FCC pretreaters, hydrocrackers and distillate hydrotreaters, FCC postreaters are much less costly, low pressure units that take less time to scope out, require shorter lead times for ordering the equipment, and less time to install. Furthermore, the grassroots FCC postreaters to be installed for Tier 3 are expected to be in a moderate to light desulfurization service because the refineries they will be installed in will already be complying with Tier 2 using an FCC pretreater. FCC naphtha from a refinery with an FCC pretreater is expected to only contain about 100 ppm sulfur. To comply with Tier 3, refiners installing these grassroots FCC postreaters would only need to desulfurize the FCC naphtha down to 25 ppm (about a 75% reduction). In comparison, a single-stage FCC postreaters would have to desulfurize FCC naphtha from as high as 2400 ppm sulfur down to 25 ppm, a 99% sulfur reduction. The more moderate desulfurization service of the grassroots FCC postreaters needed to comply with Tier 3 would be expected to streamline the scoping and design work.

Table V-3 Anticipated Compliance Timelines

		Months														
		0-3	3-6	6-9	9-12	12-15	15-18	18-21	21-24	24-27	27-30	30-33	33-36	36-39	39-42	42-45
Revamp Pre- & Postreaters	Scoping Studies	■	■													
	Process Design		■	■												
	Permitting			■	■	■										
	Detailed Engineering				■	■										
	Field Construction						■	■								
	Start-up / Shakedown							■	■							
Grassroots Postreater	Scoping Studies	■	■													
	Process Design		■	■	■											
	Permitting			■	■	■										
	Detailed Engineering					■	■	■								
	Field Construction							■	■	■	■					
	Start-up / Shakedown										■	■	■			

It is useful to compare the proposed lead time for Tier 3 to what was provided for Tier 2. In the case of the Tier 2 standard, we provided a three-year lead time along with an ABT program and other flexibilities to ease compliance. Refiners, though, commented that the three year timeline that we provided was not enough time. For the Tier 2 analysis, we assumed that refiners would solely install low-pressure FCC postreaters, which we believe could be scoped out, designed, installed and started up within a 3 year time period. However, many refiners complied with Tier 2 by installing high-pressure FCC pretreaters which require long lead times for the procurement of the required equipment. Furthermore, those refiners that did not install high-pressure FCC pretreaters instead installed grassroots FCC postreaters, many of which were designed for severe desulfurization service. An additional difference between Tier 3 and Tier 2 is that for Tier 3 we expect the installation of only 16 grassroots units, along with many revamps, but for Tier 2 virtually all refiners installed both grassroots FCC pretreaters and postreaters. The demands on the desulfurization vendors for scoping studies, and on the E & C industry for design and construction, and on the refiners to train their operations staff and start up the new units, was a lot greater for Tier 2 than what we would expect for Tier 3. The total estimated investment cost for Tier 2 versus Tier 3 also highlights the difference in investment demands.

The total investment for Tier-2 desulfurization processing units was estimated to be about $6.1 billion, while the total investment for Tier-3 desulfurization processing units is estimated to be about $2.1 billion. This simple comparison helps to illustrate that the proposed Tier 3 would be easier for refineries to obtain necessary permits, secure engineering and construction (E&C) resources, install new desulfurization equipment and make all necessary retrofits to meet the proposed sulfur standards.

We assessed the permitting situation in more detail working in conjunction with the Office of Air Quality, Planning and Standards (OAQPS). Since the permitting process has little impact on the overall cost of compliance with Tier 3, it is an issue primarily in terms of its potential impact on the time needed to complete the necessary refinery modifications. On a refinery-by-refinery basis, we provided OAQPS estimates of the additional heating demands for the new and revamped units per the desulfurization vendor submissions. OAQPS was able to project which refineries would likely trigger NO_X, particulate matter and greenhouse gas emission permitting limits, which would likely lengthen the permitting process as refiners would need to offset the projected emission increases. As it turns out, only 2 of the 16 refineries which are projected to install grassroots units were projected to exceed particular permitting limits, and these solely did so based on the most conservative assumption that each would produce all the additional hydrogen on site using hydrogen plants (as opposed to using existing reforming capacity) and produce the electricity on site, to satisfy the needs of the new desulfurization equipment. When we provided a second heat demand estimate to OAQPS which assumes that refiners purchase their hydrogen and electricity from third parties, none of the refineries which we projected would install grassroots units was projected to have emission increases which would require offsets. Thus, many of the grassroots units that we project would be installed may end up with a streamlined permitting process. We seek comment on our estimates of the number of refineries that may trigger the need for new permits and the length of time necessary to obtain the various

types of permits that may be required once the refiner applies for them.

The various flexibilities that the proposed Tier 3 rule provides to refiners provide refiners additional time for complying. These flexibilities include the ABT program, the small refiner delay provisions and the hardship provisions. The ABT program allows a refiner, either within its own company or by purchasing credits on the open market, to delay higher investment cost investments, such as the investments in grassroots FCC postreaters, which would provide additional lead time for installing these units. This would occur if refiners would reduce the sulfur levels of their gasoline through operational changes or revamps of their existing FCC pretreaters and postreaters when the ABT Program begins in 2014. Potentially every refinery with either an FCC pretreater or an FCC postreater may be capable of generating early credits. Furthermore, we project that 66 refineries would revamp their existing FCC postreaters to comply with Tier 3. Since revamps can be completed within two years or less, these refiners could potentially begin generating early credits during 2016, or before if refiners begin each of these revamps in early 2014. During the period between 2014 and 2017, these refineries which reduce their gasoline sulfur levels below that required by Tier 2 would generate credits. Refineries with higher cost capital investments, such as the grassroots FCC postreaters, could then delay making those investments through the purchase of credits. We estimate that sufficient credits could be genereated early to allow many of these refineries to delay compliance until as late as 2020. The quantitative early credit analysis that we conducted showed that if refiners with an existing pretreater or postreater would generate early credits by lowering their gasoline sulfur down to 20 ppm starting in 2014 and if revamps were started up in 2016, one year before the program start date, that almost 6 times more credits would be available to offset the early credit demand by the refiners installing grassroots postreater units, assuming that they start up those units in 2018. Even if all grassroots postreaters were assumed to not start up until 2020, there would be almost 4 times more early credits available to those refiners installing grassroots postreaters assuming that the same early credit generation scenario would occur.

Additional flexibility is also provided by the small refineries provisions which delays compliance by the refineries that refiner less than a net of 75,000 barrels of crude oil per day until 2020. Three of the 16 FCC postreater grassroots units that we project will be installed would be by small refineries. However, small refineries could also decide to comply early and generate credits starting as early as 2014.

As in previous fuel programs, we are proposing hardship provisions to accommodate a refiner's inability to comply with the proposed standard at the start of the Tier 3 program, and to deal with unforeseen circumstances that may occur at any point during the program. These provisions would be available to all refiners, small and non-small, though relief would be granted on a case-by-case basis following a showing of certain requirements; primarily that compliance through the use of credits was not feasible. We are proposing that any hardship waiver would not be a total waiver of compliance; rather, a hardship waiver would be short-term relief that would allow a refiner facing a hardship situation to, for example, receive additional time to comply. This hardship provision would allow a refiner to seek a delay in the case that there was insufficient time to comply.

Finally, we believe that in reality, less leadtime than shown in Table V–3 would actually be necessary. We held discussions with many refiners during 2011, and so they have been well aware of Tier 3 and are familiar with the likely requirements. During our subsequent discussions with technology vendors and engineering firms, they explained to us that many refiners have already initiated, and by now, likely completed their scoping studies. Thus, actual time needed for designing, installing and starting of new desulfurization equipment for Tier 3 times would be even less than what we projected because many refineries may have already completed required scoping studies in anticipation of the Tier-3 standards. Moreover, lead times for those refineries that have yet to start the scoping process can also be expected to decrease, since fewer refineries will be competing for the services of the desulfurization vendors. We request comment on the amount of lead time that we are providing refiners to scope, design, permit, construct and start-up a grassroots desulfurization unit, considering all the proposed flexibilities which allow refiners to stagger their capital investments and ease compliance.

As in prior rules, we also evaluated the capability of E&C industries to design and build gasoline hydrotreaters as well as performing routine maintenance. Two areas where it is important to consider the impact of the fuel proposed sulfur standards are: (1) Refiners' ability to procure design and construction services and (2) refiners' ability to obtain the capital necessary for the construction of new equipment required to meet the new gasoline quality specification. We evaluated the requirement for engineering design and construction personnel in a manner consistent with the Tier 2 analysis, particularly for three types of workers needed to implement the refinery changes: front-end designers, detailed designers, and construction workers. We developed estimates of the maximum number of each of these types of workers needed throughout the design and construction process and compared those figures to the number of personnel currently employed in these areas.

The number of job hours necessary to design and build individual pieces of refinery equipment and the job hours per piece of equipment were taken from Moncrief and Ragsdale.[346] Their paper summarizes analyses performed in support of a National Petroleum Council study of gasoline desulfurization, as well as other potential fuel quality changes. The design and construction factors for desulfurization equipment are summarized in Table V–4.

TABLE V–4—DESIGN AND CONSTRUCTION FACTORS

Gasoline Refiners:	
Number of New Pieces of Equipment per Refinery	60
Number of Revamped Pieces of Equipment per Refinery	15
Job Hours Per Piece of New Equipment: [a]	
Front End Design	300
Detailed Design	1,200
Direct and Indirect Construction	9,150

[a] Revamped equipment estimated to require half as many hours per piece of equipment.

Refinery projects will differ in complexity and scope. Even if all refiners desired to complete their project by the same date, their projects would inevitably begin over a range of months. Thus, two projects scheduled to start up at exactly the same time are not likely to proceed through each step of the design and construction process at the same time. Second, the design and construction industries will likely provide refiners with economic incentives to avoid temporary peaks in the demand for personnel.

Applying the above factors, we projected the maximum number of personnel needed in any given month

[346] Moncrief, Philip & Ragsdale, Ralph. (2000). *Can the U.S. E&C Industry Meet the EPA's Low Sulfur Timetable?* Paper presented at NPRA Annual Meeting, March 26–28, 2000. Paper No. AM–00–57.

for each type of job. The results are shown in Table V–5. In addition to total personnel required, the percentage of the U.S. workforce in these areas is also shown, assuming that half of all projects occur in the Gulf Coast

TABLE V–5—MAXIMUM MONTHLY DEMAND FOR PERSONNEL

	Front-end design	Detailed engineering	Construction
Tier 3 Gasoline Sulfur Program:			
Number of Workers	202	809	6,012
Percentage of Current Workforce [a]	11%	9%	4%

[a] Based on current employment in the U.S. Gulf Coast assuming half of all projects occur in the Gulf Coast.

To meet the proposed Tier 3 sulfur standards, refiners are expected to invest $2.2 billion between 2014 and 2019 and utilize approximately 1,000 front-end design and engineering jobs and 6,000 construction jobs. The number of estimated jobs required is small relative to overall number available in the U.S. job market. As such, we believe that three years, plus the additional flexibilities provided, is adequate lead time for refineries to obtain necessary permits, secure E&C resources, install new desulfurization equipment, and make all necessary retrofits to meet the proposed sulfur standards. For an in depth assessment of stationary source implications, refer to Section V.B. For more on our E&C assessment, refer to Section 4.5 of the draft RIA.

3. Per-Gallon Sulfur Caps

In much of Europe and Japan, the gasoline sulfur level is capped at 10 ppm. We, however, are not considering a 10-ppm cap for the U.S. The U.S. gasoline distribution system poses contamination challenges that make it difficult to set and enforce such a tight downstream per-gallon sulfur standard. In Europe, Japan, and California, finished petroleum products are generally shipped short distances directly from the refinery to the terminal with limited susceptibility to contamination. The U.S. has the longest and most complex gasoline distribution system in the world, making it harder to control sulfur contamination than in other countries. Petroleum products are shipped long distances through multi-product pipelines. Further, gasoline goes through the same pipelines and terminals back-to-back with jet fuel (containing up to 3,000 ppm sulfur). Products are often in the custody of a number of separate companies before reaching the terminal. This system is very effective at delivering petroleum products to the bulk of the country, but pipeline transport inevitably introduces the potential for sulfur contamination of the gasoline being shipped through pipelines. Additionally, gasoline additives needed to provide critical fuel performance characteristics (e.g., corrosion control, demulsifiers) also contain varying levels of sulfur which contribute to the overall sulfur content of gasoline. Therefore, we are proposing a 10-ppm refinery average sulfur standard (discussed in Section V.A.2) with higher per gallon caps at both the refinery gate and at all points downstream, which is similar to what currently exists under the Tier 2 program. We believe this is the most prudent approach for lowering in-use sulfur while maintaining flexibility considering cost and other factors. These per-gallon caps are important in the context of an average sulfur standard to provide an upper limit on the sulfur concentration that vehicles must be designed to tolerate. Since there are many opportunities for sulfur to be introduced into gasoline downstream of the refinery, these caps also limit downstream sulfur contamination and enable the enforcement of the gasoline sulfur standard in-use.

We are proposing two options for the per-gallon sulfur caps. Under the first option, we are proposing to maintain both the current 80-ppm refinery gate sulfur cap and 95-ppm downstream sulfur cap.[347] Because this represents no change from current requirements, we believe there would be no additional costs to refiners and downstream parties associated with satisfying these caps on gasoline sulfur content beyond those that were already incurred under the Tier 2 program. Compliance for downstream parties could be even easier given that the average refinery gate level would be lower. However, the high level of the caps means that vehicles still have to be designed to operate on high sulfur fuel, and there will be less attention paid to limiting contamination downstream of the refinery gate.

Under the second approach, we are proposing that the refinery gate cap would be reduced to 50 ppm and the downstream cap would be reduced to 65 ppm, in other words, a 30-ppm reduction in the caps to go along with a 20-ppm drop in the average standard. We are proposing that the 50-ppm refinery gate cap would take effect on January 1, 2020 when the small refiner, small volume refinery, and early credit use provisions would expire. The reason for the delay in the more stringent cap until 2020 is to avoid forcing additional refinery investments during the early credit usage period. A more stringent per-gallon cap would also be very difficult to enforce prior to the small refiner and small volume refinery provisions taking effect. Until that time, the current 80-ppm refinery gate sulfur cap would apply. Additional time beyond when the 50-ppm refinery gate sulfur cap is implemented would be allowed for gasoline produced to an 80-ppm sulfur cap to clear the distribution system before the 65-ppm downstream sulfur cap would replace the current 95-ppm downstream sulfur cap. Beginning February 1, 2020, a 65-ppm downstream sulfur cap would apply at all locations downstream of the refinery and importer gate with the exception of retail and wholesale-purchaser-consumer facilities. Beginning March 1, 2020, a 65-ppm downstream sulfur cap would apply at all locations in the gasoline distribution system downstream of the refinery and importer gate. We note that the additional time for parties to comply with a more stringent downstream sulfur cap mirrors the schedule for compliance under the Tier 2 program.

As discussed previously in Sections III and IV of today's preamble, the vehicle emissions benefits associated with today's proposal are driven by the proposed reduction in the average sulfur content of gasoline from 30 to 10 ppm. However, vehicle manufacturers have expressed concerns about the potential impacts on emissions performance if individual vehicles are exposed to gasoline above the proposed 10-ppm

[347] This approach is reflected in the draft regulatory text.

refinery average.[348] As discussed in Section V.A.2.b, our analysis of the potential response to the proposed ABT provisions assessed three options for refineries: remaining at their current sulfur levels and using credits, reducing sulfur levels to 10 ppm and neither generating or using credits, or reducing sulfur levels to 5 ppm and generating credits. We did not have available information that would enable us to assess refineries that might stay above 10 ppm and reduce their sulfur levels part way (e.g., reduce sulfur from 50 ppm today to 20 ppm under Tier 3). Nevertheless, we anticipate that in most cases refineries would respond by making operational changes and/or minor investments in order to reduce their credit burden and reduce their compliance costs. This anticipation, along with the fact that a 10-ppm average standard by definition limits the amount of gasoline that can remain at higher sulfur levels, means that we anticipate most credit-using refineries would still average less than 20 ppm in their physical gasoline production, and either all or virtually all gasoline would be expected to average at or below 30 ppm. Therefore, we believe that a 50-ppm per-gallon cap at the refinery gate would not impose any additional cost or burden beyond the current 80-ppm per-gallon cap. Our discussions with refiners indicate that a 50-ppm sulfur cap would provide refiners with sufficient flexibility to produce gasoline during temporary upsets and turnarounds through the use of credits without necessitating the installation of additional desulfurization equipment.[349] However, it would provide some additional assurance of in-use gasoline quality and help to address vehicle manufacturer concerns.

We also believe that implementing a 65-ppm downstream sulfur cap would provide essentially the same flexibilities to downstream parties as the existing sulfur caps. We believe that maintaining a 15-ppm differential between the proposed refinery gate sulfur cap of 50 ppm and the proposed 65-ppm downstream sulfur cap would provide pipeline operators, transmix processors, and gasoline additive users the same flexibility as provided under the current 80/95 ppm sulfur caps.

Pipeline operators are currently allowed to blend limited volumes of transmix into gasoline in their systems provided that the resulting gasoline meets all fuel quality specifications and the endpoint of the blended gasoline does not exceed 437 °F.[350] This enables pipeline operators to avoid the installation of additional transmix storage and loading equipment at a number of remote locations to facilitate shipping small volumes of transmix to processing facilities by truck. We believe that a 65-ppm sulfur cap would provide sufficient flexibility to allow pipeline operators to continue this practice.

Currently transmix processors must produce gasoline sufficiently below the 95-ppm downstream sulfur cap to accommodate any downstream sulfur increases from the use of gasoline additives and contamination from further distribution. The sulfur content of the gasoline produced by transmix processors is determined by the sulfur content of the transmix they receive, which in turn is primarily a function of the sulfur content of gasoline and jet fuel components in the transmix.[351] Transmix processors do not handle sufficient volumes to support the installation of currently available desulfurization units.[352] Data provided by the largest operator of transmix processing facilities indicates that relatively few batches of the gasoline they currently produce approach 80 ppm sulfur. Most batches are approximately 10 ppm above the current 30-ppm refinery sulfur average. Therefore, we believe that under a 10-ppm refinery average standard and 50-ppm refinery sulfur cap, transmix processors would be able to produce gasoline sufficiently under the proposed 65-ppm downstream sulfur cap to accommodate the additional sulfur contribution from the use of additives and contamination during further distribution. Since the 65-ppm downstream cap would not take effect until 2020, while the 10-ppm average standard would take effect in 2017, we would have three years of experience with which to verify this and take corrective action if necessary.

In addition to proposing refinery gate and downstream per gallon sulfur caps of either 80 ppm and 95 ppm or 50 ppm and 65 ppm, we are also requesting comment on the potential implementation of a refinery gate sulfur cap as low as 20 ppm and a downstream sulfur cap as low as 25 ppm. This would further constrain downstream contamination and limit the temporary exposure of vehicles in-use to sulfur levels that would significantly degrade their emission performance. This would serve to provide added assurance that all parts of the country would receive the full emission benefits of gasoline sulfur control. However, we are only seeking comment on it and not proposing it due to the potential cost increases resulting from further constraints on refinery and distribution system operations. While a 50-ppm refinery gate cap may not impact refinery costs, in order to meet a 20-ppm refinery gate cap and downstream standard of 25 ppm we expect that essentially all refineries would need to invest to meet the 10-ppm annual average standard. Our modeling of a non-ABT scenario, discussed in Section VII.B, shows that the sulfur control costs would increase by almost 10 percent, with no net change in average in-use sulfur levels. Similarly, while a 65-ppm downstream cap may have little or no impact on downstream operations, a 25-ppm downstream sulfur cap would likely require changes in pipeline operations, treatment of gasoline transmix, and formulation and use of sulfur containing gasoline additives (e.g., corrosion inhibitors, and demulsifiers) that could further increase the costs of the standard. The extent of such impacts and associated costs, however, are difficult to quantify. Consequently we seek comment on the appropriateness, impacts, and costs of lowering the per-gallon caps to 20 ppm at the refinery gate, and 25 ppm downstream.

Further, in order to facilitate the enforcement of the downstream cap and prevent the potential dumping of high sulfur materials into gasoline under the guise of adding gasoline additives, we are proposing additional requirements to clarify the treatment of gasoline additives. Parties that introduce additives to gasoline at over 1.0 volume percent are required to satisfy all of the obligations of a fuel manufacturer including demonstration that the finished blend meets the applicable sulfur specification. A party other than a fuel refiner or importer who adds a quantity of additive(s) amounting to less than 1.0 percent by volume of the

[348] Alliance of Automobile Manufacturers (2011, October 6). Letter to EPA Administrator, Lisa Jackson.

[349] Refer to Section 4.2.4.1 of the draft RIA for a more detailed discussion of the impacts of lowering the refinery gate sulfur cap.

[350] The requirements for transmix blenders are contained in 40 CFR 80.84(d). 437 °F is the maximum endpoint allowed for gasoline in ASTM D4814.

[351] Transmix is a by-product of the multi-product pipeline distribution system. 40 CFR 80.84(a) defines transmix pipeline interface that does not meet the specifications for a fuel that can be used or sold, and that is composed solely of any combination of: previously certified gasoline (including previously certified gasoline blendstocks that become gasoline solely upon the addition of an oxygenate); distillate fuel; or gasoline blendstocks that are suitable for use as a blendstock without further processing.

[352] Transmix processors produce ~0.1 percent of the gasoline consumed in the U.S.

resultant additive(s)/fuel mixture is not considered a fuel manufacturer.[353] Thus, the addition of sulfur to finished gasoline from additives used at less than 1.0 volume percent is simply limited by the current 95-ppm downstream sulfur cap. We are proposing to limit the sulfur contribution from the use of a gasoline additive added downstream of the refinery at less than 1.0 volume percent to 3 ppm when added at the maximum recommended treatment rate. We believe that this limitation would not constrain the use of gasoline additives or result in significant additional costs to gasoline additive manufacturers. This is because information received from additive producers indicates that all current gasoline additives contribute less than 3 ppm to the sulfur content of the finished fuel when used at the maximum recommended treatment rate. The maximum treatment rate is already stated on product transfer document or packaging for the additive. We are proposing a requirement that additive manufacturers maintain records of their additive production quality control activities, which demonstrate that the sulfur content of additive production batches complies with the proposed sulfur requirement, for five years and to make these available to EPA upon request.

B. Refinery Air Permitting Interactions

It is important to the success of the proposed Tier 3 fuel program that refineries are able to obtain air permits, if needed, in time to complete the modifications necessary to comply with the proposed gasoline sulfur program. Accordingly, we have considered the implications of permitting requirements with respect to the implementation of the proposed gasoline sulfur program. This section provides information on this topic. In summary, we believe that only a small percentage of refineries would likely need to make modifications that will trigger a requirement to apply for air permits, and we anticipate that these permit applications would be processed quickly enough that air permitting will not be a significant obstacle to timely compliance with the gasoline sulfur program. In contrast to the Tier 2 program, where EPA expected the need for NAAQS-related New Source Review (NSR) permits might be widespread among refineries, we believe that under the proposed Tier 3 gasoline sulfur standard at most only about 19 refineries would need NSR or Prevention of Significant Deterioration (PSD) permits. This number—which equates to approximately 17 percent of the 111 refineries projected to be affected by the proposed Tier 3 standards—could be even lower if refineries apply emission controls to reduce emissions increases below the significance level or if they ''net out'' of NSR.

If our final assessment of permitting prospects following analysis of comments indicates it would be appropriate, we would form a special team to monitor for permitting delays and assist in resolving associated problems. We also anticipate that other new requirements applicable to refineries that are being proposed for implementation in approximately the same period as the gasoline sulfur program would not interfere with the modifications needed to meet the new sulfur limits and would not create a competition for air permitting agency resources.

We invite public comment on air permitting issues, and on possible actions we might be able to take to help make sure refineries can obtain needed permits expeditiously. As described in further detail in Sections V.B.4 and V.B.6, a number of mechanisms and resources are already available to help mitigate and streamline NSR permitting requirements associated with the proposed Tier 3 fuel program. For example, EPA has issued guidance on Best Available Control Technology (BACT) analysis for GHG emissions, including a white paper that identifies specific technologies available for refinery process units. As explained in greater detail below, we expect that the types of equipment and process technologies that refiners would select to meet the proposed Tier 3 standards would generally be consistent with BACT for GHG emissions in terms of achievable, cost-effective, and energy-efficient design even absent the requirement to obtain a permit, meaning that such a requirement would not necessitate a shift in project design or increase costs.

1. Background on New Source Review Programs

The New Source Review (NSR) program, as it applies to existing major sources of air pollution, requires that a permit be issued before a source begins construction of any project to modify the source that would result in a significant emissions increase and a significant net emissions increase of a pollutant regulated under this program.[354] The physical modifications and operational changes that we expect refineries would make to comply with the proposed gasoline sulfur standards (described in Section V.A.1.d) could result in emissions increases in one or more pollutants that may trigger NSR requirements for preconstruction air permits. NSR permits specify what emission limits must be met by the new and modified equipment that is part of the proposed project. They may contain conditions to make sure that the modifications being made match parameters in the application that the permit-issuing agency relied on in its analysis. Permits contain emission limitations for new and modified units and also typically specify some aspects of how, consistent with the permit application, the project elements must be constructed and operated. For example, the permit may identify important design and operational parameters that are consistent with the established control technology determination(s) and help assure compliance with associated emission limitations. To assure that sources follow the permit requirements, permits also contain monitoring, recordkeeping, and reporting requirements. NSR permits are issued by a state or local air pollution control agency if it has its own permit program that has been approved by EPA in the State Implementation Plan (SIP) or if it has been delegated the authority to issue federal Prevention of Significant Deterioration (PSD) permits on behalf of EPA. An EPA Regional Office issues the permit in other cases.

There are two separate sets of major source permit requirements that may apply to modifications at a refinery depending on the attainment status of the area in which a refinery is located. Each set of requirements is applied on a pollutant-specific basis, so that in some cases both permit programs may

[353] 40 CFR 79.2(d)(1).

[354] Generally, a source is a major source if its ''potential to emit'' a regulated NSR pollutant is greater than either 100 or 250 tons/year depending on the industrial type of the source and whether the area is designated nonattainment for the particular pollutant. All refineries in the U.S. are major sources for purposes of NSR. A major modification is a physical change or a change in the method of operation that causes a significant emissions increase and a significant net emissions increase of any pollutant regulated under the NSR program. (A net emissions increase differs from an emissions increase in that a net increase takes into account contemporaneous emissions changes from other projects at the source.) Significant emission rates vary depending on the pollutant and range from 0.6 to 100 tons/year for criteria (NAAQS) pollutants and their precursors. See 40 CFR 52.21(b)(23). For GHGs, modifications of existing sources trigger NSR permitting requirements when there is an increase of GHG emissions of at least 75,000 tons/year of CO_2 equivalent, as well as any increase of GHG emissions on a mass basis. At the time refineries are required to comply with the proposed fuel sulfur program, the GHG threshold may be different, but will not be lower than 50,000 tons/year.

apply to the same modification project. The PSD permit program applies to any major modification at a source located in a designated attainment or unclassifiable area for any NAAQS pollutant.[355] PSD requires compliance with emission limitations achievable through installation of BACT, an air quality analysis to show that the modification will not cause or contribute to a violation of any NAAQS or applicable PSD increment,[356] an assessment of impact on visibility and other conditions in national parks and similar federal lands, an additional impacts analysis, and an opportunity for public involvement. The second set of requirements is known as the Nonattainment NSR program because it applies to major modifications at sources located in areas designated as nonattainment for a specific NAAQS pollutant.[357] The Nonattainment NSR requirements include, among other things, that a proposed major modification meet the lowest achievable emission rate (LAER) for each triggering nonattainment pollutant for which the source is major and for which there will be a significant emissions increase, obtain emission offsets for those nonattainment pollutants, and provide an opportunity for public involvement. LAER is generally a more stringent emission limitation than BACT. LAER is derived from either the most stringent emission limitation contained in the implementation plan of any state for the same type of source or the most stringent emission limitation achieved in practice. Emission offsets are emissions reductions, generally obtained from other existing stationary sources located in the vicinity of a proposed source. Such offsets must be equal to or larger than the emissions increase resulting from the modification to ensure that the growth being allowed to occur does not interfere with the ability of an area to continue making reasonable further progress towards attainment of the NAAQS.

As described previously in Section V.A.1.d, there are several types of process changes refineries could make to meet the proposed gasoline sulfur levels. To different degrees, all these technologies involve process heat from fuel combustion and, thus, have the potential to increase emissions of pollutants associated with combustion that are regulated under NSR,[358] such as NO_X, VOCs, $PM_{2.5}$, PM_{10}, CO, SO_2, and GHGs. The addition of certain technologies could also result in equipment leaks of petroleum compounds, which could increase emissions of VOCs and other pollutants. It is also possible that the removal of more sulfur from the gasoline stream could require increased capacity or increased utilization of other refinery processes, such as hydrogen plants and sulfur recovery units (SRUs), which are sources of air emissions. The emissions increases associated with a desulfurization project would vary from refinery to refinery, depending on a number of refinery-specific factors, such as the refinery output volume, refinery configuration, feedstocks, choice of desulfurization technology, and type of fuel used to operate affected process heaters.

As described in more detail in Section V.B.4, we anticipate that the types of changes that would occur at most refineries would not result in sufficient emissions increases to require major NSR permits as a prerequisite for completing the needed changes. The major NSR permitting requirements would not be triggered for several reasons: because the emissions increase or the net emissions increase is naturally less than the significant level, because the refinery installs control technologies on project-affected units to further limit the emissions increase, and/or because the refinery ''nets out'' all or part of the emissions increase.

However, we anticipate that some refineries have the potential to experience significant emissions increases and significant net emissions increases as a result of process changes necessary to meet the proposed gasoline sulfur standard and, therefore, may trigger major NSR (Nonattainment NSR and/or PSD). These facilities would have to obtain a major NSR preconstruction permit prior to making these necessary process changes. For any required major NSR permits, the associated control technology requirements (BACT and/or LAER) would apply only to new or modified units associated with the project and not to units at the refinery that are not affected by the project. We do not anticipate that the time frames required for the small number of affected refineries to obtain any needed NSR and/or PSD permits will present an obstacle to timely compliance with the proposed Tier 3 gasoline sulfur requirements. We are proposing approximately 3 years of lead time. However, as discussed in section V.E., this is extended to up to 6 years of lead time for all small refineries, as well as for all other refineries if they take advantage of the flexibility of the early credit provisions. In comparison, as discussed in section V.A.2.c, 95 of the 111 refineries are anticipated to be able to comply within 2 years, and the remaining 16 within 3 years. For the 16 that may require up to 3 years to comply due to the construction of grassroots hydrotreaters, only 2 of these are projected to potentially trigger the need for new permits, and even then only for PSD for greenhouse gases, and only if they choose to produce their own hydrogen. As a result, only two refineries may actually require the full 3 years to comply.

For facilities subject to major NSR, the timing of permit issuance could vary depending on a number of factors, including the clarity and completeness of the application, the complexity of process changes, the type of permit required, air quality impact, control technology reviews, and the permitting agency's overall permit workload. The time spent preparing a permit application is under the control of the applicant. Once a permit application is complete, permitting authorities operating under approved SIPs should be able to issue a permit within 9 to 12 months if the permit applies to NAAQS pollutants. Because EPA-issued permits and permits issued by states operating under a delegation from EPA are subject to additional analysis and interagency consultation steps specified in federal law, it can take a few more months if, for example, there are endangered species or historical preservation issues.[359] For permits that apply only to GHGs, we anticipate that less time will be necessary both to prepare the

[355] The PSD program stems from part C of Title I of the Clean Air Act. The implementing regulations are contained in 40 CFR 51.166 and 52.21.

[356] A system of ''increments'' is the mechanism used in the PSD program to define significant deterioration of ambient air quality for a pollutant. An increment is the maximum allowable increase in ambient concentrations of a pollutant in an area relative to a specified baseline. Increases above that level are considered to significantly deteriorate air quality and cannot be allowed.

[357] The Nonattainment NSR program stems from part D of Title I of the Clean Air Act. The implementing regulations are contained in 40 CFR 51.165 and 50 CFR part 51 appendix S. Under Nonattainment NSR, a major source is generally any source with a potential to emit of 100 tons/year or more of the nonattainment pollutant, regardless of industrial type (lower thresholds apply for some pollutants/classifications). The thresholds for a significant emissions increase under Nonattainment NSR are generally the same as under PSD but lower for certain pollutants/classifications.

[358] Toxic air pollutants are excluded from the PSD program. 42 U.S.C. 7412(b)(6); 40 CFR 52.21(b)(50)(v).

[359] These processing time periods assume that the refinery can successfully show that the emission increases associated with the modifications will not cause or contribute to a violation of any NAAQS or increment (under PSD) or can obtain needed emissions offsets for the emission increases (under Nonattainment NSR).

application and for the permitting authority to approve the permit. The CAA requires that EPA take final action on a PSD permit within one year of the filing with the agency of a complete application. 42 U.S.C. 7475(c). Refineries that are able to avoid major NSR may be required to obtain a state-issued minor NSR permit. Generally, minor NSR permits involve less extensive and/or stringent requirements and have shorter processing times than major NSR permits.

2. Background on NSR Experience Under the Tier 2 Fuel Program

Many of the modifications that refineries are projected to make in order to comply with the proposed Tier 3 fuel program are similar in type, although not necessarily in number or magnitude, to the changes that were needed to comply with the Tier 2 fuel program finalized in 2000. Therefore, information on the Tier 2 experience may assist the public in understanding the permitting issues for the Tier 3 fuel program and in providing comment on possible actions we might undertake to help refineries expeditiously obtain needed permits.

The Tier 2 program was designed to reduce the average sulfur content of gasoline from about 300 ppm to 30 ppm, a reduction of about 90 percent. Anticipating that many refineries would have to make modifications that might trigger the need for NSR permits, we addressed the permitting issue in the proposal for the Tier 2 program, in the final rule, and during implementation. At proposal, we provided background information on the NSR program and its relationship to the types of changes likely to be required at refineries. We had not estimated the number of refineries that might trigger NSR, but we stated that the number could be substantial. We invited comment on a number of actions that EPA, states, and/or refineries could pursue in order to help refineries avoid the need for NSR permits or to obtain permits more expeditiously than might otherwise be the case. These actions included the following:

- Use of plantwide applicability limits, possibly facilitated by new EPA guidance or rules addressing issues specific to refineries.
- Issuance of new federal guidance on streamlining certain major NSR permitting requirements such as control technology and compliance parameters.
- Use of emissions reductions resulting from vehicles operating on lower sulfur gasoline as offsets for refineries seeking Nonattainment NSR permits.
- Use of model permits and permit applications.
- EPA refinery permitting teams.

The Tier 2 proposal also addressed issues related to the Title V permitting program,[360] and requested comments on possible approaches by which refineries might satisfy some NSR and Title V requirements at the same time.

We received comments on refinery permitting issues from the refining industry, the automobile manufacturing industry, state and local agencies that administer air permitting programs, and environmental and community groups. Based on these comments and statutory constraints, we decided that it was not necessary or appropriate to exempt Tier 2 projects from the normally applicable preconstruction review process. We also decided not to pursue the development of guidance on plantwide applicability limits for refineries based on comments suggesting this would be an unproductive effort because of the complexity of refineries. Nonetheless, we concluded that it was useful to add certainty to the anticipated permitting actions and schedules, and to minimize the possibility of delay. Accordingly, EPA took two types of actions to promote these objectives. First, as we are now proposing for Tier 3 (see proposed program flexibilities discussion in V.E.1.-3.), we structured the Tier 2 gasoline sulfur program to allow additional lead time for many refineries (i.e., certain refineries would be able to make desulfurization changes later than the otherwise applicable compliance date to meet Tier 2 requirements). This approach was expected to help address the concerns over the availability of necessary new equipment and permitting backlogs caused by many refineries acting to obtain permits and order equipment within the same time period.Second, we stated our intention to take several actions during implementation of the Tier 2 rule to expedite and impart greater certainty in obtaining necessary major NSR permits (described in more detail below). We also stated our intention to assist states and refiners on a case-by-case basis in their efforts to address any unique permitting problems that might arise and, thus, remedy potential problems that could cause unanticipated delays. We committed to work with refiners and the state/local permitting agencies on a case-by-case basis, where a refinery had unique circumstances that necessitated unique treatment. We clarified that, in our efforts to provide greater certainty and to facilitate more expeditious permitting, we were in no way shortcutting existing opportunities for public participation in making permitting decisions. We encouraged refineries to begin discussions with permitting authorities and to submit permit applications as early as possible.

The final Tier 2 rule identified three key actions that we intended to take (and subsequently took) to provide assistance that would be useful toward helping states issue timely permits to refineries. The first such action was to organize a special EPA team, comprised of Headquarters and Regional Office experts, to track the overall progress in permit issuance and to be available to assist state and local permitting authorities, refineries, and the public upon request to resolve site-specific permitting issues. The team made special efforts to be aware of state and local permitting actions that were underway during the time between the finalization of the Tier 2 program and the compliance time frame. Experience during this period suggested that state and local permitting agencies, as predicted in their comments on the proposed Tier 2 program, were able to process permit applications in a timely manner, without much need for special troubleshooting help from the EPA team. In many cases, the modifications to allow compliance with Tier 2 requirements were subject to only minor NSR permitting requirements rather than major NSR, or those modifications were rolled into another permitting action that was needed for other modifications or expansions due to other technical or market developments. We believe it is reasonable to expect that similar outcomes (refineries not needing major NSR permits) would result in connection with air permitting for the modifications refineries would need to make under the proposed Tier 3 gasoline sulfur program.

The second action we took was to develop new guidance on emission control technology requirements to meet BACT and LAER. We issued this guidance in 2001. It addressed the levels of control that could be reasonably

[360] Title V of the 1990 CAA Amendments requires all major sources and some minor sources of air pollution to obtain an operating permit. A Title V permit contains all air pollution requirements that apply to the source, including emissions limits and monitoring, record keeping, and reporting requirements. It also requires that the source report its compliance status to the permitting authority annually. All existing refineries potentially affected by the proposed Tier 3 fuel standards have Title V permits and, because Title V permits by themselves generally do not establish new applicable requirements, the only implication of the proposed Tier 3 fuel standards would be the ''roll-in'' of any new NSR permit requirements into existing refinery Title V permits. Permitting agencies have efficient processes to accomplish this that do not delay construction of proposed projects.

anticipated to represent BACT or LAER under the major NSR requirements. Our general experience following the release of this BACT/LAER guidance was that it did not play a substantial role in the permitting of refinery projects for Tier 2. That is, due to their own expertise and the need to consider refinery-specific factors, state and local permitting authorities generally did not find it necessary to rely on our guidance in their own permitting processes for refineries making changes to meet the Tier 2 requirements. In addition, many of the refinery projects were able to avoid major NSR, so BACT and LAER were not requirements that had to be met. Again, we believe it is reasonable to expect that similar outcomes (refineries not needing major NSR permits) would result in connection with air permitting for the modifications refineries would need to make to meet the proposed gasoline sulfur standard.

The third action we took was a fast-track effort to develop new guidance on the use of emissions reductions resulting from vehicles operating on lower sulfur gasoline as emission offsets for refineries seeking Nonattainment NSR permits. We invited comment on a draft version of this guidance five months after the final Tier 2 rule. The draft guidance discussed in depth how the use of such offsets could be made consistent with seven criteria given in the CAA for such offsets. We received many comments from state and local air agencies and community groups opposing the proposed offset guidance on legal, fairness, and environmental justice grounds. One refiner recommended that EPA set aside a portion of the Tier 2 reductions in each state as offsets, rather than leaving this decision to each state. We did not finalize the draft guidance, and no state further pursued a system under which vehicle emissions reductions were made available to refineries as offsets for Nonattainment NSR permits.

3. Changes in the NSR Permitting Program Since Tier 2 Final Rule

The Tier 2 fuel program was promulgated in early 2000, and most refiners were required to comply with those requirements by 2006. During and since that period, there have been a number of changes to the major NSR programs. These changes are summarized here to facilitate public comment as to how these changes may affect whether refinery modifications undertaken as a result of the proposed Tier 3 fuel program would trigger NSR and/or the requirements that refiners and permitting authorities would have to meet.

In 2002, we issued a final rule known as the NSR Reform Rule.[361] This rule revised the EPA-administered NSR programs and changed the minimum approvals required for SIP-approved NSR programs for NSR applicability. Some of the provisions of the 2002 final rule have been vacated by the Court, subsequently amended by EPA, or are currently under reconsideration. Two key components of the NSR Reform Rule that remain in place are a new applicability test for projects involving existing emissions units (the ''actual-to-projected-actual'' applicability test) and provisions that allow for the establishment of plantwide applicability limits (PALs). The change in the applicability test since the Tier 2 experience means that fewer modifications may be found to have emissions increases that are above the significant emission levels, in which case fewer major NSR permits may need to be issued. The PAL provisions offer a voluntary alternative for determining major NSR applicability that can provide sources with significant flexibility to manage facility-wide air emissions without triggering major NSR permitting. Refineries that have established PALs or will establish one or more PALs prior to or as part of permitting associated with the Tier 3 fuel program will be far less likely to trigger major NSR permitting requirements.

We have also taken a series of actions that have had the effect of making emissions of GHGs a factor in determining whether a PSD permit is required for a refinery modification. Under the applicable PSD provisions in the CAA, GHGs became regulated under the PSD program on January 2, 2011 after EPA adopted tailpipe emissions standards for these pollutants under Title II of the CAA. Because the incorporation of GHGs into the PSD program had the potential to significantly expand the number of sources required to obtain PSD permits, EPA adopted the 2010 Tailoring Rule to phase in the PSD permitting requirements according to a series of steps based on different GHG emission thresholds.[362] At this time the Tailoring Rule requires that any modification at an existing refinery that increases GHG emissions by 75,000 tons per year or more of CO_2 equivalent and also produces any mass increase in GHG emissions would trigger the need for a PSD permit that addresses GHG emissions.[363] Because there are no NAAQS for GHGs and, therefore no nonattainment areas, only PSD could potentially apply to a refinery modification with respect to increases in GHG emissions. The analysis (described in Section V.B.4) indicates that only a small number of large refineries would be affected. For the sources that would need a PSD permit for GHGs, the main substantive requirement for obtaining the permit is to apply BACT for GHG emissions from the new or modified unit(s) because an air quality analysis is not required.

Another development since 2000 has been the establishment of several new and revised NAAQS and the designation of nonattainment areas under some of these NAAQS. At the time of the final Tier 2 rule, the NAAQS of most relevance to Nonattainment NSR permitting for refineries were the 1-hour ozone NAAQS, the PM_{10} NAAQS, and the SO_2 NAAQS, because these NAAQS accounted for the vast majority of the existing nonattainment areas. The designation of new nonattainment areas under the 1997 NAAQS for 8-hour ozone became effective in 2004. Designations under the 1997 NAAQS for $PM_{2.5}$ became effective in 2005. In 2008, we again revised the ozone NAAQS and designations under that standard became effective in July 2012.[364] In 2006, we revised the 24-hour $PM_{2.5}$ NAAQS and in 2009 (2011 for a few areas) we designated areas under the 2006 $PM_{2.5}$ standard.[365] In December 2012 we revised the primary annual $PM_{2.5}$ NAAQS and designations associated with that revised standard are expected to become effective in 2015.[366] One effect of this evolution of the NAAQS and associated attainment status for areas is that it has become more common over time for sources to be located in ozone or $PM_{2.5}$ nonattainment areas and thus subject to Nonattainment NSR rather than to PSD for their VOC, NO_X, and $PM_{2.5}$ emissions increases. However, over the same time period, some areas currently designated as nonattainment for ozone and/or $PM_{2.5}$ are expected to be redesignated to attainment. Therefore, we do not expect a dramatic shift on a national basis in one direction or the other.

In 2008, we issued a final rule specifying in detail how NSR applies to $PM_{2.5}$.[367] In addition, in 2010 we

[361] 67 FR 80186 (December 31, 2002).

[362] 75 FR 31514 (June 3, 2010).

[363] 77 FR 41051 (July 12, 2012).

[364] 77 FR 30088 (May 21, 2012).

[365] Listings of areas currently designated nonattainment for all the NAAQS are available at *http://www.epa.gov/oar/oaqps/greenbk/index.html*.

[366] 78 FR 3086 (January 15, 2013).

[367] 73 FR 28321 (May 18, 2008). On January 4, 2013, the U.S. Court of Appeals for the District of Columbia, in *Natural Resources Defense Council* v.

supplemented this rule with additional provisions for the PSD program specifically.[368] The latest rule, among other things, established $PM_{2.5}$ increments, and as of October 20, 2011, sources that trigger PSD for $PM_{2.5}$ are required to show compliance with the applicable increment, in addition to showing that they do not cause or contribute to a violation of any of the $PM_{2.5}$ NAAQS.

In 2010, EPA finalized new NAAQS for 1-hour NO_2 and 1-hour SO_2.[369] EPA has completed the initial round of mandatory designations for the 1-hour NO_2 NAAQS and all areas have been designated unclassifiable/attainment.[370] The first round of designations for the 1-hour SO_2 NAAQS will be made in June 2013, thus we do expect there to be nonattainment areas for the 1-hour SO_2 NAAQS by the time that refineries might need to seek NSR permits to make the required facility modifications for the Tier 3 program. However, we expect that no refinery would have increases in SO_2 emissions that are large enough to trigger major NSR, so any change in attainment status for the SO_2 NAAQS should have no effect on permitting issues.

In areas designated attainment or unclassifiable for the 1-hour NO_2 or 1-hour SO_2 NAAQS, the air quality impacts assessment required to obtain a PSD permit can present new challenges for permit applicants. This is because demonstrating that a modification will not cause or contribute to a violation of these 1-hour standards may require more refined and data-intensive air quality modeling approaches than has previously been required to make this demonstration with respect to the pre-existing NAAQS for NO_2 and SO_2. To assist permit applicants in performing the required analysis of 1-hour NO_2 and SO_2 air quality impacts, we have issued several guidance memos that describe available alternative approaches and flexibilities.[371] In addition, EPA provides technical assistance with modeling issues upon request.

4. Assessment of Tier 3 Refinery Changes and Permitting Implications

EPA has performed a refinery-by-refinery assessment of the physical and operational changes that are likely to be needed to allow each active refinery in the U.S. to produce gasoline that complies with the proposed Tier 3 fuel specifications. We have also assessed the likely effects of those changes on refinery emissions. This assessment is described in more detail in Section 5.4 of the draft RIA. Using this assessment, we were able to gain a reasonable understanding of the potential scope of NSR permitting requirements refiners might face under the proposed Tier 3 program. In general, our assessment indicates that only a small number of refineries will likely need to make modifications of a type and size that would trigger the need for a PSD or Nonattainment NSR permit. The assessment and this conclusion take into account the changes in the NSR program and its context since 2000 described in Section V.B.3. A technical memorandum describing in detail our analysis and results is in the public docket for this proposal.[372]

In our analysis, we started with the estimates we have made regarding the physical and operational changes that would be required at each refinery (described in Section 5.4 of the draft RIA). The modifications at a given refinery could include revamps to existing FCC pre- or post-treatment unit(s) or the installation of a new grassroots post-treatment unit for sulfur reduction. Based on the projected refinery-specific changes, we estimated the increased demand for energy (i.e., fuel to generate process heat, steam and electricity), hydrogen, and sulfur recovery associated with meeting the proposed Tier 3 standards. We selected representative industry emission factors for NAAQS pollutants, their precursors, and GHGs for each emitting process and combined them with estimates of incremental activity to estimate the emissions changes at each equipment unit (or group of similar units) at each refinery.

To determine upper and lower bounds for emissions increases resulting from changes necessary to meet the proposed Tier 3 gasoline sulfur specification, we evaluated two scenarios, a no ABT scenario (assuming no trading of sulfur credits) and the primary ABT scenario described in Section 5.4 of the draft RIA. We did not have sufficient detailed information to predict which refineries would find it most profitable to generate additional electrical power, hydrogen and high octane blendstocks internally on site rather than purchasing these inputs from external suppliers. If a refinery generates these additional inputs internally on site, the additional emissions would count towards the significant emissions rates and could affect the need for a major NSR permit. To account for these variables, we evaluated a high and a low case for each identified scenario. Under the high case, we assumed 100 percent internal generation of the additional electrical power, hydrogen, and high octane blendstocks and under the low case, 100 percent external generation of the same. We expect refineries to actually be somewhere between these two extreme cases in the future. For the identified scenarios and cases, we compared the emissions increase for each pollutant at each refinery to the significant emissions increase threshold for that pollutant, taking into consideration the current attainment status for each pollutant where the refinery is located. We found that the no ABT scenario, low case had the lowest number of refineries estimated to trigger major NSR and the primary ABT scenario, high case had the highest, although the overall numbers did not vary greatly.

An important aspect of our analysis is that we assumed that refineries would not install new emission controls on affected units for the purpose of staying below the significant emissions increase threshold and thereby not triggering major NSR. In particular, we did not assume that selective catalytic reduction (SCR) to control NO_X emissions would be applied to new or modified fuel combustion units. This is an important assumption that tends to result in overestimates of the number of major NSR permits needed for NAAQS-related pollutants. In reality, applying new emission controls would be an option that refineries may employ to legally avoid major NSR permitting. We also did not assume that refineries would ''net out'' of NSR by taking credit for any emissions reductions occurring within a contemporaneous timeframe, including any new emissions reduction

EPA, No. 08–1250, 2013 WL 45653 (filed July 15, 2008, consolidated with 09–1102, 11–1430), issued a judgment that remanded EPA's 2008 $PM_{2.5}$ NSR rule and ordered the EPA to repromulgate the rule ''pursuant to Subpart 4 consistent with this opinion.'' *Id.* at *8. Subpart 4 of Part D, Title 1 of the CAA establishes additional provisions for particulate matter nonattainment areas. EPA is evaluating the impact of the court decision on the provisions of the 2008 rule.

[368] 75 FR 64864 (October 20, 2010). On January 22, 2013, the U.S. Court of Appeals for the District of Columbia, in *Sierra Club* v. *EPA,* No. 10–1413 (filed Dec. 17. 2010), issued a judgment that vacated and remanded the provisions at 40 CFR 51.166(k)(2) and 52.21(k)(2) (concerning implementation of the $PM_{2.5}$ SILs) and vacated the provisions at 40 CFR 51.166(i)(5)(i)(c) and 52.21(i)(5)(i)(c) (adding the $PM_{2.5}$ SMC) that were promulgated as part of the rule.

[369] 75 FR 6474 (February 9, 2010) and 75 FR 35520 (June 22, 2010).

[370] 77 FR 9532 (February 17, 2012).

[371] These memos are available at *http://www.epa.gov/ttn/scram/guidance_clarificationmemos.htm, http://www.epa.gov/region07/air/nsr/nsrmemos/appwso2.pdf,* and *http://www.epa.gov/nsr/documents/20100629no2guidance.pdf.*

[372] Keller, P. (February 2013). New Source Review Permitting Impact Analysis for Proposed Tier 3 Gasoline Program. Memorandum to the docket.

projects initiated specifically for the purpose of ''netting out.'' This analysis resulted in a prediction of whether a PSD and/or a Nonattainment NSR permit would be needed for each refinery and the pollutants that would have to be addressed in those permits, under each of the two scenarios. Only the results for the primary ABT scenario, high case are presented here. The results for the no ABT scenario, which are not greatly different, are described in the previously referenced technical memo found in the docket for this rulemaking.

We found that under the primary ABT scenario, high case, 19 refineries appeared likely to have significant emissions increases for one or more pollutants and thus would trigger major NSR.[373] This equates to approximately 17 percent of the 111 refineries projected to be affected by the proposed Tier 3 standards. Of these 19 refineries, we predicted that 13 refineries would need permits for NAAQS-related pollutants and their precursors (PSD and/or Nonattainment NSR) and for GHGs (results for GHG are discussed below). Thus, compared to the Tier 2 program where EPA expected the need for NAAQS-related NSR permits might be widespread among refineries, we believe that under the proposed Tier 3 program only about 13 refineries would need major NSR air permits to address NAAQS pollutants. This number could be lower if those refineries apply pollution controls, such as SCR for NO_X, to sufficiently reduce the emissions increases to levels that are below the applicable pollutant significance level, or if the refineries can achieve emissions reductions elsewhere at the facility to ''net out'' of major NSR. For refineries that are required to obtain a major NSR permit for NAAQS pollutants, the permitting process is expected to normally take about 9 to 12 months once the permitting authority has received a complete application.

All 13 refineries just described as potentially needing NSR permits for NAAQS pollutants are also projected to need PSD permits for GHGs. In addition to these 13 refineries, we estimated that 6 other refineries may require a PSD permit addressing only GHG emissions from new or modified equipment that is part of the project. For these refineries, BACT must be applied for GHG emissions, which we expect in most cases would mean that new or modified fuel-burning equipment would have to be designed for good energy efficiency. We expect that the types of equipment and process technologies that refiners would modify or add to meet the proposed Tier 3 standards would generally be consistent with BACT for GHG emissions in terms of achievable, cost-effective, and energy-efficient design even absent the requirement to obtain a permit, meaning that such a requirement would not necessitate any shift in project design or increase costs. This expectation is based on the fact that there are strong economic incentives for refiners to design and purchase the most energy-efficient process equipment to minimize the cost of production. For example, most of the new or modified units expected to be involved in refinery projects designed to meet the proposed Tier 3 standards are fuel combustion units (e.g., process heaters). Because fuel cost (direct cost in the case of purchased natural gas and opportunity cost in the case of refinery-generated fuel gas) represents a significant component of total operating cost for such units, refineries will strive to maximize energy efficiency based on available technologies as part of their project design. EPA requests comment on the likelihood that refineries' costs for equipment and process technology for compliance with Tier 3 would include any associated costs of compliance with NSR.

In 2010, EPA issued a white paper on available and emerging technologies for reducing GHGs from the petroleum refining industry.[374] This white paper addresses the types of equipment expected to be involved in projects designed to meet the proposed Tier 3 fuel standards, including process heaters/boilers, hydrogen plants, and sulfur recovery units. The identified GHG control technologies for these types of units predominately involve opportunities for energy efficiency. Consistent with the findings reported in the white paper, our experience to date with GHG permitting at refineries and other similar sources supports the application of energy efficient design and operation of affected units as BACT, and we do not expect that in the time frame associated with Tier 3-related projects, add-on controls would be required.

For EPA-issued permits and permits issued by state or local agencies under delegation, consultation with other federal agencies under the Endangered Species Act and consideration of environmental justice would also be required. Significantly, no air quality modeling of GHGs would be required, and thus there would be no need to obtain extensive input information on meteorology and emissions from other nearby sources. Given these differences, we expect that the timeline for obtaining a permit only for GHG emissions should be shorter by several months than the timeline for a permit that addresses NAAQS pollutants.

We invite public comment on our analysis including ways in which we might improve the assessment between now and the final rule.

5. New Source Performance Standards and National Emission Standards for Hazardous Air Pollutants for Refineries

In addition to the proposed Tier 3 rulemaking, we are also conducting other rulemakings to set new and revised limits for direct emissions from refineries of NAAQS-related pollutants and hazardous air pollutants (HAPs). This section provides summary information on these rulemaking efforts, so that comments on the proposed Tier 3 program can be more fully informed.

We first regulated petroleum refineries in 1974 when the agency issued the New Source Performance Standards (NSPS) to control NAAQS-related air pollutants. The NSPS applies to refinery process units that commenced construction, reconstruction, or modification after June 11, 1973, but before May 14, 2007. On June 24, 2008, we amended the NSPS and issued new standards for most process units constructed, reconstructed, or modified after May 14, 2007 and for flares which commence construction, modification, or reconstruction after June 24, 2008. We were petitioned to reconsider these final rules and on September 12, 2012, EPA finalized amendments and technical corrections to address issues related to flares and process heaters. There are two existing Maximum Achievable Control Technology (MACT) standards to control HAPs that apply specifically to petroleum refineries.[375] These standards are referred to as MACT 1 and 2 and were issued in 1995 and 2002, respectively. EPA is required to perform risk and technology reviews (RTR) to assess residual risk for MACT standards for HAPs within eight years of the

[373] Because state requirements regarding minor NSR permitting vary and we do not expect minor NSR permitting programs to be a significant challenge for refinery modification projects, we did not attempt to estimate how many of the remaining refineries might need to obtain minor NSR permits.

[374] See ''Available and Emerging Technologies for Reducing Greenhouse Gas Emissions from the Petroleum Refining Industry,'' October 2010, available at *http://www.epa.gov/nsr/ghgpermitting.html.*

[375] These are codified in 40 CFR part 63, Subpart CC (National Emission Standards for Hazardous Air Pollutants From Petroleum refineries) and 40 CFR part 63, Subpart UUU (National Emission Standards for Hazardous Air Pollutants for Petroleum Refineries: Catalytic Cracking Units, Catalytic Reforming Units, and Sulfur Recovery Units).

promulgation of the original MACT standards. In addition, EPA is required to perform a technology review of advancement in processes, practices and control requirements every eight years after promulgation of the MACT. EPA is planning to issue a single rulemaking that will address the RTR analyses for both MACT 1 and 2.

Finally, on March 21, 2011 EPA published MACT standards for Industrial, Commercial, and Institutional Boilers and Process Heaters and on January 31, 2013 EPA finalized revisions to those standards based on reconsideration.[376] These standards apply to boilers and process heaters at refineries. Because any changes that are made to meet new requirements of these rulemakings would likely reduce rather than increase refinery emissions, we do not expect these modifications to trigger NSR unless a refinery chooses to increase the capacity of one or more of its units at the same time.[377] This means that we expect the final rules would not themselves increase the major NSR workload for refinery environmental permitting staffs or for permitting agencies in the same period that these organizations need to prepare and process permit applications related to the proposed Tier 3 fuel program. (Minor NSR permitting workload may be affected.)

6. Steps for Streamlining the Permitting Process

As we did for Tier 2, we could organize a Headquarters-Regional response team to monitor and address any delays in permitting by facilitating coordination among organizations where needed to resolve permitting issues. The mission of this team would also include tracking the overall progress in permit issuance and assisting state and local permitting authorities, refineries, and the public upon request to resolve site-specific permitting issues. The team would be comprised of EPA staff knowledgeable about permitting programs and refinery operations, so the team could provide expert assistance and troubleshoot permitting issues in a timely fashion. We invite comment from refineries, permitting authorities, and others regarding the usefulness of such a team.

We will continue to maintain and refine the tools and resources that have proven useful to permit applicants and permitting authorities, such as the RACT/BACT/LAER clearinghouse, the Support Center for Regulatory Atmospheric Modeling, and our web-based resources on GHG permitting. These GHG permitting resources include various materials on the topic of BACT for GHG, including white papers and copies of our comments on recent draft permits proposed by state and local permitting agencies.[378] One of the white papers, described previously in Section V.B.4, addresses petroleum refining, and provides information on control techniques and measures that are available to mitigate GHG emissions in order to assist states and local air pollution control agencies, tribal authorities, and regulated entities in implementing technologies or measures to reduce GHGs under the CAA, particularly in permitting under the PSD program and the assessment of BACT.

We believe the guidance we provided on BACT and LAER for NO_X and VOC shortly after the final Tier 2 rule was not widely utilized by either refineries or permitting authorities. Nevertheless, we invite comment on whether additional guidance on BACT and LAER for these and other NAAQS-related pollutants would be useful to support permitting for Tier 3-related modifications as well as the appropriate scope and substance of such guidance. We anticipate that if we do develop any new BACT/LAER guidance, we would provide an opportunity for public comment on the draft guidance before finalizing it.

For Tier 3-related NSR permit applications submitted to EPA Regional Offices, we will assist members of the local communities in understanding the applications and our proposed permits, in offering comment, and participating in our decisions. We also encourage similar assistance efforts by the state and local permitting authorities, and we invite comment on the specific forms that our and their support should take.

EPA received comments during the Tier 2 rulemaking that vehicle emissions reductions should be allowed to be used as part of ''netting out'' of NSR. This concept is now relevant to GHG emissions, in addition to the NAAQS-related pollutants to which it was relevant at the time of the Tier 2 rulemaking. At that time we responded to the comments by saying that the use of vehicle emissions reductions for netting purposes was not permitted by the NSR regulations, since the creditable emissions reductions used for netting purposes must result from reductions occurring at the modified source. We noted, for example, that the definition of net emissions increase in 40 CFR 52.21(b)(3)(i) includes only increases and decreases occurring ''at the source''. We believe this provision in the NSR rules is well founded in the CAA. Setting aside the issue of whether we have authority to change this provision, the potential consequences of changing it to allow the use of non-source emissions reductions in ''netting out'' of NSR would be far reaching. We are not proposing such a change as part of this rulemaking, and we believe that any proposal for such a change should be based on a much better assessment of its possible implications than can be accomplished as part of this rulemaking. We also note that ''netting out'' of NSR could be a complex and often time-consuming process because all contemporaneous emissions increases and decreases within the refinery must be properly accounted for, so the ability to use vehicle emissions reductions in the netting analysis would not automatically make ''netting out'' a time-saving shortcut around the permitting process that would otherwise apply. Nevertheless, we invite comment regarding how critical such a change may be to successful permitting of the modifications needed to comply with the proposed Tier 3 program, possible legal rationales for such a change, and the possible implications beyond the Tier 3 rule including ways to limit such implications by making the change specific to vehicle emissions reductions that are closely linked to changes in fuel properties that result from the refinery modifications.

Finally, we invite comment on issues related to state and local minor source NSR programs and how they may relate to implementation of the proposed Tier 3 fuel program. EPA rules give states wide latitude in the design and operation of their minor source programs, and we do not routinely require states to report their minor source permitting activity to us. Therefore, focused comments on this issue would be helpful.

C. Standards for Denatured Fuel Ethanol and Other Oxygenates

Current gasoline requirements include the prohibition on blending gasoline with denatured fuel ethanol (DFE) that has sulfur content higher than 30

[376] 76 FR 15451 (March 21, 2011) and 78 FR 7138 (January 31, 2013).

[377] Some approaches for controlling NAAQS-related pollutants do require additional electrical power or otherwise may increase GHG emissions. Conversely, some approaches to increasing energy efficiency (and thereby reducing GHG emissions) can increase emissions of NAAQS-related pollutants if compensating changes are not made in downstream emission control devices, for example increases in NO_X emissions from higher combustion temperatures.

[378] See ''PSD and Title V Permitting Guidance for Greenhouse Gases,'' March 2011 and ''Available and Emerging Technologies for Reducing Greenhouse Gas Emissions from the Petroleum Refining Industry,'' October 2010, both available at *http://www.epa.gov/nsr/ghgpermitting.html.*

ppm.[379] This requirement reflects the current 30-ppm refinery average sulfur requirement. Consistent with this requirement and our proposed introduction of a 10-ppm refinery average sulfur standard, we propose that manufacturers of DFE for use by oxygenate blenders would be required to meet a 10-ppm sulfur cap.

California's requirements for DFE, which became effective in December 2003, are as follows: maximum 10 ppm sulfur, maximum 0.06 volume percent benzene, maximum 0.5 volume percent olefins, and maximum 1.7 volume percent aromatics.[380] Denaturants used to manufacture DFE must also meet maximum benzene, olefins, and aromatics specifications that are based on the anticipated dilution ratio when blended with ethanol.[381] Additionally, in July 2002, the Renewable Fuel Association (RFA) recommended that all ethanol produced for use in the U.S. should be manufactured in accordance with the California specifications primarily because of logistical difficulties in segregating ethanol destined for California from other destinations.[382] RFA recently indicated that all ethanol producers are adhering to this recommendation. Some DFE marketers have also adopted California's DFE requirements as part of their specifications.[383] Consequently, we believe that the implementation of a 10-ppm sulfur cap for DFE would not result in increased burden to ethanol producers. We are proposing it to reduce emissions from motor vehicles, the same reason we are proposing a more stringent sulfur standard for gasoline into which it is blended.

Further, the ASTM International specification for DFE allows only natural gasoline, gasoline blendstocks, and gasoline as denaturants.[384] Similar to the ASTM specifications, we are proposing to require that only natural gasoline, gasoline, and gasoline blendstocks for oxygenate blending (BOB) be used as ethanol denaturants. We believe that this limitation is needed to prevent the use of other denaturants that might adversely impact vehicle emissions performance. We believe that the ASTM specifications are already in use by industry and, therefore, EPA's adoption of the same specifications would not result in an increased burden to DFE producers. We further believe that limiting the type of gasoline blendstocks that can be used as denaturant to BOBs would not impose a new burden on DFE producers since other gasoline blendstocks would not typically be available to DFE producers. We request comment on whether there should be an allowance for other gasoline blendstocks to be used as ethanol denaturants.

With regard to benzene, olefins, and aromatics, we believe that these proposed requirements along with Internal Revenue Service ethanol denaturant requirements would limit benzene, olefins, and aromatics content of DFE to very low levels. Therefore, we are not proposing any limits on these parameters in DFE. Nevertheless, we are requesting comments on whether we should adopt the State of California's benzene, olefin, and aromatics specifications for DFE. We are also proposing to limit the maximum concentration of denaturant that can be used in DFE to 2 volume percent. Under the RFS2 regulations, if the denaturant level is 2 volume percent or less (effectively less than 2.5 volume percent considering rounding) the entire volume of denatured fuel ethanol can be used for determining compliance with the RFS2 renewable fuel volume requirements.[385]

We also request comment on whether to require manufacturers of denaturants for use in DFE to register with EPA, and demonstrate compliance with the maximum sulfur, benzene, olefins, and aromatics specifications enforced in the State of California based on the anticipated dilution with ethanol. We believe that such additional requirements on the denaturants used to manufacture DFE would not be necessary given that DFE producers would be required to meet the proposed specifications and the proposed requirement that denaturant concentration in DFE be limited to a maximum of 2 volume percent.

We propose that producers of DFE would be required to meet the proposed fuel quality requirements for their product and provide batch reports to EPA. This is similar to the requirements for gasoline refiners. This approach would provide an appropriate level of assurance on the quality of DFE which has become such a large component in the gasoline fuel pool. We believe that this approach would not result in additional burden to ethanol producers beyond the annual batch reports that they would need to submit to EPA and the information they provide on product transfer documents (PTDs). Currently, under the fuel and fuel additives registration requirements at 40 CFR part 79, manufacturers of DFE are required to register their products with EPA prior to introducing DFE into commerce. Also, DFE producers currently test each batch of their product in order to provide assurance to blenders that it meets the current fuel quality requirements. This information is critical to ethanol blenders to avoid testing each batch of an ethanol blend that they manufacture. The proposed requirements would facilitate unfettered downstream ethanol blending.

We are also proposing that the proposed fuel quality specifications and requirements for DFE (except those related to the use of denaturants) would apply to other oxygenates used in gasoline. We are proposing that the oxygenate quality requirements would become effective for oxygenate producers/importers on January 1, 2017. We are proposing that oxygenate producers and importers would be required to register by December 1, 2016, or 30 days prior to the date when they produce/import oxygenate (which ever date is later). Registration under the RFS program would be sufficient to fulfill this proposed requirement. We are proposing that oxygenate blenders be required to begin using oxygenates that comply with the proposed requirements beginning March 1, 2017. We also seek comment on the ability of these blenders to comply with the proposed requirements earlier, and appropriateness of such an earlier compliance date.

D. Standards for Fuel Used in Flexible Fueled Vehicles

FFVs are vehicles that are capable of operating on both gasoline and gasoline blends containing up to 85 volume percent denatured ethanol. Whether FFVs are operating on clear gasoline (E0), E85, or any level of ethanol in between, to maintain emission

[379] 40 CFR 80.385(e).

[380] California Code of Regulations, Title 13, Section 2262.9, ''Requirements Regarding Denatured Ethanol Intended For Use as a Blend Component in California Gasoline''.

[381] The current California requirements which are based on a maximum 5 percent denaturant level in DFE are as follows: maximum 1.1 volume percent benzene, maximum 10 volume percent olefins, and maximum 35 volume percent aromatics. ASTM International Standard D4806–11(a), ''Standard Specification for Denatured Fuel Ethanol for Blending with Gasolines for Use as Automotive Spark-Ignition Engine Fuel'' requires that the maximum denaturant concentration in DFE is 5 volume percent.

[382] RFA publication entitled ''Fuel Ethanol, Industry Guidelines, Specifications and Procedures,'' 2011.

[383] For example, Aventine Renewable Energy Fuel-Grade Ethanol specifications at *http://www.aventinerei.com/pdfs/fuel_grade_spec.pdf.*

[384] ASTM International D4806–11(a), ''Standard Specification for Denatured Ethanol for Blending with Gasolines for Use as Automotive Spark-Ignition Engine Fuel''.

[385] See the definition of Renewable Fuel in 40 CFR 80.1401.

performance the vehicles still need the fuel to meet certain quality specifications, such as the 10-ppm average gasoline sulfur standard proposed today. We anticipate that the volume of higher level ethanol blends used in FFVs may increase substantially as the volume requirements of the RFS program increase. Significant public and private initiatives are also currently underway to expand the use of ethanol blender pumps that dispense a variety of ethanol blends for use in FFVs.[386] Therefore it is becoming increasingly important that all fuels used in FFVs, not just gasoline, meet fuel quality standards. A lack of clarity regarding the standards that apply to fuels used in FFVs could act to impede the further expansion of ethanol blended fuels, which is important to satisfying the requirements of the RFS program. For these reasons, we believe it is important that our gasoline quality standards for not just sulfur, but also benzene, Reid Vapor Pressure (RVP), detergency, and compliance with the interpretive rule defining the phrase ''substantially similar'' in CAA section 211(f)(1)[387] (i.e., contain only carbon, hydrogen, oxygen, nitrogen, and sulfur) apply to any fuel used in an FFV. At the same time, it is not necessarily clear how we should implement such standards within the context of our existing regulations. For this reason we are seeking comment on appropriate regulatory mechanisms for doing so. The following sections discuss potential approaches for gasoline-ethanol blends both above and below 50 percent ethanol. We have also developed a possible approach, along with draft regulations, that are included in the docket on which we specifically seek comment.[388]

1. Standards for E51–83

Historically, ''E85'' has been used to describe fuel blends containing gasoline and ethanol with a minimum and maximum ethanol content of 68 volume percent and 83 volume percent, respectively. The recent update to the ASTM International specification for ''E85'' included a reduction in the minimum ethanol concentration to 51 volume percent.[389] As part of the updated specification, ASTM retired the name ''E85'' in favor of ''ethanol fuel blends for flexible-fuel automotive spark-ignition engines.'' ASTM took this action because the term ''E85'' has caused confusion regarding the variability in the ethanol content depending upon seasonal climactic conditions and regional gasoline volatility specifications. For the purposes of this discussion, ''E51–83'' refers to the fuel which meets the new ASTM D5798–11 specifications.

Currently, only reformulated gasoline blendstocks for oxygenate blending (RBOBs) and gasoline that has previously been demonstrated to comply with applicable EPA specifications (reformulated gasoline (RFG) and conventional gasoline (CG)) are used to manufacture E51–83.[390] The Agency believes that the use of these blendstocks prevents inappropriate blending components (e.g., chemical wastes) from being used in the production of E51–83. Use of these blendstocks would also help ensure that E51–83 meets the necessary sulfur levels we are proposing today. We note, however, that use of only these blendstocks is interfering with expansion of E51–83 into the marketplace by preventing blends at the upper range of the allowed ethanol content. At higher ethanol concentrations, blenders often cannot meet the minimum volatility specifications set by ASTM for cold start performance when using only BOBs and gasoline. Prior to the recent update of the ASTM specifications, it was frequently not possible to manufacture ''E85'' that met both the ASTM minimum volatility specification and the EPA requirements regarding the blendstocks that can be used. As a result, some marketers discontinued distributing ''E85.'' Although the ASTM update provided a compliance method for manufacturing E51–83, the result is that less ethanol can be used in FFVs, because the ethanol concentration is forced down from 83 percent toward the 51 percent minimum.

To address this situation, we believe that we need to prescribe requirements for E51–83 that would enable the continued expansion into the marketplace. We believe that such requirements could focus more on the product and less on how it is made. We also believe that E51–83 should meet the same sulfur, RVP, and benzene standards otherwise applicable to gasoline as well as the ''substantially similar'' requirements. We are therefore seeking comments on whether we could extend these requirements to E51–83. We note that establishing such requirements could allow the use of butane and natural gasoline liquids (NGL) to manufacture E51–83 with sufficient volatility to meet the ASTM specifications. Butane is commonly blended into gasoline and NGL is the denaturant specified by ASTM for the manufacture of DFE.[391] Additionally, because NGL and butane are less expensive than gasoline or BOBs, we anticipate that such a change could help to reduce the price of E51–83 relative to finished gasoline.[392]

Further, we note that requiring E51–83 to meet the same standards as gasoline would subject E51–83 manufacturers to all the sampling, testing, and reporting obligations of refiners. While this would provide maximum blending flexibility, it could also limit the parties that might choose to blend E51–83. Currently oxygenate blenders are exempt from much of this regulatory burden. For this reason, we are also seeking comments on whether we could establish requirements that would allow producers of E51–83 to avoid the compliance burdens of a refiner. We are seeking comments on one such approach that would require the use of only blendstocks that meet certain specifications to produce E51–83. We believe that use of only blendstocks (including butane and NGL) that meet these specifications would ensure the final blend would always meet the standards. These approaches are discussed in greater detail in the docket for this rulemaking.[393] We seek comment on these approaches, and any other approaches that could be used to remove hurdles for blending of E51–83 while still ensuring the product meets the fuel quality requirements needed to maintain vehicle emission performance.

2. Standards for Mid-Level Ethanol Blends (E16–50)

As discussed earlier, whether FFVs are operating on clear gasoline (E0), E85, or any level of ethanol in between, to maintain emission performance these

[386] The U.S. Department of Agriculture (USDA) has a program to assist in the funding for the installation of as many as 10,000 ethanol blender pumps over the next 15 years in rural areas. Growth Energy has a ''Blend Your Own Ethanol'' program to encourage the installation of ethanol blender pumps.

[387] 73 FR 22277, 22281 (April 25, 2008).

[388] Herzog, J. (January 2012). Possible Approach to Fuel Quality Standards for Fuel Used in Flexible-Fuel Automotive Spark-Ignition Vehicles (FFVs), Memorandum to the docket.

[389] ASTM International D5798–11, ''Standard Specification for Flexible-Fuel Automotive Spark-Ignition Engines''.

[390] Letter to Robert Sydney, Division of Energy Resources, Boston, MA, from James Caldwell, U.S. EPA, February 15, 2006.

[391] ASTM International D4806–11(a), ''Standard Specification for Denatured Ethanol for Blending with Gasolines for Use as Automotive Spark-Ignition Engine Fuel''.

[392] In August of 2011 the retail price of E85 was approximately 60 cents per gallon more than gasoline on an energy content adjusted basis.

[393] Herzog, J. (January 2012). Possible Approach to Fuel Quality Standards for Fuel Used in Flexible-Fuel Automotive Spark-Ignition Vehicles (FFVs), Memorandum to the docket.

vehicles still need the fuel to meet certain quality specifications. For this reason, we believe it is important that higher ethanol blends also meet the same standards that apply to gasoline. Our various standards for gasoline already apply to any fuel sold for use in motor vehicles, which is commonly or commercially known or sold as gasoline. In the fuel and fuel additive registration program, the gasoline family includes fuels composed of at least 50 percent clear gasoline by volume.[394] As a result, our gasoline standards already apply to E16–50 ethanol blends. And yet, such fuels currently can only be used in FFVs. Therefore, in addition to seeking comment on the need to have E16–50 blends comply with the gasoline sulfur, benzene, and RVP standards, we also seek comment on the means of doing so. For example, can and should the Agency simply treat E16–50 as gasoline under our regulations and clarify that gasoline means any fuel that contains 50 percent or more gasoline? Alternatively, should the Agency treat E16–50 as an alternative fuel used in FFVs? In which case we seek comment on whether we should take the same approach for E16–50 as discussed above for E51–83 with respect to sulfur, benzene, RVP standards, and substantially similar requirements under section 211(f).

In the context of considering whether and how to apply gasoline standards and requirements to E16–50 we also seek comment on whether it might be an appropriate reading of our regulatory and statutory authority to allow E16 to E50 blends to have higher RVP levels than otherwise required by our regulations for gasoline. As the ethanol level increases, the volatility increase caused by blending ethanol with gasoline begins to decline, such that at E30 there is only about a 0.5-psi RVP increase. While still an increase compared to the standards that apply to gasoline other than E9–10, it is considerably less than the full 1-psi RVP increase that results at E10. The evaporative emission increase caused by E30 would then be less than for E10. Thus, we seek comment on whether it would be an appropriate reading of our regulatory and statutory authority to allow higher RVP levels for such blends, at least in some limited situations and time frames (e.g., using existing regulatory research exemptions for demonstration programs) where new efforts are being made to introduce such blends into the market. We further seek comment on data that might help quantify both the evaporative and exhaust emission impacts necessary to support any such action.

E. Proposed Program Flexibilities

1. Averaging, Banking, and Trading Program

As mentioned in Section V.A.2.b, we are proposing an ABT program which reduces the cost and promotes the feasibility of the program by allowing refiners and importers to choose the most economical compliance strategy (investment in technology, credits, or both) to meet the proposed Tier 3 average gasoline sulfur standard. The program allows refiners and importers to generate standard credits for overcompliance with the 10-ppm sulfur standard beginning in 2017. These credits could be generated indefinitely and banked or transferred to others for compliance with the average sulfur standard. The proposed program also permits refiners and importers to generate early credits for overcompliance with today's 30-ppm average sulfur standard from 2014 to 2016. Early credits may be used towards compliance with the 10-ppm standard beginning in 2017, banked for use through 2019, and/or transferred to other refiners or importers subject to the sulfur standard.

a. Eligibility

Under the ABT program, we are proposing that U.S. refiners who produce gasoline by processing crude oil and/or intermediate feedstocks through refinery processing units are eligible to generate both early credits (2014–2016) and standard credits (2017 and later). As proposed, importers are also eligible to generate both early and standard sulfur credits on gasoline imported into the United States.

We are proposing that sulfur credits may only be generated for gasoline that is subject to the proposed sulfur requirements as described at § 80.1603. This excludes gasoline designated for export. It also excludes California gasoline (gasoline produced or imported for use in California) but includes gasoline produced by California refineries for use outside the state. Although California gasoline is not covered by our proposed sulfur program, we seek comment on whether to include California gasoline in the ongoing ABT program under Tier 3 (not the early credit program). The result would be a national 10-ppm average gasoline sulfur standard. This approach could provide some additional compliance flexibility to refiners, but it would also require reporting of batch data to EPA for California gasoline.

We have received inquiries whether fuel ethanol producers or blenders should be eligible to generate credits under the proposed gasoline sulfur program. Denatured fuel ethanol currently contains around 9 ppm sulfur on average, ranging anywhere from 2 to almost 30 ppm.[395] While certain batches of ethanol could theoretically be low enough in sulfur to generate credits, it is our desire to limit credit generation to companies required to comply with the proposed Tier 3 sulfur standards, i.e., refiners and importers. Experience in the unleaded gasoline program suggests widespread abuse and fraud when credits have been allowed to be generated or sold by non-obligated parties. Thus, in order to allow ethanol producers (or blenders) to generate sulfur credits under Tier 3, they would need to be treated as refiners and subject to our batch testing, reporting, and recordkeeping requirements for the finished gasoline they produce.[396] Currently, downstream blenders are exempt from these regulations because the certification and compliance burden is being borne by the upstream refiners.[397] Furthermore, since many refiners currently comply with our standards taking into consideration the fuel property changes expected as a result of downstream ethanol blending, providing ethanol blenders with sulfur credit would result in double counting the effects of ethanol. To avoid this, we would need to restructure our gasoline regulations to shift the point of compliance to the many terminals and bulk plants where ethanol is blended and finished gasoline is produced instead of the refinery gate. While possible, this would significantly expand the amount of sampling, testing, recordkeeping, and reporting required to demonstrate compliance with our gasoline standards. It would also considerably expand the amount of sampling, testing, recordkeeping, and reporting required of ethanol blenders. As discussed in Section V.C, we are proposing a cap of 10 ppm on the sulfur content of denatured fuel ethanol (DFE). Over compliance with the per-gallon cap would not be a valid basis for credit generation, as you would expect that in all cases the DFE would be below the

[394] 40 CFR 79.56(e)(1)(i).

[395] Report on Ethanol Producers Survey, Presented at the California Phase 3 Reformulated Gasoline Regulation Workshop, June 15, 2000, Carl Reeder, Archer Daniels Midland.

[396] 40 CFR 80.330, 80.335, 80.365, and 80.370.

[397] Under the proposed Tier 3 program, as explained in Section V.C, we are requiring fuel ethanol producers to comply with the 10-ppm standard. However, for the reasons discussed above, we still do not believe it is appropriate to allow them to generate sulfur credits under the proposed ABT program.

cap. To allow credit generation, we would need to propose an additional annual average sulfur standard for DFE at some level below 10 ppm, and allow credits to be generated for over compliance with that standard. Accordingly, we do not believe it is appropriate to allow ethanol producers or blenders to generate sulfur credits under the proposed gasoline sulfur program.

b. Standard Credit Generation

Under the Tier 3 ABT program, we are proposing standard credit generation provisions similar to those offered under Tier 2 as well as the MSAT2 gasoline benzene program. We are proposing an ongoing sulfur credit program that would allow refiners and importers to average within and across companies to meet the new 10-ppm average sulfur standard in the most cost-effective manner possible. Refiners and importers could generate standard credits for overcomplying with the 10-ppm standard on a volume-weighted annual average basis beginning January 1, 2017. Standard credit generation periods would be 12 months long and synchronized with compliance demonstration periods.

We are proposing that small refiners and small volume refineries could generate standard credits beginning with the start of their program on January 1, 2020. Eligible small refining entities could also generate standard credits for over compliance with the 10-ppm standard from January 1, 2017 through December 31, 2019 by voluntarily opting in to the Tier 3 sulfur program during a time period when it would otherwise not apply. Regardless of whether they were generated early or not, all standard credits generated by small refiners and small volume refineries would be subject to the credit life provisions described in Section V.E.1.d. For a summary of the small refiner and small volume refinery ABT provisions, refer to Section V.E.1.f.

c. Early Credit Generation

To encourage early gasoline desulfurization and give the refining industry flexibility to stagger their investments over time, we are proposing that refiners and importers could also generate early credits for overcomplying with today's 30-ppm gasoline sulfur standard on a volume-weighted annual average basis from January 1, 2014 through December 31, 2016. Under the ABT program, we are proposing that refiners and importers would not need to establish a gasoline sulfur baseline or meet a trigger point in order to generate early credits. They would simply need to demonstrate that their average U.S. gasoline sulfur levels are below today's 30-ppm Tier 2 standard during the early credit generation period. We believe this simple early credit approach is possible because U.S. gasoline is currently averaging around 30 ppm today based on compliance data. Since during the proposed early credit generation period refiners and importers would need to continue to comply with the existing Tier 2 sulfur standards, absent Tier 3, they would need to maintain this level of performance on an industry average basis. Accordingly, any additional gasoline sulfur reductions beyond 30 ppm could thus be attributed to the proposed Tier 3 program.

Refiners and importers supplying gasoline containing less than 30 ppm sulfur from January 1, 2014 through December 31, 2016 could choose from generating either standard credits under the existing Tier 2 program or early credits under the proposed Tier 3 program, but not both (at least not for the same volume of gasoline). Sulfur credits would be generated on an annual average basis. Refiners and importers could make the decision at the end of the year whether credits generated in 2014, 2015 or 2016 would be more valuable used/traded to comply with the Tier 2 program or banked for the Tier 3 program. Some year-end credits could be designated as Tier 2 and some designated as Tier 3 provided the same volume of gasoline was only used to generate one type of credit. We believe that the proposed early credit program structure is the simplest approach to giving refiners and importers incentive for doing more sulfur control earlier than required and providing additional lead time to meet the Tier 3 annual average standard. We seek comments on alternative ways to structure the early credit program to help ease the transition from Tier 2 to Tier 3.

Under past fuel programs (e.g., MSAT2), we precluded importers from generating early credits under the premise that they did not need additional lead time to comply with our fuel standards because, most likely, they would not be investing in new refining technologies. We also thought it would be difficult for them to establish representative baselines from which early credits could be generated. Since we are not proposing early credit baselines under Tier 3, as discussed above, we are proposing to allow importers to generate early credits for sending over-compliant gasoline to the United States prior to the start of the program, but seek comment on the appropriateness of doing so.

d. Credit Life Provisions

Under the Tier 3 ABT program, we are proposing that early credits must be used towards compliance within three years from the start of the program; otherwise they would expire and become invalid. In other words, early credits must be applied towards the 2017, 2018 or 2019 compliance years. After February 29, 2020, all early credits would expire and become invalid. The proposed three-year early credit life provision would offer considerable flexibility to refiners phasing in Tier 3 gasoline sulfur controls while still placing a 2020 end date at which point the intended sulfur program is fully implemented and enforceable. It would provide a date certain by when auto manufacturers could have confidence for the design of their vehicles that all vehicles in-use are running on 10 ppm average fuel. Otherwise, it is possible that the greater ease of generating early credits relative to 30 ppm sulfur (as opposed to 10 ppm in 2017 and beyond) could allow higher sulfur levels to continue well beyond 2019. Refiners that are able to generate early credits may choose to hold onto them for later use, rather than trade them to other refiners who may need them sooner. The proposed three-year early credit life provision would also be consistent with the duration of the small volume refinery provisions described below. We seek comment on the lifetime of early credits and the implications on in-use sulfur levels beyond 2019 should we allow them to have a longer credit life.

We are proposing that standard credits must be used within five years from the year they were generated (regardless of when/if they are traded); otherwise they would expire and become invalid. For example, standard credits generated in 2017 could be applied towards 2018–2022 compliance, as well as 2017 compliance. After February 28, 2023, standard credits generated in 2017 would expire and become invalid. Similarly, standard credits generated in 2018 could be applied towards 2019–2023 compliance, as well as 2018 compliance. After February 29, 2024, standard credits generated in 2018 would expire, and so on and so forth.

We believe the five-year standard credit life provision, when final, would give refiners and importers sufficient time to use credits generated in previous years while still placing limitations on credit life that would help with enforcement. Five years is consistent with the proposed recordkeeping and reporting requirements (described in more detail in Section V.F.1) as well as

the current Tier 2 and MSAT2 standard credit life provisions.

e. Credit Trading Provisions

It is possible that sulfur credits could be generated by one party, subsequently transferred or used in good faith by another, and later found to have been calculated or created improperly or otherwise determined to be invalid. If this occurs, as in past fuel programs, we are proposing that both the seller and purchaser would have to adjust their sulfur calculations to reflect the proper credits and either party (or both) could be determined to be in violation of the standards and other requirements if the adjusted calculations demonstrate noncompliance with the 10-ppm standard.

Under the proposed Tier 3 ABT program, sulfur credits must be transferred directly from the refiner or importer generating them to the party using them for compliance purposes. This ensures that the parties purchasing them are better able to assess the likelihood that the credits are valid. An exception exists where a credit generator transfers credits to a refiner or importer who inadvertently cannot use all the credits. In this case, the credits could be transferred a second time to another refiner or importer. After the second trade, the credits must be used or they would be terminated. Allowing a maximum of two trades is consistent with other recent fuel programs and we believe it is sufficiently flexible while still preserving adequate means for enforcement. Nonetheless, we seek comment on the need for allowing more than two trades for sulfur credits under the proposed Tier 3 program.

There are currently no prohibitions against brokers facilitating the transfer of credits from one party to another. Any person can act as a credit broker, regardless of whether such person is a refiner or importer, as long as the title to the credits is transferred directly from the generating refiner or importer to the using refiner or importer. This prohibition on outside parties taking ownership of credits was promulgated in response to problems encountered during the unleaded gasoline program and has since appeared in subsequent fuels rulemakings. Maintaining this prohibition would allow for maximum program enforceability and consistency with all of our other ABT programs for mobile sources and their fuels. Nonetheless, we seek comment on the need for this restriction under the proposed Tier 3 program.

f. Summary of ABT Provisions for Small Refiners and Small Volume Refineries

We are proposing that small refiners and small volume refineries would have an additional three years to comply with the 10-ppm annual average standard, or until January 1, 2020. This is the primary form of relief offered to small refining entities under the proposed Tier 3 gasoline sulfur program. The proposed credit provisions are similar to those offered to non-small refiners. Eligible small refiners and small volume refineries would be able to generate early credits for overcomplying with the 30-ppm Tier 2 standard from January 1, 2014 through December 31, 2016. Like non-small refiners, they would need to make the decision whether these credits would be more valuable under the Tier 2 program or the proposed Tier 3 program. While early credits could help postpone investments by up to three years, they could not be used by small refiners or small refineries to postpone sulfur investments beyond their January 1, 2020 start date. However, early credits generated by small entities from 2014–2016 could be traded/sold to non-small refiners subject to the January 1, 2017 standard and the credit revenues could be used to help offset their Tier 3 investments.

As explained above, small refiners and small volume refineries could generate standard credits relative to the 10-ppm standard beginning with the start of their program on January 1, 2020. Eligible small refining entities could also generate standard credits for over compliance with the 10-ppm standard from January 1, 2017 through December 31, 2019 by voluntarily opting in to the Tier 3 sulfur program earlier than required. Regulatory flexibility provisions offered to small refiners and small volume refineries are described in more detail below.

2. Regulatory Flexibility Provisions

a. Small Business Regulatory Flexibility Provisions

As in previous fuel rulemakings, our justification for including provisions specific to small businesses is that these entities generally have a greater degree of difficulty in complying with the standards compared to other entities.

In developing the proposed Tier 3 gasoline sulfur program, we evaluated the environmental need as well as the technical and financial ability of refiners and others in the fuel industry to meet the sulfur standards as expeditiously as possible. We believe it is feasible and necessary for the vast majority of the program to be implemented in the established time frame to achieve the air quality benefits as soon as possible. Based on information available from small refiners and others, we believe that entities classified as small generally face unique circumstances with regard to compliance with environmental programs, compared to larger entities. Thus, as discussed below, we are proposing several regulatory flexibility provisions for small entities in the fuels industry to reduce the burden that our proposed program could have on them.

Small entities generally lack the resources that are available to larger companies, including those large companies that own small-capacity refineries, to raise capital for investing in a new regulatory program, such as shifting of internal funds, securing of financing, or selling of assets. Small entities are also likely to have more difficulty in competing for any needed engineering and construction resources. As such, we are proposing provisions that would provide assistance for small entities in meeting the proposed Tier 3 standards. This proposed approach would allow the overall program to begin as early as possible; achieving the air quality benefits of the program as soon as possible, while helping to ensure that small entities have adequate time to raise capital for new fuel desulfurization equipment or to make any other needed changes. We believe that small business regulatory flexibilities could provide these entities with additional help and/or time to accumulate capital internally or to secure capital financing from lenders, and could spread out the availability of any needed engineering and construction resources.

i. Delayed Standards for Small Refiners

As explained in Sections V.A.1.c and V.E.1.f, we are proposing an option that would allow small refiners to postpone compliance with the Tier 3 program for up to three years. This delayed compliance schedule for small refiners is not intended as an opportunity for those refiners to greatly expand their production of >10 ppm sulfur gasoline, but rather would help small refiners with compliance with the program. Since the compliance costs for their competitors would rise during these three years and since their gasoline would be sold into the same fungible market, this delay would not only provide them more lead time, but also financial support towards later compliance. Small refiners choosing this option would have from January 1, 2017 through December 31, 2019 to continue production of gasoline with an average sulfur level of 30 ppm (per the

Tier 2 gasoline sulfur program). Compliance with the 10-ppm sulfur standard would begin on January 1, 2020. Any small refiner choosing this option would be allowed to continue using Tier 2 gasoline sulfur credits through December 31, 2019 to meet their refinery average 30-ppm sulfur standard (however, these credits may not be used for compliance with the proposed Tier 3 10-ppm average sulfur standard).

ii. Refinery Gate and Downstream Caps

During the Small Business Regulatory Enforcement Fairness Act (SBREFA) Panel process, small refiners raised the concern that a refinery gate cap of 20 ppm could cause problems during a refinery turnaround or an upset because a cap of this level could result in a refiner not being able to produce saleable gasoline. The Panel likewise had concerns that a downstream cap of 25 ppm may cause problems for small downstream entities such as transmix processors because, as they noted in their comments during the Panel process, transmix processors may not be able to reprocess finished gasoline down to this level. Thus, the Panel recommended that EPA assess and request comment on retaining the current Tier 2 refinery gate and downstream caps of 80 and 95 ppm, respectively, to help provide maximum flexibility and avoid system upsets for the entire refining and distribution system. Further, the Small Business Administration (SBA) and Office of Management and Budget (OMB) Panel members recommended that EPA propose retaining the 80-ppm and 95-ppm caps. The Panel also recommended that, if EPA were to propose caps lower than 80 and 95 ppm, the Agency request comment on additional refinery gate and downstream caps that are above 20/25 ppm but below 80/95 ppm.

As discussed in Section XI.C, we are proposing to either maintain the current 80/95 ppm caps or to lower them to 50/65 ppm. Should we lower the caps to 50/65 ppm, given the stringency of the 10-ppm average standard, we anticipate that they would provide the same level of flexibility for refiners, pipelines, terminals, transmix processors, and gasoline additive manufacturers as the current 80/95 ppm caps. Should we lower the caps to 50/65, we are proposing to allow the current Tier 2 80-ppm refinery gate cap to remain in place through December 31, 2019. Compliance with the 50-ppm refinery gate cap would begin on January 1, 2020, when the 10-ppm average sulfur standard is required for all refiners. Similarly, we are proposing to allow the Tier 2 95-ppm downstream cap to remain in effect through February 29, 2020. Compliance with the 65-ppm downstream cap would begin on March 1, 2020. For more information on the proposed cap provisions, refer to Section V.A.3.

iii. Credit-Related Flexibilities

As described above in Section V.E.1, we are proposing an ABT program. Refiners and importers would be able to generate early sulfur credits from January 1, 2014 through December 31, 2016 relative to the current 30-ppm Tier 2 average sulfur standard (i.e., credits may be generated for any reductions below 30 ppm prior to the start of the general Tier 3 program). Beginning January 1, 2017 standard credits may be generated for overcompliance with the proposed 10-ppm Tier 3 sulfur standard. In addition, small refiners and small volume refineries would be able to generate standard credits from January 1, 2017 through December 31, 2019 for reductions below 10 ppm prior to their proposed program start date of January 1, 2020.

During the SBREFA Panel process, one Small Entity Representative (SER) commented that importers should be allowed to participate in the credit program. In previous EPA fuel programs, importers have generally been treated as refiners, except for the purposes of early credit generation. Refiners have historically been required to establish a baseline in order to generate early credits. Importers generally do not have a specific baseline or amount of fuel that they import in a given year, so participation in the early credit market would not have been feasible under those programs. However, under the proposed Tier 3 sulfur program, refiners and importers are not required to establish baselines; the existing 30-ppm Tier 2 standard serves as the ''baseline.'' Therefore, as discussed above in Section V.E.1.c, we are proposing to allow importers to participate in the early credit program as well as the ongoing standard credit program.

iv. Gasoline Additive Manufacturers

During the SBREFA Panel process, some gasoline additive manufacturing SERs raised the concern that they would have difficulty meeting a 25-ppm per-gallon sulfur cap, and the Panel recommended that EPA request comment on whether or not gasoline additives should be allowed to remain at levels above 25 ppm sulfur, and on potential methods for ensuring that bulk additives do not increase the sulfur level of the resultant fuel blend. However, as discussed above and in Section V.A.3, we are proposing to either retain the current 80/95 ppm caps or only go to 50/65 ppm. Both of these options would have the same 15-ppm differential between the refinery gate and downstream caps, thus we are not proposing any additional provisions for gasoline additives beyond what already exists under the current Tier 2 program.

b. Small Volume Refinery Provisions

During the development of this proposal and throughout the SBREFA process, it became evident that some refineries may experience higher compliance costs on a per-gallon basis than other refineries, and in some cases considerably higher. It also became apparent that in many of these cases it was not necessarily a refinery owned by a refiner/company that would meet the SBA definition of a small business (however, these refineries tend to be small volume refineries). In an oversupplied gasoline market, these refineries may have difficulty justifying capital investments to comply with the proposed sulfur standard. In recognition of this concern under the RFS program, Congress granted all small refineries with a crude oil throughput of less than or equal to 75,000 barrels per calendar day (bpcd) additional time to comply. As such, we are also proposing delayed Tier 3 sulfur standards for approved small volume refineries. Overall, we believe that these small refineries are disproportionally impacted when it comes to their cost of compliance and ability to rationalize the investment costs in today's gasoline market. Giving these refineries additional lead time would allow them more time to invest in desulfurization technology, take advantage of advancements in technology, develop confidence in a Tier 3 credit market as a means of compliance, and avoid competition for capital, engineering, and construction resources with the larger refineries. We are proposing that approved small volume refineries would receive a three-year delay (January 1, 2017 through December 31, 2019) in meeting the 10-ppm average gasoline sulfur standard, similar to the small refiner delay. Credit generation opportunities for approved small volume refineries would be identical to those proposed for small refiners as described in Section V.E.1.f.

A refiner would need to apply and be approved for small volume refinery status. We are proposing a small volume refinery net crude throughput of less than or equal to 75,000 bpcd, and we request comment on whether or not a different crude throughput would be more appropriate. To determine compliance with this threshold, we

propose to base the crude throughput on the highest crude throughput for either the 2010 or 2011 calendar years.

3. Provisions for Refiners Facing Hardship Situations

As in previous fuel programs, we are proposing hardship provisions to accommodate a refiner's inability to comply with the proposed standard at the start of the Tier 3 program, and to deal with unforeseen circumstances that may occur at any point during the program. These provisions would be available to all refiners, small and non-small, though relief would be granted on a case-by-case basis following a showing of certain requirements; primarily that compliance through the use of credits was not feasible. We are proposing that any hardship waiver would not be a total waiver of compliance; rather, a hardship waiver would be short-term relief that would allow a refiner facing a hardship situation to, for example, receive additional time to comply. EPA would determine appropriate hardship relief based on the nature and degree of the hardship, as presented by the refiner in their hardship application, and on our assessment of the credit market.

In addition to the unforeseen circumstances and extreme hardship circumstances waivers being proposed today and discussed in more detail below, the Panel also recommended that EPA request comment on the concept of long-term cap relief should we lower the sulfur caps below the current 80/95-ppm level if the circumstances both warrant it and can be structured in a way to allow for it. Such a provision may require segregation of their fuel through to the retail station in order for it not to preclude enforcement on the gasoline supplied by other refiners serving the area. Therefore, in providing comment on such a hardship provision, please also comment on potential compliance and enforcement mechanisms to account for such longer-term relief, e.g., fuel segregation, tracking, reporting and recordkeeping, etc.

a. Temporary Waivers Based on Unforeseen Circumstances

We are proposing a provision which, at our discretion, would permit any refiner to seek a temporary waiver from the Tier 3 sulfur standards under certain rare circumstances. This waiver provision is similar to provisions in existing fuel regulations. It is intended to provide refiners relief in unanticipated circumstances—such as a refinery fire or a natural disaster (i.e., *force majeure*)—that cannot be reasonably foreseen now or in the near future. Under this provision, a refiner could seek a hardship waiver for relief if it could demonstrate that the magnitude of the impact was so severe as to require such an extension. We are proposing that the refiner would be required to show that: (1) The waiver would be in the public interest; (2) the nonconformity was unavoidable; (3) it would meet the proposed Tier 3 standards as expeditiously as possible; (4) it would make up the air quality detriment associated with the nonconforming gasoline, where practicable; and (5) it would pay to the U.S. Treasury an amount equal to the economic benefit of the nonconformity less the amount expended to make up the air quality detriment. These conditions are similar to those in previous fuels regulations, and are necessary and appropriate to ensure that any waivers granted would be limited in scope.

As discussed, such a request would be based on the refiner's inability to produce compliant gasoline at the affected facility due to extreme and unusual circumstances outside the refiner's control that could not have been avoided through the exercise of due diligence. The hardship request would also need to show that other avenues for mitigating the problem, such as the purchase of credits toward compliance under the proposed credit provisions, had been pursued and yet were insufficient or unavailable. In light of the proposed flexibilities including the ABT program, we expect that the need for such requests would be rare.

b. Temporary Waivers Based on Extreme Hardship Circumstances

In addition to the provision for short-term relief in extreme unforeseen circumstances, we are also proposing a hardship provision where a refiner could receive a hardship waiver based on severe economic or physical lead time limitations of the refinery to comply with the Tier 3 standards at the start of the program. A refiner seeking such hardship relief under this proposed rule would have to demonstrate that these criteria were met. In addition to showing that unusual circumstances exist that impose extreme hardship in meeting the proposed standards, the refiner would have to show that: (1) It has made best efforts to comply, including through the purchase of credits; (2) the relief granted under this provision would be in the public interest; (3) the environmental impact would be acceptable; and (4) it has active plans to meet the requirements as expeditiously as possible. We expect that hardship relief requests under this provision would mostly be applicable at the beginning of the Tier 3 program, when refiners are making their investments to comply. If hardship relief under these circumstances was approved, we would expect to impose appropriate conditions to ensure that the refiner was making best efforts to achieve compliance offsetting any loss of emission control from the program. We believe that providing short-term relief to those refiners that need additional time due to hardship circumstances would help to facilitate the adoption of the overall Tier 3 program for the majority of the industry. However, we do not intend for hardship waiver provisions to encourage refiners to delay planning and investments they would otherwise make. Again, because of the flexibilities of the proposed overall program, we expect that the need for additional relief would be rare.

F. Compliance Provisions

For the most part, the proposed Tier 3 sulfur standards simply reflect a lowering of the current Tier 2 sulfur standards. Thus, we are proposing to retain most of the same compliance provisions as the current Tier 2 program, with exceptions as noted. However, we are also proposing and seeking comment on several fuel program regulatory streamlining measures, including a broader program redesign to streamline the reformulated gasoline and anti-dumping regulations.[398] Some of these streamlining measures, if adopted, may also impact the Tier 3 sulfur compliance provisions proposed below. FF

1. Registration, Reporting, and Recordkeeping Requirements

Registration, recordkeeping, and reporting are necessary to track compliance with the Tier 3 standards and the ABT program. This section describes the proposed compliance provisions of today's program.

a. Registration Requirements

We are proposing that refiners, importers, and anyone acting as a refiner (e.g., a terminal with blending or other refining operations) who expects to produce or import gasoline would be required to register each of its facilities with EPA by June 1, 2016, or six months prior to producing gasoline meeting the Tier 3 standards and/or participating in the credit program. After the program begins on January 1, 2017, any non-

[398] For more information on Part 80 regulatory streamlining options, refer to Section VI.

registered parties must register at least three months prior to producing gasoline or participating in the credit market under the Tier 3 program. Most refiners, importers, and ethanol producers are currently registered with EPA under other 40 CFR part 80 fuels programs. We are proposing that those who are already registered would not have to register again.

For registration, we are proposing to use the same basic forms that previous fuels programs have used. These forms are well known in the regulated community and are simple to fill out. Upon receipt of a completed registration form, EPA would issue a unique 4-digit company identification number and a unique 5-digit facility identification number. As with existing fuels programs, these numbers would be required for all reports sent to EPA and for PTDs.

Registrations would not expire and would not have to be renewed; however, we are proposing that registered parties would be responsible for notifying us of any change to their company or facility information.

An entity's registration must include a corporate name and address (including the name, telephone number, and email address of a corporate contact); and, for each facility operated by the entity:

- Type of facility (e.g., refinery, import facility, pipeline, terminal, transmix facility, etc.)
- Facility name.
- Physical location.
- Contact name, telephone number, and email address.

b. Reporting Requirements

We are proposing to require refiners and importers to submit annual reports demonstrating their compliance with the Tier 3 standards and on the generation, use, and transfer of sulfur credits at each of its refineries or import facilities. Similar to our other sulfur programs, we are also proposing to require refiners and importers to submit data on individual batches of gasoline (including batch volume and sulfur content). Based on our experience with existing gasoline and sulfur-based programs, we believe that requiring annual reports and individual sulfur batch data would provide an effective means of monitoring compliance with the standards and the credit program.

We are proposing that manufacturers of DFE and other oxygenates would be required to submit an annual report that includes the total volume of DFE/oxygenate produced and an attestation that all batches met the proposed fuel quality requirements: sulfur content, composition (i.e., composed only of carbon, hydrogen, nitrogen, oxygen, and sulfur), and denaturant concentration as applicable.

We are proposing that reports would be due annually on March 31.

c. Recordkeeping Requirements

Similar to current EPA fuels programs, we are proposing that refiners and importers would be required to retain all records that demonstrate compliance with the Tier 3 program, including ABT program information.

We are proposing that manufacturers of DFE and other oxygenates would be required to keep records on individual batches of DFE/oxygenate (including batch volume, sulfur content, and denaturant concentration as applicable).

All parties in the gasoline production and distribution system subject to today's proposed rule would also be required to keep records of all PTDs and records of any quality assurance programs. Records would need to be retained for five years. For credit transactions, records would need to be retained for five years from the usage date. Records would need to be made available to EPA on request. We are also proposing that if electronic records are kept, hard copies should be made available upon request.

We are proposing to allow parties to claim information submitted to EPA as confidential business information (CBI). Parties making such a claim would be required to follow all reporting guidance and clearly mark the information being claimed as proprietary. EPA would treat information covered by such a claim in accordance with the regulations at 40 CFR part 2 and other Agency procedures for handling proprietary information.

2. Sampling and Testing Requirements

Under the Tier 2 program, a sulfur concentration must be determined for every batch of gasoline. We are proposing to retain that requirement under Tier 3. As with the Tier 2 program, this every batch testing requirement would be required to occur prior to the batch leaving the refinery. We are proposing to retain the current sampling, testing, and sample retention requirements. However, as discussed below in Section VI.A.3, we are proposing performance based measurement standards that would allow refiners to use alternate test methods for measuring sulfur.

We are proposing that manufacturers of DFE would be required to test each individual batch of DFE for its sulfur content.

We request comment on these elements related to sampling and testing, as well as the sampling and testing requirements in the proposed regulations.

3. Small Refiner Compliance

To qualify for small refiner status under the Tier 3 program, we are proposing that a refiner must apply by March 31, 2014. As with our other EPA fuels programs, we are proposing to continue using the Small Business Administration definition of a small refiner: 1,500 employees (company-wide). To qualify for small refiner status under Tier 3, we are also proposing that a small refiner must meet the following additional criteria:

- The refiner must have produced gasoline from crude oil during the 2011 calendar year.
- The refiner must have owned and operated the refinery during the period from January 1, 2011 through December 31, 2011. New owners that purchased a refinery after that date would do so with full knowledge of the proposed regulations, and should have planned to comply along with their purchase decisions. As with existing fuel programs, we are proposing that a refiner that restarts a refinery in the future may be eligible for small refiner status. Thus, a refiner restarting a refinery that was shut down or non-operational during calendar year 2011 could apply for small refiner status. In such cases, we would judge eligibility under the employment and crude oil capacity criteria based on the most recent 12 consecutive months prior to the application, unless we conclude from data provided by the refiner that another period of time is more appropriate. However, we propose to limit this to a company that owned the refinery at the time that it was shut down. New purchasers would not be eligible for small refiner status for the same reasons described above.
- The refiner must have had 1,500 employees or less based on the average number of employees for all pay periods from January 1, 2011 through December 31, 2011 for all subsidiaries, parent companies (i.e., any company or companies with controlling interest), and joint ventures.
- The refiner must have had a crude oil capacity less than or equal to 155,000 bpcd during the 2011 calendar year.

A refiner applying for status as a small refiner would be required to apply and provide EPA with several types of information, as specified in the regulations, by March 31, 2014. All refiners seeking small refiner status under this program would need to apply for small refiner status, regardless of

whether or not the refiner had been approved for small refiner status under another fuel program. As with applications for relief under other rules, applications for small refiner status under this proposed rule that are later found to contain false or inaccurate information would be void *ab initio.*

Requirements for small refiner status applications:

- The total crude oil capacity as reported to the Energy Information Administration (EIA) of the U.S. Department of Energy (DOE) for the most recent 12 months of operation. This would include the capacity of all refineries controlled by a refiner and by all subsidiaries and parent companies and joint ventures. We would presume that the information submitted to EIA is correct. (In cases where a company disagreed with this information, the company could petition EPA with appropriate data to correct the record when the company submitted its application for small refiner status. EPA could accept such alternate data at its discretion.)
- The name and address of each location where employees worked during the 2011 calendar year; and the number of employees at each location during this time period. This would include the employees of the refiner and all subsidiaries and parent companies and joint ventures.
- In the case of a refiner who reactivates a refinery that was either shutdown or non-operational from January 1, 2011 through December 31, 2011, the name and address of each location where employees worked since the refiner reactivated the refinery and the average number of employees at each location for each calendar year since the refiner reactivated the refinery.
- The type of business activities carried out at each location.
- Contact information for a corporate contact person, including: name, mailing address, phone and fax numbers, email address.
- A letter signed by the president, chief operating officer, or chief executive officer of the company (or a designee) stating that the information contained in the application was true to the best of his/her knowledge and that the company owned the refinery as of January 1, 2011.

We are proposing that an approved small refiner that exceeds the employee count or crude capacity criteria due to merger with, acquisition by, or the acquisition of another entity will lose its small refiner status. In situations where a small refiner loses its small refiner status due to merger with a non-small refiner, acquisition of another refiner, or acquisition by another refiner, we are proposing provisions which are similar to those in our existing fuels programs to allow an additional 30 months of lead time to comply with the Tier 3 program after the disqualifying event.[399] The proposed 30 months of additional lead time would only apply to refineries that had previously been subject to small refiner relief, as we believe there would be no adverse environmental impact because of the pre-existing relief provisions that applied to the small refiner. We are also proposing that a refiner would lose its small refiner status if it ceases to process crude oil.

Our intent has been, and continues to be, limiting the small refiner relief provisions to a small subset of refiners that are challenged, as discussed above. However, it is also our intent to avoid stifling normal business growth. Therefore, we are proposing that an approved small refiner who exceeds the employee count or crude oil capacity criteria through normal business practices, may retain its small refiner status. Further, in the sole case of a merger between two approved small refiners we are proposing to allow such refiners to retain their small refiner status. Additional financial resources would not typically be provided in the case of a merger between two small refiners. Small refiner status for the two entities of the merger would not be affected; hence the original compliance plans of the two refiners should not be impacted. Moreover, no environmental detriment would result from the two small refiners maintaining their small refiner status within the merged entity as they would have likely maintained their small refiner status had the merger not occurred.

We request comment on whether or not these provisions remain appropriate.

4. Small Volume Refinery Compliance

In the case of small volume refineries, the application process for qualification is similar to that of a small refiner. A refiner that is both a small refiner and owns a small volume refinery need not apply for small volume refinery status; the small refiner application is all that is needed. We are proposing a net crude throughput threshold of no more than 75,000 bpcd based on the highest throughput in calendar years 2010 or 2011 as the basis for receiving small volume refinery status. We request comment on whether or not another threshold would be more appropriate.

We are proposing that refiners would need to include the following in their applications:

- Proof that the refiner produced gasoline from crude oil during the 2011 calendar year.
- Proof that the refiner owned and operated the refinery during the period from January 1, 2011 through December 31, 2011.
- The refinery's total crude throughput as reported to EIA for each of calendar years 2010 and 2011. Again, we would presume that the information submitted to EIA is correct. In cases where a refiner disagrees with this information, the refiner could petition EPA with appropriate data to correct the record when the refiner submits its application for small volume refinery status. EPA could accept such alternate data at its discretion.
- Contact information for a corporate contact person, including: name, mailing address, phone and fax numbers, email address.
- A letter signed by the president, chief operating officer, or chief executive officer of the company (or a designee) stating that the information contained in the application was true to the best of his/her knowledge and that the company owned the refinery as of January 1, 2011.

5. Attest Engagements, Violations, and Penalties

We are proposing to retain the Tier 2 requirements for attest engagements for generation of both early and standard credits, use of credits, and compliance with the proposed program, using the procedures used in other EPA fuels programs for attest engagements. The violation and penalty provisions applicable to today's proposed program would be very similar to the provisions currently in effect in other gasoline programs as well. We request comment on the need for additional attest engagement, violation, penalty, or any other compliance and enforcement related provisions specific to the proposed Tier 3 program.

6. Special Fuel Provisions and Exemptions

The following paragraphs discuss several provisions and exemptions for gasoline that we are proposing would apply in special circumstances.

a. Gasoline Used in Military Applications

In our diesel fuel program, we provided an exemption for diesel fuel used in tactical military vehicles and nonroad engines and equipment with a national security exemption (NSE) from the vehicle and engine emissions standards. Due to national security considerations, some of EPA's existing

[399] See, for example, 69 FR 39051 (June 29, 2004).

regulations allow the military to request and receive NSEs for vehicles, engines, and equipment from emissions regulations if the operational requirements for such vehicles, engines, or equipment warrant such an exemption. Fuel used in these applications would also be exempt if it is used in tactical military vehicles, engines, or equipment that are not covered by an NSE but, for national security reasons (such as the need to be ready for immediate deployment overseas), these applications need to be fueled on the same fuel as those with an NSE. We are proposing this exemption under the proposed Tier 3 gasoline program.

b. Gasoline Used in Research, Development, and Testing

Similar to other EPA fuels programs, we are proposing to allow requests for an exemption from the Tier 3 standards for gasoline used for research, development, and testing purposes (''R & D exemption''). We recognize that there may be legitimate research programs that require the use of gasoline with sulfur levels greater than those allowed under the proposed Tier 3 program. Thus, we are proposing provisions for obtaining an exemption from the prohibition against persons producing, distributing, transporting, storing, selling, or dispensing gasoline that does not meet the Tier 3 gasoline sulfur standards, where such fuel is necessary to conduct a research, development, or testing program.

Parties seeking an R & D exemption would be required to submit an application for exemption to EPA that describes the purpose and scope of the program, and the reasons why the noncompliant gasoline is necessary. Upon presentation of the required information, an exemption could be granted at the discretion of EPA, with the condition that EPA could withdraw the exemption in the event the Agency determines the exemption is not justified. In addition, an exemption based on false or inaccurate information would be considered void *ab initio.* Gasoline subject to an exemption would be exempt from certain provisions of this rule, including the sulfur standards, provided certain requirements are met. These requirements include the segregation of the exempt gasoline from non-exempt gasoline, identification of the exempt gasoline on PTDs, and pump labeling.

c. Gasoline for Export

Gasoline produced for export, and that is actually exported for use in a foreign country, would be considered exempt from the fuel content standards and other requirements of this proposed rule. Such gasoline would be considered as intended for use in the U.S. and subject to the proposed standards unless it is designated by the refiner and the PTD states that the gasoline is for ''export only''. Gasoline intended for export would be required to be segregated from all gasoline intended for use in the U.S. Distributing or dispensing such fuel for domestic use would be illegal.

d. Other Special Provisions and Potential Exemptions

We are proposing provisions for Alaska that would allow the refinery gate and downstream caps to remain at the current Tier 2 80-ppm and 95-ppm levels, respectively, should the caps be lowered to 50 and 65 ppm (per Section V.A.3).

Additionally, in previous fuels programs we have included exemptions for racing fuel and for fuel used in the U.S. territories of Guam, American Samoa, and the Northern Mariana Islands. We request comment on whether or not such exemptions would be needed for this program.

G. Statutory Authority for Proposed Tier 3 Fuel Controls

We are proposing gasoline sulfur controls under our authority in section 211(c)(1) of the Clean Air Act. This section gives us the authority to ''control or prohibit the manufacture, introduction into commerce, offering for sale, or sale'' of any fuel or fuel additive for use in a motor vehicle, motor vehicle engine, or nonroad engine or nonroad vehicle (1) whose emission products, in the judgment of the Administrator, cause or contribute to air pollution which may reasonably be anticipated to endanger the public health or welfare [section 211(c)(1)(A)] or (2) whose emission products will impair to a significant degree the performance of any emission control device or system which is in general use, or which the Administrator finds has been developed to a point where in a reasonable time it would be in general use were the fuel control or prohibition adopted [section 211(c)(1)(B)]. We are proposing controls on gasoline sulfur levels based on both of the Clean Air Act criteria, as described in more detail below.

1. Section 211(c)(1)(A)

Under the first criterion, we believe that emission products of gasoline with current levels of sulfur contribute to ambient levels of ozone, particulate matter (PM), nitrogen dioxide (NO_2), sulfur dioxide (SO_2) and carbon monoxide (CO), which are all pollutants for which EPA has established National Ambient Air Quality Standards (NAAQS). These pollutants are linked with respiratory and/or cardiovascular problems and other adverse health impacts leading to increased medication use, hospital admissions, emergency department visits, and premature mortality. Approximately 159 million people currently live in counties exceeding a NAAQS.[400] Motor vehicles also emit air toxics, and the majority of Americans continue to be exposed to ambient concentrations of air toxics at levels which have the potential to cause adverse health effects, including cancer, immune system damage, and neurological, reproductive, developmental, respiratory, and other health problems.[401] A more detailed discussion of the health and environmental effects of these pollutants is included in Section II.B. As discussed in this section, emissions of these pollutants cause or contribute to ambient levels of air pollution that are reasonably anticipated to endanger public health and welfare. Control of gasoline sulfur to 10 ppm will lead to significant, cost-effective reductions in emissions of these pollutants, with the benefits to public health and welfare significantly outweighing the costs.

EPA has evaluated the technical feasibility of achieving these sulfur levels, including the cost of the reductions and the impact on fuel supply. As discussed in Section V.A, we have concluded that these reductions are feasible in the lead time provided and should not have an adverse impact on the adequacy of gasoline fuel supply to meet demand. For more on the feasibility of the proposed fuel program, refer to Chapter 4 of the draft RIA.

As discussed in Section III, EPA also evaluated the emissions reductions from pre-Tier 3 vehicles that would be achieved by controlling gasoline sulfur levels. These reductions are significant and contribute to the total monetized health benefits. EPA also evaluated the cost per ton of emissions reduced for the proposed program, of which the 10-ppm sulfur standard is a part. As can be seen in Section VII.D, the program is very cost-effective in 2030. Even in 2017, when the emission reductions are almost entirely due to the sulfur standards (and the costs are attributed to

[400] Data come from Summary Nonattainment Area Population Exposure Report, current as of July 20, 2012 at: *http://www.epa.gov/oar/oaqps/greenbk/popexp.html* and contained in Docket EPA–HQ–OAR–2011–0135.

[401] U.S. EPA. (2011) Summary of Results for the 2005 National-Scale Assessment. *www.epa.gov/ttn/atw/nata2005/05pdf/sum_results.pdf.*

both the fuel and vehicle standards), the cost-effectiveness of the program is reasonable. In sum, EPA concludes that the entire body of evidence strongly supports the view that controlling gasoline sulfur to 10 ppm is quite reasonable in light of the emissions reductions and benefits achieved, taking costs into consideration. For more detail on the costs and benefits of the proposed standards, refer to Chapter 8 of the draft RIA.

The control of gasoline sulfur down to 10 ppm provides significant reductions in harmful emissions. The fuel program is cost-effective and produces benefits to public health and welfare whose value significantly outweighs the costs. These reductions can be achieved in a manner that is technologically feasible, and will not disrupt fuel supply.

Section 211(c)(2)(A) requires that, prior to adopting a fuel control based on a finding that the fuel's emission products contribute to air pollution that can reasonably be anticipated to endanger public health or welfare, EPA must consider ''all relevant medical and scientific evidence available, including consideration of other technologically or economically feasible means of achieving emission standards under [section 202 of the Act].'' EPA's analysis of the medical and scientific evidence relating to the emissions impact from motor vehicle engines, which are impacted by gasoline sulfur, is described in more detail in Chapter 6 of the draft RIA. EPA has also satisfied the statutory requirement to consider ''other technologically or economically feasible means of achieving emission standards under section [202 of the Act].'' This provision has been interpreted as requiring consideration of establishing emission standards under section 202 prior to establishing controls or prohibitions on fuels or fuel additives under section 211(c)(1)(A). See *Ethyl Corp.* v. *EPA,* 541 F.2d. 1, 31–32 (DC Cir. 1976). In *Ethyl,* the court stated that section 211(c)(2)(A) calls for good faith consideration of the evidence and options, not for mandatory deference to regulation under section 202 compared to fuel controls. *Id.* at 32, n.66. EPA is also proposing Tier 3 emissions standards for motor vehicles under section 202. In order to meet these more stringent standards, the program requires a reduction in the sulfur content of gasoline to the 10-ppm annual average.

2. Section 211(c)(1)(B)

Under the second criterion, we believe that sulfur in gasoline will significantly impair the emission-control systems expected to be in general use in motor vehicle engines designed to meet the Tier 3 emission standards proposed in this rule. EPA is proposing to restrict gasoline sulfur content to an annual average of 10 ppm beginning in 2017, to enable compliance with new emission standards based on the use of advanced emission control technology that will be available to Tier 3 engines and California's Low Emission Vehicle (LEV III) program.

Section IV describes the substantial adverse effect of high gasoline sulfur levels on the emission-control devices or systems for Tier 3 vehicles and engines meeting the proposed emission standards. As discussed in Section IV.A.6, modern three-way catalytic exhaust systems utilize platinum group metals (PGM), metal oxides, and other active materials to selectively oxidize organic compounds and carbon monoxide in the exhaust gases. These systems simultaneously reduce nitrogen oxides when air-to-fuel ratio control operates in a condition of relatively low amplitude/high frequency oscillation about the stoichiometric point. Sulfur is a well-known catalyst poison. There is a large body of work demonstrating sulfur inhibition of the emissions control performance of PGM three-way exhaust catalyst systems. The nature of sulfur interactions with washcoat materials, active catalytic materials and catalyst substrates is complex and varies with catalyst composition and exhaust gas composition and exhaust temperature. The variation of these interactions with exhaust gas composition and temperature means that the operational history of a vehicle is an important factor; continuous light-load operation, throttle tip-in events and enrichment under high-load conditions can all impact sulfur interactions with the catalyst.

Operating the catalyst at a sufficiently high temperature under net reducing conditions (e.g., air-to-fuel equivalence that is net fuel-rich of stoichiometry) can effectively release the sulfur oxides from the catalyst components. Thus, regular operation at sufficiently high temperatures at rich air-to-fuel ratios can minimize the effects of fuel sulfur levels on catalyst active materials and catalyst efficiency. However, it cannot completely eliminate the effects of sulfur poisoning. A study of Tier 2 vehicles in the in-use fleet recently completed by EPA shows that emission levels immediately following high speed/load operation is still a function of fuel sulfur level, suggesting that lower fuel sulfur levels will bring emission benefits unachievable by catalyst regeneration procedures alone. Furthermore, regular operation at these temperatures and at rich air-to-fuel ratios is not desirable, for several reasons. The temperatures necessary to release sulfur oxides are high enough to lead to thermal degradation of the catalyst over time via thermal sintering of active materials. Sintering reduces the surface area available to participate in reactions. Additionally, it is not always possible to maintain these catalyst temperatures (because of cold weather, idle conditions, light load operation) and the rich air-to-fuel ratios necessary can result in increased PM, NMOG and CO emissions. Thus, reducing fuel sulfur levels has been the primary regulatory mechanism to minimize sulfur contamination of the catalyst and ensure optimum emissions performance over the useful life of a vehicle.

The impact of gasoline sulfur has become even more important as vehicle emission standards have become more stringent. Some studies have suggested an increase in catalyst sensitivity to sulfur (in terms of percent conversion efficiency) when standards increase in stringency and emissions levels decrease. Emission standards under the programs that preceded the Tier 2 program (Tier 0, Tier 1 and National LEV, or NLEV) were high enough that the impact of sulfur was considered negligible. The Tier 2 program recognized the importance of sulfur and reduced the sulfur levels in the fuel from around 300 ppm to 30 ppm in conjunction with the new emission standards. At that time, very little work had been done to evaluate the effect of further reductions in fuel sulfur—especially on in-use vehicles that may have some degree of catalyst deterioration due to real-world operation.

In 2005, EPA and several automakers jointly conducted a program that examined the effects of sulfur and other gasoline properties, benzene, and volatility on emissions from a fleet of nine Tier 2 compliant vehicles. Subsequently, EPA conducted a much more extensive study of the effects of sulfur on emissions from Tier 2 vehicles. These studies demonstrate that emissions from Tier 2 vehicles continue to be very sensitive to gasoline sulfur levels below the current 30-ppm average standard. For more on the estimated emission impacts, refer to Section III.B.

Furthermore, vehicles already capable of meeting the proposed Tier 3 standards have been found to be extremely sensitive to the effects of sulfur. A Chevy Malibu was tested and found to be able to meet the proposed Tier 3 standards on low-sulfur gasoline, but following operation on higher-sulfur

gasoline, its emission levels exceeded the standard. As explained in Section IV.A, following operation over 2 FTP cycles on 33 ppm sulfur fuel, NO_X emissions alone were more than double the proposed Tier 3 30 mg/mi NMOG+NO_X standard.

Overall, the Tier 3 Program would reduce fleet average NMOG+NO_X emissions by over 80 percent. The feasibility of the proposed 30 mg/mi NMOG+NO_X fleet average standard depends on a degree of emissions control from exhaust catalyst systems that will require gasoline at 10 ppm sulfur or lower. The most likely control strategies would involve using exhaust catalyst technologies and powertrain calibration primarily focused on reducing cold-start emissions of NMOG and on both cold-start and warmed-up (running) emissions of NO_X. An important part of this strategy, particularly for larger vehicles having greater difficulty achieving cold-start NMOG emissions control, will be to reduce NO_X emissions to near-zero levels. This would allow sufficient NMOG compliance margin to allow vehicles to meet the combined NMOG+NO_X emissions standards for the full useful life.

Achieving the proposed Tier 3 emission standards would require very careful control of the exhaust chemistry and exhaust temperatures to ensure high catalyst efficiency. The impact of sulfur on oxygen storage components in the catalyst makes this a challenge even at relatively low (10 ppm) gasoline sulfur levels.

The negative impact of gasoline sulfur on NO_X, NMOG and air toxic emissions occurs across all vehicle categories. However, the impact of gasoline sulfur on NO_X emissions control of catalysts in the fully-warmed-up condition is particularly of concern for larger vehicles. Manufacturers face the most significant challenges in reducing cold-start NMOG emissions for these vehicles. Because of the need to reach near-zero NO_X levels, any significant degradation in NO_X emissions control over the useful life of the vehicle would likely prevent some if not most larger vehicles from reaching a combined NMOG+NO_X low enough to comply with the 30 mg/mi fleet-average standard. These vehicles represent a sufficiently large segment of light-duty vehicle sales now and in the foreseeable future that their emissions could not be offset (and thus the fleet-average standard achieved) by certifying vehicles to bins below the fleet average. Any degradation in catalyst performance due to gasoline sulfur would reduce or eliminate the margin necessary to ensure in-use compliance with the proposed Tier 3 emissions standards. Certifying to a useful life of 150,000 miles vs. the current 120,000 miles would further add to manufacturers' compliance challenge for Tier 3 large light trucks (refer to Section IV.7.b for more on the useful life requirements).

The impact of gasoline sulfur poisoning on exhaust catalyst performance and the relative stringency of the Tier 3 standards, particularly for larger vehicles and trucks, when considered together make a compelling argument for the virtual elimination of sulfur from gasoline. As discussed in Section V.A.2, the proposed 10-ppm standard for sulfur in gasoline represents the lowest practical limit from a standpoint of fuel production, handling and transport. While lowering gasoline sulfur to levels below 10 ppm would help ensure in-use vehicle compliance with the Tier 3 standards, the Agency believes that a gasoline sulfur standard of 10 ppm would allow compliance with a national fleet average of 30 mg/mi NMOG+NO_X. The level of the Tier 3 standards was considered in light of a 10-ppm average sulfur level for gasoline. Not only should a 10-ppm sulfur standard enable vehicle manufacturers to certify their entire product line of vehicles to the Tier 3 fleet average standards, but based on the results of testing both Tier 2 vehicles and SULEV vehicles as discussed above, reducing gasoline sulfur to 10 ppm should enable these vehicles to maintain their emission performance in-use over their full useful life.

Section 211(c)(2)(B) requires that, prior to adopting a fuel control based on a significant impairment to vehicle emission-control systems, EPA consider available scientific and economic data, including a cost benefit analysis comparing emission-control devices or systems which are or will be in general use that require the proposed fuel control with such devices or systems which are or will be in general use that do not require the proposed fuel control. As described below, we conclude that the emissions control technology expected to be used to meet Tier 3 standards would be significantly impaired by operation on gasoline with annual average sulfur levels greater than 10 ppm. Our analysis of the available scientific and economic data can be found elsewhere in this document. The draft RIA includes a detailed analysis of the environmental benefits of the emission standards (Chapters 6 and 8), an analysis of the technological feasibility and cost of controlling sulfur to the levels established in the final rule (Chapters 4 and 5), and a cost-effectiveness analysis of the sulfur control and motor vehicle and engine emission standards (Chapter 9). Under section 211(c)(2)(B), as just noted, EPA is also required to compare the costs and benefits of achieving emission standards through emission-control systems that would not be sulfur-sensitive, if any such systems are or will be in general use. We have determined that there are not (and will not be in the foreseeable future) emission control devices available for general use in motor vehicles that can meet the emission standards and would not be significantly impaired by gasoline with current gasoline sulfur levels. Emissions cannot be reduced anywhere near the magnitude contemplated by the proposed emission standards without the application of the kind of emissions control technology discussed in this proposal.

Section 211(c)(2)(C) of the Clean Air Act requires that prior to prohibiting a fuel or fuel additive, EPA establish that such prohibition will not cause the use of another fuel or fuel additive ''which will produce emissions which endanger the public health or welfare to the same or greater degree'' than the prohibited fuel or additive. This finding is required by the Act only prior to prohibiting a fuel or additive, not prior to controlling a fuel or additive. Since EPA is not prohibiting use of gasoline sulfur, but rather is controlling the level of sulfur in these fuels, this finding is not required for this rulemaking. However, EPA does not believe that the proposed gasoline sulfur controls will result in the use of any other fuel or additive that will produce emissions that will endanger public health or welfare to the same or greater degree as the emissions produced by gasoline with current sulfur levels. Unlike the case of unleaded gasoline in the past, where lead performed a primary function by providing the necessary octane for the vehicles to function properly, sulfur does not serve any useful function in gasoline. It is not added to gasoline, but occurs naturally in the crude oil into which gasoline is processed. Were it not for the expense of sulfur removal, it would likely have been removed from gasoline years ago in order to improve the maintenance and durability characteristics of motor vehicle engines.

We are also adopting the various controls for DFE, other oxygenates, butane blended into gasoline, and gasoline additives, under our authority in section 211(c)(1). As explained above, these controls are necessary to prevent emissions products that may endanger the public health or welfare or impair to

a significant degree the performance of any emission control device or system. The proposal basically extends various controls on gasoline to DFE, other oxygenates, butane, and gasoline additives. The reasons for adopting the controls for gasoline apply as well to adopt the controls for DFE, other oxygenates, butane, and gasoline additives.

VI. Technical Amendments and Regulatory Streamlining

In addition to proposing new Tier 3 vehicle standards and new gasoline sulfur standards, we are also proposing and seeking comment on a number of technical amendments and regulatory streamlining actions as part of the Regulatory Review initiative. Some of these may have some bearing on implementation of the proposed Tier 3 vehicle and fuel standards, while others deal with other aspects of EPA's existing vehicle and fuel regulations.

EPA is also proposing to synchronize a number of different reporting deadlines under various regulations affecting transportation and motor vehicle fuels and fuel additives. This action would reduce regulatory burdens by aligning reporting deadlines across several programs and would lay the foundation for the overall goal of combining various fuels reports together into a single, simplified electronic format.

A. Amendments to 40 CFR Parts 79 and 80

The following sections discuss our proposed changes to regulations in 40 CFR part 79 and part 80. Some of these changes are technical amendments to correct minor errors or inconsistencies in the regulations; others are to address areas in the regulations that could benefit from clarification and/or streamlining.

With regard to regulatory streamlining, the majority of these items involve clarifying vague or inconsistent language, removal or updating of outdated provisions, and decreasing the frequency and/or volume of reporting burden where data is either no longer needed or is redundant in light of other EPA fuels programs. In general, we believe that these changes would reduce burden on industry with no expected environmental impact. We believe that the regulatory streamlining items that we are proposing are changes that are straightforward and that should be made quickly. There are also additional items that would need further consideration and discussion, such as a new fuels program compliance structure, as discussed below in Section VI.A.1.b. We are also requesting comment on expanding the downstream butane blending provisions to allow for pentane blending, as discussed in Section VI.A.4.

1. Regulatory Streamlining

a. Summary of Proposed Amendments

Below is a table listing the provisions that we are proposing to amend in today's action. We have provided additional explanation for those amendments that warrant additional explanation below.

TABLE VI–1—SUMMARY OF PROPOSED REGULATORY STREAMLINING AND TECHNICAL AMENDMENTS

Section	Description
Varied	Various sections amended to update references to test methods (see Section Section VI.A.1.a.iii).
79.5	Revises periodic reporting requirements.
80.2	Revises and adds definitions.
80.8	Amended to update sampling test methods, and to state to which fuels § 80.8 applies.
80.10	Added to allow for de minimis changes in compliance reports that would not require a resubmission of compliance reports when a minor discrepancy of a few barrels is uncovered.
80.46	Revises measurement of RFG fuel parameters.
80.47	Revises Performance-Based Test Method Approach.
80.65	Amended to reduce complex model test parameters and reporting.
80.65(f)(5)	Added to allow for designation of an alternative lab.
80.75	Revises RFG reporting requirements.
80.82	Amended to apply butane blending provisions to entire part 80 and to revise RVP test method.
80.101	Revises measurement of conventional gasoline fuel parameters.
80.105	Amended to require identification of test methods used and revises reporting requirements.
80.161(b)(1)(ii)(A)(*2*)	Amended to allow an alternative gasoline detergent certification option.
80.161(b)(1)(ii)(A)(*3*)	Added to allow an alternative detergent certification option.
80.161(b)(2)	Amended to address the submission of gasoline detergent samples under the alternative gasoline detergent certification option.
80.161(b)(3)(ii)(C)	Amended to reflect that documentation of the fuel injector deposit demonstration test would be required under the alternative detergent certification option.
80.161(b)(3)(v)	Amended to state that the results of the intake valve and fuel injector deposit demonstration test must be submitted to EPA as part of the certification letter under the alternative detergent certification option.
80.161(b)(3)(viii)	Amended to change "PFID test" to "fuel injector test".
80.161(d)(1)	Amended to reflect the availability of the alternative gasoline detergent certification option.
80.163(a)(1)(iii)	Amended to allow use of the alternative gasoline detergent certification option.
80.164(a)	Amended to reference the test fuel requirements under the alternative gasoline detergent certification option.
80.165	Amended the introductory paragraph to accommodate the alternative deposit control test procedures and standards under the alternative gasoline detergent certification option.
80.167(a)	Amended the introductory paragraph to specify how confirmatory testing would be conducted for additives certified under the alternative gasoline detergent certification option.
80.176	Added to specify the certification test procedures and standards under the alternative gasoline detergent certification option.
80.177	Added to specify the certification test fuels under the alternative gasoline detergent certification option.
80.178	Incorporates standards and test methods by reference.
80.330	Revises sampling and testing requirements.
80.370	Amended to require identification of test method used and revises reporting requirements.
80.511	Revises per-gallon and marker requirements.
80.572	Revises labeling requirements.
80.573	Revises labeling requirements.
80.574	Revises labeling requirements.

TABLE VI–1—SUMMARY OF PROPOSED REGULATORY STREAMLINING AND TECHNICAL AMENDMENTS—Continued

Section	Description
80.580	Incorporates test methods by reference.
80.585	Revises test method approval process.
80.604	Revises reporting requirements.
80.1235(a)(6),	Amended to allow refiners and importers who are blending blendstock into previously certified gasoline (PCG) an alternative to directly test the blendstock for benzene.
80.1235(a)(5)	Amended to clarify that refiners and importers may use either approach for blendstocks that are blended into either conventional gasoline or reformulated gasoline.
80.1235(b)(2)	Amended to clarify EPA's intent (per § 80.1238(b)) to allow refiners and importers to include oxygenate blended downstream of a refinery or import facility in their annual average benzene calculation, and to make the section consistent with § 80.1238(b).
80.1238	Revises benzene determination.
80.1347(a)(5)	Amended to require that a negative annual average must be reported as zero, and that a refiner must comply with § 80.65(i) when producing RBOB or RFG and § 80.101(g)(9) when producing conventional gasoline.
80.1347(a)(6)	Added to allow refiners and importers who are blending blendstock into previously certified gasoline (PCG) an alternative to directly test the blendstock for benzene.
80.1348	Revises sample retention requirements.
80.1349	Added to allow importers who import gasoline into the U.S. by truck to use the sampling and testing requirements in 40 CFR part 80 subpart E as an alternative to the sampling and testing requirements in subpart L.
80.1354	Revises reporting requirements for gasoline benzene program.
80.1451	Revises RFS reporting requirements.

i. Amendments Related to Reduction of Testing for Complex Model Fuel Parameters

In §§ 80.65 and 80.75, we are proposing to streamline and reduce the RFG and CG testing and reporting burden of gasoline refiners and importers by reducing the testing and reporting requirements of certain fuel parameters associated with the complex model. Currently, for RFG, every parameter listed in § 80.65 must be tested for every batch and each parameter must be reported for every batch. No monthly compositing of batch samples is allowed for any parameter. For conventional gasoline, monthly compositing and batch reporting based on those monthly composites is allowed for all parameters except sulfur and benzene. However, with the phasing out of complex model standards, reduced testing and reporting is appropriate, particularly for RFG. In cases where a refiner is subject to only benzene, RVP, and sulfur standards, certain parameters no longer need to be tested and reported on an every-batch basis. However, the full slate of complex model parameters will still be needed in some cases. Specifically, refiners producing RFG during the summer VOC control season will still need to use the complex model to determine VOC performance, and thus must still measure and report the relevant complex model fuel parameters. In addition, small refiners that are subject to the delayed compliance option for the 0.62 volume percent benzene standard will have to use the complex model until 2015 for CG MSAT1 compliance.[402] Currently, there are 17 complex model parameters on the RFG/anti-dumping batch report. We are proposing to eliminate reporting for American Petroleum Institute (API) gravity. In addition, oxygenates need not be reported unless the refiner's gasoline includes oxygenates or the refiner is including downstream added oxygenate in its compliance calculations. Apart from being necessary for use in the complex model, these parameters have little use for program compliance. In addition, we are proposing to reduce testing and reporting as follows: For both RFG and conventional gasoline we propose to eliminate the requirement to test and report API gravity for batch certification purposes. For winter RFG, we propose to eliminate the requirement to test and report the following parameters on an every batch basis and instead allow testing and reporting of monthly composites: aromatics, distillations and olefins. Winter sulfur and benzene would continue to be tested and reported on an every batch basis. All summer complex model parameters would still be required to be tested and reported on an every batch basis. For conventional gasoline, since the regulations already allow for testing and reporting most parameters on a monthly composite basis, the only significant change would be to eliminate the batch certification testing and reporting for API gravity. Only benzene, sulfur, and any oxygenates that are actually included in the gasoline batch must be tested and reported on an every-batch basis (except for refiners that are still subject to a complex model toxics standard; they must test all parameters but may use monthly composite testing and reporting except for sulfur and benzene, and oxygenate, where applicable). The values for aromatics, olefins, and distillation terms may continue to be determined from monthly composites. These changes would substantially reduce the testing and reporting associated with each batch. We request comment on this reduced testing scheme.

ii. Amendments Related to Reporting

EPA is proposing to amend various provisions in 40 CFR parts 79 and 80 to reduce the number of different reporting deadlines that regulated parties must meet and to enable the future use of a unified and simplified reporting form. EPA's goal is to simplify reporting and reduce the number of hours parties spend preparing and submitting reports. This overall effort responds to Executive Orders 13563 and 13610, which direct government agencies to simplify rules and to achieve reductions in paperwork and reporting burdens, and is part of EPA's agency-wide effort to streamline regulatory reporting requirements.

Currently under 40 CFR parts 79 and 80, there are ten separate cyclical reporting dates each year (eleven in a leap year). This proposal would amend these deadlines so that all affected programs use the same four dates. Programs that would be affected by this proposal include the fuels and fuel additives registration program (40 CFR part 79, subpart A), the Reformulated Gasoline and Anti-Dumping program (40 CFR part 80, subparts D and E), the Gasoline Sulfur program (40 CFR part 80 subpart H), the Motor Vehicle, Nonroad, Locomotive, and Marine Diesel program (40 CFR part 80 subpart

[402] 61 FR 17230 (March 29, 2001).

I), the Gasoline Benzene program (40 CFR part 80 subpart L), and the Renewable Fuel Standard program (40 CFR part 80 subparts K and M). We are proposing that reporting deadlines would be standardized as follows: June 1, for all reports covering quarter 1 of the compliance year; September 1, for quarter 2; December 1, for quarter 3; and March 31 for quarter 4. End of year compliance reports would also be due on March 31.

These proposed changes would either delay or maintain current deadlines for nearly all required reports. Deadlines for all other annual reports would either be maintained if they matched the new quarterly deadline, or extended to match the new quarterly deadline.

These proposed changes would not include ''Attest Engagements'' or reporting related to specific events under the Fuels Program, such as trading Renewable Identification Numbers (RINS) in EPA's Moderated Transaction System (EMTS). All reporting deadlines for Attest Engagements and reporting specific events would remain the same.

Respondents would still have the option to report earlier than any given deadline. Additionally, these deadline changes would allow EPA to develop a single electronic format that would collect all required data and maximize the capability of electronic reporting with data reuse, no duplicate fields, and a user-friendly interface.

We would also be correcting a typographical error in 40 CFR 80.1451(f)(2) and clarifying that reports are to be signed by the ''responsible corporate officer.'' Additionally, we would remove an incorrect reference under 79.5(a)(2).

iii. Amendments To Update Test Methods

Refiners, importers and oxygenate blenders producing gasoline and diesel motor vehicle fuel are required to test RFG, CG and diesel fuel for various fuel parameters including aromatics, benzene, distillation, olefins, oxygenate content, RVP, and sulfur. A number of relevant regulatory provisions currently have references to test methods that have since been revised and updated. We are proposing to update those test methods to reflect current test methods in order to ensure that all test methods are readily available to the regulated community. ASTM International (ASTM) test method D2622 is currently the designated test method for measuring sulfur (§§ 80.46(a)(1), 80.580(b)(2)), in gasoline and diesel fuel at the 500 ppm sulfur standard. ASTM test methods D5453, D6920, D3120 and D7039 are currently alternative test methods for measuring sulfur (§§ 80.46(a)(3)(i), 80.46(a)(3)(ii), 80.46(a)(3)(iii), 80.46(a)(3)(iv)) in gasoline. ASTM test method D5453 is also alternative test method for measuring sulfur (§ 80.580(c)(2)) in diesel fuel at the 500 ppm sulfur standard, as well as ASTM test method D4294. ASTM test method D6667 is currently the designated test method for measuring sulfur (§ 80.46 (a)(2)) in butane. ASTM test methods D4468 and D3246 are currently alternative test methods for measuring the sulfur (§ 80.46(a)(4)(i), 80.46(a)(4)(ii)) content in butane. ASTM D1319 is currently the designated test method for measuring olefins (§ 80.46(b)) in gasoline and aromatics (§ 80.2(z)) in diesel fuel and is also allowed as an alternative test method for measuring aromatics (§ 80.46(f)(3)) in gasoline. ASTM D6550 is currently an alternative test method for measuring olefins (§ 80.46(b)(2)(i)) in gasoline. ASTM test method D5599 is currently the designated test method for measuring oxygenates (§ 80.46(g)(1)) in gasoline. ASTM test method D4815 is currently an alternative test method for measuring oxygenates (§ 80.46(g)(2)) in gasoline. ASTM test method D5769 is currently the designated test method for measuring aromatics (§ 80.46(f)(1)) in gasoline. ASTM test method D3606 is currently the designated test method for measuring benzene (§ 80.46(e)) in gasoline. ASTM test method D86 is currently the designated test method for measuring the distillation (§ 80.46(d)) of gasoline. ASTM test method D5191 is currently the designated test method for measuring the RVP (§ 80.46(c)) of gasoline. ASTM test method D976 is currently the designated test method for measuring the Cetane Index (§ 80.2(w)) of diesel fuel. ASTM standard practice D4057 is currently the manual sampling standard practice for petroleum and petroleum products (§ 80.8(a)). ASTM standard practice D4177 is currently the automatic sampling standard practice for petroleum and petroleum products (§ 80.8(b)). ASTM standard practice D5842 is currently the RVP sampling standard practice for fuels (§ 80.8(c)). ASTM standard practice D5854 is currently the composite sampling standard practice for petroleum and petroleum products (§ 80.8(a)).

Table VI–2 lists the designated analytical test methods and alternative analytical test methods for RFG, CG and diesel fuel that we are proposing to update in today's action. The Agency has reviewed these updated ASTM test methods and believes that the revisions contained in them will result in improvements in the utilization of these test methods for the regulated industry. We also believe that our proposal to revise these test methods would not result in significant changes that would cause a user of an older version of the same method to incur increased compliance costs. Moreover, all of the revisions were deemed necessary by ASTM International so that improvements in the test method's procedures would ensure better operation for the user of the test method. Thus, EPA is proposing today to update the regulations for the following ASTM test methods: (1) ASTM D2622–10, the designated test method for measuring sulfur in RFG, CG, and alternative test method for diesel fuel at the 500 ppm sulfur standard; (2) ASTM D3120–08, alternative test method for sulfur in gasoline, ASTM D4294–10, alternative test method for sulfur in diesel fuel at the 500 ppm sulfur standard; (3) ASTM D5453–09, alternative test method for sulfur in gasoline and diesel fuel at the 500 ppm sulfur standard; (4) ASTM D6667–10, designated test method for sulfur in butane; (5) ASTM D4468–85(2006), alternative test method for sulfur in butane; (6) ASTM D3246–11, alternative test method for sulfur in butane; (7) ASTM D1319–10, designated test method for measuring olefins in gasoline and aromatics in diesel fuel, as well as the alternative test method for measuring aromatics in gasoline; (8) ASTM D6550–10, alternative test method for measuring olefin content in gasoline; (9) ASTM D4815–09, alternative test method for measuring oxygenate content in gasoline; (10) ASTM D5599–00(2010), the designated test method for measuring oxygen content in gasoline; (11) ASTM D5769–10, the designated test method for measuring aromatics in gasoline; (12) ASTM D3606–10, the designated test method for measuring benzene in gasoline; (13) ASTM D86–11a, the designated test method for measuring distillation properties of gasoline; (14) ASTM D5191–10b, the designated test method for measuring the RVP of gasoline; (15) ASTM D976–06(2011), the designated test method for measuring the Cetane Index of diesel fuel; (16) ASTM D4057–06(2011), the manual sampling standard practice for petroleum and petroleum products; (17) ASTM D4177–95(2010), the automatic sampling standard practice for petroleum and petroleum products; (18) ASTM D5842–04(2009), the sampling standard practice for RVP of fuels; and (19) ASTM D5854–96(2010), the

composite sampling standard practice for petroleum and petroleum products.

TABLE VI–2—PROPOSED DESIGNATED & ALTERNATIVE ASTM INTERNATIONAL ANALYTICAL TEST METHODS UNDER RFG, CG & DIESEL MOTOR VEHICLE FUEL PROGRAMS

Fuel parameter	ASTM analytical test method
Sulfur (gasoline)	ASTM D2622–10, entitled "Standard Test Method for Sulfur in Petroleum Products by Wavelength Dispersive X-Ray Fluorescence Spectrometry."
Sulfur (500 ppm diesel)	ASTM D2622–10, entitled "Standard Test Method for Sulfur in Petroleum Products by Wavelength Dispersive X-Ray Fluorescence Spectrometry"
Sulfur (gasoline)	ASTM D5453–09, entitled, "Standard Test Method for Determination of Total Sulfur in Light Hydrocarbons, Spark Ignition Engine Fuel, Diesel Engine Fuel, and Engine Oil by Ultraviolet Fluorescence."
Sulfur (500 ppm sulfur diesel)	ASTM D5453–09, entitled, "Standard Test Method for Determination of Total Sulfur in Light Hydrocarbons, Spark Ignition Engine Fuel, Diesel Engine Fuel, and Engine Oil by Ultraviolet Fluorescence."
Sulfur (gasoline)	ASTM D3120–08, entitled, "Standard Test Method for Trace Quantities of Sulfur in Light Petroleum Hydrocarbons by Oxidative Microcoulometry."
Sulfur (500 ppm sulfur diesel)	ASTM D4294–10, entitled, "Standard Test Method for Sulfur in Petroleum Products by Energy Dispersive Xray Fluorescence Spectrometry."
Sulfur (butane)	ASTM D6667–10, entitled, "Standard Test Method for Determination of Total Volatile Sulfur in Gaseous Hydrocarbons and Liquefied Petroleum Gases by Ultraviolet Fluorescence."
Sulfur (butane)	ASTM D4468–85(2006), entitled, "Standard Test Method for Total Sulfur in Gaseous Fuels by Hydrogenolysis and Rateometric Colorimetry."
Sulfur (butane)	ASTM D3246–11, entitled, "Standard Test Method for Sulfur in Petroleum Gas by Oxidative Microcoulometry."
Oxygen content (gasoline)	ASTM D5599–00(2010), entitled, "Standard Test Method for Determination of Oxygenates in Gasoline by Gas Chromatography and Oxygen Selective Flame Ionization Detection."
Oxygen content (gasoline)	ASTM D4815–09, entitled "Standard Test Method for Determination of MTBE, ETBE, TAME, DIPE, tertiary-Amyl Alcohol and C_1 to C_4 Alcohols in Gasoline by Gas Chromatography."
Olefins (gasoline)	ASTM D1319–10, entitled "Standard Test Method for Hydrocarbon Types in Liquid Petroleum Products by Fluorescent Indicator Adsorption."
Olefins (gasoline)	ASTM D6550–10, entitled, "Standard Test Method for the Determination of Olefin Content of Gasolines by Supercritical-Fluid Chromatography."
Aromatics (gasoline and diesel)	ASTM D1319–10, entitled "Standard Test Method for Hydrocarbon Types in Liquid Petroleum Products by Fluorescent Indicator Absorption," for diesel fuel, this method is the designated test method; for gasoline, this method is an alternative test method and if used as an alternative method, its results must be correlated to ASTM D5769.
Aromatics (gasoline)	ASTM D5769–10, entitled, "Standard Test Method for Determination of Benzene, Toluene, and Total Aromatics in Finished Gasolines by Gas Chromatography/Mass Spectrometry."
Benzene (gasoline)	ASTM D3606–10, entitled, "Standard Test Method for Determination of Benzene and Toluene in Finished Motor and Aviation Gasoline by Gas Chromatography."
Distillation (gasoline)	ASTM D86–11a, entitled, "Standard Test Method for Distillation of Petroleum Products at Atmospheric Pressure."
Reid Vapor Pressure (gasoline)	ASTM D5191–10b, entitled, "Standard Test Method for Vapor Pressure of Petroleum Products (Mini-Method)."
Cetane Index (diesel)	ASTM D976–06(2011), entitled, "Standard Test Method for Calculated Cetane Index of Distillate Fuels."
Manual Sampling of Petroleum and Petroleum Products.	ASTM D4057–06(Reapproved 2011), entitled, "Standard Practice for Manual Sampling of Petroleum and Petroleum Products."
Automatic Sampling of Petroleum and Petroleum Products.	ASTM D4177–95(Reapproved 2010), entitled, "Standard Practice for Automatic Sampling of Petroleum and Petroleum Products."
RVP Sampling for Fuels	ASTM D5842–04(Reapproved 2009), entitled, "Standard Practice for Sampling and Handling of Fuels for Volatility Measurement."
Composite Sampling of Petroleum and Petroleum Products.	ASTM D5854–96(Reapproved 2010), entitled, "Standard Practice for Mixing and Handling of Liquid Samples of Petroleum and Petroleum Products."

iv. Amendments Related to Downstream Blending

Today's proposed rule also clarifies the list of products that are not to be included in a refinery's or importer's compliance determination under § 80.1240. Refiners and importers are currently required under § 80.1235(b)(2) to exclude oxygenate added to finished gasoline, RBOB or CBOB downstream of either the refinery that produced the gasoline or the import facility where the gasoline was imported. This conflicts with EPA's intended approach in § 80.1238(b), which allows refiners and importers to include oxygenate blended downstream of a refinery or import facility in their annual average benzene calculation, provided the refiner or importer meets certain requirements. We are proposing changes that would allow refiners and importers to include oxygenate blended downstream of their facility and that would make these related sections consistent.

v. Amendments for Previously Certified Gasoline

For benzene, we would also provide flexibility for refiners and importers by providing an alternative allowing them to directly sample and test each batch of blendstock, and treat the blendstock as the produced batch for blendstock that is blended into previously certified gasoline (PCG). We are proposing to add § 80.1347(a)(6) to reflect this alternative. This practice is already allowed under the Tier 2 sulfur program (at

§ 80.340(a)(2)). Refiners and importers are currently required to test the PCG for benzene before addition of blendstock, test the combined blend of PCG and blendstock for benzene, and calculate the properties of the blendstock by treating the PCG as a negative volume batch and treating the blended product as a positive batch. Due to variability in the benzene test method, the PCG approach can sometimes result in calculated blendstock benzene concentrations that are negative, which is physically impossible. We are proposing to amend the regulations at § 80.1235(a)(6) (and add § 80.1347(a)(6), as mentioned) to allow refiners and importers that blend blendstock into PCG an alternative to directly test the blendstock for benzene. We expect that this would ensure a positive benzene test result. Also, today's proposal would clarify that regardless of the approach used, a negative sulfur or benzene result cannot be reported; rather, any negative result must be rounded to zero. Similarly, no negative annual average result can be reported. We are also proposing to amend the regulations at § 80.1235(a)(5) to clarify that refiners and importers may use either approach for blendstocks that are blended into either conventional gasoline or reformulated gasoline.

Lastly, we are proposing to allow importers who import gasoline into the United States by truck to use the sampling and testing requirements in subpart E for truck importers as an alternative to the sampling and testing requirements in subpart L. EPA provided these alternative requirements in subpart E to eliminate the need to test every truckload of imported conventional gasoline for all complex model parameters, including benzene.[403] Since Subpart L also requires importers to test every truckload of imported gasoline for benzene, EPA believes it is appropriate to allow truck importers of gasoline to use the sampling and testing requirements in subpart E as an alternative. Today's rule proposes to amend the regulations to provide this alternative by adding a new § 80.1349.

vi. Amendments Related to Designation of an Alternative Lab

Refiners have indicated to EPA that significant problems are created when a facility's designated lab is nonoperational and testing cannot be performed at the lab during that time period. We are thus proposing (at § 80.65(f)(5)) that a facility have the ability to designate a back-up or alternative lab for testing during such times. In no case could this alternative lab be used to select the best test result, rather it could only be used on those occasions where operational necessity causes a need for it (e.g., the normal lab is closed, the apparatus for certain test methods are down, or independent lab personnel are not available).

vii. Amendments Related to De Minimis Reporting Changes

We are proposing for the correction of batch volume reports to allow for de minimis changes in reporting compliance that would not require a complete resubmission of compliance reports when a minor discrepancy of a few barrels is uncovered. This allowance for the correction of batch volume reports would apply to reporting for: RFG, anti-dumping, gasoline and diesel sulfur, MSAT2 and the RFS renewable volume obligation (RVO) (for RFS, this would only apply to the volume of fuels produced or exported that result in a RVO for obligated parties). We are proposing a new section 80.10 to define de minimis, for the purpose of this allowance, as no more than 500 gallons or by no more than 1 percent of the true batch volume in gallons, whichever value is less. We request comment on whether or not a different amount would be more appropriate.

viii. Amendments Related to RFS2 Annual Report Date

Currently, the RFS2 final reporting date (last day of February) coincides with the RFG and Anti-dumping compliance deadline, which creates a staffing problem for regulated entities because the regulatory requirements are often handled by the same personnel. It was reported to EPA that this also creates an issue when small discrepancies in gasoline production or import volumes are realized, and can potentially trigger an increased RFS RVO and an ensuing scramble to obtain the necessary Renewable Identification Numbers (RINs) in real time. Delaying the RFS reporting date until after volumetric auditing would address this situation and would have no impact on emissions, air quality or compliance with the standard. As such, we are proposing to change the RFS2 reporting date in § 80.1451 to March 31. EPA is also seeking comment on whether the ability to transfer RINs in EMTS for satisfying RVOs under the previous compliance year should be extended from the last day of February to March 31 as well.

ix. Acceptance of Alternate Test Data Under the Gasoline Deposit Control Program

The ''Top Tier'' deposit control gasoline standards developed by four major automakers are based on the premise that a more robust level of the control of vehicle engine and fuel systems beyond that provided by the EPA deposit control requirements is desirable.[404] Several major gasoline marketers have adopted Top Tier for their gasoline. It is widely accepted that conformance with the Top Tier intake valve deposit (IVD) and fuel injector deposit (FID) control testing requirements is more challenging than complying with the EPA IVD and FID testing requirements. Yet additive packages must still be certified to EPA's less stringent standards on older test procedures. We believe that EPA could accept IVD/FID test data that complies with the Top Tier requirements in place of IVD/FID data that complies with the current EPA testing requirements without jeopardizing the emissions benefits from EPA's deposit control program. We are proposing that test data that complies with the Top Tier IVD performance standards at section 1.3.1 could be used to satisfy EPA's IVD control requirements. We are also proposing that test data that complies with the Top Tier FID performance testing standards at section 1.3.3 could be used to satisfy EPA's FID control requirements. We believe that this allowance would provide significant saving to industry from reduced deposit control testing while maintaining the emissions benefits of EPA's gasoline deposit control program. These changes are being proposed in the regulations at §§ 80.161(b), 80.163(a)(1)(iii), 80.164(a), 80.165, 80.167(a), 80.176, and 80.177.

b. Broader Regulatory Streamlining Through Program Restructuring

The current set of fuel regulations is the result of programs that have been established over the years to reduce emissions from mobile sources. These programs include gasoline volatility (RVP), reformulated gasoline and anti-dumping, sulfur control (which the Tier 3 program proposed today would revise), mobile source air toxics (MSAT1), benzene control (MSAT2), and the renewable fuel standards (RFS). Most of these regulations have been amended numerous times.

[403] 70 FR 74561 (December 15, 2005).

[404] The industry established ''Top Tier'' deposit control standards can be found at *http://www.toptiergas.com/deposit_control.html*. EPA's deposit control requirements are contained in §§ 80.140 through 80.174.

The RFG and anti-dumping regulations in particular contain some of the more burdensome requirements on sampling, testing, and reporting. They also have some of the more stringent restrictions on gasoline use (e.g., restricting where fuel produced can be sold, what it may be commingled with, etc.). EPA used the RFG and anti-dumping rules as the foundation for many aspects of subsequently developed fuel regulatory programs. However, the subsequent rules, considered as a whole, have supplanted most of the RFG and anti-dumping standards. For this reason, we are proposing to streamline the regulations in several places as described above. Initial discussions with fuel industry representatives have indicated that a comprehensive review of the complete set of fuel regulations contained in Parts 79 and 80 (''Registration of Fuels and Fuel Additives'' and ''Regulation of Fuels and Fuel Additives,'' respectively) of the Code of Federal Regulations could lead to further streamlining of the regulations beyond the streamlining provisions proposed today.

EPA expects that streamlining would result in more efficient and less costly compliance determinations for affected parties while maintaining the environmental benefits of the programs. Since such changes could require not just the removal or streamlining of existing provisions but also the replacement of several provisions with new, less onerous ones, we are not proposing such changes today. However, EPA requests comments on potential areas in the fuel regulations that may benefit from such a more comprehensive streamlining effort. For example, it may be possible for the RFG VOC standard to be met if a sufficiently stringent RVP level is attained. Under this scenario, sampling and testing requirements at the refinery would be reduced. Another potential scenario could involve consolidation of some RFG and anti-dumping rules; for example, a single set of rules governing the treatment of downstream ethanol blending and in-use surveys could provide greater efficiency and flexibility regarding fuel distribution.

2. Subpart I Technical Amendments

TABLE VI–3—40 CFR PART 80 SUBPART I (DIESEL FUEL) TECHNICAL AMENDMENTS

Section	Description
80.572(a)	Amended to remove the requirement for 15 ppm highway diesel fuel pump labels beginning November 30, 2014, and to amend the title to reflect that the section includes labeling requirements for dispensers of motor vehicle diesel fuel.
80.584(b)(3)(i)	Amended to correct typographical error (''notc'' to ''not'').

We are proposing to remove the requirement for diesel fuel pump labels for 15 ppm highway diesel fuel. Beginning December 1, 2010, all highway diesel fuel was required to be 15 ppm or less; thus, highway diesel fuel labels are no longer needed to distinguish it from 500 ppm highway diesel fuel. However, we do recognize that it may confuse consumers who are accustomed to seeing the highway diesel fuel pump labels if those labels were to disappear, so we are also requesting comment on the removal of this labeling requirement. Note that if highway diesel fuel pump labels are no longer required by the regulations, retail and wholesale purchaser-consumer facilities would be free to continue labeling to eliminate confusion if they so choose.

3. Performance-Based Measurement Systems (PBMS)

TABLE VI–4—PBMS-RELATED TECHNICAL AMENDMENTS

Section	Description
80.46	Amended to allow for performance-based approaches for measuring gasoline parameters.
80.47	Added to extend the performance-based approach to other parameters besides diesel sulfur.
80.101(i)(1)(i)(A),(i)(3)(i)(C), (i)(3)(ii)(C)	Amended to allow for performance-based approaches for measuring gasoline parameters.
80.330(c)(1), (d)(1), (d)(2)	Amended to allow for performance-based approaches for sampling and testing.
80.370(a)(7)(iv)	Amended to require identification of the test method used to measure the sulfur content of a batch.
80.585(a) and (d)(4)	Amended to state the process for approval of test methods prior to and after adoption of PBMS for all fuel programs.
80.1348	Amended to state the sample retention requirements prior to and after adoption of PBMS for all fuel programs.
80.1354(b)(2)	Amended to require identification of the test method used to measure the benzene concentration of a batch.

Consistent with EPA's performance-based measurement system (PBMS) initiative (as discussed below), today we are proposing a PBMS for those chemical and physical properties of motor vehicle fuels regulated by EPA's motor vehicle fuel programs. Specifically, these are gasoline properties at § 80.46, gasoline sulfur at §§ 80.195 and 80.1603, and diesel fuel properties at § 80.2(z). This PBMS sets forth procedures and criteria by which laboratories making measurements to demonstrate compliance with fuels regulations may qualify alternative analytical test methods to those required in the regulations. It also sets minimum statistical quality control (SQC) requirements, following standard industry practices, by which laboratories must maintain and document the precision and accuracy of analytical methods used in the context of these programs. EPA envisions that the proposed PBMS would provide additional flexibility to the regulated industry in choosing test methods and foster innovation and improvement in the precision and accuracy of the measurement of motor fuel properties while not making any reductions in the emission benefits that result from motor fuel programs. It should also provide cost savings to the regulated industry by providing rapid access to newly-developed test methods with speed and ease of analysis. Some of these newer methods use smaller quantities of consumables and less-expensive instrumentation that are easier to automate, thus reducing both operating costs and environmental impact.

a. Background

Refiners, importers and oxygenate blenders producing RFG, conventional gasoline and diesel fuel are required to test these fuels to determine the levels of various specified parameters. A designated test method is associated with each parameter to be tested (except for sulfur concentration in ultra-low sulfur diesel fuel, which must meet performance-based requirements [405]) in 40 CFR part 80. Table VI–5 lists the parameters/fuels and their corresponding designated test methods that we are proposing to update.

TABLE VI–5—DESIGNATED ANALYTICAL TEST METHODS FOR GASOLINE AND DIESEL FUEL

Fuel parameter	Designated analytical method
Sulfur in gasoline	ASTM D 2622–10
Sulfur in butane	ASTM D 6667–10
500 ppm Sulfur Diesel Fuel	ASTM D 2622–10
Olefins in gasoline	ASTM 1319–10
Reid vapor pressure (RVP) in gasoline.	ASTM D 5191–10b, with the following correlation equation: RVP psi = (0.956 * X) − 0.347 RVP kPa = (0.956 * X) − 2.39 where: X = total measured vapor pressure in psi or kPa.
Distillation in gasoline	ASTM D86–11a
Benzene in gasoline	ASTM D 3606–10, except that instrument parameters shall be adjusted to ensure complete resolution of benzene, ethanol, and methanol peaks.
Aromatics in gasoline	ASTM D 5769–10, except that sample chilling requirements in section 8 of this standard are optional.
Oxygen and oxygenate content in gasoline.	ASTM D 5599–00(2010)
Aromatics in diesel fuel	ASTM D1319–10

In addition to the designated analytic methods for the parameters mentioned above, EPA has specified alternative test methods for some parameters. These alternative test methods may be used in lieu of the corresponding designated test methods, provided that all test results are correlated to the appropriate designated test methods. Alternative test methods have not been established for all regulated motor vehicle fuel parameters, however. Specifically, alternative test methods have been established for measuring the gasoline properties of aromatic content,[406] oxygenate content,[407] olefin content,[408] and sulfur content [409] as well as sulfur in butane.[410] Currently, if a regulated party wishes to use an alternative test method that is not already approved, it must petition the Agency, and EPA must approve the use of this alternative method through a rulemaking process that on average, may take more than a year to complete.

Approving new methods through rulemaking has been identified as a barrier to the use of innovative analytical test methods. In order to address these concerns and similar ones in other media areas, the Agency's Environmental Monitoring Management Council established a workgroup of scientists representing EPA's Headquarters and Regional offices to consider establishing a performance-based approach to specifying analytical testing requirements. On the recommendations of the workgroup, the Agency decided to incorporate the PBMS approach into its programs, to the extent feasible.

EPA's practice, in recent rulemaking activities, of aligning its prescribed methods with those published by Voluntary Consensus-based Standards Bodies (VCSBs) [411] is almost consistent with the PBMS policy and with the National Technology Transfer and Advancement Act (NTTAA).[412] For example, in the nonroad diesel rulemaking, which controlled the sulfur content of diesel fuel,[413] EPA required only that laboratories demonstrate their test methods' ability to meet a set performance criteria rather than prescribing that a single specific method be used. Today's proposal extends the diesel sulfur qualification approach to the chemical/physical properties measured in other motor vehicle fuel programs, with modifications appropriate to accommodate the differences among the fuel parameters.

b. Overview of Proposed Program Requirements

In a June 29, 2004 rulemaking, EPA specified a performance-based approach to measuring diesel sulfur at 15 ppm and 500 ppm and removed the previous requirement of particular designated and alternative methods for 15 ppm diesel sulfur.[414] We decided, in that rulemaking, to offer users two approaches to selecting test methods for diesel sulfur at the 500 ppm level. The first of these was to use either the designated test method or specific alternative test methods.[415] The second option was to meet performance based requirements similar to those adopted for 15 ppm diesel sulfur.[416] We are proposing today to extend the performance-based approach to method selection and qualification to other parameters besides diesel sulfur, with modifications appropriate to accommodate the differences among the fuel parameters.

Specifically, we are proposing requirements that laboratories would be required to demonstrate the

[405] See §§ 80.580, 80.584 and 80.585.

[406] ASTM D 1319–03$^{\varepsilon 1}$ (see § 80.46(f)(3)).

[407] ASTM D 4815–04 (see § 80.46(g)(2)).

[408] ASTM D 6550–05 (see § 80.46(b)(2)(i)).

[409] ASTM methods D 5453–08a, D 6920–07, D 3120–06$^{\varepsilon 1}$, and D 7039–07 (see §§ 80.46(a)(3)(i) through 80.46(a)(3)(iv)).

[410] ASTM D 4468–85 (reapproved 2000) and ASTM D 3246–96 (see §§ 80.46(a)(4)(i) and 80.46(a)(4)(ii)).

[411] ASTM International (ASTM) is one such organization.

[412] Public Law 104–113, 104th Congress, March 7, 1996, H.R. 2196.

[413] 69 FR 38958, June 29, 2004. This rulemaking used standard materials with known chemical composition to evaluate the accuracy of candidate test methods.

[414] See §§ 80.584 and 80.545.

[415] See § 80.580(c)(2).

[416] See §§ 80.584(a)(2), 80.584(b)(2)(i) through 80.584(b)(2)(iii), and 80.585.

precision [417] and accuracy [418] of chosen fuel parameter measurement methods. Once implemented, this proposal would: (1) Require individual laboratories to demonstrate adequate measurement quality, (2) allow laboratories to choose methods that meet their own needs, provided they can meet prescribed criteria rather than specific methods,[419] and (3) require all laboratories making regulatory measurements to establish and maintain a statistical quality control program. EPA intends that the measurement system resulting from this proposal would make no compromises on precision or accuracy relative to the system that exists under current regulations. We intend to incorporate the standards and practices of Voluntary Consensus Standards Body (VCSB) organizations wherever feasible.

Today's PBMS approach applies to the qualification of analytical test instrumentation and methods used to measure various characteristics of individual fuel samples. It does not apply to sampling methods or in-line blending methods. While in-line blending certainly includes the use of analytical measurements, it is broader in scope than this proposal. Including in-line blending methodologies in this proposed rulemaking would raise issues that could not be adequately addressed in the context of this proposed rulemaking. Furthermore, in-line blending already has a certification process, as specified in regulations at § 80.65(f), that sets forth qualification criteria that take into account the unique combinations of sampling, control, and analysis that are involved with in-line blending. However, we seek comment on potentially expanding our PBMS to include sampling or in-line blending methods.

c. How can we establish the accuracy of the measurement system (all qualified methods/installations) for each parameter?

We are proposing to group the gasoline and diesel fuel parameters that must be measured (e.g., aromatics, sulfur, etc.), into two categories. These categories depend on whether it is feasible to construct and use gravimetric standards [420] for defining the parameter and thus determining the accuracy of a measurement method. For some parameters it is difficult or perhaps impossible to make gravimetric standards. This is particularly true where the parameter is actually a class of chemical compounds (themselves containing multiple chemical compounds) that may have a very large number of members (e.g., aromatics in gasoline). Use of gravimetric standards for establishing accuracy may also be hindered if many of the potential measurement methods are sensitive to the chemical composition of the material that the analyte is added (often called the ''matrix'') and are thus prone to being ''confused'' into giving inaccurate answers. Where these two problems are not present, the use of gravimetric standards is the ideal way to establish the accuracy of the analytical test method. We will describe these as ''absolute'' parameters. The accuracy qualification test for a method measuring such parameters should center upon its being able to get the ''right'' answer for one or more gravimetric standards.

To establish the accuracy of methods measuring each parameter where gravimetric standards hindered, we are proposing to retain an EPA-prescribed reference method or ''designated method'' that would, in effect, define the parameter as ''parameter X is, for federal regulatory purposes, whatever method Z measures.'' Parameters that require such treatment will be described as ''method-defined'' parameters. Establishing the accuracy of a method intended to measure such a parameter would be accomplished by relating its measurements on a particular set of test fuels to measurements made on the same fuels by a laboratory operating the designated method. This approach is often referred to as correlating the new method with the designated method. In other words, measurements from the new method (the ''candidate'' for qualification) would be used to predict the measurements that the designated method would get on the same fuels (with, perhaps, some offset or adjustment equation applied) and then these predictions would be compared with the actual measurements made from those fuels by the designated method. If the predictions are consistently close to the designated method measurements and evenly distributed above and below these reference values, then the laboratory and the method it proposes to use would have a good case for qualification with regard to accuracy. Such a correlative approach to qualification is dependent for its workability upon the test fuels used to establish the correlation. Such fuels must be sufficiently varied along all important dimensions so that day-to-day production laboratory operations are very unlikely to turn up some unusual fuels (or a new class of fuels produced, say, by some new refining process) for which the correlation equation derived earlier is not accurate and where the predictions of the designated method's results are quite erratic and inaccurate.

In addition to the dependence of the method-defined approach upon the choice of fuels for establishing the correlation to the designated method, this approach also greatly elevates the importance of the designated method that is used. An increasingly obsolete designated method might need to be changed for practical reasons, but adoption of a new designated method could bring about a de facto change in the standard for the parameter in the absence of a prescribed correction equation designed to align the new designated method with the old. While the gravimetric approach to measurement has its own problems, it is free of the difficulties associated with any particular method.

Our classification of parameters into the absolute or method-defined categories is not entirely straightforward. Of the parameters subject to this proposal, only those with sulfur as the analyte fall into the absolute category. Sulfur is a single element rather than a compound (or, worse, a class of compounds with numerous members) and thus lends itself to the construction of gravimetric standards. The methods that are currently used to measure sulfur in gasoline and diesel fuel have been subject to intensive recent development work and are largely free of matrix effects. Sulfur in butane is even more

[417] Precision—the amount of consistency in a set of measurements performed on the same material. ASTM repeatability and reproducibility are examples of measures of precision. ASTM Repeatability (''r'')—the difference between successive test results obtained by the same operator with the same apparatus under constant operating conditions on identical test material. ASTM Reproducibility (''R'')—the difference between two single and independent test results obtained by different operators working in different laboratories on identical test material using the same method.

[418] Accuracy—the closeness of a single measurement to its true value of what is being measured.

[419] For some parameters the criteria will be based on the laboratory's chosen method's ability to closely predict the measurements made by EPA's chosen or ''designated'' method. This approach is made necessary by the ''method-dependent'' definition of some of the parameters to be measured.

[420] Gravimetric standards are test materials made by adding a carefully weighed (hence ''gravimetric'') quantity of the analyte of interest to a measured quantity of another substance known not to contain any of the analyte. The result is a solution with a very accurately known concentration of the analyte. The accuracy of gravimetric standard reference materials can be closely controlled and is not dependent on an analytical test method.

amenable to the absolute approach, since butane is a single compound rather than a constantly varying mixture of many compounds. We also note, as mentioned before, that the diesel sulfur rule used the absolute approach. For these reasons we are proposing to treat gasoline sulfur and sulfur in butane as absolute parameters.

Beyond these two sulfur parameters, classification becomes more difficult. Where the analyte is a class of compounds, like aromatics, the construction of a gravimetric standard would have to be done by use of an agreed-upon conventional recipe that includes some group of the compounds in the class in proportions that approximate to what is found in the actual fuels that a method will measure. If the class has relatively few compounds and they are all available in reasonably pure form, then they could all be included in the standard, leaving only the issues of their respective concentrations (likely to vary among real fuels) and the question of ''matrix effects'' as discussed above. Where the class of compounds has many members and not all could be included in an artificially constructed standard, we are left with the question of which ones can be omitted on grounds that they are likely to occur only in very small concentrations and/or are not particularly important in emission formation. The result of these exclusions, for certain parameters, would likely be a directional bias toward underestimating the prevalence of the target class of compounds. The likely size of the bias will vary among parameters and among fuels on which measurements are made. Use of a complex recipe for such standards, where possible, may minimize the bias, but may add to the costs and difficulty of formulating a standard representative of all fuels.

The distillation parameters (T50 and T90) seem to be largely resistant to a gravimetric approach that relies on pure compounds instead of the smooth curve that results from simple distillation of complex mixtures like gasoline and diesel fuel. Such gravimetric standards, incorporating only a very limited number of compounds out of practical necessity, would be likely to yield a kind of stair-step curve.

Given these logical and practical difficulties with using a gravimetric approach to qualifying methods for parameters other than sulfur, EPA is today proposing that the method-defined or correlative approach be used for all parameters other than sulfur. We are especially interested in receiving comment on our categorization of fuel parameters as either absolute or method defined.

d. How would analytic methods be evaluated for qualification?

i. General provisions: To which methods and which parties do the proposed requirements apply?

As discussed above, EPA believes that the interests of measurement quality are best served by evaluating most method installations for qualification at the level of individual laboratories instead of individual instruments. This approach was used in regulating diesel sulfur. We are proposing to require laboratories to qualify all methods that will be used to make measurements for regulatory purposes. EPA does not believe that a relatively simple qualification test will ensure continued measurement quality, but rather that this will greatly reduce the likelihood of a laboratory undertaking important measurements without some assurance that the instrument is in working order, that at least one operator[421] in the laboratory understands the method for its use, and that it can be made to perform to meet acceptable criteria. We seek comment on requiring laboratories to qualify all methods used to take measurements for regulatory purposes.

ii. How would laboratories demonstrate the precision and accuracy of methods for measuring ''absolute'' parameters and thus qualify the methods for use?

We are proposing to require a separate qualification for test methods used to measure gasoline sulfur. As mentioned previously, the Agency has successfully implemented performance based requirements for sulfur in diesel fuel. The test methods typically used for gasoline sulfur (one of the two parameters we are proposing to consider absolute, as discussed above) are also frequently used for diesel sulfur and the ASTM test method designations for both are the same. However, examination of test method descriptions points toward substantial differences in how the test methods are used in the different matrices. One example is a requirement for recalibration when matrices shift. While we considered the possibility of allowing the diesel sulfur qualifications to be used also for gasoline sulfur, we believe the differences between a diesel fuel matrix and gasoline fuel matrix may be too great to permit such a sweeping exemption from qualification requirements. The process of reworking the test methods to measure gasoline sulfur will, in many cases, generate most of the data needed for qualification, and thus will not represent a major additional effort. So, despite the fact that ASTM test methods are the same for gasoline and diesel, we are proposing to require separate qualification for test methods used in measuring gasoline sulfur.

Operational Description. We are proposing to require applications for qualification to include a complete operational description of the test method in question. A VCSB publication would satisfy this requirement for methods published by such organizations as ASTM. The description must include the scope of the test method, a summary, discussion of any interferences that are expected, apparatus needed, reagents, sampling and specimen preparation, calibration, test method procedure, calculations, and any test method-specific quality control.

Precision Qualification. We are proposing requirements for precision qualification that are similar to requirements set forth in the nonroad diesel sulfur rule. That rule imposed a maximum value for the standard deviation[422] of a series of at least 20 measurements over at least 20 days on a single fuel under site precision conditions. Specifically, the diesel rule used 1.5 times the repeatability standard deviation (ASTM ''r''/2.77) of what was the least precise of the then-allowed methods. The factor of 1.5, expands the allowable variability from that of back-to-back tests (as in ASTM's definition of repeatability) to account for the sources of greater variability that find their way into a longer series of tests on the same material. In the qualification process for ultra-low sulfur diesel testing, the factor of 1.5 proved to be neither so tight that most laboratories were unable to meet it, nor so loose as to not be challenging at all. Thus we consider it to be reasonable on its face, as well as having proven to be workable in practice, and we have therefore retained it in this proposal. We request comments on the selection of a test method's repeatability to use as the basis of the qualification.

Gasoline Sulfur Criterion. We are proposing to use the ASTM repeatability

[421] The intent behind the qualification process is to demonstrate the facility's capability with the method. Accordingly we are not proposing that each instrument used to implement a particular method be required to qualify (some labs may have several instruments implementing a single method) or that each operator be so required. We recommend, but are not proposing to require, that a laboratory rotate operators during the testing required for qualification, thereby both improving and testing the skills of all operators for a given method and strengthening its quality program.

[422] Where the standard deviation is estimated from a sample of the population (formula uses ''N–1'' in the denominator).

standard deviation factor as discussed above from ASTM D7039–07 to set the precision criteria for gasoline sulfur. We note that there is a designated test method and four alternative test methods for gasoline sulfur. The larger repeatability among the test methods currently allowed for sulfur in gasoline is for ASTM D6920–07. This was obtained only when the substantially more variable of the two instrument models included in a small inter-laboratory study was included. Since the most variable instrument model had a repeatability of nearly twice that of the other test methods and over four times that of the other instrument model for the same method, we believe that ASTM D6920–07 should be represented, for this purpose, by the instrument model yielding the better performance of the two. Given that decision, ASTM D7039–07 is left with the largest repeatability of these test methods. And we are proposing to use its repeatability (1.76 ppm at 10 ppm) to set the precision criterion for this parameter. Thus the maximum allowable standard deviation of the twenty test results on a 10 ppm gasoline would be 0.95 ppm.[423] Since we do not propose to prescribe the parameter level for the fuel used for these precision tests, this maximum limit will vary depending upon the repeatability number that the ASTM D7039–07 test method's repeatability formula yields, given the parameter value of the test fuel chosen. If a laboratory selected a 5 ppm fuel to test instead of a 10 ppm fuel, the maximum limit for the standard deviation would be 0.67 ppm.

Sulfur in Butane Precision Criteria. There are three test methods currently allowed for measuring the sulfur content of butane for blending into gasoline. A new designated test method was adopted for this parameter (ASTM D6667–10)[424] because the previous primary test method, D3246–11, had become somewhat obsolete. Given that D3246–11 is no longer widely available,[425] though still an allowed alternative test method, and that the range of D4468–85 (reapproved 2006) extends only to 20 ppm, we are proposing a precision criterion based on the repeatability of D6667–10. This test method's repeatability at the 10 ppm level is 1.15 ppm, so the calculations used above with gasoline sulfur yield an upper limit for the standard deviation of the 20 tests for sulfur in butane of 0.62 ppm.

Temporal Distribution of Precision Tests. With regard to spacing of the 20 precision tests, we are proposing 7 or fewer tests per week and 2 or fewer tests per day. We believe this would prevent weekend testing while also precluding practices such as conducting one test on the first day and 19 tests on the 20th day. We believe that adequate spacing of testing is necessary if we are to have a meaningful standard for the longer-term stability of a particular test method in a particular laboratory installation. We are also taking comments on the following two options: (1) a requirement that 23 or more hours must elapse between tests (this option requires either testing on weekends or an extension of the 20 days); and (2) tests arranged into no fewer than five batches of five or fewer tests each, with only one such batch allowed per day.

Accuracy Qualification. We are proposing accuracy criteria for absolute fuel parameters that are similar to the criteria for sulfur in diesel fuel. Applicants for qualification would be required to select two commercially available gravimetric standard reference materials and then to show that their laboratory and method are capable of getting an average of ten consecutive results that are very close to the Accepted Reference Value or ARV for each. How close to the ARV these averages must be is the stringency part, and we propose to use 0.75 times the precision criterion described above, which is the same value as the diesel rules. In the case of gasoline sulfur, for a gravimetric standard with ARV = 10 ppm, this would be 0.75 times 0.95 ppm or 0.71 ppm. The corresponding numbers for sulfur in butane at the 10 ppm level would be 0.75 times 1.15 or 0.47 ppm. We are proposing that for other parameter that might come to fall into the absolute category, the precision and accuracy criteria would be determined as a function of the ASTM repeatability of one of the methods (selected by EPA) available for measuring that parameter.[426]

iii. How would laboratories demonstrate the precision and accuracy of methods for measuring ''Method-Defined'' parameters and qualify the methods for use?

Operational Description. For method-defined parameters we are proposing the same operational description as that for absolute parameters. The operational description of a proposed test method must be very complete. We consider publication of a test method by a VCSB organization such as ASTM to meet this criterion. For non-VCSB test methods this description must meet very high standards for completeness and clarity. Since non-VCSB test methods have not been fully vetted by a VCSB, a non-VCSB test method would require additional information. In particular, the underlying scientific measurement principles must be thoroughly explained and the apparatus described well enough that a trained outsider could successfully implement the non-VCSB test method and replicate the applicant's results.

Precision Qualification Specifics. We are proposing the same precision qualification criteria as absolute parameters. For those method-defined parameters with alternative test methods that have been identified by regulations, preference will be given to the least precise of the allowed test methods. For reference installations we propose the additional requirements that the instrument must be shown to be in statistical control, as provided for in ASTM D6299–10^{e1} (and the SQC procedures to be discussed below); and that the applicant must submit control charts showing a record of in-control operation for at least five months. While these requirements would likely result in a delay between instrument setup and the ability to qualify it as a reference installation, we believe that the delay is necessary to demonstrate the stability of these critically important installations. Considering the number of long-established installations of these designated test methods, EPA expects no lack of laboratories capable of meeting these standards and able to provide this service commercially to any party interested in qualifying a new installation of an alternative test method for a method-defined parameter. Table VI–6 sets out our proposed precision criteria for the various method-defined fuel parameters with no alternative test method.

Olefins in Gasoline Criterion. The designated method for this parameter, ASTM D 1319–10, is also the less

[423] This number was determined by using the repeatability equation for ''r'' from ASTM D7039–07 for a 10 ppm sulfur gasoline to get 1.76 ppm, dividing the ''r'' in ppm by 2.77 to obtain the underlying standard deviation of 1.39 ppm, and multiplying the result by 1.5 (criterion used in diesel sulfur rule) to get 0.95 ppm.

[424] 71 FR 16492 (April 3, 2006).

[425] See EPA–HQ–OAR–2005–0048–0002.

[426] It is important to understand that the numerical examples presented in the text are entirely hypothetical, since use of precision testing material or gravimetric standards at levels other than those used in the examples would change all of the numbers. Use of a gasoline sulfur gravimetric standard at 5 ppm (instead of the 10 ppm used in the example) would require computing the repeatability of the method at 5 ppm using the equation given in the method description, dividing it by 2.77, multiplying the result by 1.5, and then multiplying that result by 0.75. As a short-cut, the accuracy criterion could be determined by multiplying the ASTM repeatability of the method at the level in question by 0.4061.

precise of the two methods currently allowed. As such, its repeatability statistics are proposed as the basis for precision qualification. Thus for a test fuel with olefins at, say, 9 volume percent, the repeatability is 0.972, and the underlying standard deviation is 0.972/2.77 = 0.351, and the precision criterion is 1.5 times that, or 0.53 volume percent. A laboratory's standard deviation for the 20 tests could not exceed that value and still qualify for precision.

Aromatics in Gasoline Criterion. We are proposing to use the repeatability standard deviation for D1319–10 to set the precision criteria for aromatics in gasoline. (e.g., 1.3 volume percent for a fuel with 32 volume percent aromatics). The cut off point for the 20-test standard deviation using the test fuel would then be 0.70 volume percent. We note that D5769–10 is the current designated test method but that D1319–10 is still widely used. We also note that while not as precise as D5769–10, D1319–10 is the designated method for olefins, and has precision sufficiently close to that of the more modern designated method to make it still viable.

Oxygen and Oxygenates in Gasoline Criterion. The two test methods allowed for oxygen are very close together in precision, at least for total oxygen content. The designated method, D5599–00(2010) is slightly less precise, leading us to propose that its repeatability be used to determine the criterion. So for a test gasoline with 3 mass percent total oxygen, the repeatability would be 0.083 mass percent and the criterion for precision in this example comes out to 0.045 mass percent.

TABLE VI–6—METHOD-DEFINED PRECISION CRITERION FOR FUEL PARAMETERS WITH NO ALTERNATIVES TO THE DESIGNATED TEST METHOD

Fuel Parameter	Example of fuel parameter level for demonstrating precision	Proposed precision criterion [427]
RVP in gasoline	RVP sample of gasoline equals 6.8 psi	0.11 psi.
Distillation in gasoline	Gasoline sample with initial boiling point (IBP) of 20 °C and 90 percent evaporated (E90) temperature of 110 °C.	IBP = 1.54 °C. E10 = 0.72 °C. E50 = 0.40 °C. E90 = 0.97 °C. FBP = 1.80 °C.
Benzene in gasoline	Gasoline sample containing 1 volume percent benzene.	0.02 volume percent benzene.
Aromatics in diesel fuel	Diesel sample containing 35 volume percent aromatics.	0.70 volume percent.

Accuracy Qualification. Test methods used to measure method-defined parameters can be grouped into three types: reference installations of designated methods intended for use in qualifying alternative methods; designated method installations intended for ordinary production measurements; and non-designated methods. Since these reference installations will be used to evaluate the accuracy of other test methods and to evaluate whether the need for the establishment of a correlation equation. We are proposing that such reference instruments must be shown to be near the middle of the distribution of the industry monthly inter-laboratory crosscheck program for at least five months prior to application.[428] We are proposing that laboratories would specifically compute the difference between either the instrument's average measurement of the fuel closest to the applicable standards or to the average value for the fuel type in the complex model and the robust mean for that fuel obtained by all of the non-outlier labs in the program. We are proposing that the differences would then be standardized by expressing it in robust standard deviation units. This standardized inter-laboratory cross check (ILCC) differences would be put into a moving average with a span of, for example, five months. We are also proposing to set the standard such that the instrument's moving average would be within the central 50 percent of the distribution of participating designated method labs. Because a robust standard deviation is used by the ILCC program, this percentage will have to be approximate. Such lab-specific qualification would be outside of the normal qualification of a lab for making regulatory measurements for certifying fuel and would pertain only to use of the instrument in certifying other methods. EPA requests comment on the nature and stringency of this proposed requirement. Specifically, we request comment as to whether this is a reasonable requirement that is likely to be met by instruments in the best qualified laboratories. Could the ''middle 50 percent'' requirement be further tightened without severely restricting the supply of potential reference installations? Are there computationally simpler ways to accomplish the general purpose of this requirement?

(1) Role of Voluntary Consensus Bodies in Qualifying Alternative Analytical Test Methods

In February 1996, Section 12(d) of Public Law 104–113, Congress passed the National Technology Transfer and Advancement Act of 1995'' (NTTAA), in order to establish the policies of the existing OMB Circular A–119 in law.[429] The purposes of Section 12(d) of Public Law 104–113 are: (1) To direct ''federal agencies to focus upon increasing their use of [voluntary consensus] standards [430] whenever possible,'' thus reducing federal procurement and operating costs; and (2) to authorize the National Institute of Standards and Technology (NIST) as the ''federal coordinator for government entities responsible for the development of technical standards and conformity assessment activities,'' thus eliminating ''unnecessary duplication of conformity

[427] Where maximum allowable standard deviation (SD) of 20 tests is less than or equal to 1.5 times the repeatability (r) of the designated test method divided by 2.77 (SD of 20 tests ≤ 1.5 X (r/2.77)).

[428] An alternative to this measure can be to use the D6299–10^{e1} calculations. This would require statistical quality control (SQC) so that the instrument would have an acceptable quality of performance. This could reduce the burden of calculations and align this requirement better with the NTTAA.

[429] See 142 Cong. Rec. H1264–1267 (daily ed. February 27, 1996) (statement Rep. Morella); 142 Cong. Rec. S1078–1082 (daily ed. February 7, 1996) (statement Cong. Rockefeller); 141 Cong. Rec. H14333–34 (daily ed. December 12, 1995) (statements of Reps. Brown and Morella).

[430] This use of the word ''standards'' refers to test methods, calibration materials, etc.

assessment activities.'' [431] Section 21(d) of Public Law 104–113 also gives agencies the discretion to use other standards in lieu of voluntary consensus standards where use of the latter would be ''inconsistent with applicable law or otherwise impractical.'' However, in such cases, the head of an agency or department must send to OMB, through NIST, ''an explanation of the reasons for using such standards.''

The final revision of Circular A–119 defines Voluntary Consensus Standards as ''standards developed or adopted by voluntary consensus bodies, both domestic and international'', and defines VCSB as ''domestic or international organizations which plan, develop, establish, or coordinate voluntary consensus standards using agreed-upon procedures and which possess the attributes of openness, balance of interest, due process, an appeals process, and consensus.'' Finally, Circular A–119 indicates that consensus means ''general agreement, but not necessarily unanimity, and includes a process for attempting to resolve objections by interested parties, as long as all comments have been fairly considered, each objector is advised of the disposition of his or her objection(s) and the reasons why, and the consensus body members are given an opportunity to change their votes after reviewing the comments.'' [432]

The Agency believes that VCSBs can play a valuable role in developing statistical tools for analytical test methodology description and evaluation, developing and describing new analytical test methodologies and organizing test programs to evaluate methodologies and assist laboratories to maintain quality measurement systems.

EPA has frequently selected VCSB-developed methods as its designated methods for fuels programs. However, it has only adopted a particular version of each such method by incorporating it by reference in the **Federal Register**. In each case the Agency was endorsing and adopting test methods that were completely known and available for examination, rather than the unknown result of some future VCSB action. To simply say that any method approved by a VCSB is acceptable for all purposes, including compliance demonstrations would seem to invite such difficulties as: (1) multiple methods for a parameter, developed by different VCSB's and not correlated adequately with each other, or (2) methods that change over time (by publication of new versions, for example) in such a way that the definition of what is being measured changes and no longer corresponds to what was used in setting compliance to the environmental standard(s).

(2) Use of Reference Materials in Qualifying and Maintaining Alternative Analytical Techniques

Depending on the qualification process chosen by the Agency, discussed in more detail below, the protocol proposed here for the qualification and maintenance of alternative test methods stops short of automatic acceptance of VCSB decisions and methods, but goes as far in that direction as we believe is consistent with the Agency's mission of ensuring compliance with motor vehicle fuel programs. It gives some preference to VCSB-approved methods because of our greater confidence that such methods have been positively evaluated by a broad user community rather than by a narrower array of users. We are proposing today to also make substantial use of VCSB-developed statistical protocols for comparing methods and for use by particular laboratories in keeping analytic methods under adequate statistical quality control.

We consider Reference materials to be samples of the type of material to be tested (gasoline or diesel fuel in this case) that are known or thought to have a particular concentration of the substance to be measured. Laboratories may use these materials to calibrate and evaluate the performance of measurement systems. EPA is proposing the following three types of reference materials that would be used in establishing and maintaining the accuracy of both designated and alternative analytical test methods: (1) Gravimetric standards, (2) consensus-named fuels (gasoline or diesel fuel), and (3) locally-named standards.

Additionally, some combinations of parameters and test methods limit the availability of some kinds of reference materials. This complicates the task of developing a methodology for qualifying alternative test methods. EPA recognizes the technical complexity and the likelihood that new analytical testing methods may emerge. Therefore, the Agency is also proposing to offer substantial flexibility in the choice of standard reference materials and the manner of their use, so long as they ensure accuracy and preserve the integrity of applicable fuel standards.

Gravimetric Reference Standards. Gravimetric standards are test materials made by adding a carefully measured quantity of the analyte of interest to a measured quantity of another substance known not to contain any of the analyte. The result is a solution with a very accurately known concentration of the analyte. The accuracy of gravimetric standard reference materials can be closely controlled and is not dependent on an analytical test method. They do present certain practical problems in use. First, gravimetric reference materials cannot be made for all of the parameters under the RFG, CG and diesel fuel programs (e.g., distillation points and olefins). Second, there are ''matrix effects.'' As earlier explained, matrix effects are where components in real-world gasoline or diesel fuel other than the analyte of interest confuse the instrument and cause it to measure the analyte differently than it would when measuring the same concentration of the analyte in a gravimetric standard built in a matrix where the instrument is not sensitive. Matrix effects are problematic for certain analytical methods, whose underlying scientific operating principles make the analytical method unable to utilize gravimetric standards for calibration when other types of materials (gasoline or diesel fuel) will have to be measured accurately. The approach taken in this proposal, where the gravimetric standard reference materials would be used in establishing the accuracy of a reference implementation of the designated method, is an approach that should minimize matrix effect problems. This is because the designated methods were selected, among other criteria, for their relative freedom from matrix effects. Thus, EPA believes that such materials, offer the best tools for establishing the accuracy of analytical test methods. When feasible, EPA believes that gravimetric reference standard materials should form the basis for establishing accuracy through correlation with designated analytical test methods calibrated with gravimetric standards.

Consensus-named Fuels. These are homogeneous quantities of fuel that have been analyzed by a number of different laboratories (by sending around small samples). The average concentration of some parameter of interest across all of the different laboratories is then used as the ''consensus name'' for that material.

There are certain parameters that the Agency does not believe that gravimetric standard reference materials can be prepared. Aromatics are a class of numerous compounds that are produced by refinery processes in a mixture that is most likely impossible to duplicate in the laboratory with any consistency for all fuel because not all

[431] See Cong. Rec. H1262 (daily ed. February 27, 1996) (statements of Rep. Morella).

[432] 63 FR 8546 (February 19, 1998).

refiners have the same configuration. For such parameters, it is therefore necessary to use consensus-named gasolines to control accuracy because they are the only reliable type of standard reference material that is available. The use of consensus-named gasolines may minimize matrix-related effects where they are used to establish the accuracy of different designated method implementations, though they may be less useful in evaluating alternative methods that have been adapted to measure a certain fuel matrix, but not sensitive enough to measure all fuel matrices the test method may encounter in use, otherwise known as ''adaptive learning'' technologies. The nominal concentrations in consensus-named gasolines can only be as accurate as the designated analytical test method used in the VCSB round robin study that named them. Consensus-named gasolines will also be costly and time-consuming to produce and will need to be periodically replaced (i.e., when the supply is exhausted or the shelf life expires) through either a new round robin study or some approach using overlapped testing of the old standard reference material with a new batch (which will not, of course, have exactly the same concentration of analytes).

Locally Named Reference Materials. These materials are also sometimes referred to as quality control samples (e.g., octane testing reference fuel). These are gasoline or diesel fuels that usually come from the regular production of the facility. These reference materials are used in laboratory quality control efforts and have been analyzed using the designated method (either by the facility's lab or by a referee lab) to obtain an estimate of their concentration. The fuels are then stored carefully by the lab to slow their deterioration. The advantage to these is that since a refinery may already have such fuels on site for octane or cetane testing purposes, these materials may be relatively inexpensive. Another advantage is that, since a refiner would produce these fuels at the same site where the alternative method will be qualified, their use should minimize any difficulties associated with matrix effects. These locally named reference fuels are not as accurate as the VCSB round robin process and are not assured by gravimetric standard reference material construction. Thus, a refiner could only use them for relating an alternative method to a carefully calibrated installation of the designated method whose accuracy has been established and controlled by other means.

We request comment on the appropriateness of using the three types of standard reference materials for accuracy that have been discussed and on their applicability in the qualification process and statistical quality control process of analytical test methods.

(3) Qualification Criteria of Alternative Analytical Test Methods

We are also proposing two options for refiners that wish to qualify an alternative test method as discussed in further detail in Sections VI.A.3.g.i and VI.A.3.g.ii of this proposal. For both of the proposed options the candidate test method must have precision at least equal to that of the designated analytical test method (though not defined in precisely the same way). And the alternative test method must be capable of correlation with the designated test method for the parameter such that the refiner may use the alternative test method results to produce predicted designated test method results that it can subsequently use in demonstrating compliance with the applicable fuel composition or performance standards.

(4) Statistical Quality Control Program

An important element of today's proposed approach for the qualification of alternative analytical test methods is the description of a statistical quality control (SQC) program that may be applied to any analytical test method used in the regulatory programs covered by this proposal. We are proposing to require a SQC program as described below. EPA's objective with statistical quality control is not to impose a complete new system of quality control measures, but rather to adopt a subset of SQC procedures that are already widely in use. We anticipate that the measures we have selected would not require the generation of much additional data by the laboratories that elect to employ them and that the SQC program would improve the quality of measurement among those labs that adopt such measures.

e. Qualification Criteria for Designated Method Installations Used To Qualify Method-Defined Parameter Instruments

Designated test method installations that will be used to qualify method-defined parameter instruments are reference installations. Since reference installations will be used to evaluate the accuracy of other alternative test methods and to establish correlation equations, EPA believes that these reference installations should be held to higher standards.

First, we are proposing that reference instruments meet precision qualification requirements that are similar to the criteria set forth in the nonroad diesel sulfur rule. As explained earlier, that rule imposed a maximum value for the standard deviation [433] of a series of at least 20 measurements over at least 20 days on a single fuel under site precision conditions. Specifically, the diesel rule used 1.5 times the repeatability standard deviation (ASTM ''r''/2.77) of what was the least precise of the then-allowed methods. For those ''method-defined'' parameters from Table VI–1 above that do not currently have alternatives test methods the precision criteria is based on the fuel parameter's designated test method. In each case the precision criterion is determined by (''r''/2.77) X 1.5 where ''r'' is the ASTM repeatability determined for the particular fuel that is being used for the purpose of demonstrating the test method's precision.

Second, we are proposing that such reference instruments must be shown to be near the middle of the distribution of the industry monthly inter-laboratory crosscheck (ILCC) program for at least the five months prior to application.[434] We are also proposing that laboratories would specifically compute the difference between the instrument's average measurement of the fuel closest to the applicable standards (or to the average value for the fuel type in the complex model) and the robust mean for that fuel obtained by all of the non-outlier labs in the program. And then standardize this difference by expressing it in robust standard deviation units. These standardized inter-laboratory cross check differences would be put into a moving average with a span of, for example, five months. We are proposing to set the standard such that the instrument's moving average would be within the central 50 percent of the distribution of participating designated method labs. Because a robust standard deviation is used by the ILCC program, this percentage will have to be approximate. Such lab-specific qualification would be outside of the normal qualification of a lab for making regulatory measurements

[433] Where the standard deviation is estimated from a sample of the population (formula uses ''N–1'' in the denominator).

[434] An alternative to this measure can be to use the ASTM D6299–10^{e1} calculations. This would require SQC so that the instrument would have an acceptable quality of performance. This could reduce the burden of calculations and align this requirement better with the NTTAA.

for certifying fuel and would pertain only to use of the instrument in certifying other methods. In essence, these designated method installations will serve as surrogates for the gravimetric standards that cannot be used in qualifying alternative methods for method-defined parameters.

Finally, for reference installations we propose that the reference instrument must be shown to be in statistical control, as provided for in ASTM D6299–10^{e1} (and the SQC procedures to be discussed below); and that the applicant must maintain control charts showing a record of in-control operation for at least five months. While these requirements would likely impose a delay between instrument setup and the ability to qualify it as a reference installation, we believe that the delay is necessary to demonstrate the stability of these critically important installations. Considering the number of long-established installations of these designated methods, EPA expects no lack of facilities capable of meeting these standards and able to provide this service commercially to any party interested in qualifying a new installation for a method-defined parameter.

f. Qualification Criteria for Designated Test Method Installations That Are ''Method-Defined'' Parameters Instruments and Not Used To Qualify Other ''Method-Defined'' Methods

Refiners, importers and oxygenate blenders producing gasoline and diesel fuel are required to test these fuels to determine the levels of various specified parameters. A designated test method is associated with each parameter to be tested (except for sulfur concentration in ultra-low sulfur diesel fuel, which must meet performance-based requirements[435]) in 40 CFR Part 80. Table VI–5 of this preamble lists the fuel parameters and their corresponding designated test methods.

We are proposing today that installations of designated methods must maintain records they meet statistical quality control requirements as detailed below in this preamble. Requiring all installations of all methods, including existing designated method installations, to implement statistical quality control, as we are proposing today, would likely suffice to homogenize and improve measurement quality in these already-stable and standardized methods.

[435] See §§ 80.580, 80.584 and 80.585.

g. Qualification Criteria for Method Defined Parameter Instruments Other Than Designated Test Methods

As discussed above, the Agency is also proposing to have two options for refiners to qualify an alternative test method that is a method-defined fuel parameter. The first option would allow for qualifying methods that have been sponsored and published by a VCSB, such as ASTM (the VCSB approach). The second way involves qualification for a laboratory that has developed its own analytical test method but has decided not to offer it for evaluation and establishment through a VCSB-based organizational process (the non-VCSB approach). Both options require the candidate method to have precision at least equal to that of the designated analytical test method (though not defined in precisely the same way). The alternative method must also be capable of close correlation with the designated method for the parameter such that the refiner may use the alternative method results to produce predicted designated method results that it can subsequently use in demonstrating compliance with the applicable fuel composition or performance standards. The proposed criteria for both the VCSB and non-VCSB approaches to qualify method-defined instruments are discussed in further detail below.

i. Qualification Criteria for VCSB Method-Defined Parameter Test Methods

The first of these approaches to qualifying alternative methods applies only to methods that have been sponsored and published by a VCSB, such as ASTM. We are proposing that the VCSB must have fully described the analytical test method, so that it is replicable in different laboratories and understood by any technician. We would consider publication of a method by a VCSB organization such as ASTM to meet this criterion. The VCSB must have tested the candidate method in a round robin program against the designated method, must have published a determination that the method meets the criteria specified in the discussion below, and must have published the information necessary to correlate the alternative method to the designated method.[436]

We are also proposing that an alternative analytical test method need not be qualified separately in each laboratory that adopts it. This is because by the time such a test method has been through the extensive development process typically required by a VCSB, the method's procedures would have been exhaustively described. At this point there will be little uncertainty about how the analytical test method is to be applied, and it will have been implemented in a variety of different laboratories and used on a variety of different types of fuels. Therefore the VCSB-based process gives EPA some confidence that the analytical test method is likely to be stable in use and can be implemented with very little ambiguity regarding instrumentation, materials, and procedures. Moreover, VCSB method evaluation protocols have been established; including a protocol for comparing methods provide means for establishing a proposed VCSB alternative method's precision parity with the designated method for the parameter and for determining whether the alternative method can be adequately correlated with the designated method.[437] EPA is also proposing that VCSB method-defined test methods utilize ASTM D6708 to determine if a correlation equation is necessary.

[436] This first approach assumes that a single such equation can be used for all labs using the method, an assumption that may not always hold. The more detailed discussion of the two approaches that follows this introduction explores this problem.

ii. Qualification Criteria for Non-VCSB Method-Defined Parameter Test Methods

The second way a candidate alternative method may qualify does not involve the process by which a VCSB evaluates and officially establish methods through publication. EPA is proposing that a candidate method that follows the non-VCSB-based route for qualification must be qualified independently by each analytical laboratory that wishes to adopt the method. This is because such a method has not been shown to be capable of accurately measuring the parameter in different laboratories and across a variety of fuel matrices.

The following is a discussion of the qualification criteria for non-VCSB method-defined parameter test methods. First, the Agency proposes to require a complete operational description of the non-VCSB test method, as described above in Section VI.A.3.d.ii and VI.A.3.d.iii of this preamble. The operational description must be thorough enough that a person lacking expertise in the operation of the test instrument would be able to replicate its results.

[437] ASTM D 6708–08, entitled, Standard Practice for Statistical Assessment and Improvement of Expected Agreement Between Two Test Methods that Purport to Measure the Same Property of a Material.

Second, the Agency proposes that the candidate non-VCSB test method be tested on a range of fuels [438] and by a qualified reference installation of the applicable designated test method.

Third, the Agency proposes that the specific laboratory using the candidate non-VCSB test method must statistically establish through application of ASTM D6708–08 that the candidate method measures the same aspect of samples as the applicable designated test method.

Fourth, the Agency is proposing to disqualify non-VCSB test methods with important sample-specific biases (matrix effects) that cannot be considered as random as determined by ASTM D6708–08. It is possible a situation may arise where a non-VCSB test method suspected by the applicant of being highly matrix-sensitive may be qualified on a narrowly circumscribed range of fuels (which must meet the D6708–08 statistical variability criteria). In this situation, the types of fuels on which qualification was achieved and for which the method is to be approved must be specified in the method description. Fuels outside of this scope would have to be analyzed for regulatory purposes by some other method that was not this limited. The Agency believes that any restriction on the scope of fuels for which the method is to be qualified must be accompanied by a discussion of how the applicant plans to screen samples for conformity to the scope.

Fifth, the Agency proposes that precision qualification be conducted in the form of cross-method reproducibility [439] of the candidate and applicable designated test method, where the cross-method reproducibility must be equal to or less than 70 percent of the published reproducibility of the applicable designated test method.

The Agency believes, that when ASTM D6708–08 is used in this manner (without joint round robin data) the cross-method reproducibility (Rcm) output by the program is not really a reproducibility in the usual sense, but rather indicates the expected value with uncertainty of the differences between the designated method and qualification candidate method. We believe that when used this way, Rcm from ASTM D6708–08 is more analogous to a site precision than to an inter-laboratory reproducibility.

As described, this measure can reasonably be expected to fall between the published reproducibility (R) and repeatability (r) of the designated test method. Because qualified alternative test methods should be able to generally do as well as the designated test method Rcm be less than or equal to ''R''. Since ''R'' is typically established when the test method is first developed, and laboratory experience with it is limited, the real reproducibility for a method long in service is likely to be smaller than ''R.'' Moreover, as mentioned above, Rcm is more like a site precision number, for a well-run installation, that must be smaller than ''R'' since the systematic component of the differences between the instruments has been adjusted out and the ''within-method-interlaboratory'' component of variance is not present. On the other end of the space between ''r'' and ''R,'' the published repeatability has far fewer sources of variability than any other measure of its kind, suggesting that the cut-point should be closer to ''R'' than to ''r''. The proposed 70 percent fraction of published reproducibility was selected because there is some evidence to suggest that site precisions for various methods/parameters tend to average around that fraction of the same method's published reproducibility. We are also requesting comment on the appropriate percentage of ''R'' that the ''cross-method reproducibility'' should be equal to or less than.

Sixth, the Agency proposes that the applicant demonstrate, through the use of ASTM D6708–08, whether a correlation to the designated test method is necessary. ASTM D6708–08 can also be used to determine whether the candidate method's results are null compared to the designated test method and thus needs no adjustment or correlation, or whether some correction or correlation equation is required so the candidate method may predict designated method results. We are proposing the use of ASTM 6708–08 for corrections, if it is determined through the use of ASTM D6708–08 that the candidate method requires such a correction to predict designated test method results. The Agency proposes that the correction would be applied to the candidate instruments output to obtain measurements results for regulatory purposes.

Finally, we are proposing to require that applicants for non-VCSB test methods secure an independent third party oversight and audit review of the data generated and used to qualify non-VCSB test methods. We are proposing that the independent third party would provide an overall assessment of the analytical technique and methodology and discuss any limitations in the scope of the method, as well as attest that all the requirements for non-VCSB test method qualification have been satisfied. The Agency believes this requirement would provide additional assurance that a non-VCSB test method is found to be adequate in use for compliance.

We seek comments on all aspects of today's proposal. Additionally, the Agency is particularly interested in comments on the appropriateness of the qualification criteria for candidate method-defined parameter non-VCSB test methods.

h. Statistical quality control: How can we ensure that test methods continue to deliver quality measurement in practice?

As discussed previously, an important element of today's proposal is a statistical quality control program that may be applied to any analytical test method used in the regulatory programs covered by this proposal. Today, the Agency is proposing that every laboratory using test instruments to measure fuel parameters must implement and maintain a basic SQC program in order to satisfy EPA's reporting or recordkeeping requirements. We are proposing that every laboratory have a separate SQC program for each instrument used to make measurements for reporting or recordkeeping purposes.[440] This is unlike the qualification criteria requirements, where only one of a set of essentially identical instruments implementing the same method in a laboratory must qualify.

We are proposing that implementation of a SQC program by a laboratory would be a defense in any subsequent enforcement actions where the measurements are in use. We are proposing to adopt a subset of SQC procedures that are already widely in use from ASTM D6299–10^{e1}. We anticipate that the measures we are

[438] Fuels, either consensus named fuels or locally named reference materials, used must be typical of those to be analyzed by the facility in practice and must meet the data requirements (variability, etc.) of ASTM D6708–08.

[439] Cross-method reproducibility is a quantitative expression of the random error associated with the difference between two results obtained by different operators using different apparatus and applying the two methods X and Y, respectively, each obtaining a single result on a identical test sample, when the methods have been assessed and an appropriate bias-correction has been applied. It is defined as the 95 percent confidence limit for the difference between two such single and independent results.

[440] Such SQC programs are already an established part of VCSB protocols for analytical laboratory operation (as indicated by such practices as ASTM's D6299–10^{e1}) and are likely to be part of most laboratories ''standard operating procedures.'' Thus, such a requirement very likely adds little or nothing in the way of burden for most laboratories. Laboratories that lack such programs and would have to expend significant effort to create them are those most at risk for poor measurements and for which the effort is most easily justified.

proposing would not require the generation of much additional data by the laboratory that employs them and that the SQC program would improve the quality of measurement among those labs that adopt such measures. These SQC procedures used by laboratories would ensure that the test methods they have qualified and the instruments on which the methods are run are yielding results with appropriate accuracy and precision, e.g., that the results from a particular instrument does not ''drift'' over time to yield unacceptable values. The proposed minimum specific SQC requirements for laboratories that measures absolute parameters, and both VCSB and non-VCSB methods used to measure method-defined parameters, are discussed in further detail below.

i. Statistical Quality Control for Absolute Parameters

We are proposing precision and accuracy SQC requirements for each instrument used to measure absolute parameters in the laboratory. We are proposing that every instrument would test a quality control (''QC'') material [441] either of: once per 20 production tests or once per week and maintain both an ''I'' chart [442] and an ''MR'' chart.[443] We are proposing that any violations of the control limit(s) would be investigated by laboratory personnel, corrective action taken as required, and records kept of the incident for a period of 5 years. We are also proposing to follow the procedures of ASTM D6299–10^{e1} for making transition from one batch of QC material to another. We are a also proposing the use of Annex A1.9, entitled ''Q-Procedure,'' of ASTM D6299–10^{e1} for validating new QC material. We are proposing that when QC material is soon-to-be-depleted, that a new batch of QC material is prepared and its value compared to the old QC material on a chart. The new batch of QC material would be tested concurrently with the soon-to-be-depleted old QC material. The results would be plotted from the ''old'' and ''new'' QC materials on its respective chart, and if no special-cause signals are noted, then the result for the new material would be considered valid.[444]

We are proposing to require that every instrument tests a commercially available gravimetric standard reference material (SRM) (''check standard'' as defined in ASTM D6299–10^{e1}) on a quarterly basis. The absolute difference between the mean of multiple back-to-back tests of the SRM and ARV of the SRM greater than 0.75 times the published reproducibility of the test method must be investigated by laboratory personnel, appropriate action taken, and records kept of the incident and investigation. We are proposing that records of the SRM measurements and investigations into any exceedances of these proposed criteria must be kept for a period of 5 years. Additionally, we are proposing to require laboratories to pre-treat and assess results from the check standard testing after at least 15 testing occasions,[445] construct ''MR'' and ''I'' charts [446] with control lines, and maintain control charts, logging, investigating, and correcting the underlying causes of any control limit violations as discussed in ASTM D6299–10^{e1}. We are proposing that records of such incidents and the underlying control charts must be kept by the facility for a period of 5 years.

ii. Statistical Quality Control for VCSB-Approved Methods Used To Measure Method-Defined Parameters

We are proposing precision and accuracy SQC requirements for every instrument used in VCSB-approved methods to measure method-defined parameters in the laboratory. With regard to precision, we are proposing the same SQC for instruments used for absolute parameters. We are proposing that every instrument test a quality control QC material [447] once every 20 production tests or once per week whichever is more frequent. We are also proposing the maintenance of an ''I'' chart [448] and a ''MR'' chart.[449] We are proposing that violations of the control limit(s) in these charts would be investigated, corrective action taken as required, and records kept of the incident for a period of 5 years. We are also proposing that laboratories follow the procedures of ASTM D6299–10^{e1} for making the transition from one batch of QC material to the next.

With regard to accuracy we are proposing that each laboratory perform a check standard [450] for each instrument as defined in ASTM D6299–10^{e1} for each instrument on a quarterly basis. We propose that check standards for ''method-defined'' parameters must be ordinary fuels with levels of the parameter of interest close to either regulatory standards or to the average level of use. We also propose that ARVs of such standards must be determined through consensus methods [451] on designated method instruments. The absolute difference between the mean of multiple back-to-back tests of the SRM and ARV of the SRM greater than 0.75 times the published reproducibility of the test method must be investigated, appropriate action taken by laboratory personnel, and records kept of the incident and investigation. We are proposing that records of the SRM measurements and investigations into any exceedance of the criteria must be kept for a period of 5 years. Additionally, we are proposing that laboratories must pre-treat and assess results from the check standard testing after at least 15 testing occasions,[452] construct ''MR'' and ''I'' charts [453] with control lines, and maintain control charts, logging, investigating, and correcting the underlying causes of any control limit violations as discussed in ASTM D6299–10^{e1}. We are proposing that records of such incidents and the underlying control charts must be kept by the laboratory for a period of 5 years.

[441] See ASTM D6299–10^{e1}, paragraph 3.2.3 for a definition and Section 6 for guidance, selection, construction, handling, storage and use of reference material samples.

[442] See ASTM D6299–10^{e1}, section 7 and Section A1.5.1 for chart construction and usage, including criteria for deciding upon corrective action.

[443] See ASTM D6299–10^{e1}, Section A1.5.2 for chart construction and usage. Any exceedance of the control limit should be investigated.

[444] See ASTM D6299–10^{e1}, Annex A1.9 Q-Procedure. Procedures differ depending whether an I-chart, MR chart, EWMA chart, Q-chart or a combination of these charts are utilized by the laboratory.

[445] See ASTM D6299–10^{e1}, Section 8.2 (pretreatment) and Section 8.4 (assessment). Procedures differ depending upon whether a single check standard is used for multiple testing occasions or multiple check standards must be used.

[446] See ASTM D6299–10^{e1}, Section 8.4 and appropriate Annex sections for chart construction and guidance.

[447] See ASTM D6299–10^{e1}, paragraph 3.2.3 for a definition and Section 6 for guidance, selection, construction, handling, storage and use of reference material samples.

[448] See ASTM D6299–10^{e1}, section 7 and Section A1.5.1 for chart construction and usage, including criteria for deciding upon corrective action.

[449] See ASTM D6299–10^{e1}, Section A1.5.2 for chart construction and usage. Any exceedance of the control limit should be investigated.

[450] As defined in ASTM D6299–10^{e1}, Section 3,2,3, and further discussed in Section 6.2. Optimum use of materials that are consensus-named by a number of laboratories may be possible only if these materials are distributed in sufficient quantity that they may be used as check standards after their consensus-determined ARV is known by all laboratories. As mentioned in the text, only measurements made on the designated method for the parameter in question may be used in determining the ARV for this purpose.

[451] Following the guidelines of ASTM D6299–10^{e1}, Section 6.2.2.

[452] See ASTM D6299–10^{e1}, Section 8.2 (pretreatment) and Section 8.4 (assessment). Procedures differ depending upon whether a single check standard is used for multiple testing occasions or multiple check standards must be used.

[453] See ASTM D6299–10^{e1}, Section 8.4 and appropriate Annex sections for chart construction and guidance.

iii. Statistical Quality Control for Non-VCSB Methods Used To Measure Method-Defined Parameters

We are also proposing precision and accuracy SQC requirements for instruments used in non-VCSB methods to measure method-defined parameters in the laboratory. We are proposing precision requirements for instruments used in these types of test methods that are the same as those proposed for absolute parameters. We are proposing that every instrument be tested on a quality control ''QC'' material [454] once per 20 production tests or once per week, whichever is more frequent. We are also proposing the maintenance of an ''I'' chart [455] and a ''MR'' chart.[456] We are proposing that violations of the control limit(s) in these charts should be investigated, corrective action taken as required, and that records of the incident must be kept for a period of 5 years. We are proposing that laboratories follow the procedures of ASTM D6299–10^{e1} for transitioning from one batch of QC material to the next.

The proposed accuracy requirement depends on whether the method-defined parameter test method has minimal matrix interferences or whether the method-defined parameter test method is highly sensitive to matrix composition. The Agency believes that non-VCSB test methods are expected to vary considerably to the extent that their results are sensitive to fuel characteristics other than the level of the analyte of interest. For methods judged by their operators to be relatively insensitive to such matrix effects, EPA believes that the same SQC accuracy approach used with VCSB-approved methods measuring ''method-defined'' parameters is appropriate. Where this is the case, a statement to this effect must be included in the application for qualification. Any decision to abandon this approach to SQC accuracy must be reported to EPA along with the data and reasoning that led to the conclusion.

For non-VCSB methods used to measure method-defined parameters that are highly sensitive to matrix composition, we are proposing the same accuracy requirements that must be maintained as for other methods for method-defined parameters, except that the check standards will consist of production fuels, representative of those production fuels routinely analyzed by the laboratory, that have been submitted to a reference installation of the designated test method. We are proposing that the designated test method measurements should be replicated and the average of these results used as the ARV for the check standard. Additionally, we are proposing that the laboratory operating the alternative method is responsible for the qualification status and current stability of the reference method installation (for example, documentation on the identity of the reference installation and its control status must be maintained on the premises of the laboratory that is using the alternative test method).

Also for non-VCSB methods, the Agency is proposing external checks on the accuracy of matrix-sensitive methods. Laboratories that have qualified such a method would be required to send a sample of each 20th production batch of gasoline or diesel fuel to EPA's Ann Arbor laboratory, along with the lab's measurement results using the alternative method (the result used to certify the batch). The EPA lab may return such a sample on a blind basis for a required reanalysis by the originating laboratory at any time up to two months from EPA's receipt of the sample. This external control is an additional check on both the site precision of the alternative method and its accuracy. We request comments on all aspects of our proposal.

i. Agency Approval Options

We are proposing to require qualification of only non-VCSB test methods for fuel parameters. We are also seeking comment on whether we should require qualification of all test methods for fuel parameters. We are also proposing a requirement for regulated parties to identify the test method used for each compliance measurement as part of the applicable record keeping and reporting. The following section contains a discussion of our proposal.

We believe that the proposed approach to performance-based qualification of test methods goes considerably beyond the minimum requirements of the NTTAA in providing flexibility of method choice, and accomplish performance-based qualification without compromising measurement quality. We also believe that the primary tools for achieving the latter objective are lab-specific qualification of method installations and a requirement for across-the-board SQC. While EPA would benefit from finalizing today's proposal by no longer having to evaluate new alternative measurement methodologies, this benefit is not likely to offset the substantial and unpredictable resource costs involved in administering a qualification process and providing infrastructural support for laboratories' SQC programs.

i. Agency Approval of Only Non-VCSB Methods

We are proposing that only non-VCSB test methods for fuel parameters would need to be qualified. We are proposing to exclude designated test methods that have been in operation 6 months prior to finalizing this rule, as discussed below, as well as test methods that are developed by VCSBs, like ASTM International or the International Organization for Standards (ISO). A laboratory that has developed a test method but has decided not to offer it for evaluation and establishment through a VCSB-based organizational process would be required to qualify the test methods using the process discussed earlier.[457] We are proposing that such test methods must be qualified independently by each analytical laboratory that wishes to adopt the test method. This is because such a test method has not been shown to be capable of accurately measuring the parameter in different laboratories and across a variety of fuel matrices. The precision for the candidate analytical test method must be established by a medium-term series of measurements on production fuels, the workability of the test method must be verified by at least one other laboratory, and its accuracy must be demonstrated by direct correlation to the designated analytical test method for the particular fuel parameter.

We are proposing the following requirements for test methods that have been sponsored and published by a VCSB such as ASTM or ISO. The test method must be fully described so that it is replicable in many different laboratories and so that its operation may be understood by a technician. The VCSB must have tested the candidate test method in a round robin program against the designated test method, must have published a determination that the

[454] See ASTM D6299–10^{e1}, paragraph 3.2.3 for a definition and Section 6.1 for guidance, selection, construction, handling, storage and use of quality control samples.

[455] See ASTM D6299–10^{e1}, section 7 and Section A1.5.1 for chart construction and usage, including criteria for deciding upon corrective action.

[456] See ASTM D6299–10^{e1}, Section A1.5.2 for chart construction and usage. Any exceedance of the control limit should be investigated.

[457] Reasons for not submitting a local method for VCSB evaluation may include the proprietary nature of software or apparatus or the fact that the method is highly matrix-sensitive and not likely to perform consistently when used to analyze fuels with widely varying properties. EPA recognizes that matrix sensitivities may be subtle and methods with such characteristics may have been sponsored and published by VCSB's.

test method meets the performance criteria as discussed, and must have published the information necessary to correlate the alternative test method to the designated test method.[458]

We are proposing a system of self-qualification for VCSB-based alternative test methods. Thus, we are also proposing that a VCSB-based candidate alternative test method need not be qualified separately in each laboratory that adopts it. This is because by the time a VCSB-based candidate alternative test method has been through the extensive development process typically required by a VCSB, the test method's procedures will have been exhaustively described. At this point there will be little uncertainty about how the analytical test method is to be applied, and it will have been implemented in a variety of different laboratories and used on a variety of different types of fuels. Therefore, the VCSB-based process gives EPA some confidence that the analytical test method is likely to be stable in use and can be implemented with very little ambiguity regarding instrumentation, materials, and procedures.

VCSB method evaluation protocols have been established, including a recently developed protocol for comparing methods, which provide means for establishing a proposed VCSB alternative method's precision parity with the designated method for the parameter[459] and for determining whether the alternative test method can be adequately correlated with the designated test method.[460]

We also recognize that imposing this qualification requirement on existing test methods developed by a VCSB without adequate lead time may be problematic. We are thus proposing to give methods published and in operation when this proposal is published a grace period of one year from the effective date of a final rule before they meet these proposed requirements.

We are also proposing to exempt existing (i.e., in use for six months prior to publication of this proposal) installations of designated test methods that are method-defined parameters from the qualification requirement. We presume these to be stable and capable methods in relatively experienced hands. Because they are already being used to certify fuels, requiring their qualification could be disruptive and burdensome to both their operators and to whoever manages the qualification process. Such installations would not benefit tangibly from this rule (as by obtaining access to a desired new method), but would nevertheless bear a newly-imposed burden.

We are also proposing to require record keeping and retention requirements for both VCSB alternative and non-VCSB test methods. Parties would need to maintain qualification records for demonstrating compliance for a period of 5 years after they cease use of the particular test method. Parties must also maintain a complete description of the test method and data with statistical analysis that supports its qualification.

We are also seeking comment on whether the Agency should require qualification of all analytical test methods for the fuel parameters at 40 CFR 80. This would include each designated test method, all alternative test methods currently allowed by our regulations, as well as any other analytical test method regardless of whether the test method was developed by a voluntary consensus standards based organization, like ASTM, or if it is a proprietary analytical test method, that is, non-VCSB test method.

We recognize that imposing the qualification requirement on existing and operational installations of all methods without adequate lead time may be problematic. We are thus proposing to give such laboratories (i.e., those in operation when this proposal is published) a grace period of one year from the effective date of the final rule before they must have qualified if they wish to continue in operation. We believe that a year should be enough time to determine whether an existing test method is likely to qualify or to adopt and qualify a replacement test method if it should fall short. New installations of previously accepted methods, including alternatives, would be required to qualify their laboratory before being put into service just like all other installations of new test methods in a laboratory.

4. Downstream Pentane Blending

The current regulations at 40 CFR 80.82 reduce the burden of compliance with EPA gasoline quality requirements for parties that blend butane into conventional gasoline, reformulated gasoline (RFG), or reformulated blendstock for oxygenate blending (RBOB) downstream of a crude oil refinery. Parties that conduct such butane blending are considered a refiner, however, they are not subject to sampling testing requirements that would otherwise apply to a refiner provided they use butane of known quality and meet certain other requirements. Butane blending is not allowed into RFG or RBOB from April 1 through September 30 or into any RFG or RBOB that is designated as VOC-controlled. Butane blenders must test to ensure that the volatility requirements of the final gasoline blend are met. Testing to demonstrate compliance with other gasoline compositional requirements is not required provided that the blender has documents from the supplier demonstrating the butane is ''commercial grade.'' Commercial grade butane is currently defined as butane for which test results demonstrate that it is 95 percent pure and has the following properties: sulfur <= 30 ppm, benzene <= 0.03 volume percent, olefins <= 1.0 volume percent, and aromatics <= 2.0 volume percent. Documents from the supplier demonstrating the butane is ''non-commercial grade'' may also be used to demonstrate compliance with gasoline quality requirements other than volatility provided the blender conducts a quality assurance program on the butane they blend. Non-commercial grade butane is currently defined as follows: sulfur <= 30 ppm, benzene <= 0.03 volume percent, olefins <= 10.0 volume percent, and aromatics <= 2.0 volume percent. Today's action is proposing to amend these butane specifications to replace the current 30 ppm sulfur cap with a 10 ppm cap consistent with today's proposed 10 ppm refinery average sulfur standard.

Butane blenders stated that broadening the downstream butane blending provisions to include pentane would help to increase the domestic supply of gasoline by providing a market for the pentane fraction of natural gasoline liquids. A substantial increase in the production of natural gasoline liquids is occurring as a by-product of increased domestic natural gas and crude oil production in the U.S. Given the lower volatility of pentane compared to butane, a greater volume of such domestically-available feedstocks could be blended into gasoline downstream of the refinery while still maintaining the gasoline quality specifications including RVP. We request comment on whether the provisions for butane blending might also be applied to pentane blending,

[458] This first approach assumes that a single such equation can be used for all labs using the method, an assumption that may not always hold. The more detailed discussion of the two approaches that follows this introduction explores this problem.

[459] ASTM D 6708–08, entitled, Standard Practice for Statistical Assessment and Improvement of Expected Agreement Between Two Test Methods that Purport to Measure the Same Property of a Material.

[460] ASTM D 6708–08, entitled, Standard Practice for Statistical Assessment and Improvement of Expected Agreement Between Two Test Methods that Purport to Measure the Same Property of a Material.

including the specifications for the fuel qualities noted above. Specific comment is requested on the potential vehicle emissions and operability effects from such pentane blending. To the extent that pentane blending might displace butane blending, there may be some decrease in evaporative emissions due to pentane's lower boiling point compared to butane. Therefore, we anticipate that allowing downstream blending of pentane would have a neutral or marginally beneficial effect on vehicle emissions. If we were to extend the downstream butane blending provisions to pentane, we also seek comment on whether any additional pentane quality specifications or blending requirements would be necessary to protect vehicle emissions and operability performance.

B. Engine, Vehicle and Equipment Programs

We are proposing several technical amendments to existing regulatory requirements for motor vehicles and other types of vehicles and engines. These changes are intended to align with the Tier 3 standards proposed in this rule and to make various adjustments and corrections to the regulations. We are also proposing to remove large portions of obsolete regulatory text and update cross references accordingly. We request comment on all these amendments. However, we are not requesting comment on the underlying regulatory requirements except as specifically described in this section.

1. Fuel Economy Labeling

EPA adopted updated fuel economy labeling requirements in 40 CFR part 600 on July 6, 2011.[461] The label displays a smog rating based on relative emission rates for certified vehicles. With new Tier 3 standards, this rating scale becomes less useful, since the Tier 3 standards would disallow certification to half of the existing smog ratings. We are therefore proposing a new smog rating scale starting in model year 2018. Manufacturers choosing to transition to the Tier 3 NMOG+NO_X standards based on a percentage phase-in could continue to meet Tier 2 standards for the ''phase-out'' fraction of the fleet through model year 2020, but would use a new smog rating scale that lines up, to the extent possible, the Tier 2 standards with the new Tier 3 scale. We believe it is appropriate to shift to the new scale in model year 2018 to reflect the start of Tier 3 program for the majority of vehicles.

The smog rating scale ranges from 1 to 10. The federal Tier 3 program comprises seven different NMOG+NO_X emission certification levels. In addition, the California ZEV program for 2018 and later model years includes a unique TZEV category, which falls between a ZEV (Bin 0) and a SULEV20 (Bin 20), resulting in a total of eight emission standards.[462] We propose to omit rankings 2 and 4, ranking the eight emission levels in order over the remaining ratings. Omitting ratings 2 and 4 helps convey the larger absolute differences in the g/mile standards between Bins 70 and 125 and Bins 125 and 160.

We also propose to adjust the scale again in model year 2025 so that, consistent with the fuel economy and greenhouse gas rating, the middle of the scale (a smog rating of 5 or 6) is equivalent to the fleet average standard of 0.030 g/mile for NMOG+NO_X. Using this approach, we would apply a smog rating of 8 for TZEVs and omit 9 from the smog ratings. We request comment on applying smog ratings to TZEV vehicles; in particular, we request comment on any appropriate differentiation of TZEV vehicles, such as assigning different smog ratings based on the particular SULEV exhaust emission standards or the allowance value for different all-electric range values.

We request comment on these and other alternative approaches to revising the specifications for the smog rating on the fuel economy label. We also request comment on whether one or more transition rating scales would be appropriate to gradually adjust the smog rating scale as the fleet average standards become more stringent.

2. Removing Obsolete Regulatory Text

EPA regulations for highway and nonroad engines, vehicles, and equipment in many cases apply for a range of model years before being replaced by a new set of standards, requirements, and other provisions for implementing a program that changes to reflect technological innovation, changing environmental needs, new business dynamics, and other factors.

We are proposing to take steps in this rulemaking to remove substantial portions of regulatory text that no longer have any regulatory significance, generally because they have been superseded by newer provisions. In many cases, this simply involves removing paragraphs or sections related to certifying products that no longer apply to 2004 or newer model years. In other cases, we can remove whole subparts that apply only to engines and vehicles that have reached the end of their useful lives for the purpose of regulation. For example, the in-use regulations from 40 CFR part 86, subpart H, applied only for 1993 through 2003 model year light-duty vehicles, light-duty trucks, and medium-duty passenger vehicles. Also, the National LEV standards in 40 CFR part 86, subpart R (and in Appendix XIII through XVIII of part 86), applied only for 1999 through 2003 model years. These subparts, and references to that content, can be removed from the CFR.

Similarly, the provisions of 40 CFR part 86, subpart A, applied to light-duty vehicles only through model year 2000 for light-duty vehicles and model year 2004 for light-duty trucks and chassis-certified heavy-duty vehicles. Much of that subpart continues to apply for heavy-duty engines, so the obsolete portions must be removed more selectively. The proposal includes removal of substantial portions of 40 CFR part 86, subpart A, to omit text that applies only for light-duty vehicles or light-duty trucks, and additional portions that do not apply for any 2004 or newer model years.

There are also instances where we are proposing to streamline the organization of regulatory sections in 40 CFR part 86. For those places where there is a new section for a given model year where all the old provisions continue to apply, and the new section introduces a narrow additional provision, we are proposing to copy the new paragraph into the section for the older model-year provisions, with descriptive language in place to say when the new provision applies. This consolidation would allow us to take out numerous sections that can lead to confusion for the reader.

The following sections describe additional changes to remove material.

a. Certification Short Test and I/M Provisions

Inspection and maintenance (I/M) programs have been implemented by state and local governments for many years. These programs have been effective at identifying vehicles that need some kind of repair to restore vehicles' emission control systems. In that context, they have also provided useful information to facilitate warranty coverage where defective components or systems were still covered by the manufacturer's warranty, as required by section 207 of the Clean Air Act. In 1993, EPA adopted a requirement for

[461] 76 FR 39478 (July 6, 2011).

[462] *http://www.arb.ca.gov/regact/2012/zev2012/fro2rev.pdf.*

the certification short test (''CST'' or ''cert short test'').[463] The purpose of the cert short test was to correlate the vehicle manufacturer's certification and I/M testing. Under this approach, the vehicle manufacturer certifies that a properly maintained and operated vehicle will pass I/M testing. When such a vehicle fails I/M during the warranty period, the manufacturer is responsible for the cost of repairs necessary to correct the problem so the vehicle can pass the I/M test.

EPA adopted requirements in 1993 for manufacturers to design and build their vehicles with OBD, which provides performance feedback for evaluating whether emission control systems are functioning properly. This rule, combined with fleet turnover, has resulted in vehicles subject to I/M being equipped with OBD. The standard protocol for I/M programs now depends on the OBD system instead of tailpipe tests to determine which vehicles need maintenance. Since vehicle manufacturers have to certify the performance of OBD systems as part of the certification process, the use of OBD for I/M testing also provides a basis for determining that emission repairs are covered by the manufacturer's warranty, when necessary. For many years, manufacturers have submitted a compliance statement for certification instead of submitting data to demonstrate that they meet the standards associated with the cert short test. Since emission measurements are no longer part of any standardized I/M testing, it has become clear that OBD systems have completely replaced the cert short test as the means of making warranty determinations for I/M testing. We are therefore proposing in this rule to entirely remove the cert short test standards and test procedures from 40 CFR part 86, subparts O and S, and to similarly remove the emission measurement procedures from 40 CFR part 85, subpart W.

The remaining regulatory text in 40 CFR part 85, subpart W, relates only to the role of OBD testing in the determination of manufacturers' warranty obligations resulting from I/M testing. In addition to removing material that no longer applies based on model years, we are proposing to update this remaining text in two ways. First, we are expanding the scope to include medium-duty passenger vehicles since these vehicles are now subject to both OBD certification requirements and I/M testing. Second, we are replacing all citations to SAE reference procedures with a cross-reference to 40 CFR 86.1806, where we already specify all the relevant OBD reference procedures. This avoids the possibility of changing the certification procedures in a way that departs from the I/M and warranty provisions. Since these programs are paired, there would never be a need to specify different reference procedures for the two programs.

b. Testing for Heavy-Duty Highway Engines

We recently completed the migration of test procedures for heavy-duty highway engines from 40 CFR part 86, subpart N, to 40 CFR part 1065. Now that these manufacturers are all relying the new test procedures, we are proposing to eliminate the regulatory provisions that no longer apply. This involves large portions of text in 40 CFR part 86, subpart N, that have been superseded by analogous material in 40 CFR part 1065, such as analyzer specifications, calibration procedures, calculation methods, and fuel specifications. The obsolete text also included several references to 40 CFR part 86, subpart D, which we are also proposing to no longer print in the CFR.

We are keeping regulatory provisions in 40 CFR part 86, subpart N, that serve as the ''standard-setting part'' for matters related to testing, such as the duty cycles and not-to-exceed test procedures. These provisions are unique to heavy-duty highway engines and are therefore not suitable for the general test specifications in 40 CFR part 1065.

In the case of testing in-use engines that were originally certified using the procedures in 40 CFR part 86, subpart N, we are including a regulatory provision that would allow EPA and manufacturers to continue to use the original certification procedures as a pre-approved alternate procedure.

c. Testing for Heavy-Duty Highway Vehicles

The regulations at 40 CFR part 85, subpart M, describe how to test heavy-duty vehicles above 14,000 lbs GVWR to demonstrate compliance with evaporative emission standards. Most of these provisions are identical to those that apply under 40 CFR part 86, subpart B. This can better be accomplished with appropriate references to the procedures in subpart B instead of repeating text. Relying on references to subpart B would eliminate many pages of unnecessary printing, but it would also make it easier for us to maintain a consistent set of requirements. Changing a provision in subpart B would automatically apply for evaporative testing of heavy-duty vehicles without making that duplicate change in subpart M. In addition, as noted in Section IV.C, we are proposing to allow manufacturers of these vehicles to rely on an engineering analysis instead of performing new tests. This would further reduce the need to have separate requirements spelled out for these vehicles. The revised regulations preserve provisions that are specific to heavy-duty vehicle testing. In particular, the heavy-duty procedure involves testing with a different driving schedule and wider speed tolerances, testing does not involve ethanol-blended test fuel, and exhaust emissions are not measured during the drive preceding the two-day diurnal emission test.

In some cases, the current regulations in subparts B and M include differences in test provisions that we are not preserving. Some of these differences arose from changes to subpart B that were inadvertently not carried over to subpart M. In other cases, there may have been an intentional distinction that no longer applies (such as provisions related to slippage on twin-roll dynamometers. Perhaps the most important of these include procedures for determining road load settings and for operating manual or automatic transmissions. Additional differences we are not preserving include gas divider specifications, SHED and dynamometer calibration procedures, and some provisions for alternative canister loading and vehicle preconditioning. We are also restoring paragraphs § 86.1235(b) through (i) related to dynamometer operating procedures, which were inadvertently removed in an earlier rulemaking. This leaner approach for vehicles above 14,000 lbs GVWR is also consistent with our proposed change to waive evaporative testing requirements for certifying these vehicles.

d. Service Information Requirements for Light-Duty Vehicles

The service information regulations were originally adopted for light-duty motor vehicles 40 CFR 86.038–96. These requirements applied for 1996 and later model year vehicles. Starting with the 2001 model year, these same requirements were copied into § 86.1808–01. These two sets of requirements are identical except for the model year applicability and a variety of very minor stylistic differences. We are proposing to revise the service information regulations in § 86.1808–01 to apply also to 1996 through 2000 model year vehicles, and to correct several typographical and formatting errors. These changes should have no practical significance, since the

[463] 58 FR 58382 (November 1, 1993)

requirements are the same in both regulatory sections.

3. Motorcycle Driving Schedules

The CFR includes two separate driving schedules for motorcycles. The first, for motorcycles at or above 170 cubic centimeters (cc), is identical to that used for light-duty vehicles except that the speeds are converted to kilometers per hour. The second driving schedule, for smaller motorcycles, is also identical except for a period of about three minutes of reduced-speed operation. To simplify this arrangement, and to make room for the new LA–92 driving schedule described in Section IV.B for heavy-duty vehicles, and also to allow for reference to m/s values as described above for light-duty vehicles, we are proposing to eliminate the identical portions of these drive schedules. This revised approach involves referencing the driving schedule for light-duty vehicles with instructions to convert to kilometers per hour and round the resulting speeds to the nearest 0.1 kilometers per hour, instead of repeating the driving schedule just to publish the same speed trace in different units. The unique portion of the driving schedule is laid out, with reference to the light-duty driving schedule for the portions that are unchanged. This is not intended to cause any change in the current requirements or practices for certifying motorcycles.

4. Updating Reference Procedures

The regulations in 40 CFR part 1065 depend on a large number of reference procedures and technical standards from ASTM, SAE International, and ISO, among others. These reference procedures and technical standards are updated periodically to keep them current with ongoing developments in the field. Many times these changes include only minor corrections or clarifications. In other cases the updates incorporate new test methods, accommodate changing engine technologies, or other more substantive changes. Whether the updated reference documents involve major changes or not, it is important for the regulations to rely on documents that are readily available. Toward that end, we plan to update § 1065.1010 with the latest versions of all the reference procedures and technical standards that we identify.

In areas of the regulations other than part 1065, we intend to rely on the latest reference documents where we are changing or adding a provision that depends on one of these reference documents, but we do not plan in this rulemaking to make broad or universal changes to these references.

One particular area of interest relates to rounding. As described in Section IV.F.3, we are proposing to define ''round'' for 40 CFR part 86 to have the meaning we give in 40 CFR 1065.20, which spells out a detailed rounding protocol that is consistent with ASTM E29 and NIST SP811. The proposed definition of ''round'' will defer to existing references in part 86 so that the part 1065 protocol will apply only where we do not specifically refer to ASTM E29. This is not intended to change the policy for calculating or reporting numerical quantities, but rather to clarify the protocol and avoid the administrative complication of referencing multiple versions of the ASTM document.

VII. What are the cost impacts of the proposed rule?

We have estimated the costs for both the proposed vehicle standards described in Section IV and the proposed fuel standards described in Section V. This section summarizes these costs, while further information on the methodology we used to develop these costs can be found in Chapters 2 and 5 of the draft RIA.

Section VII.C provides a summary of total costs for the proposed vehicle and fuel programs together. We have also compared the proposed program costs to the projected emission reductions in Section VII.D and compared these cost-effectiveness estimates to those for other programs. For a comparison of the program costs to the monetized health and welfare benefits, see Section VIII.

A. Estimated Costs of the Vehicle Standards

To determine the cost for vehicles, we first determined which technologies were most likely to be applied by vehicle manufacturers to meet the proposed standards assuming gasoline sulfur levels were reduced to a 10 ppm average. These technologies were then combined into technology packages which reflected vehicle design attributes that directly contribute to a vehicle's emissions performance. The attributes considered included vehicle type (car or truck), number of cylinders, engine displacement, and the type of fuel used (gasoline or diesel). We also created separate packages for light-duty and heavy-duty trucks and vans. In estimating both cost and technology application, we have relied on publicly available information (such as that developed by California), confidential information supplied by individual manufacturers and suppliers, and the results of our own in-house testing. The technology packages that we developed represent what we consider to be the most likely average emissions control solution for each vehicle type.

In general, we expect that the majority of vehicles would be able to comply with the Tier 3 standards which we are proposing through refinements of current emissions control components and systems. Some vehicles may require additional emission controls, such as large trucks with large displacement engines (in particular, LDT3s and LDT4s). Overall, smaller, lighter-weight vehicles will require less extensive improvements than larger vehicles and trucks. Specifically, we anticipate a combination of technology upgrades including:

- Catalyst Platinum Group Metal (PGM) Loading. Increased catalyst application of precious metals.
- Optimized Close-coupled catalyst: Improvements to the catalyst system design, structure, and packaging to reduce light-off time.
- Optimized Thermal Management: Overall thermal management of the emissions control system to improve to shorten the time it takes for the catalyst to light-off.
- Secondary Air Injection: Increased application of secondary air injection for some 6-cylinder and larger engines.
- Engine Calibration: Engine control and calibration modifications to improve air and fuel mixtures, particularly at cold start and/or to control secondary air and hydrocarbon adsorbers.
- Hydrocarbon Adsorber: Limited application of hydrocarbon adsorbers to trap hydrocarbons during cold start and release the hydrocarbons after the catalyst lights off.
- Evaporative Emissions Controls: Improved evaporative emissions systems, including canister scrubbers, more permeation-resistant materials, and improved system integration.

As stated above, we have developed our costs with respect to a given vehicle type and the type of engine with which it is equipped. Although the cost of achieving the proposed Tier 3 standards will increase with the size of the vehicle and the displacement of the engine, we have concluded that the cost for each engine type is independent of the type of vehicle in which it is equipped. For example, we estimate that the cost of catalyst loading for an in-line 4-cylinder (I4) engine will be the same whether the engine is in a car or a truck. The final cost per vehicle is the result of not only the cost per technology, but also the application rate of that technology for each vehicle type. For example, while

the $199 (2010$) cost of secondary air injection is the same for both a 6-cylinder (V6) and 8-cylinder (V8) application, we anticipate that only 25 percent of the V6 applications will require this technology, while 75 percent of the V8 applications will require it. Table VII–1 below shows our estimate of the cost of each of the emission control technologies for the gasoline vehicles affected by this proposed rule. Table VII–2 provides the anticipated application rate of the technology by vehicle type. Note that all of the costs shown in this section are in 2010 dollars, are applicable for the 2017 MY and are marked-up by an Indirect Cost Multiplier (ICM) so they include both direct and indirect costs. (For details of regarding ICMs and their application refer to Chapter 2 of the draft RIA.)

TABLE VII–1—2017MY TECHNOLOGY COSTS BY GASOLINE ENGINE TYPE (2010$)

Technology	Gasoline Engine Type [a]			
	I4	V6	V8	HD [c] V8
Catalyst Loading	$72	$95	$119	$60
Optimized Close-coupled Catalyst	24	48	72	72
Optimized Thermal Management	36	36	36	36
Secondary Air Injection	N/R [b]	119	119	N/R
Engine Calibration	2	2	2	2
Hydrocarbon Adsorber	N/R	N/R	201	N/R
Evaporative Emissions Controls	20	20	20	20

[a] I4—In-line 4-cylinder, V6: 6-cylinder, V8: 8-cylinder.
[b] N/R—Not Required.
[c] Heavy-duty.

TABLE VII–2—TECHNOLOGY APPLICATION RATES FOR GASOLINE VEHICLES

Technology	Technology application rate by vehicle type						
	I4 LDV (percent)	V6 LDV (percent)	V8 LDV (percent)	I4 LDT (percent)	V6 LDT (percent)	V8 LDT (percent)	HD V8 (percent)
Catalyst Loading	100	100	100	100	100	100	100
Optimized Close-coupled Catalyst	50	60	75	50	60	75	0
Optimized Thermal Management	25	25	25	25	25	25	25
Secondary Air Injection	N/R	25	75	0	25	75	N/R
Engine Calibration	100	100	100	100	100	100	100
Hydrocarbon Adsorber	N/R	N/R	15	0	0	15	N/R
Evaporative Emissions Controls	100	100	100	100	100	100	100

Medium Duty Passenger Vehicles (MDPVs) were included in the light-duty fleet as part of Tier 2. Given their current certification requirements for criteria pollutants, we have included the costs for MDPVs to meet the Tier 3 standards with the LDT4 cost estimates. We do not expect that the technologies required to meet the Tier 3 standards for MDPVs will be different from those applied to LDT4s, as in many cases identical powertrains and chassis exist between the LDT4 and MDPV platforms.

We also expect that manufacturers will continue to build and sell light-duty diesel vehicles and certify those vehicles to Tier 3. All light-duty diesel vehicles currently being sold in the federal fleet are equipped with some means of controlling NO_X emissions, either a Lean NO_X Trap (LNT) or SCR system. As these systems are already very effective in controlling NO_X emissions, we expect that they will remain the primary emissions control systems to meet Tier 3. Similar to gasoline engines, diesel powertrains may be required to improve the effectiveness of their emission control systems during cold start. Therefore, we have developed our costs for diesels with the expectation that the incremental costs will be realized to improve LNT and SCR systems during cold start. The improvements have been categorized as general SCR optimization, which include packaging changes to the SCR system to allow faster light off; Optimized Thermal Management, to reduce the thermal mass of the system and allow more of the combustion heat to reach the SCR system sooner; and the calibration work associated with both of these changes. Table VII–3 below describes both the cost of the technologies as well as their anticipated application rates.

TABLE VII–3—2017MYTECHNOLOGY COSTS AND APPLICATION RATES FOR DIESEL ENGINES

[2010$]

Technology	Diesel engine costs (all types)	Light-duty and heavy-duty application rate (percent)
Optimized Thermal Management	$36	25
Engine Calibration	2	100
SCR Optimization	60	100

Costs have also been estimated for HDVs between 8,501 and 14,000 lbs GVWR. Vehicles in this range are often referred to as Class 2b (8,5001–10,000 lbs) and Class 3 (10,001–14,000 lbs) vehicles and are typically full-size pickup truck and work vans. We applied the same process to the heavy-duty vehicles as we did to the light-duty vehicles. Heavy-duty costs and application rates may be found in Table VII–1, Table VII–2, and Table VII–3 above.

We have also considered the impacts of manufacturer learning on the technology cost estimates. We reflect the phenomenon of volume-based learning curve cost reductions in our modeling using two algorithms, depending on where in the learning cycle (i.e., on what portion of the learning curve) we consider a technology to be: the ''steep'' portion of the curve for newer technologies and ''flat'' portion of the curve for more mature technologies. The observed phenomenon in the economic literature which supports manufacturer learning cost reductions are based on reductions in costs as production volumes increase with the highest absolute cost reduction occurring with the first doubling of production. For additional information on technology learning refer to Chapter 2 of the draft RIA. Learning impacts have been considered on all of the technologies expected to be used with the assumption that all technologies are on the flat portion of the learning curve. We did not consider any of the technologies to be on the steep portion of the learning curve because none are being used for the first time in the 2017–2025 timeframe.

Finally, we have prepared our cost estimates for meeting the Tier 3 standards using a baseline of Tier 2 Bin 5 technologies for all LDVs, LDTs, and MDPVs. The baseline fleet used for these cost estimates is the MY 2016 light-duty fleet predicted by the 2012–2016 GHG Rule. The 2012 GHG Rule provides us with the clearest picture of what the light-duty fleet may look like in MY 2017. Additional details on how the 2017 MY fleet (i.e., the reference case fleet for this proposal) was developed can be found in Chapter 2 of the draft RIA. In short, the 2012–2016 GHG final rule is expected to result in considerable downsize of engines along with turbocharging to maintain performance. Since engines are expected to be downsized, the estimated Tier 3 costs are impacted since smaller engines are expected to incur lower costs as shown in Table VII–1.

Since GHG standards for the 2017–2025 fleet have just recently been finalized, we were not able to reflect their potential impacts on the baseline fleet in this proposal. We do not expect the MYs 2017–2025 GHG standards will change the technologies that we project will be used to comply with the proposed Tier 3 standards. However, some of the changes to the vehicle fleet expected to result from the MYs 2017–2025 GHG standards, such as a greater penetration of downsized engines, could lower the cost of complying with Tier 3 standards. The final Tier 3 rule will include the changes to the fleet associated with the GHG standards and the resulting impacts on cost.

The evaporative emissions standards that we are proposing for LDVs, LDTs, MDPVs, and HDVs are feasible with relatively small cost impacts. We estimate the cost of system improvements, including indirect cost markups, to be about $20 (2010$) per vehicle, for all car classes. This incremental cost reflects the cost of moving to low permeability materials, reduced number of fuel-system connections, longer contiguous lengths of plumbing, and low-permeation connectors. We believe that learning is also appropriate for evaporative emissions control systems as described above and in more detail in Chapter 2 of the draft RIA. We request comment on this detailed analysis. In particular, we request comment on the completeness of the list of emission control components needed for meeting the Tier 3 evaporative emission standards, especially regarding purge and purge-assist technologies.

We have used the individual technology costs discussed briefly here and in more detail in Chapter 2 of the draft RIA to estimate package costs for each of the different gasoline and diesel engine types in the fleet (i.e., I4 passenger car, V6 passenger car, etc.). We have then multiplied these package costs by the project sales estimates for the years 2017 and later. The projected sales estimates used, as noted earlier, represent the reference case fleet mix rather than today's fleet mix. That fleet mix is discussed in more detail in Chapter 2 of the draft RIA. With these total annual costs, we then determined the sales weighted average cost increase for all passenger cars, light trucks and heavy-duty vehicles. Table VII–4 below provides our estimates of the incremental cost per vehicle (both light-duty and class 2b and 3 vehicles) by model year for both tailpipe and evaporative emissions standards. These values reflect the total direct and indirect manufacturing costs as well as the appropriate learning rates. As stated above, a large portion of the cost is incurred in the initial model years due to the adoption of the LEV III declining fleet average. Costs then continue to rise as the percentage of vehicles complying with the proposed standards increases through the 2025 MY.

We have estimated costs consistent with the fact that manufacturers would be required to start the phase-in of Tier 3 standards in MY 2017 for vehicles under 6,000 lbs GVWR and MY 2018 for vehicles greater than 6,000 lbs GVWR. Based on the declining fleet averages for cars and trucks, we have apportioned our estimates for full compliance across the phase-in years as a percentage of the final standard. Manufacturers would be required to move from a Tier 2 Bin 5 fleet average in the 2017 MY (for vehicles <6,000 lbs GVW). This results in a significant step in stringency. As a result, a large portion of the costs are expected to be incurred in the initial model years. It is also important to note that while we are aligned with CARB on the individual cost of each technology and their application rates, our costs are different from California's LEV III costs due to the fact that the California fleet is currently meeting slightly more stringent standards than the federal fleet. Thus, the incremental cost for California is less. Finally, manufacturers would have the opportunity in 2015 and 2016 MY to earn Tier 3 credits by producing a fleet that is cleaner than the current Tier 2 requirements. While we expect that most manufacturers would earn credits, either by selling California vehicles as 50 state vehicles or by certifying existing vehicles to lower Tier 2 bins, we have not reflected these credits in our cost analysis. In that way, we believe that our cost estimates are conservative.

TABLE VII–4—PER VEHICLE COSTS BY MODEL YEAR [A]

Model Year	2017	2018	2019	2020	2021	2022	2023	2024	2025
$/car	$78	$87	$92	$99	$103	$112	$111	$115	$118
$/truck	0	105	114	127	136	150	151	159	165
Light-duty Combined	50	94	100	109	115	125	124	130	134

TABLE VII–4—PER VEHICLE COSTS BY MODEL YEAR [A]—Continued

Model Year	2017	2018	2019	2020	2021	2022	2023	2024	2025
$/2b (Truck or Van)	0	43	50	58	64	73	69	68	66
$/3 (Truck or Van)	0	38	46	55	63	73	69	68	66

[a] Costs shown include costs for the proposed Tier 3 standards on vehicles sold in all states except California.

Total annual costs are shown below in Table VII–5. This table includes all costs associated with the proposed Tier 3 vehicle standards, i.e., both exhaust and evaporative emission standards, for both light-duty vehicles and 2b and 3 heavy-duty pickup trucks and vans. Also included are facility related costs associated with the proposed requirements to conduct more PM testing on gasoline vehicles. (Additional detail regarding the PM facility costs are described below.) We show the facility costs in the year 2016 even though the program does not begin until 2017. These costs represent the construction cost that would have to be done in advance of the first year of the standards in preparation for the testing efforts that would be required. The annual costs shown for each cost element are undiscounted annual costs for the years 2016 through 2025, then 2030, 2040 and 2050. The present values shown are for the years 2012–2050 at both the 3 percent and 7 percent discount rates. We have shown present values in 2012 for comparison to EPA's 2012–2016 GHG final rule and the recent MYs 2017–2025 GHG rule and to more closely estimate the costs of the program today.

TABLE VII–5—UNDISCOUNTED ANNUAL COSTS & COSTS OF THE VEHICLE PROGRAM DISCOUNTED BACK TO 2012 AT 3% AND 7% DISCOUNT RATES

[Millions of 2010 Dollars] [a]

Year	Exhaust			Evap			Facilities	Total
	Light-duty	2b/3	All	Light-duty	2b/3	All	All	
2016	$0	$0	$0	$0	$0	$0	$22.5	$22.5
2017	634	0	634	71.4	0	71.4	3.75	709
2018	1,150	23.1	1,170	167	3.86	171	3.75	1,340
2019	1,240	28.6	1,270	159	3.76	162	3.75	1,440
2020	1,350	34.2	1,380	216	5.22	221	3.75	1,600
2021	1,470	40.0	1,510	208	5.09	213	3.75	1,730
2022	1,580	46.5	1,630	264	6.52	271	3.75	1,900
2023	1,610	44.8	1,660	253	6.27	259	3.75	1,920
2024	1,720	44.8	1,770	257	6.38	263	3.75	2,040
2025	1,830	44.9	1,870	246	6.12	253	3.75	2,130
2030	1,750	46.5	1,790	246	6.74	253	3.75	2,050
2040	1,750	51.9	1,800	246	7.52	254	3.75	2,060
2050	1,750	58.6	1,810	246	8.49	255	3.75	2,070
NPV, 3%	29,900	814	30,700	4,250	116	4,360	89.1	35,100
NPV, 7%	14,700	384	15,100	2,090	55.0	2,150	52.2	17,300

[a] Costs shown include costs for the proposed Tier 3 standards on vehicles sold in all states except California.

In addition to considering the costs associated with improving the emission control systems on vehicles, we also expect that manufacturers may need to improve their capability to measure PM at the levels we are proposing. For additional information on the test procedure changes we are proposing, reference Section IV.F.

We have used two sources of information to determine the appropriate costs for upgrading test facilities for PM measurement. The first was EPA's own cost to upgrade its PM measurement equipment; the second was information provided by vehicle manufacturers. The cost estimates ranged from $250,000 to $500,000 per PM test site.

We recognize that the number of sites that a manufacturer would require is dependent on the number of vehicle models it expects to develop and certify in a given model year. As stated in Section IV.A, we have limited the number of certifications required per model year to 25 percent of the represented durability groups, thereby potentially reducing the number of test sites that require upgrade. We believe that manufacturers with annual sales of one million units or less would require two facility upgrades at an average cost of $375,000. For manufacturers with greater than one million units per year annual sales we believe that four facility upgrades may be required to meet the Tier 3 requirements. In addition to facility upgrades some manufacturers may require an additional employee for PM weigh room operation and/or PM data management. Therefore we have added the cost of 1 additional full time employee for all manufacturers. Our estimated costs for each manufacturer are shown below in Table VII–6.

TABLE VII–6—PM FACILITY COSTS

[2010 dollars]

Annual Volume	Number of PM Sites to be upgraded	Cost per site	Total facility cost (one-time, up-front cost)	Additional FTE (annual, ongoing cost)
≤1 million	2	$375,000	$750,000	1 @ $150,000 per year.
> 1 million	4		1,500,000	
Total			22,500,000	$3,750,000.

[a] FTE—Full Time Employee.

B. Estimated Costs of the Fuel Program

1. Overview

The sulfur control program we are proposing today is expected to result in many refiners further investing in sulfur control hardware and changing the operations in their refineries to reduce their gasoline sulfur levels. The proposed sulfur control program requires refiners and importers to reduce their gasoline sulfur levels on average down to 10 ppm. The ABT provisions being proposed along with the 10-ppm average sulfur control standard would allow refiners that reduce their gasoline sulfur levels below 10 ppm to earn credits and transfer those credits to other refiners who would find it more expensive to reduce their sulfur levels down to the average standard. The ABT program would allow refiners to optimize their investments, which we believe would result in achieving the average sulfur control standard nationwide at lower costs. We are also proposing to either maintain the current 80-ppm sulfur cap at the refinery gate, or to lower it only as far as 50 ppm. We have modeled the impacts of the 80-ppm cap, but believe that the results for a 50-ppm cap would be comparable due to the limits on credits resulting from the 10-ppm average. We estimate that the national average refinery costs incurred to comply with the fully phased-in Tier 3 sulfur control program with ABT program would be 0.89 cents per gallon, averaged over all gasoline. This estimate includes the capital costs, which are amortized over the volume of gasoline produced.

In this section we summarize the methodology used to estimate the costs of Tier 3 sulfur control and our estimated costs for the program. A detailed discussion of all of these analyses is found in Chapter 5 of the draft RIA. We request comment on all aspects of the methodology described in Chapter 5 of the draft RIA used for estimating the cost of the program using the refinery-by-refinery cost model. In particular, we request comment on: the methodology for estimating the sulfur content of the FCC naphtha; how FCC naphtha sulfur levels are impacted by both an FCC pretreater and an FCC unit; to what extent desulfurization costs for complying with Tier 3 vary due to the sulfur level entering the existing FCC postreaters installed for Tier 2; the estimated level of hydrotreating of light straight run (LSR) naphtha and natural gas liquids (NGL) occurring today; the level of hydrotreating of LSR and NGLs expected to occur under this program and the magnitude of permitting-related costs in comparison to the overall project costs.

2. Methodology

a. Overview of the Sulfur Program Cost Methodology

The basic methodology we used to estimate the cost of sulfur control for the proposed rule is similar to that for other rulemakings. Using a refinery-by-refinery cost model that we developed for this rulemaking, we projected the sulfur control technology expected to be used by each refinery, and the cost of each refinery's sulfur control step, to estimate compliance with the proposed sulfur control program. We aggregated the individual refinery costs to develop a national average cost estimate for the proposed sulfur control program. Based on the flexibilities offered by the ABT program, refiners are expected to come very close to achieving the 10-ppm sulfur standard on average.

Linear Programming Cost Model

We considered performing our cost assessments using a linear programming (LP) cost model. LP cost models are based on a set of complex mathematical representations of refineries which, for national analyses, are usually conducted on a regional basis. This type of refining cost model has been used by the government and the refining industry for many years for estimating the cost and other implications of changes to fuel quality.

The design of LP models lends itself to modeling situations where every refinery in a region is expected to use the same control strategy and/or has the same process capabilities. As we began to develop a gasoline sulfur control program with an ABT program, it became clear that LP modeling was not well suited for evaluating such a program. Because refineries have different equipment, process different crude oils and produce different products, refiners will choose different technologies and run those technologies differently for controlling gasoline sulfur. In addition, because of the flexibility afforded by the nationwide ABT program, we initiated development of a more appropriate refinery-by-refinery cost model, as described below. However, the LP model remained important for providing many of the inputs into the refinery-by-refinery cost model developed for this rulemaking.

b. Refinery-by-Refinery Cost Model

In contrast to LP models, refinery-by-refinery cost models are useful when individual refineries are expected to respond to program requirements in different ways and/or have significantly different process capabilities. Furthermore, as is the case with sulfur control, such approaches are possible when the refinery changes required are primarily ''add on'' not impacting the fundamental operation at the refinery. Thus, in the case of modeling potential gasoline sulfur control programs, we needed a model that could accurately simulate the variety of decisions refiners will make at different refineries, especially in the context of a nationwide ABT program. For this and other related reasons, we developed a refinery-by-refinery cost model, built off the model developed for the MSAT2 rulemaking by Mathpro, specifically to evaluate the costs and other impacts of the proposed sulfur control program.

Our refinery-by-refinery sulfur cost model incorporates the capacities of all the major units in each refinery in the country, as reported by the Energy Information Administration and in the Oil and Gas Journal. Regarding operational information, we know less about how specific refineries use the various units to produce gasoline and about such factors as octane and hydrogen costs for individual refineries.

We used previous LP modeling work as the basis for estimating these factors on a regional basis, and we applied the average regional result to each refinery in that region (Petroleum Administration for Defense District; PADD). We compared the gasoline volumes estimated by the model for each individual refinery to the 2009 gasoline volumes from the RFG data base, which was the most recent year for which data was available, and we were satisfied with the model's volumetric estimates.[464]

Refinery-by-refinery cost models have been used in the past by both EPA and the oil industry for such programs as the MSAT2 gasoline benzene control, highway and nonroad diesel fuel sulfur standards, and they are a proven means for estimating the cost of compliance for fuel control programs. While they will never precisely model and predict individual refinery operations and impacts, they provide both a better assessment of the overall market impacts than the LP model and of the variation of impacts across the refineries. For this refinery-by-refinery sulfur cost model, we conducted a peer review process, and have received some comments on the design of our model. These comments are contained in the peer review reports placed in the docket. We intend on addressing the peer review comments, as well as any public comments that we receive on our cost analysis for the proposal, when we conduct the cost analysis for the final rule.[465] The oil industry has also conducted a similar analysis using a refinery-by-refinery cost model, and we discuss the results of their analysis at the end of this chapter.

The refinery unit responsible for the greatest contribution of sulfur to gasoline is the fluidized catalytic cracker unit (FCC). The FCC processes a very heavy feedstock which contains high levels of sulfur.[466] When the FCC cracks this heavy, sour feedstock, a portion of the sulfur in the feed to the FCC ends up in the FCC naphtha, an important gasoline blendstock stream.[467] Before the Tier 2 sulfur control program was implemented, FCC naphtha contributed over 95 percent of the sulfur to a refinery's gasoline, and now that Tier 2 has been fully implemented it still contributes roughly 80 to 90 percent for those refineries with FCC units. To comply with the Tier 2 sulfur control program, most refiners installed FCC naphtha hydrotreaters (FCC postreaters) and some refiners installed FCC feed hydrotreaters (FCC pretreater) to reduce that unit's sulfur contribution to their gasoline pool. The technologies installed include Axxens Prime G+, Exxon-Mobil Scanfining, CDTech's CDHydro and CDHDS, Phillips S-Zorb and UOP's ISAL (UOP now offers a postreating technology named Selectfining). Despite the much lower sulfur contribution to the gasoline pool by the FCC after complying with Tier 2, the vendors which supplied sulfur control technology for complying with Tier 2 sulfur control program have informed us that to comply with a more stringent sulfur standard refiners are expected to further reduce the sulfur in the FCC naphtha. We contacted each of those technology vendors and some of them provided information that we used to estimate the cost of lowering the sulfur in the FCC naphtha to allow each refinery to reduce the sulfur in its gasoline to 10 ppm. We also reviewed literature that is available on the Web to further educate ourselves of what would be involved to achieve a 10-ppm sulfur standard using postreating.

Gasoline desulfurization vendors were pessimistic that the operations of FCC pretreaters could be adjusted to enable those refineries which relied on those units to comply with the Tier 2 sulfur standard to meet a 10-ppm sulfur standard. For the refineries solely relying on FCC pretreaters to comply with Tier 2, desulfurization vendors project that most refineries in this situation will put in grassroots FCC postreaters to allow those refineries to comply with a 10-ppm gasoline sulfur standard. However, since adding grassroots FCC postreaters is expensive for the amount of sulfur reduction obtained, the ABT analysis we conducted avoided many of these types of investments. Instead refineries with both pre- and postreaters today are quite able to achieve further gasoline sulfur reductions less than 10 ppm at a relatively low incremental cost and selling the credits to those refineries who would otherwise be faced with grassroots FCC postreater investments.

In addition to addressing the sulfur in the FCC naphtha, we believe that some refineries may need to reduce the sulfur in at least a couple of other gasoline blendstocks to ensure that it would be able to comply with a 10-ppm sulfur standard. One such gasoline blendstock is light straight run (LSR) naphtha. Most refiners hydrotreat the LSR before sending that stream to an isomerization unit and therefore that stream is very low in sulfur. However, some refineries don't have isomerization units and probably do not hydrotreat the LSR. If LSR is not hydrotreated, we estimate that LSR could contain anywhere between 25 to 500 ppm sulfur. We believe that refiners that do not currently desulfurize their LSR could do so by either feeding it to their FCC postreater or their naphtha hydrotreater (the hydrotreater which desulfurizes the feed to the isomerization and reformer units). Because this stream does not contain any olefins, it is an easy stream to hydrotreat and actually improves the hydrotreating conditions within the FCC naphtha hydrotreater. The second stream that may have to be hydrotreated is butane. Butane is removed from the incoming crude oil and FCC naphtha and some of it is blended back into gasoline in the summertime to bring the gasoline pool up to the RVP limit. However, much of the butane is transported to storage for subsequent blending into the wintertime gasoline pool. We estimate that butane can range from 1 ppm to 140 ppm sulfur, but the typical sulfur level for butane is likely around 10 ppm. Because butane can be high in sulfur, we project that some refiners may add relatively inexpensive caustic extraction processes which can remove the types of sulfur present in the butane pool. However, addressing butane sulfur may only be necessary for those refineries that are reducing their gasoline sulfur levels down to 5 ppm to generate credits for sale to refiners seeking to purchase credits.

The nationwide ABT program is intended to optimize sulfur reduction by allowing each refinery to individually choose the most cost-effective means of complying with the program. To model this phenomenon, we first establish an estimated cost for each refinery for reducing its gasoline

[464] Our refinery-by-refinery analysis is better able to model the impacts of gasoline sulfur control than the refinery LP, yet, it is still limited by the lack of specific information on each refinery. Despite our commitment to accurately model the baseline operations of each refinery, we recognize that without detailed refinery-specific operations information at our disposal, actual individual refinery changes will vary from our predictions. Particular refineries may choose a different sulfur control path than that estimated by our analysis for a number of reasons, including differences in the baseline and our lack of knowledge for investment and ABT program use preferences for each refiner. We believe, though, that overall our refinery cost model captures the strategies and costs for complying with the sulfur control program.

[465] Our review of most of the suggested changes recommended by the peer reviewers suggested that there would be little to no change in our desulfurization cost estimate (some of the changes would increase the estimated costs, while others would reduce the estimated costs). Also, we anticipate making other improvements to the cost analysis conducted for the final rule, which would necessitate a second round of peer review.

[466] A hydrocarbon stream which contains large amounts of sulfur is also referred to as being sour. In general, the heavier the hydrocarbon portion of crude oil, the higher the natural sulfur content.

[467] On average, the fluidized catalytic cracker supplies about 35 percent of a refiner's gasoline output.

sulfur down to 10 ppm and to 5 ppm. Next we ranked the sulfur control strategies for all the refineries in order from lowest to highest sulfur control cost per gallon of gasoline and estimated the impact of their projected sulfur control strategies on refinery sulfur levels. The model then follows this ranking, starting with the lowest-cost refineries, and adds refineries and their associated control technologies one-by-one until the projected national average gasoline sulfur level reaches 10 ppm. This modeling strategy projects the sulfur control technology that will be used by each refinery, as well as identifies those refineries that are expected to generate credits and those that are expected to use credits in lieu of investing in sulfur control. The sum of the costs of the refineries expected to invest in further sulfur control provides the projected overall cost of the program.

3. Summary of Costs Without ABT Program

a. Nationwide Costs of the Proposed Sulfur Control Program

We used a refinery-by-refinery cost model to estimate the costs of the sulfur control program being proposed today. In general, the cost model indicates that further desulfurizing the FCC naphtha will be the most cost-effective means for achieving sulfur control. We accounted for additional costs to refiners for desulfurizing their light straight run naphtha, in the case where we estimate that the light straight run naphtha is not being desulfurized today.

Based on the results of our cost analysis, we estimate that for each refinery to get to a 10-ppm average level, (without the benefit of trading) the proposed sulfur control program would cost 0.97 cents per gallon when it is fully phased-in, assuming that capital investments are amortized at a seven percent return on investment before taxes and expressed in 2010 dollars. Refiners would be expected to make $2,527 million in capital investments to achieve this sulfur reduction.

We also estimated annual aggregate costs, including the amortized capital costs, associated with the new fuel standard. When the 10-ppm gasoline sulfur standard would take effect in 2017, we estimate that the sulfur standard would cost $580 million per year.

b. Distribution of Refinery Costs

The sulfur reductions estimated by the cost model and associated costs vary significantly refinery-by-refinery. Figure VII–1 summarizes the estimated per-gallon costs for complying with the sulfur control standard if no ABT program were implemented.

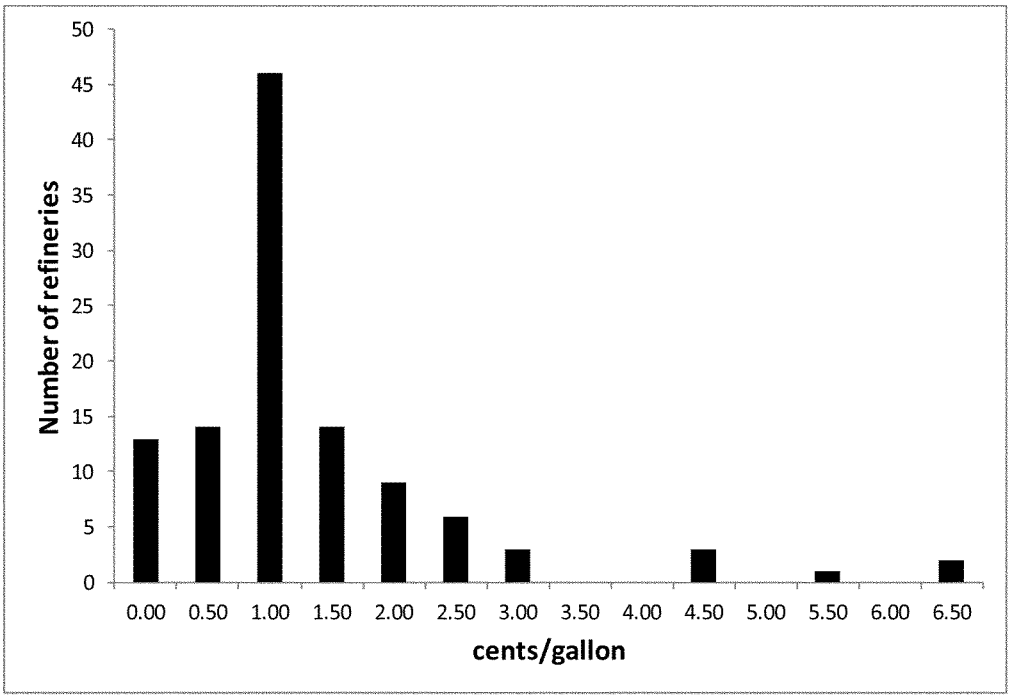

Figure VII-1 Projected Refinery-by-Refinery Sulfur Control Costs for the Proposed Sulfur Control Program Assuming No ABT Program

Figure VII–1 shows that the sulfur control costs would vary from no cost to almost 6.5 cents per gallon. Some refineries have no FCC unit and thus, their gasoline is naturally low in sulfur and these refineries will not reduce their gasoline sulfur levels and not incur a sulfur control cost.

4. Summary of Costs With ABT Program

The estimated costs described in Section VII.B.3 above assume that every individual refinery must achieve the proposed 10-ppm sulfur standard on an annual average basis. However, as described in Section V.A.4, we are also proposing an ABT program that is designed to ease the overall burden on the industry while still achieving the 10-ppm annual average sulfur standard for the nation as a whole. Under the proposed ABT program, refineries that can reduce sulfur below 10 ppm at a relatively low cost can generate credits which can then be obtained by refiners for whom the cost of attaining the 10-ppm sulfur standard would be relatively

high. The net effect of this credit trading would be to reduce the overall cost of the program.

To estimate the impact that the ABT program could have on nationwide average fuel costs, we began with the refinery-by-refinery costs described in Section VII.B.2.b for sulfur reductions down to either 10 ppm or 5 ppm. We then determined the lowest cost option among three alternatives for each refinery:

1. The refinery reduces its sulfur to 10 ppm.
2. The refinery reduces its sulfur to 5 ppm and generates credits for the increment between 10 ppm and 5 ppm.
3. The refinery does not lower sulfur, but instead relies on the purchase of credits to comply with the 10-ppm standard.

A fourth category applied to refineries whose average gasoline sulfur levels are already below 10 ppm (there refineries don't have FCC units). All such refineries were assumed to generate credits for the increment between 10 ppm and their current sulfur level.

To simplify the modeling of how an ABT program might operate, we focused on the circumstances that refineries would face in the longer term, specifically after 2020. This approach meant that the ABT program modeling did not consider the impact on gasoline sulfur levels of delayed compliance for small refiners and small volume refineries, nor did it consider the generation and use of any early sulfur credits. Moreover, our ABT modeling considered only gasoline sold for use outside of California, and only gasoline produced by domestic refineries (not importers).

To optimize the nationwide average costs under an ABT program, we determined the credit price at which the total number of credits generated was equal to the total number of credits consumed. For an idealized scenario in which every refinery has the opportunity to make credit trades with every other refinery in the nation, we determined that more than 60 percent of refineries would be involved in either generating or consuming credits. The nationwide average cost of compliance with the 10-ppm sulfur standard would be reduced from 0.97 cents per gallon to 0.79 cents per gallon.

Such perfect nationwide trading, however, is not realistic. Under Tier 2 today, a significant fraction of Tier 2 sulfur credits are bought and sold within companies, but there is still a considerable amount of inter-company trading occurring. Under Tier 3, it would be more difficult to generate credits, and also more difficult to make up for deficits, consequently, we also investigated how more limited credit trading might affect the average cost of compliance with the 10-ppm sulfur standard. For instance, to address unplanned equipment downtime or other circumstances that could make future compliance more difficult, individual companies might decide to bank credits for their own use, declining to make credits that they generate at one of their facilities available to other companies. To evaluate such a scenario, we modeled a situation wherein credit trading would only occur within companies that own more than one refinery. Of the 21 refining companies in this position, we estimated that credit generation and use would reduce compliance costs at six of them, with 18 refineries generating credits and 8 consuming credits. Under this scenario, total capital costs would be $2,203 million and the nationwide average cost of compliance with the 10-ppm sulfur standard would be 0.89 cents per gallon. We have chosen to utilize the costs from this intra-company trading analysis for the proposal. However, in reality, we expect that some inter-company credit transfers would still occur due to the financial incentive the highest cost refineries would provide. To the extent that some inter-company credit transfers do occur, our cost estimates can be viewed as somewhat conservative.

A summary of the ABT results assuming nationwide credit transfers and intra-company credit transfers (costs used in the proposal) is shown in Table VII–7.

TABLE VII–7—IMPACTS OF NATIONWIDE ABT PROGRAM

	No ABT	ABT with intra-company credit transfers (proposed rule costs)	ABT with nationwide credit transfers
Average fuel cost (¢/gal)	0.97	0.89	0.79
Total capital cost ($million)	2,527	2,203	1,760
Number of refineries that generate credits	0	18	46
Number of refineries that consume credits	0	8	25
Number of refineries that neither generate nor consume credits	111	85	40

The cost information available for this NPRM was limited to the costs of reducing sulfur to either 10 ppm or 5 ppm, and thus we were not able to estimate refinery-specific costs of reducing sulfur to other levels. As a result, our ABT modeling could not account for scenarios in which a refinery makes some capital investments to lower sulfur to some interim level, such as 20 ppm, and then purchases credits in order to demonstrate compliance with the 10-ppm standard. Our ABT analysis also could not account for credit generation at sulfur levels other than 5 ppm. Our ABT analysis, then, most likely underestimates the cost savings that could occur due to ABT since the greatest efficiencies are achieved when every refinery has the option of using any combination of capital investments and credits generation or use. For the final rule, we may investigate methods for expanding our ABT analysis to examine these types of scenarios.

a. Distribution of Refinery Costs

The sulfur reductions estimated by the cost model and associated costs vary significantly refinery-by-refinery. Figure VII–2 summarizes the estimated per-gallon costs for complying with the sulfur control standard under an ABT program with intra-company credit transfers.

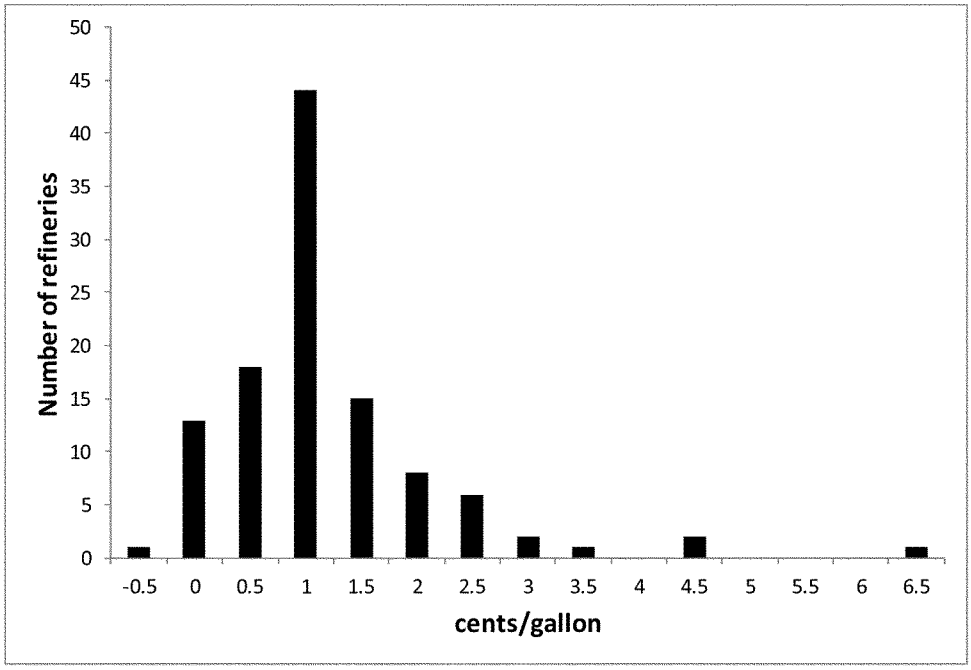

Figure VII-2 Projected Refinery-by-Refinery Sulfur Control Costs for the Proposed Sulfur Control Program with ABT and Intra-Company Credit Transfers

While the distribution of costs shifts slightly under an ABT program with intra-company trading in comparison to no ABT program, Figure VII–2 shows that the sulfur control costs would continue to vary from no cost to nearly 6.5 cents per gallon.

b. Distribution of Refinery Sulfur Levels

We estimate that 85 out of 111 refineries would meet the 10-ppm sulfur standard without the use of credits under the intra-company trading scenario. As a result, only about 5 percent of gasoline would continue to have an annual average sulfur level above 10 ppm. These refineries tend to be smaller than average. The distribution of sulfur levels under this scenario is shown in Figure VII–3.

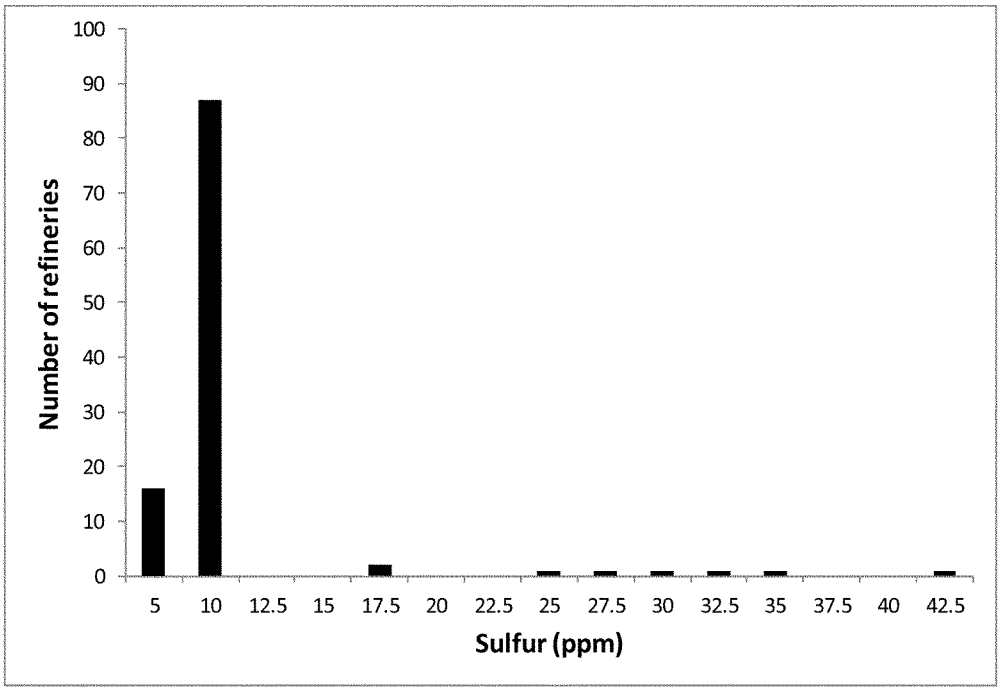

Figure VII-3 Projected Refinery-by-Refinery Sulfur Levels for the Proposed Sulfur Control Program with ABT and Intra-Company Credit Transfers

5. Other Cost Estimates

Three other cost studies were recently conducted to estimate the cost of additional reduction in gasoline sulfur. All of these studies show average costs of less than 2 cents per gallon.

One of these studies was conducted in October 2011 by the International Council for Clean Transportation (ICCT).[468] ICCT retained Mathpro for this analysis. ICCT had Mathpro analyze a 10-ppm average gasoline sulfur standard in PADDs 1–4 (generally speaking, PADDs 1–4 represents the part of the U.S. east of, and including, the Rocky Mountain states). The cost presented by ICCT is that complying with a 10-ppm average sulfur standard would cost refiners on average 0.8 cents per gallon. This cost was calculated based on a before-tax 7 percent return on investment, the same capital amortization basis that we use for our cost analysis. The cost of a 10-ppm average gasoline sulfur control standard estimated by ICCT is very close to our cost estimate.

API retained Baker and O'Brien to study the cost of additional sulfur control using a refinery-by-refinery cost approach with Baker and O'Brien's Prism model. [469] API studied a 10 ppm average gasoline sulfur standard, however, API included a very stringent 20 ppm cap standard which did not allow for an ABT program to optimize refinery investments and minimize overall costs.

API made a series of conclusions based on the study. Perhaps the most important conclusion is that no refinery would shut down as a result of the proposed 10 ppm gasoline sulfur control standard, even though API did not study the flexibilities of an ABT program and used excessively high capital costs for a grassroots FCC postreater (see below). API did not report average costs, but reported the marginal costs for the cost study. Marginal costs reflect the cost of the program to the refinery or refineries which would incur the highest costs, assuming that the highest cost refineries would set the price (or in this case, the price increase) of gasoline. The report concluded that marginal costs after the imposition of a 10 ppm gasoline sulfur program would increase the price of gasoline by 6 to 9 cents per gallon in most markets. API did not define how its statement ''in most markets'' would apply to the U.S. gasoline supply. API also did not provide any justification why it assumed that the refineries that would experience the highest desulfurization cost under Tier 3 would also be the same refineries which sets the gasoline price in the gasoline market today.

Although API did not provide an average gasoline desulfurization cost in its report, we could calculate an average cost based on the gasoline volume and total annual costs provided. The total cost reported in the report for the 10 ppm average gasoline sulfur standard is $2390MM/yr and the non-California gasoline volume is 7343 thousand barrels per day. This results in an average per-gallon desulfurization cost of $0.89/bbl or 2.12 c/gal. The difference between the average cost and marginal cost (price increase) that API is projecting is profit. Thus, API's analysis would suggest that the oil industry would profit from 10 ppm low sulfur standard by roughly 4 to 7 cents per gallon, or roughly $4 to $8 billion dollars per year as a result of gasoline sulfur control.

The average cost of the 10 ppm average gasoline sulfur standard

[468] Mathpro (October 2011). Refining Economics of a National Low Sulfur, Low RVP Gasoline Standard, Performed for The International Council for Clean Transportation, Available at: *http://www.theicct.org/sites/default/files/publications/ICCT04_Tier3_Report_Final_v4_All.pdf.* Accessed December 12, 2011.

[469] Baker and O'Brien, Addendum to Potential Supply and Cost Impacts of Lower Sulfur, Lower RVP Gasoline; prepared for The American Petroleum Institute. March 2012. Available at: *http://www.api.org/Newsroom/upload/110715_LowerSulfur_LowerRVP_Final.pdf.*

described above was calculated using API's methodology for amortizing capital investments. To assess the costs consistent with OMB's guidance for our rulemakings and to allow a direct comparison between the API cost study and our cost study, we adjusted the API costs to be on a similar basis as our costs. We adjusted the API costs to reflect a before-tax 7 percent return on investment (ROI) for capital invested for the hydrotreaters and hydrogen plants instead of the after-tax 10 percent ROI used by API. This lowered the API estimated costs from 2.12 c/gal to 1.58 c/gal. API's 1.58 cents per gallon cost is still higher than our 0.89 c/gal cost with an ABT program that assumes intercompany trading of credits, and higher than our 0.97 c/gal for the case which assumes no ABT program. The remaining difference between our estimated costs and those by API are driven by API's assumptions for the capital costs that would be incurred for adding grassroots FCC postreaters, or revamping existing ones.

While little detail is provided by API about what hardware comprises their desulfurization units, the inside battery limits (ISBL) and total capital costs for the FCC postreaters and FCC pretreaters are provided in API's report. API's FCC pretreaters capital costs are consistent with the capital costs that we have used for this unit. However, the FCC postreater costs used by API are much higher than what we used and have been used in the past by others. API's capital cost for a grassroots FCC postreater is $228 million for a 35,000 bbl/day unit, or $6540 per/bbl per day. API's capital cost includes the outside battery limit (OSBL) costs. In contrast, the ISBL capital cost that we used for a grassroots FCC postreater is $1500/bbl-day for a 30,000 bbl/day grassroots unit, which increases to $1875/bbl/day when the offsite costs are added on. Thus, the API capital costs are about 3½ times higher than the capital costs that we are using for a grassroots FCC postreater. To check our capital costs, we found other capital cost estimates to which we could compare our costs, including the capital costs used by the National Petroleum Council when it studied the cost of gasoline desulfurization prior to Tier 2. Compared to the average of the rest of the capital cost estimates, the API capital cost for FCC postreater is about four times higher. Compared to the next highest cost estimate, which is the FCC postreater capital cost from the Jacobs data base in the Haverly refinery cost model that we use,[470] the API capital costs are almost two times higher.

An important distinction must be made with respect to the severity of desulfurization for the capital cost comparison made for complying with Tier 2 versus Tier 3. For complying with the Tier 2 gasoline sulfur standard (Jacobs and NPC costs), a typical refinery would have installed an FCC postreater to desulfurize the FCC naphtha from about 800 ppm down to about 75 ppm, a 725 ppm, or a 91 percent sulfur reduction. In the case of a grassroots postreater that would be installed for Tier 3, the postreater would treat FCC naphtha already low in sulfur due to the pretreater installed before the FCC unit (these refineries are currently complying with Tier 2 using an FCC pretreater). Thus, the new grassroots FCC postreater would only have to reduce the FCC naphtha from 100 ppm to 25 ppm, a much smaller 75 ppm or 75 percent sulfur reduction. A grassroots FCC postreater installed for Tier 2 would typically remove 10 times more sulfur than one installed for Tier 3. This is important because a significant portion of the FCC postreater capital cost is devoted to avoiding the recombination reactions which occur when hydrogen sulfide concentrations are high and react with the olefins contained in the FCC naphtha. Thus, a grassroots FCC postreater installed for Tier 3 would be expected to be significantly lower in capital cost compared to a Tier 2 FCC postreater. When API presented the costs, they stated that their grassroots capital costs were based on an actual installation for the Tier 2 program. This could be one reason why the capital costs used by API for its cost study of the Tier 3 program are so high. Another way to assess the API capital cost for the FCC postreaters is to compare it to the FCC pretreater cost that API is using. FCC pretreaters are much higher pressure units and use more expensive metallurgy than FCC postreaters and, for these two reasons, are much more expensive than FCC postreaters on a per-barrel basis. However, API's FCC postreater capital costs are about 50 percent more expensive than its own FCC pretreater capital costs, which is inconsistent with the design requirements of the units.

API's estimated range of capital cost for revamping an FCC postreater is also higher than our range of capital cost for revamping an FCC postreater, when assessing the revamped costs as a percentage of the capital cost for a grassroots unit. API estimates that revamping an FCC postreater would cost 30 to 70 percent of the capital cost for a grassroots FCC unit. Our capital cost estimate for revamping an FCC naphtha postreaters from 17 to 50 percent of the capital cost for a grassroots FCC postreater, however, most of the revamps are estimated to cost at the lower end of that range. Were we to adjust the API study capital costs, the projected costs would fall right in line with the other studies.

Our assessment of the API study is supported by work performed by The Emissions Control Technology Association (ECTA) which retained personnel within Navigant Economics. That study assessed the costs of a 10 ppm average gasoline sulfur standard and also evaluated the ICCT and API cost studies.[471] The authors made a number of conclusions. After reviewing both the ICCT and API studies, the authors found that a primary difference in estimated costs between the two studies was the capital costs. The authors contacted vendor companies that license FCC postreater technologies and surveyed the companies to find out what the capital costs are for a FCC postreater. As a result of the survey, the report authors concluded that API's capital costs were too high, and those used in the ICCT study were about right. The authors found that Baker and O'Brien has a history of exaggerating the economic impacts of EPA rules, citing the costs and other impacts of its analysis of the 2007 on-highway heavy-duty proposed rulemaking. The authors concluded that the impact of a 10 ppm gasoline sulfur standard on the average refining cost would likely be closer to the 1 cent per gallon estimate by the ICCT study. Furthermore, the report's authors also pointed out that the marginal cost analysis conducted by API did not consider the proposed averaging banking and trading (ABT) program that we were expected to propose, which would reduce the marginal costs of the Tier 3 proposed rule.

C. Summary of Proposed Program Costs

While the estimated costs for the separate proposed vehicle and proposed fuel programs are presented in Sections VII.A and VII.B, respectively, it is useful to present the combined cost estimates representing our full proposal. Such combined costs are also necessary in

[470] The installed capital cost for an FCC postreater from the Jacobs data base was adjusted to current year dollars. This estimated installed capital cost is several years old and may not represent Jacobs current cost estimate for a FCC postreater.

[471] Schink, George R., Singer, Hal J., Economic Analysis of the Implications of Implementing EPA's Tier 3 Rules, prepared for the Emissions Control Technology Association, June 14, 2012.

calculating the cost-effectiveness of the standards in today's proposal as described more fully in Section VII.D below.

We have chosen to use an annual, nationwide cost format to represent the combined vehicle and program costs because this approach provides the most straightforward means for comparing vehicle costs to fuel costs, and for demonstrating the total cost impact of our proposed program. This approach to combined costs also provides a basis for comparing the program costs to the projected benefits as described more fully in Section VIII.

Table VII–8 below shows our estimated program costs by year. Complete details of this analysis can be found in the draft RIA.

TABLE VII–8—TOTAL ANNUAL VEHICLE AND CONTROL COSTS, 2010$ [a]

Year	Vehicle exhaust emission control costs ($Million)	Vehicle evaporative emission control costs ($Million)	Facility costs ($Million)	Fuel sulfur control costs ($Million)	Total proposed program costs ($Million)
2016	$0	$0	$22.5	$322	$345
2017	634	71.4	3.75	1,289	1,998
2018	1,170	171	3.75	1,288	2,628
2019	1,270	162	3.75	1,285	2,725
2020	1,380	221	3.75	1,284	2,884
2021	1,510	213	3.75	1,287	3,017
2022	1,630	271	3.75	1,289	3,189
2023	1,660	259	3.75	1,288	3,208
2024	1,770	263	3.75	1,289	3,329
2025	1,870	253	3.75	1,291	3,421
2030	1,790	253	3.75	1,320	3,370

[a] Costs shown include costs for the proposed Tier 3 standards on vehicles sold in all states except California.

D. Cost per Ton of Emissions Reduced

This section summarizes the cost per ton analysis conducted by EPA and its results. The emission reductions used to calculate the costs per ton reported here are consistent with those reductions presented as part of our inventory impacts analysis as described in Section III.B. The costs used to calculate the costs per ton are consistent with the vehicle and fuel control costs presented in Sections VII.A and VII.B, respectively. We have calculated the aggregate costs per ton which uses the costs and emission reductions for calendar years 2017 and 2030, consistent with the years that we evaluated for air quality analysis. For more information on how the cost per ton was calculated please refer to Section 8.2 of the draft RIA.

Note that, even though we are setting new standards for PM, we believe that those standards would be met in complying with the NMOG+NO_X standards with additional care being given to proper engineering/calibration, so there is no cost associated with the new PM standard and therefore no separate cost per ton analysis for PM. Likewise, as described more fully in Sections IV.A and IV.B, while we are also proposing new standards for CO and formaldehyde, we are not attributing any of the control costs to these pollutants since the technologies employed to meet the NO_X+NMOG standards would also allow the CO and formaldehyde standards to be met.

The total program costs, the NO_X+VOC reductions, and results of our cost per ton analysis are provided in Table VII–9. The costs of the proposed program would be higher immediately after it is implemented than they would be after several years, since both vehicle manufacturers and refiners can take advantage of decreasing capital and operating costs over time. In addition, the reductions in NO_X and VOC emissions would become greater as a larger percentage of the fleet contains the technologies required to meet the proposed standards.

TABLE VII–9—COSTS PER TON OF EMISSIONS REDUCED IN 2017 AND 2030 [a]

	Total proposed program cost ($Million, 2010$)	Total NO_X + VOC reductions (tons)	Cost effectiveness ($/ton)
2017	$1,999	329,162	$6,072
2030	3,367	750,818	4,484

[a] Costs shown include costs associated with the proposed Tier 3 vehicle and fuel in all states except California.

VIII. What are the estimated benefits of the proposed rule?

This section presents EPA's analysis of the criteria pollutant-related health and environmental impacts that would occur as a result of the proposed Tier 3 standards. The vehicles and fuels subject to the proposed standards are significant sources of mobile source air pollution such as direct PM, NO_X, SO_X, VOCs and air toxics. The standards would affect exhaust and evaporative emissions of these pollutants from vehicles. Emissions of NO_X (a precursor to ozone formation and secondarily-formed $PM_{2.5}$), SO_X (a precursor to secondarily-formed $PM_{2.5}$), VOCs (a precursor to ozone formation and, to a lesser degree, secondarily-formed $PM_{2.5}$) and directly-emitted $PM_{2.5}$ contribute to ambient concentrations of $PM_{2.5}$ and ozone. Exposure to ozone, $PM_{2.5}$, and air toxics is linked to adverse human health impacts such as premature deaths as well as other important public health and environmental effects.

For the proposal, we have estimated the health and environmental impacts in 2030, representing impacts associated with a year when the program is fully implemented and when most of the fleet is turned over. Overall, we estimate that

the proposed standards would lead to a net decrease in $PM_{2.5}$- and ozone-related health impacts. The decrease in population-weighted national average $PM_{2.5}$ exposure results in a net decrease in adverse PM-related human health impacts (the decrease in national population-weighted annual average $PM_{2.5}$ is 0.05 μg/m³ in 2030). The decrease in population-weighted national average ozone exposure results in a net decrease in ozone-related health impacts (population-weighted maximum 8-hour average ozone decreases by 0.52 ppb in 2030).[472]

Using the lower end of EPA's range of preferred premature mortality estimates (Pope et al., 2002 for $PM_{2.5}$ and Bell et al., 2004 for ozone),[473] [474] we estimate that by 2030, implementation of the proposed standards would reduce approximately 970 premature mortalities annually and yield approximately $9.5 billion in total annual benefits. The upper end of the range of avoided premature mortality estimates associated with the proposed standards (based on Laden et al., 2006 for $PM_{2.5}$ and Levy et al., 2005 for ozone) [475] [476] results in approximately 2,800 premature mortalities avoided in 2030 and yields approximately $27 billion in total benefits. Thus, even using the lower end of the range of premature mortality estimates, the health impacts of the proposed standards presented in this rule would clearly be substantial.

We note that of necessity decisions on the emissions and other elements used in the air quality modeling were made early in the analytical process for this proposal. For this reason, the Tier 3 emission control scenario used in the air quality and benefits modeling includes emission reductions from Tier 3 across the nation, assuming no reductions associated with California's LEV III program (as opposed to including California's LEV III program and its associated emission reductions in the baseline scenario). This was because EPA had not granted California a waiver of preemption under CAA section 209 for the LEV III program at the time EPA conducted the air quality modeling. EPA did include California's fuel program, which independent of LEV III was already resulting in average gasoline sulfur levels of 10 ppm, in the baseline scenario. Since then, EPA granted a waiver for California's LEV III program (78 FR 2112, January 9, 2013) and ten states have adopted the LEV III program under Section 177 of the Clean Air Act. Based on this change in circumstances, we will conduct new air quality modeling for the final rule that will include emission reductions from California's LEV III program, both in California and in states that by that time have adopted the LEV III program, in the baseline scenario.

Had we modeled the California LEV III emission impacts in the Tier 3 air quality baseline, we estimate that benefits would decrease by approximately 12–16 percent, depending on the particular health impact functions used to characterize both PM- and ozone-related premature mortality.[477] As a result, we estimate that in 2030, using the lower end of EPA's range of preferred premature mortality estimates (Pope et al., 2002 for $PM_{2.5}$ and Bell et al., 2004 for ozone), the proposed standards would reduce approximately 820 premature mortalities annually and yield approximately $8.0 billion in total annual benefits. The upper end of the range of avoided premature mortality estimates associated with the proposed standards (based on Laden et al., 2006 for $PM_{2.5}$ and Levy et al., 2005 for ozone) results in approximately 2,400 premature mortalities avoided in 2030 and yields approximately $23 billion in total benefits. These are rough estimates since, without new photochemical air quality modeling to reflect the revised baseline and control scenarios, we are unable to account for cross-state transport of pollution into or out of California or Section 177 states. However, we believe this is a reasonable characterization of the small reduction in benefits had we modeled the emission reductions of the LEV III program in California and other state that adopt the LEV III program in the baseline. We believe our overall cost-benefit conclusions do not materially change with or without the inclusion of emission reductions from California and in other states that adopt the LEV III program in our analysis. We will conduct new air quality modeling for the final rule that will include emission reductions from the LEV III program in California, and in states that have adopted the program, in the baseline scenario. The rest of this section presents benefits that include emission reductions from the LEV III program.

A. Overview

We base our analysis of the program's impact on human health on peer-reviewed studies of air quality and human health effects.[478] [479] These methods are described in more detail in the draft RIA that accompanies this action. Our benefits methods are also consistent with rulemaking analyses such as the final 2012–2016 MY Light-Duty Vehicle Rule,[480] the final Portland Cement National Emissions Standards for Hazardous Air Pollutants (NESHAP) RIA,[481] the final 2014–2018 MY Heavy-Duty Vehicle Rule,[482] and the final 2017–2025 MY Light-Duty Vehicle

[472] Note that the national, population-weighted $PM_{2.5}$ and ozone air quality metrics presented in this Section represent an average for the entire, gridded U.S. CMAQ domain. These are different than the population-weighted $PM_{2.5}$ and ozone design value metrics presented in Chapter 7, which represent the average for areas with a current air quality monitor.

[473] Pope, C.A., III, R.T. Burnett, M.J. Thun, E.E. Calle, D. Krewski, K. Ito, and G.D. Thurston. (2002). Lung Cancer, Cardiopulmonary Mortality, and Long-term Exposure to Fine Particulate Air Pollution. *Journal of the American Medical Association,* 287, 1132–1141.

[474] Bell, M.L., et al. (2004). Ozone and short-term mortality in 95 U.S. urban communities, 1987–2000. *Journal of the American Medical Association, 292(19),* 2372–2378.

[475] Laden, F., J. Schwartz, F.E. Speizer, and D.W. Dockery. (2006). Reduction in Fine Particulate Air Pollution and Mortality. *American Journal of Respiratory and Critical Care Medicine. 173,* 667–672.

[476] Levy, J.I., S.M. Chemerynski, and J.A. Sarnat. (2005). Ozone exposure and mortality: an empiric bayes metaregression analysis. *Epidemiology. 16(4),* 458–68.

[477] To conduct this sensitivity analysis, we simply assumed no air quality change in the California portion of the CMAQ domain. We then exported the reference and control air quality surfaces to be used as inputs to BenMAP. Note that this simple approach is unable to account for legitimate emissions impacts related to cross-state transport of pollution.

[478] U.S. Environmental Protection Agency. (2006). *Final Regulatory Impact Analysis (RIA) for the Proposed National Ambient Air Quality Standards for Particulate Matter.* Prepared by: Office of Air and Radiation. Retrieved March, 26, 2009 at *http://www.epa.gov/ttn/ecas/ria.html.*

[479] U.S. Environmental Protection Agency. (2008). *Final Ozone NAAQS Regulatory Impact Analysis.* Prepared by: Office of Air and Radiation, Office of Air Quality Planning and Standards. Retrieved March, 26, 2009 at *http://www.epa.gov/ttn/ecas/ria.html.*

[480] U.S. Environmental Protection Agency. (2010). *Final Rulemaking to Establish Light-Duty Vehicle Greenhouse Gas Emission Standards and Corporate Average Fuel Economy Standards: Regulatory Impact Analysis,* Assessment and Standards Division, Office of Transportation and Air Quality, EPA–420–R–10–009, April 2010. Available on the internet: *http://www.epa.gov/otaq/climate/regulations/420r10009.pdf.*

[481] U.S. Environmental Protection Agency (U.S. EPA). (2010). Regulatory Impact Analysis: National Emission Standards for Hazardous Air Pollutants from the Portland Cement Manufacturing Industry. Office of Air Quality Planning and Standards, Research Triangle Park, NC. Augues. Available on the Internet at <*http://www.epa.gov/ttn/ecas/regdata/RIAs/portlandcementfinalria.pdf* >. EPA–HQ–OAR–2009–0472–0241

[482] U.S. Environmental Protection Agency. (2011). *Final Rulemaking to Establish Greenhouse Gas Emissions Standards and Fuel Efficiency Standards for Medium- and Heavy-Duty Engines and Vehicles: Regulatory Impact Analysis,* Assessment and Standards Division, Office of Transportation and Air Quality, EPA–420–R–11–901, August, 2011. Available on the Internet at *http://www.epa.gov/oms/climate/documents/420r11901.pdf.*

Rule.[483] To model the ozone and PM air quality impacts of the proposed standards, we used the Community Multiscale Air Quality (CMAQ) model (see Chapter 7.2.2 of the draft RIA that accompanies this preamble). The modeled ambient air quality data serves as an input to the Environmental Benefits Mapping and Analysis Program version 4.0 (BenMAP).[484] BenMAP is a computer program developed by the U.S. EPA that integrates a number of the modeling elements used in previous analyses (e.g., interpolation functions, population projections, health impact functions, valuation functions, analysis and pooling methods) to translate modeled air concentration estimates into health effects incidence estimates and monetized benefits estimates.

The range of total monetized ozone- and PM-related health impacts in 2030 is presented in Table VIII–1. We present total benefits based on the PM- and ozone-related premature mortality function used. The benefits ranges therefore reflect the addition of each estimate of ozone-related premature mortality (each with its own row in Table VIII–1) to estimates of PM-related premature mortality. The analysis of the proposed standards reflects EPA's work to characterize benefits prior to the most recent PM NAAQS.[485] EPA will update its benefits analysis, and related uncertainty analysis, to be consistent with the final PM NAAQS for the final Tier 3 regulatory impact analysis.

TABLE VIII–1—ESTIMATED 2030 MONETIZED PM- AND OZONE-RELATED HEALTH BENEFITS [a] [b]

Premature ozone mortality function	Reference	Total benefits (billions, 2010$, 3% discount rate) [c] [d]	Total benefits (billions, 2010$, 7% discount rate) [c] [d]
2030 Total Ozone and PM Benefits—PM Mortality Derived from American Cancer Society Analysis and Six-Cities Analysis [b]			
Multi-city analyses	Bell et al., 2004	Total: $9.5–$21 PM: $7.7–$19 Ozone: $1.8	Total: $8.7–$19. PM: $7.0–$17. Ozone: $1.8.
	Huang et al., 2005	Total: $10–$21 PM: $7.7–$19 Ozone: $2.6	Total: $9.5–$20. PM: $7.0–$17. Ozone: $2.6.
	Schwartz, 2005	Total: $10–$22 PM: $7.7–$19 Ozone: $2.7	Total: $9.6–$20. PM: $7.0–$17. Ozone: $2.7.
Meta-analyses	Bell et al., 2005	Total: $13–$24 PM: $7.7–$19 Ozone: $5.5	Total: $12–$23. PM: $7.0–$17. Ozone: $5.5.
	Ito et al., 2005	Total: $15–$26 PM: $7.7–$19 Ozone: $7.5	Total: $15–$25. PM: $7.0–$17. Ozone: $7.5.
	Levy et al., 2005	Total: $15–$27 PM: $7.7–$19 Ozone: $7.7	Total: $15–$25. PM: $7.0–$17. Ozone: $7.7.

[a] Benefits presented in this table include California emission reductions from the LEV III program. Had we modeled the California LEV III emission impacts in the Tier 3 air quality baseline, we estimate that benefits would decrease by approximately 12–16 percent, depending on the particular health impact functions used to characterize both PM- and ozone-related premature mortality. We will account for emissions in states that have adopted California's LEV III program in the baseline air quality modeling for the final rule.

[b] Total includes premature mortality-related and morbidity-related ozone and $PM_{2.5}$ benefits. Range was developed by adding the estimate from the ozone premature mortality function to the estimate of $PM_{2.5}$-related premature mortality derived from either the ACS study (Pope et al., 2002) or the Six-Cities study (Laden et al., 2006).

[c] Note that total benefits presented here do not include a number of unquantified benefits categories. A detailed listing of unquantified health and welfare effects is provided in Table VIII–2.

[d] Results reflect the use of both a 3 and 7 percent discount rate, as recommended by EPA's Guidelines for Preparing Economic Analyses and OMB Circular A–4. Results are rounded to two significant digits for ease of presentation and computation. Totals may not sum due to rounding.

The benefits in Table VIII–1 include all of the human health impacts we are able to quantify and monetize at this time. However, the full complement of human health and welfare effects associated with PM and ozone remain unquantified because of current limitations in methods and/or available data. We have not quantified a number of known or suspected health effects linked with ozone and PM for which appropriate health impact functions are not available or which do not provide easily interpretable outcomes (e.g., changes in heart rate variability). Additionally, we are unable to quantify a number of known welfare effects, including reduced acid and particulate deposition damage to cultural monuments and other materials, and environmental benefits due to reductions of impacts of eutrophication in coastal areas. These are listed in Table VIII–2. As a result, the health benefits quantified in this section are likely underestimates of the total benefits attributable to the proposed standards.

[483] U.S. Environmental Protection Agency. (2012). *Regulatory Impact Analysis: Final Rulemaking for 2017–2025 Light-Duty Vehicle Greenhouse Gas Emission Standards and Corporate Average Fuel Economy Standards,* Assessment and Standards Division, Office of Transportation and Air Quality, EPA–420–R–12–016, August 2012. Available on the internet: *http://www.epa.gov/otaq/climate/documents/420r12016.pdf.*

[484] Information on BenMAP, including downloads of the software, can be found at *http://www.epa.gov/ttn/ecas/benmodels.html.*

[485] U.S. EPA (2012). National Ambient Air Quality Standards for Particulate Matter. *http://www.epa.gov/PM/2012/finalrule.pdf.*

TABLE VIII–2—UNQUANTIFIED AND NON-MONETIZED POTENTIAL EFFECTS

Pollutant/effects	Effects not included in analysis—changes in:
Ozone Health [a]	Chronic respiratory damage [b].
	Premature aging of the lungs [b].
	Non-asthma respiratory emergency room visits.
	Exposure to UVb (+/−) [e].
Ozone Welfare	Yields for:
	—commercial forests.
	—some fruits and vegetables.
	—non-commercial crops.
	Damage to urban ornamental plants.
	Impacts on recreational demand from damaged forest aesthetics.
	Ecosystem functions.
	Exposure to UVb (+/−) [e].
PM Health [c]	Premature mortality—short term exposures [d].
	Low birth weight.
	Pulmonary function.
	Chronic respiratory diseases other than chronic bronchitis.
	Non-asthma respiratory emergency room visits.
	Exposure to UVb (+/−) [e].
PM Welfare	Residential and recreational visibility in non-Class I areas.
	Soiling and materials damage.
	Damage to ecosystem functions.
	Exposure to UVb (+/−) [e].
Nitrogen and Sulfate Deposition Welfare	Commercial forests due to acidic sulfate and nitrate deposition.
	Commercial freshwater fishing due to acidic deposition.
	Recreation in terrestrial ecosystems due to acidic deposition.
	Existence values for currently healthy ecosystems.
	Commercial fishing, agriculture, and forests due to nitrogen deposition.
	Recreation in estuarine ecosystems due to nitrogen deposition.
	Ecosystem functions.
	Passive fertilization.
CO Health	Behavioral effects.
HC/Toxics Health [f]	Cancer (benzene, 1,3-butadiene, formaldehyde, acetaldehyde).
	Anemia (benzene).
	Disruption of production of blood components (benzene).
	Reduction in the number of blood platelets (benzene).
	Excessive bone marrow formation (benzene).
	Depression of lymphocyte counts (benzene).
	Reproductive and developmental effects (1,3-butadiene).
	Irritation of eyes and mucus membranes (formaldehyde).
	Respiratory irritation (formaldehyde).
	Asthma attacks in asthmatics (formaldehyde).
	Asthma-like symptoms in non-asthmatics (formaldehyde).
	Irritation of the eyes, skin, and respiratory tract (acetaldehyde).
	Upper respiratory tract irritation and congestion (acrolein).
HC/Toxics Welfare	Direct toxic effects to animals.
	Bioaccumulation in the food chain.
	Damage to ecosystem function.
	Odor.

[a] The public health impact of biological responses such as increased airway responsiveness to stimuli, inflammation in the lung, acute inflammation and respiratory cell damage, and increased susceptibility to respiratory infection are likely partially represented by our quantified endpoints.

[b] The public health impact of effects such as chronic respiratory damage and premature aging of the lungs may be partially represented by quantified endpoints such as hospital admissions or premature mortality, but a number of other related health impacts, such as doctor visits and decreased athletic performance, remain unquantified.

[c] In addition to primary economic endpoints, there are a number of biological responses that have been associated with PM health effects including morphological changes and altered host defense mechanisms. The public health impact of these biological responses may be partly represented by our quantified endpoints.

[d] While some of the effects of short-term exposures are likely to be captured in the estimates, there may be premature mortality due to short-term exposure to PM not captured in the cohort studies used in this analysis. However, the PM mortality results derived from the expert elicitation do take into account premature mortality effects of short term exposures.

[e] May result in benefits or disbenefits.

[f] Many of the key hydrocarbons related to this action are also hazardous air pollutants listed in the CAA.

While there would be impacts associated with air toxic pollutant emission changes that result from the proposed standards, we do not attempt to monetize those impacts (Section III presents the estimated emission reductions associated with the proposal). This is primarily because currently available tools and methods to assess air toxics risk from mobile sources at the national scale are not adequate for extrapolation to incidence estimations or benefits assessment. The best suite of tools and methods currently available for assessment at the national scale are those used in the National-Scale Air Toxics Assessment (NATA). The EPA Science Advisory Board specifically commented in their review of the 1996 NATA that these tools were not yet ready for use in a

national-scale benefits analysis, because they did not consider the full distribution of exposure and risk, or address sub-chronic health effects.[486] While EPA has since improved these tools, there remain critical limitations for estimating incidence and assessing benefits of reducing mobile source air toxics.

As part of the second prospective analysis of the benefits and costs of the Clean Air Act,[487] EPA conducted a case study analysis of the health effects associated with reducing exposure to benzene in Houston from implementation of the Clean Air Act. While reviewing the draft report, EPA's Advisory Council on Clean Air Compliance Analysis concluded that ''the challenges for assessing progress in health improvement as a result of reductions in emissions of hazardous air pollutants (HAPs) are daunting . . . due to a lack of exposure-response functions, uncertainties in emissions inventories and background levels, the difficulty of extrapolating risk estimates to low doses and the challenges of tracking health progress for diseases, such as cancer, that have long latency periods.'' [488] EPA continues to work to address these limitations; however, we did not have the methods and tools available for national-scale application in time for the analysis of the proposed standards.[489]

B. Quantified Human Health Impacts

Table VIII–3 and Table VIII–4 present the core estimates of annual $PM_{2.5}$ and ozone health impacts, respectively, in the 48 contiguous U.S. states associated with the proposed standards for 2030. For each endpoint presented in Table VIII–3 and Table VIII–4, we provide both the mean estimate and the 90 percent confidence interval.

Using EPA's preferred estimates, based on the American Cancer Society (ACS) and Six-Cities studies and no threshold assumption in the model of mortality, we estimate that the proposed standards would result in between 800 and 2,100 cases of avoided $PM_{2.5}$-related premature mortalities annually in 2030. A sensitivity analysis was also conducted to understand the impact of alternative concentration response functions suggested by experts in the field. When the range of expert opinion is used, we estimate between 270 and 2,700 fewer premature mortalities in 2030 (see Table 8.8 in the RIA that accompanies this action). For ozone-related premature mortality in 2030, we estimate a range of between 170 to 770 fewer premature mortalities.

TABLE VIII–3—ESTIMATED $PM_{2.5}$-RELATED HEALTH IMPACTS [a] [b]

Health effect	2030 Annual reduction in incidence (5th%–95th%ile)
Premature Mortality—Derived from epidemiology literature: [c]	
Adult, age 30+, ACS Cohort Study (Pope et al., 2002)	800 (310–1,300)
Adult, age 25+, Six-Cities Study (Laden et al., 2006)	2,100 (1,100–3,000)
Infant, age <1 year (Woodruff et al., 1997)	3 (0–8)
Chronic bronchitis (adult, age 26 and over)	560 (100–1,000)
Non-fatal myocardial infarction (adult, age 18 and over)	980 (360–1,600)
Hospital admissions—respiratory (all ages) [d]	160 (77–230)
Hospital admissions—cardiovascular (adults, age >18) [e]	380 (270–440)
Emergency room visits for asthma (age 18 years and younger)	600 (350–850)
Acute bronchitis, (children, age 8–12)	1,300 (0–2,500)
Lower respiratory symptoms (children, age 7–14)	16,000 (7,700–24,000)
Upper respiratory symptoms (asthmatic children, age 9–18)	12,000 (3,800–20,000)
Asthma exacerbation (asthmatic children, age 6–18)	27,000 (3,000–74,000)
Work loss days	100,000 (88,000–110,000)
Minor restricted activity days (adults age 18–65)	600,000 (500,000–690,000)

[a] Benefits presented in this table include California emission reductions from the LEV III program. We will account for emissions in states that have adopted California's LEV III program in the baseline air quality modeling for the final rule.
[b] Incidence is rounded to two significant digits. Estimates represent incidence within the 48 contiguous United States.
[c] PM-related adult mortality based upon the American Cancer Society (ACS) Cohort Study (Pope et al., 2002) and the Six-Cities Study (Laden et al., 2006). Note that these are two alternative estimates of adult mortality and should not be summed. PM-related infant mortality based upon a study by Woodruff, Grillo, and Schoendorf, (1997).[490]
[d] Respiratory hospital admissions for PM include admissions for chronic obstructive pulmonary disease (COPD), pneumonia and asthma.
[e] Cardiovascular hospital admissions for PM include total cardiovascular and subcategories for ischemic heart disease, dysrhythmias, and heart failure.

[486] Science Advisory Board. (2001). NATA—Evaluating the National-Scale Air Toxics Assessment for 1996—an SAB Advisory. *http://www.epa.gov/ttn/atw/sab/sabrev.html.*

[487] U.S. Environmental Protection Agency (U.S. EPA). (2011). *The Benefits and Costs of the Clean Air Act from 1990 to 2020.* Office of Air and Radiation, Washington, DC. March. Available on the Internet at <*http://www.epa.gov/air/sect812/feb11/fullreport.pdf*>.

[488] U.S. Environmental Protection Agency—Science Advisory Board (U.S. EPA–SAB). (2008). *Benefits of Reducing Benzene Emissions in Houston, 1990–2020.* EPA–COUNCIL–08–001. July. Available at <*http://yosemite.epa.gov/sab/sabproduct.nsf/D4D7EC9DAEDA8A5485257486007 28A83/$File/EPA-COUNCIL-08-001-unsigned.pdf*>.

[489] In April, 2009, EPA hosted a workshop on estimating the benefits or reducing hazardous air pollutants. This workshop built upon the work accomplished in the June 2000 Science Advisory Board/EPA Workshop on the Benefits of Reductions in Exposure to Hazardous Air Pollutants, which generated thoughtful discussion on approaches to estimating human health benefits from reductions in air toxics exposure, but no consensus was reached on methods that could be implemented in the near term for a broad selection of air toxics. Please visit *http://epa.gov/air/toxicair/2009workshop.html* for more information about the workshop and its associated materials.

[490] Woodruff, T.J., J. Grillo, and K.C. Schoendorf. (1997). The Relationship Between Selected Causes of Postneonatal Infant Mortality and Particulate Air Pollution in the United States. *Environmental Health Perspectives* 105(6):608–612.

TABLE VIII–4—ESTIMATED OZONE-RELATED HEALTH IMPACTS [a] [b]

Health effect	2030 Annual reduction in incidence (5th%–95th%ile)
Premature Mortality, All ages [c]	
Multi-City Analyses:	
Bell et al. (2004)—Non-accidental	170 (73–260)
Huang et al. (2005)—Cardiopulmonary	250 (120–380)
Schwartz (2005)—Non-accidental	260 (110–410)
Meta-analyses:	
Bell et al. (2005)—All cause	540 (300–780)
Ito et al. (2005)—Non-accidental	750 (500–1,000)
Levy et al. (2005)—All cause	770 (560–970)
Hospital admissions—respiratory causes (adult, 65 and older) [d]	1,200 (160–2,200)
Hospital admissions—respiratory causes (children, under 2)	550 (290–810)
Emergency room visit for asthma (all ages)	580 (0–1,500)
Minor restricted activity days (adults, age 18–65)	970,000 (490,000–1,500,000)
School absence days	350,000 (150,000–490,000)

[a] Benefits presented in this table include California emission reductions from the LEV III program. We will account for emissions in states that have adopted California's LEV III program in the baseline air quality modeling for the final rule.
[b] Incidence is rounded to two significant digits. Estimates represent incidence within the 48 contiguous U.S.
[c] Estimates of ozone-related premature mortality are based upon incidence estimates derived from several alternative studies: Bell et al. (2004); Huang et al. (2005); Schwartz (2005); Bell et al. (2005); Ito et al. (2005); Levy et al. (2005). The estimates of ozone-related premature mortality should therefore not be summed.
[d] Respiratory hospital admissions for ozone include admissions for all respiratory causes and subcategories for COPD and pneumonia.

C. Monetized Benefits

Table VIII–5 presents the estimated monetary value of changes in the incidence of ozone and $PM_{2.5}$-related health effects. All monetized estimates are stated in 2010$. These estimates account for growth in real gross domestic product (GDP) per capita between the present and 2030. Our estimate of total monetized benefits in 2030 for the program, using the ACS and Six-Cities PM mortality studies and the range of ozone mortality assumptions, is $9.5 and $27 billion, assuming a 3 percent discount rate, or between $8.7 and $25 billion, assuming a 7 percent discount rate. This represents the health benefits of the Tier 3 program anticipated to occur annually when the program is fully implemented and most of the fleet turned over.

TABLE VIII–5—ESTIMATED MONETARY VALUE OF CHANGES IN INCIDENCE OF HEALTH AND WELFARE EFFECTS IN 2030

[Millions of 2010$] [a] [b]

Health endpoints	2030 (5th and 95th percentile)
$PM_{2.5}$-Related Health Effects	
Premature Mortality—Derived from Epidemiology Studies: [c] [d]	
Adult, age 30+—ACS study (Pope et al., 2002):	
3% discount rate	$7,200 ($920–$18,000)
7% discount rate	$6,500 ($830—$17,000)
Adult, age 25+—Six-Cities study (Laden et al., 2006):	
3% discount rate	$18,000 ($2,600–$45,000)
7% discount rate	$17,000 ($2,300–$41,000)
Infant Mortality, <1 year—(Woodruff et al. 1997)	$27 ($0–$100)
Chronic bronchitis (adults, 26 and over)	$310 ($25–$1,000)
Non-fatal acute myocardial infarctions:	
3% discount rate	$110 ($24–$260)
7% discount rate	$90 ($19–$210)
Hospital admissions for respiratory causes	$2.5 ($1.2–$3.6)
Hospital admissions for cardiovascular causes	$5.5 ($1.2–$10)
Emergency room visits for asthma	$0.24 ($0.13–$0.36)
Acute bronchitis (children, age 8–12)	$0.61 ($0.00–$1.5)
Lower respiratory symptoms (children, 7–14)	$0.34 ($0.13–$0.63)
Upper respiratory symptoms (asthma, 9–11)	$0.40 ($0.12–$0.89)
Asthma exacerbations	$1.6 ($0.17–$4.4)
Work loss days	$16 ($14–$19)
Minor restricted-activity days (MRADs)	$41 ($24–$59)
Ozone-Related Health Effects	
Premature Mortality, All ages—Derived from Multi-city analyses:	
Bell et al., 2004	$1,700 ($220–$4,200)
Huang et al., 2005	$2,500 ($340–$6,200)
Schwartz, 2005	$2,600 ($330–$6,500)
Premature Mortality, All ages—Derived from Meta-analyses:	
Bell et al., 2005	$5,400 ($760–$13,000)
Ito et al., 2005	$7,400 ($1,100–$18,000)

TABLE VIII–5—ESTIMATED MONETARY VALUE OF CHANGES IN INCIDENCE OF HEALTH AND WELFARE EFFECTS IN 2030—Continued

[Millions of 2010$] [a b]

Health endpoints	2030 (5th and 95th percentile)
Levy et al., 2005	$7,600 ($1,100–$18,000)
Hospital admissions—respiratory causes (adult, 65 and older)	$32 ($4.2–$56)
Hospital admissions—respiratory causes (children, under 2)	$6.0 ($3.1–$8.9)
Emergency room visit for asthma (all ages)	$0.23 ($0.0–$0.57)
Minor restricted activity days (adults, age 18–65)	$67 ($31–$110)
School absence days	$34 ($15–$48)

[a] Benefits presented in this table include California emission reductions from the LEV III program. We will account for emissions in states that have adopted California's LEV III program in the baseline air quality modeling for the final rule.
[b] Monetary benefits are rounded to two significant digits for ease of presentation and computation. PM and ozone benefits are nationwide.
[c] Monetary benefits adjusted to account for growth in real GDP per capita between 1990 and the analysis year (2030).
[d] Valuation assumes discounting over the SAB recommended 20 year segmented lag structure. Results reflect the use of 3 percent and 7 percent discount rates consistent with EPA and OMB guidelines for preparing economic analyses.

D. What are the limitations of the benefits analysis?

Every benefit-cost analysis examining the potential effects of a change in environmental protection requirements is limited to some extent by data gaps, limitations in model capabilities (such as geographic coverage), and uncertainties in the underlying scientific and economic studies used to configure the benefit and cost models. Limitations of the scientific literature often result in the inability to estimate quantitative changes in health and environmental effects, such as potential decreases in premature mortality associated with decreased exposure to carbon monoxide. Deficiencies in the economics literature often result in the inability to assign economic values even to those health and environmental outcomes which can be quantified. These general uncertainties in the underlying scientific and economics literature, which can lead to valuations that are higher or lower, are discussed in detail in the draft RIA and its supporting references. Key uncertainties that have a bearing on the results of the benefit-cost analysis of the proposed standards include the following:

- The exclusion of potentially significant and unquantified benefit categories (such as health, odor, and ecological benefits of reduction in air toxics, ozone, and PM);
- Errors in measurement and projection for variables such as population growth;
- Uncertainties in the estimation of future year emissions inventories and air quality (including future year climate uncertainty);
- Uncertainty in the estimated relationships of health and welfare effects to changes in pollutant concentrations including the shape of the concentration-response function, the size of the effect estimates, and the relative toxicity of the many components of the PM mixture;
- Uncertainties in exposure estimation; and
- Uncertainties associated with the effect of potential future actions to limit emissions.

As Table VIII–5 indicates, total benefits are driven primarily by the reduction in premature mortalities each year. Some key assumptions underlying the premature mortality estimates include the following, which may also contribute to uncertainty:

- Inhalation of fine particles is causally associated with premature death at concentrations near those experienced by most Americans on a daily basis. Although biological mechanisms for this effect have not yet been completely established, the weight of the available epidemiological, toxicological, and experimental evidence supports an assumption of causality. The impacts of including a probabilistic representation of causality were explored in the expert elicitation-based results of the PM NAAQS RIA.[491]
- All fine particles, regardless of their chemical composition, are equally potent in causing premature mortality. This is an important assumption, because PM produced via transported precursors emitted from vehicle engines may differ significantly from PM precursors released from electric generating units and other industrial sources. However, no clear scientific grounds exist for supporting differential effects estimates by particle type.
- The C–R function for fine particles is approximately linear within the range of ambient concentrations under consideration. Thus, the estimates include health benefits from reducing fine particles in areas with varied concentrations of PM, including both regions that may be in attainment with $PM_{2.5}$ standards and those that are at risk of not meeting the standards.
- There is uncertainty in the magnitude of the association between ozone and premature mortality. The range of ozone benefits associated with the coordinated strategy is estimated based on the risk of several sources of ozone-related mortality effect estimates. In a report on the estimation of ozone-related premature mortality published by the National Research Council, a panel of experts and reviewers concluded that short-term exposure to ambient ozone is likely to contribute to premature deaths and that ozone-related mortality should be included in estimates of the health benefits of reducing ozone exposure.[492] EPA has requested advice from the National Academy of Sciences on how best to quantify uncertainty in the relationship between ozone exposure and premature mortality in the context of quantifying benefits.

Despite the uncertainties described above, we believe this analysis provides a conservative estimate of the estimated criteria pollutant-related health and environmental benefits of the standards in future years because of the exclusion of potentially significant benefit categories that are not quantifiable at this time. Acknowledging benefits omissions and uncertainties, we present a best estimate of the total benefits based on our interpretation of the best available scientific literature and methods supported by EPA's technical peer review panel, the Science Advisory

[491] U.S. Environmental Protection Agency. (2006). *Final Regulatory Impact Analysis (RIA) for the Proposed National Ambient Air Quality Standards for Particulate Matter.* Prepared by: Office of Air and Radiation. Retrieved March, 26, 2009 at *http://www.epa.gov/ttn/ecas/ria.html*

[492] National Research Council (NRC), (2008). Estimating Mortality Risk Reduction and Economic Benefits from Controlling Ozone Air Pollution. The National Academies Press: Washington, DC.

Board's Health Effects Subcommittee (SAB–HES). The National Academies of Science (NRC, 2002) has also reviewed EPA's methodology for analyzing the health benefits of measures taken to reduce air pollution. EPA addressed many of these comments in the analysis of the final PM NAAQS.[493] [494] This analysis incorporates this work to the extent possible.

E. Illustrative Analysis of Monetized Impacts Associated With the Proposal in 2017

For illustrative purposes, this section presents the total estimated monetized benefits associated with the proposed standards in 2017. As presented in Section III.B, the emissions impacts of the proposed standards in 2017 are primarily due to the effects of sulfur on the existing (pre-Tier 3) fleet. For reasons explained in Chapter 7.1.3.2.2 of the draft RIA, our analysis of the air quality impacts in 2017 reflects an increase in direct PM emissions from vehicles (along with reductions in NO_X, VOCs and other pollutants). This emissions increase results from a series of conservative assumptions and uncertainties related to fuel parameters in 2017, and is not expected to occur in reality. Because our air quality modeling assumes this increase, as well as increased direct PM emissions due to an emissions processing error (see Chapter 7.2.1.1.2 of the draft RIA), our illustrative benefits analysis in 2017 overestimates ambient concentrations of $PM_{2.5}$ and underestimates the benefits of the proposed Tier 3 standards.

Table VIII–6 presents total aggregate monetized benefits of the program in 2017, which includes the modeled direct PM increase described above. Monetized estimates are presented in 2010$. Our estimate of total monetized benefits associated with the proposed standards in 2017, using the ACS and Six-Cities PM mortality studies and the range of ozone mortality assumptions, is between $1.0 and $3.4 billion, assuming a 3 percent discount rate, or between $1.0 and $3.3 billion, assuming a 7 percent discount rate. Had our ambient air quality modeling of $PM_{2.5}$ not included the increase in direct PM emissions, we estimate that benefits would increase by a range of $400 to $970 million (assuming a 3 percent discount rate) or increase by a range of $360 to $880 million (assuming a 7 percent discount rate), using current EPA benefit-per-ton estimates for direct PM.[495]

For a more detailed presentation of the quantified and monetized impacts of the proposal in 2017, please refer to Chapter 8 of the RIA that accompanies this preamble.

TABLE VIII–6—TOTAL MONETIZED OZONE AND PM-RELATED BENEFITS ASSOCIATED WITH THE PROPOSED PROGRAM IN 2017

Total Ozone and PM Benefits (billions, 2010$)—PM mortality derived from the ACS and six-cities studies

3% Discount rate			7% Discount rate		
Ozone mortality function	Reference	Mean total benefits	Ozone mortality function	Reference	Mean total benefits
Multi-city	Bell et al., 2004	$1.0–$1.8	Multi-city	Bell et al., 2004	$0.96–$1.7
	Huang et al., 2005	1.2–1.9		Huang et al., 2005	1.2–1.9
	Schwartz, 2005	1.3–2.0		Schwartz, 2005	1.2–1.9
Meta-analysis	Bell et al., 2005	2.1–2.8	Meta-analysis	Bell et al., 2005	2.0–2.7
	Ito et al., 2005	2.6–3.4		Ito et al., 2005	2.6–3.3
	Levy et al., 2005	2.7–3.4		Levy et al., 2005	2.6–3.3

Total Ozone and PM Benefits (billions, 2010$)—PM mortality derived from expert elicitation (lowest and highest estimate)

3% Discount rate			7% Discount rate		
Ozone mortality function	Reference	Mean total benefits	Ozone mortality function	Reference	Mean total benefits
Multi-city	Bell et al., 2004	$0.68–$3.8	Multi-city	Bell et al., 2004	$0.67–$2.0
	Huang et al., 2005	0.89–2.4		Huang et al., 2005	0.87–2.2
	Schwartz, 2005	0.93–2.4		Schwartz, 2005	0.91–2.3
Meta-analysis	Bell et al., 2005	1.7–3.2	Meta-analysis	Bell et al., 2005	1.7–3.1
	Ito et al., 2005	2.3–3.8		Ito et al., 2005	2.3–3.6
	Levy et al., 2005	2.3–3.8		Levy et al., 2005	2.3–3.7

IX. Alternatives Analysis

As described throughout this preamble, we have considered a number of regulatory alternatives in the development of this proposal, including alternatives related to timing and stringency of the proposed standards, as well as program design (e.g., averaging, banking, and trading). This section summarizes the alternatives considered for both vehicle emission and fuel standards.

A. Vehicle Emission Standards

The federal vehicle emission standards we are proposing are the most stringent feasible considering anticipated developments in motor vehicle emissions control technology.

[493] National Research Council (NRC). (2002). Estimating the Public Health Benefits of Proposed Air Pollution Regulations. The National Academies Press: Washington, DC.

[494] U.S. Environmental Protection Agency. (2006). *Final Regulatory Impact Analysis (RIA) for the Proposed National Ambient Air Quality Standards for Particulate Matter.* Prepared by: Office of Air and Radiation. Available at *http://www.epa.gov/ttn/ecas/ria.html.*

[495] The $PM_{2.5}$-related benefit-per-ton estimates provide the total monetized human health benefits (the sum of premature mortality and premature morbidity) of reducing one ton of directly emitted $PM_{2.5}$. The benefit per-ton technique has been used in previous analyses, including the 2012–2016 Light-Duty Greenhouse Gas Rule (U.S. EPA, 2010. Regulatory Impact Analysis, Final Rulemaking to Establish Light-Duty Vehicle Greenhouse Gas Emission Standards and Corporate Average Fuel Economy Standards. Office of Transportation and Air Quality. April. Available at *http://www.epa.gov/otaq/climate/regulations/420r10009.pdf.* EPA–420-R-10-009). The benefits-per-ton values are available at *http://www.epa.gov/oaqps001/benmap/bpt.html.* Note that the values on the Web site are presented in year 2006$; the values underlying the estimates here have been adjusted to 2010$ using the CPI–U ''all'' index.

As we considered options for these vehicle standards, one of the important factors we considered was harmonization with the CARB LEV III program. As a result, consideration of alternatives focused less on the level of the per-vehicle standards themselves and more on the phase-in schedule for the standards, which can have an important influence on the cost of the standards. Phase-in schedules directly impact costs depending on how they are aligned with other light-duty rules and product design cycles. In addition, phase-in schedules can impact the cost of available resources, specifically design, development and testing resources within vehicle manufacturers and emission control suppliers.

1. Shorter NMOG+NO_X Standard Phase-in

We originally considered requiring full implementation of the final NMOG+NO_X final fleet average standard by MY 2022. However, we determined that this would have disrupted the manufacturer's normal product design cycles,[496] and it would not have allowed manufacturers to use a consistent product design cycle for both the Tier 3 standards and the 2017 LD GHG standards, which reach full implementation in MY 2025. We are proposing to extend the phase-in schedule to MY 2025 in order to allow vehicle manufacturers to better integrate the compliance with Tier 3 into their product design cycles, as well as take advantage of additional learning to reduce costs. We believe this implementation schedule for the Tier 3 NMOG+NO_X standards would allow us to achieve the environmental objectives without imposing unnecessary cost and burden on the industry.

2. Longer NMOG+NO_X Standards Phase-In Due to Early Credits

In an effort to facilitate the step-down in fleet average stringency in the initial model years of the Tier 3 program, we considered allowing manufacturers to earn credits against the current Tier 2 Bin 5 fleet average and use earned early credits without any limits for the first five years of the Tier 3 program. CARB, along with some vehicle manufacturers, noted that if a manufacturer were to substantially over comply with the Tier 2 Bin 5 fleet average, these early credits might not only delay achievement of the Tier 3 emission levels, but also delay harmonization between the Tier 3 and LEV III programs for many years. To address this potential misalignment, we are proposing that the application of the early credits be capped starting in MY 2018 at a manufacturer's LEV III credits adjusted by the ratio of California and Section 177 state sales to federal sales. (See Section IV.A.7.a for more details.) This proposed approach would balance the need for some transition flexibility to avoid unnecessary costs, while still ensuring expeditious harmonization with LEV III and achievement of the environmental benefits of the Tier 3 standards.

3. Shorter PM Standards Phase-In

As we considered potential PM phase-in schedules, we gave strong consideration to manufacturers' PM testing capabilities and product design cycles. We considered requiring manufacturers to certify 25 percent of their fleet to the Tier 3 p.m. standards in MY 2017, ramping up to 100 percent by MY 2020. We initially believed that this schedule would allow manufacturers to focus engineering resources on ensuring their new products meet the proposed Tier 3 standards while other product lines, which we expect would be phased out due to the 2017 LD GHG standards, expire. However, based on further discussions with the vehicle manufacturers, we recognized that they need time to improve and expand their facilities to measure PM, not only for compliance determination but also for product development work prior to production. As a result, we are proposing a phase-in schedule for meeting the proposed Tier 3 p.m. standards that starts with 20 percent of the vehicles at or below 6000 lbs GVWR in MY 2017 and ramps up to 100 percent of the light-duty fleet in MY 2021. As with the NMOG+NO_X phase-in discussed above, we believe this proposed phase-in schedule for the Tier 3 p.m. standards would allow us to achieve the environmental objectives without imposing unnecessary cost and burden on the industry.

4. NMOG+NO_X Standards

We believe that the fleet-average NMOG+NO_X standards that we are proposing reflect the greatest degree of emission reduction achievable considering cost and technology, assuming that gasoline sulfur levels are reduced to the proposed 10-ppm average. We also believe the proposed implementation schedule for the NMOG+ NO_X standards is as short as practicable, as explained above. As a result, we believe more stringent standards would not be justified based on the information currently available to EPA. Therefore, given our goal to harmonize our program with CARB's at the 30 mg/mi level, we did not conduct any detailed analysis of a less stringent fleet average standard. Based on the work done to quantify the impacts of the 30 mg/mi standard, however, we can say that a fleet-average standard of 50 mg/mi of NMOG+NO_X would result in NMOG+NO_X emissions in 2030 that are about 100,000 tons higher than the standards we are proposing. While costs would be lower because the emissions controls discussed in Section VII.A would be applied at a lower rate, such a standard would also not be harmonized with CARB LEV III standards.

5. PM Standards

The FTP PM standards that we are proposing are the most stringent technically feasible standards within the implementation timeframe of this proposal. Although CARB has finalized a 1 mg/mi standard which will begin phasing in with MY 2025, they acknowledge that there is a need for continuing PM measurement method development prior to implementing this standard.[497] The EPA believes that in order to propose a federal PM standard at this level, there should be established methods to reliably and consistently measure PM at levels at and below that standard that would be needed for ensuring compliance.

B. Fuel Sulfur Standards

As explained in Section V.A.2., we believe that a 10-ppm annual average standard is sufficient to enable the vehicle fleet to meet the proposed Tier 3 standards and appropriately balances feasibility with costs. Other countries and California have also reduced the sulfur content of their gasoline; California's gasoline is already meeting our proposed 10-ppm average sulfur level, and Europe and Japan have a cap on the sulfur content of gasoline at 10 ppm. Because vehicle emission performance improves as sulfur is reduced, we considered imposing a 10-ppm cap (i.e., no averaging, banking and trading), as well as lowering gasoline sulfur content below the 10-ppm average (see Section V.A.6).

We considered expressing the standard as a cap similar to the standard in Europe and Japan. However, by allowing averaging to meet 10-ppm, we believe that the most challenged refiners would be able to avoid what could be

[496] A light-duty vehicle product design cycle is the number of years between major redesigns of a vehicle. Typically, major redesigns are completed every 5 to 6 years.

[497] California Air Resources Board (CARB) Initial Statement of Reasons, Public Hearing to Consider LEV III, December 7, 2011.

cost-prohibitive investments, while still meeting 10 ppm across the fuel pool. As discussed in Section VII.B., we estimate that allowing averaging would reduce nationwide control costs by nearly 10 percent, and would still be sufficient to enable vehicles to meet the proposed Tier 3 standards.

We also considered an even lower sulfur standard of 5 ppm. Based upon the results of our test programs and associated modeling, a sulfur standard of 5 ppm could reduce VOC+NO_X emissions from the existing fleet by an additional 80,000 tons in 2017.

However, we believe a 5 ppm standard would significantly increase both capital and operating costs. Such a standard would require: (1) More severe treatment of FCC gasoline; (2) more overcapacity and storage for reprocessing of off-specification product; (3) treatment of additional (non-FCC) gasoline blendstocks; (4) essentially all refineries to reduce sulfur to 5 ppm, thereby eliminating much of the benefit of the ABT provisions, and (5) controlling the contribution to gasoline sulfur from gasoline additives, transmix, ethanol denaturants, and contamination in the distribution system.

In our analysis of the 10-ppm average standard and refineries that might reduce sulfur to 5 ppm in order to generate credits, we estimated that the sulfur control costs to achieve 5 ppm would be more than 50 percent greater than for our proposed 10-ppm standard. This is more than twice as high on a cost per ppm-gallon basis. Additionally, as explained earlier, a 5 ppm standard would likely result in the elimination of the ability for refineries to trade credits. Without a viable trading program it could become prohibitively expensive for the more challenged refineries to comply, creating a financial hardship situation. Because the costs and other economic impacts rise dramatically as sulfur is reduced below 10 ppm, we believe that a 10-ppm sulfur standard is the most stringent feasible standard considering technology and cost.

In addition to lower average sulfur standards, we are also considering lower per-gallon cap standards, which are currently set under the Tier 2 program at 80 ppm sulfur at the refinery gate and 95 ppm sulfur downstream. As discussed in Section V.A.3., in addition to proposing that these cap standards be maintained, we are co-proposing lowering them to 50 ppm and 65 ppm respectively. Given the stringency of the 10-ppm average standard, we do not anticipate that this would have a meaningful impact on either program costs or emission reductions. However, it would provide added assurance that individual vehicles would not be exposed to higher sulfur levels and the resulting impacts on emissions. Vehicle manufacturers have expressed concern that such exposure could impact not only individual vehicle emissions, but also vehicle operation, due to interference with sensors and feedback controls. To further address concerns of vehicle manufacturers, we are also requesting comment on the potential implementation of a refinery gate sulfur cap as low as 20 ppm and a downstream sulfur cap as low as 25 ppm. This would further constrain downstream contamination and limit the temporary exposure of vehicles in-use to sulfur levels that would significantly degrade their emission performance.

X. Economic Impact Analysis

A. Introduction

The proposed rule would affect two sectors directly: Vehicle manufacturing and petroleum refining. For these two regulated sectors, the economic impact analysis discusses the market impacts from the proposed rule, the changes in price and quantity sold. In addition, although analysis of employment impacts is not part of a benefit-cost analysis (except to the extent that labor costs contribute to costs), employment impacts of federal rules are of particular concern in the current economic climate of sizeable unemployment. The recently issued Executive Order 13563, ''Improving Regulation and Regulatory Review'' (January 18, 2011), states, ''Our regulatory system must protect public health, welfare, safety, and our environment while promoting economic growth, innovation, competitiveness, and *job creation*'' (emphasis added). For this reason, we are examining the effects of this proposal on employment in the regulated sectors.

B. Vehicle Sales Impacts

This rule takes effect from MY 2017–2025. In the intervening years, it is possible that the assumptions underlying a quantitative analysis, as well as market conditions, might change. For this reason, we present a qualitative discussion of the effects on vehicle sales of the proposed standards at the aggregate market level. Vehicle manufacturers are expected to comply with the proposed standards primarily through technological changes to vehicles. These changes to vehicle design and manufacturing are expected to increase manufacturers' costs of vehicle production.

Section VII.A estimates the increase in vehicle costs due to the proposed standards. These costs differ across years and range from $71 to $102 for cars, $93 to $150 for trucks and $36 to $59 for Class 2b/3 vehicles (see Section VII.A). These costs are small relative to the cost of a vehicle. In a fully competitive industry, these costs would be entirely passed through to consumers. However in an oligopolistic industry such as the automotive sector, these increases in cost may not fully pass through to the purchase price, and the consumers may face an increase in price that is less than the increased manufacturers' costs of vehicle production.[498] We do not quantify the expected level of cost pass-through or the ultimate vehicle price increase consumers are expected to face, apart from noting that prices are expected to increase by an amount up to the increased manufacturers' costs.

This increase in price is expected to lower the quantity of vehicles sold. Given that we expect that vehicle prices will not change by more than the cost increase, we expect that the decrease in vehicle sales will be negligible.

The effect of this rule on the use and scrappage of older vehicles would be related to its effects on new vehicle prices and the total sales of new vehicles. The increase in price is likely to cause the ''turnover'' of the vehicle fleet (i.e., the retirement of used vehicles and their replacement by new models) to slow slightly, thus reducing the anticipated effect of the rule on fleet-wide emissions. Because we do not estimate the effect of the rule on new vehicle price changes nor do we have a good estimate of the effect of new vehicle price changes on vehicle turnover, we have not attempted to estimate explicitly the effects of the rule on scrappage of older vehicles and the turnover of the vehicle fleet.

C. Impacts on Petroleum Refinery Sector Production

The key change for refiners from the proposed standards would be more stringent sulfur requirements. This change to fuels is expected to increase manufacturers' costs of gasoline production by about 0.9 cents per gallon (see Section VII.B).

In a perfectly competitive industry, this cost would be passed along

[498] See, for instance, Gron, A., and Swenson, D. (2000). Cost Pass-Through in the U.S. Automobile Market. *Review of Economics and Statistics* 82, 316–324 () who found significantly less than full-cost pass-through using data from 1984–1994. Using full-cost pass-through overstates costs and thus contributes to lower vehicle sales than using a lower estimate. To the extent that the auto industry has become more competitive over time, full-cost pass-through may be more appropriate than a result based on this older study.

completely to consumers. In an imperfectly competitive industry, as noted above, full cost pass-through is not necessary: Firms may choose to reduce impacts on sales by not passing along full costs. In 2004, the Federal Trade Commission reported that ''concentration for most levels of the petroleum industry has remained low to moderate.'' [499] Thus the assumption of competitive markets has some foundation in this industry. We do not estimate the price increase that consumers are likely to face, though we note that it should be positive and up to the increase in manufacturers' costs of gasoline production.

The effect of higher gasoline prices on gasoline sales is expected to be different over the short and long term. In the long run, in response to the increase in fuel costs, consumers can more easily change their driving habits, including where they live or what vehicles they use. Because of this, we expect that gasoline sales will decrease more in the long run compared to the short run as a result of the price increase due to the proposed rule. However, because manufacturers' costs are expected to increase less than one cent per gallon, we expect that the decrease in gasoline sales will be negligible over all time horizons.

D. Employment Impacts

This section discusses changes in employment due to the proposed rule. We focus on the auto manufacturing sector and the refinery sector because they are directly regulated, and because they are likely to bear a substantial share of changes in employment due to this proposed rule. We partially quantify impacts in the auto sector, providing a mix of qualitative and quantitative discussion, following the methods used in the Final Rulemaking for 2017–2025 Model Year Light-Duty Vehicle Greenhouse Gas Emissions and Corporate Average Fuel Economy Standards.[500] For the refinery sector we provide a qualitative analysis. We also include discussion of effects on the motor vehicle parts manufacturing sector because the auto manufacturing sector can either produce parts internally or buy them from an external supplier, and we do not have estimates of the likely breakdown of effort between the two sectors. For the same reasons, we discuss effects on producers of equipment that refiners would use to comply with the proposed standards.

When the economy is at full employment, an environmental regulation is unlikely to have much impact on net overall U.S. employment; instead, labor would primarily be shifted from one sector to another. These shifts in employment impose an opportunity cost on society, approximated by the wages of the employees, as regulation diverts workers from other activities in the economy. In this situation, any effects on net employment are likely to be transitory as workers change jobs (e.g., some workers may need to be retrained or require time to search for new jobs, while shortages in some sectors or regions could bid up wages to attract workers).

On the other hand, if a regulation comes into effect during a period of high unemployment, a change in labor demand due to regulation may affect net overall U.S. employment because the labor market is not in equilibrium. Schmalansee and Stavins point out that net positive employment effects are possible in the near term when the economy is at less than full employment due to the potential hiring of idle labor resources by the regulated sector to meet new requirements (e.g., to install new equipment) and new economic activity in sectors related to the regulated sector.[501] In the longer run, the net effect on employment is more difficult to predict and will depend on the way in which the related industries respond to the regulatory requirements. As Schmalansee and Stavins note, it is possible that the magnitude of the effect on employment could vary over time, region, and sector, and positive effects on employment in some regions or sectors could be offset by negative effects in other regions or sectors. For this reason, they urge caution in reporting partial employment effects since it can ''paint an inaccurate picture of net employment impacts if not placed in the broader economic context.''

We follow the theoretical structure proposed in a study by Morgenstern, Pizer, and Shih (2002) [502] of the impacts of regulation in employment in the regulated sectors. In particular, Morgenstern et al. (2002) identify three separate ways that employment levels may change in the regulated industry in response to a new or more stringent regulation.

- Demand effect: Higher production costs due to the regulation will lead to higher market prices; higher prices in turn reduce demand for the good, reducing the demand for labor to make that good. In the authors' words, the ''extent of this effect depends on the cost increase passed on to consumers as well as the demand elasticity of industry output.''
- Cost effect: As costs go up, plants add more capital and labor (holding other factors constant), with potentially positive effects on employment; in the authors' words, as ''production costs rise, more inputs, including labor, are used to produce the same amount of output.''
- Factor-shift effect: Post-regulation production technologies may be more or less labor-intensive (i.e., more/less labor is required per dollar of output). In the authors' words, ''environmental activities may be more labor intensive than conventional production,'' meaning that ''the amount of labor per dollar of output will rise,'' though it is also possible that ''cleaner operations could involve automation and less employment, for example.''

The authors note that the demand effect is expected to have a negative effect on employment, the cost effect to have a positive effect on employment, and the factor-shift effect to have an ambiguous effect on employment.

Morgenstern et al. (2002) estimated the effects on employment of spending on pollution abatement for four highly polluting/regulated industries (pulp and paper, plastics, steel, and petroleum refining) using data for six years between 1979 and 1991. They concluded that increased abatement expenditures generally have not caused a significant change in employment in those sectors. More specifically, their results showed that, on average across the industries studied, each additional $1 million (1987$) spent on pollution abatement resulted in a (statistically insignificant) net increase of 1.5 jobs. In the petroleum refining industry in particular, they found statistically significant and positive cost and factor shift effects and an insignificant demand effect, for a net (statistically significant) increase of 2.17 jobs per $1 million (1987$).

1. Employment Impacts in the Auto Sector

Following the Morgenstern et al. (2002) framework, we consider three effects for the auto sector: The demand

[499] Federal Trade Commission, Bureau of Economics. (2004). *The Petroleum Industry: Mergers, Structural Change, and Antitrust Enforcement.* Retrieved August 16, 2011 from Federal Trade Commission Web site: *http://www.ftc.gov/os/2004/08/040813mergersinpetrolberpt.pdf.*

[500] 77 FR 62623 (October 15, 2012).

[501] Schmalensee, R., & Stavins, R. (2011). *A Guide to Economic and Policy Analysis of EPA's Transport Rule*'' White paper commissioned by Excelon Corporation ().

[502] Morgenstern, R., Pizer, W., & Shih, J. (2002). Jobs Versus the Environment: An Industry-Level Perspective. *Journal of Environmental Economics and Management* 43, 412–436.

effect, the cost effect, and the factor shift effect.

a. The Demand Effect

The demand effect depends on the effects of this proposal on vehicle sales. If vehicle sales decrease, employment associated with these activities would decrease. As discussed in Section X.B, we do not make a quantitative estimate on the effect of the proposed rule on vehicle sales but we note that the decrease in vehicle sales is expected to be negligible. Thus we expect any decrease in employment in the auto sector through the demand effect to be small as well.

b. The Cost Effect

The demand effect, above, measures the effect due to new vehicle sales only. The cost effect measures the impacts due to the changes in technologies for vehicles that would have been sold in the absence of the rule. We estimate the cost effect by multiplying the ratio of workers to each $1 million of expenditures in the auto sector by the cost estimates for complying with the rule.

Some of the costs of this proposal would be spent directly in the auto manufacturing sector, but it is also likely that some of the costs would be spent in the auto parts manufacturing sector. We separately present the ratios for both the auto manufacturing sector and the auto parts manufacturing sector.

There are several public sources for estimates of employment per $1 million expenditures. The U.S. Bureau of Labor Statistics (BLS) provides its Employment Requirements Matrix (ERM),[503] which provides direct estimates of the employment per $1 million in sales of goods in 202 sectors. The values considered here are for Motor Vehicle Manufacturing (NAICS 3361) and Motor Vehicle Parts Manufacturing (NAICS 3363).

The Census Bureau provides both the Annual Survey of Manufactures [504] (ASM) and the Economic Census. The ASM is a subset of the Economic Census, based on a sample of establishments; though the Census itself is more complete, it is conducted only every 5 years, while the ASM is annual. Both include more sectoral detail than the BLS ERM: For instance, while the ERM includes the Motor Vehicle Manufacturing sector, the ASM and Economic Census have detail at the 6-digit NAICS code level (e.g., light truck and utility vehicle manufacturing). While the ERM provides direct estimates of employees/$1 million in expenditures, the ASM and Economic Census separately provide number of employees and value of shipments; the direct employment estimates here are the ratio of those values. The values reported are for Motor Vehicle Manufacturing (NAICS 3361), Automobile and Light Duty Motor Vehicle Manufacturing (NAICS 33611), and Motor Vehicle Parts Manufacturing (NAICS 3363).

For the cost effect, we use estimates from the Bureau of Labor Statistics and the Census Bureau of the number of workers per $1 million of expenditures in the sectors. The use of these ratios has both advantages and limitations. It is often possible to estimate these ratios for quite specific sectors of the economy: For instance, it is possible to estimate the average number of workers in the light-duty vehicle manufacturing sector per $1 million spent in the sector, rather than use the ratio from another, more aggregated sector, such as motor vehicle manufacturing. As a result, it is not necessary to extrapolate employment ratios from possibly unrelated sectors. On the other hand, these estimates are averages for the sectors, covering all the activities in those sectors; they may not be representative of the labor required when expenditures are required on specific activities, as the factor-shift effect indicates. For instance, the ratio for the motor vehicle manufacturing sector represents the ratio for all vehicle manufacturing, not just for emissions reductions. In addition, these estimates do not include changes in sectors that supply these sectors, such as steel or electronics producers. They thus may best be viewed as the effects on employment in the specific sectors due to the changes in expenditures in those sectors, rather than as an assessment of all employment changes due to these changes in expenditures.

The values used here are adjusted to remove the employment effects of imports through use of a ratio of domestic production to domestic sales of 0.667.[505] As discussed in the draft RIA, trends in the BLS ERM are used to estimate productivity improvements over time that are used to adjust these ratios over time.

Table X–1 provides estimates of the cost effect of this rule on employment. Chapter 2.1 of the draft RIA discusses the vehicle cost estimates developed for this rule, discussed in Section VII.A, presented in the second column. The maximum value for employment impacts per $1 million (before adjustments for changes in productivity, after accounting for the share of domestic production) is 1.809 if all the additional costs are in the parts sector; the minimum value is 0.402, if all the additional costs are in the light-duty vehicle manufacturing sector. Increased costs of vehicles and parts would, by itself, be expected to increase employment between 2017 and 2025 by somewhere between a few hundred to a few thousand jobs.

While we estimate employment impacts, measured in job-years, beginning with program implementation, some of these employment gains may occur earlier as auto manufacturers and parts suppliers hire staff in anticipation of compliance with the standard. A job-year is a way to calculate the amount of work needed to complete a specific task. For example, a job-year is one year of work for one person.

TABLE X–1—EMPLOYMENT EFFECTS DUE TO INCREASED COSTS OF VEHICLES AND PARTS, IN JOB-YEARS

Year	Costs (millions of 2010$)	Maximum employment effect (if all expenditures are in the parts sector)	Minimum employment effect (if all expenditures are in the light duty vehicle mfg sector)
2016	$ 23	0	0
2017	709	+ 900	+200
2018	1,340	+1,700	+400

[503] Bureau of Labor Statistics. *Employment Requirements Matrix. http://www.bls.gov/emp/ep_data_emp_requirements.htm.*

[504] U.S. Census Bureau. *Annual Survey of Manufactures. http://www.census.gov/manufacturing/asm/index.html.*

[505] To estimate the proportion of domestic production affected by the change in sales, we use data from Ward's Automotive Group for total car and truck production in the U.S. compared to total car and truck sales in the U.S. For the period 2001–2010, the proportion is 66.7 percent.

TABLE X–1—EMPLOYMENT EFFECTS DUE TO INCREASED COSTS OF VEHICLES AND PARTS, IN JOB-YEARS—Continued

Year	Costs (millions of 2010$)	Maximum employment effect (if all expenditures are in the parts sector)	Minimum employment effect (if all expenditures are in the light duty vehicle mfg sector)
2019	1,440	+1,800	+400
2020	1,600	+1,900	+400
2021	1,730	+2,000	+400
2022	1,900	+2,100	+400
2023	1,920	+2,000	+400
2024	2,040	+2,100	+400
2025	2,130	+2,100	+400

c. The Factor Shift Effect

The factor shift effect looks at the changes in labor intensity associated with a regulation. As noted above, the estimates of the cost effect assume constant labor per $1 million in expenditures, though the new technologies may be either more or less labor-intensive than the existing ones. We have no evidence on the factor shift effect for the compliance technologies and therefore do not quantify it. An estimate of the factor shift effect would either increase or decrease the estimate used for the cost effect.

d. Summary of Employment Effects in the Auto Sector

The overall effect of the proposed rule on auto sector employment depends on the relative magnitude of the cost effect, the demand effect and the factor shift effect. Because we do not have quantitative estimates of the demand and factor shift effects we cannot reach a quantitative estimate of the overall employment effects of the proposed rule on auto sector employment or even whether the total effect would be positive or negative. However, given that the expected increase in production costs to the auto manufacturers is relatively small, we expect that the magnitudes of all these effects will be small as well. Additionally, the cost and demand effects are expected to work in opposite directions. Thus while we do not have an estimate of the direction of the overall effect of the proposed rule on auto sector employment, we expect it will be imperceptible.

Additionally, the proposed rule is not expected to provide incentives for manufacturers to shift employment between domestic and foreign production. This is because the increased standards of the proposed rule would apply to vehicles sold in the U.S. regardless of where they are produced. If foreign manufacturers already have increased expertise in satisfying the requirements of the proposal, there may be some initial incentive for foreign production, but the opportunity for the U.S. to sell in other markets might increase. To the extent that the requirements of this proposal might lead to installation and use of technologies that other countries may seek now or in the future, developing this capacity for domestic production now may provide some additional ability to serve those markets. This potential benefit would not apply if other countries are not likely to have similar standards.

2. Refinery Employment Impacts

The Morgenstern et al. (2002) framework of demand effects, cost effects and factor shift effects can also be applied to the impact of the proposed rule on employment in the refinery sector. Here we use a fully qualitative approach. A qualitative discussion allows for a wider incorporation of additional considerations, such as timing of impacts and the effects of the rule on imports and exports. Because the discussion is qualitative, we do not sum the net effects on employment. The demand effect on refining sector employment is expected to be negative. The discussion in Section X.C above suggested that the proposed rule would cause a small decrease in the quantity of gasoline demanded due to higher production costs being passed through to consumers. This slightly reduced level of sales would likely have a negative impact on employment in the refining sector. While we do not quantify the level of job losses that could be expected here, recall that the quantity of gasoline sold as a result of the standards proposed here is expected to decrease by only a very small amount over any time horizon.

The cost effect of the proposed rule on employment in the refining sector is expected to be positive as usual in the Morgenstern et al. (2002) framework. In order to satisfy the requirements of the proposed rule, firms in the refining industry are expected to need to perform additional work that will require hiring more employees, especially perhaps in the short run. Section V.A.2.c discusses the expected employment needed to reduce the sulfur content of fuels; as noted there, to meet the proposed Tier 3 sulfur standards, refiners are expected to invest $2.2 billion between 2014 and 2019 and utilize approximately 1,000 front-end design and engineering jobs and 6,000 construction jobs. As the petroleum sector employed approximately 65,000 workers in 2009, this temporary increase in employment would be comparable to an increase of over 10 percent when compared to 2009 levels.

As with our analysis of the vehicle manufacturing sector, we do not have information on the direction the factor shift effect might take. It is unclear whether the refining industry would become more or less capital intensive as a result of the proposed rule. Thus the direction of the factor shift effect is ambiguous.

This rule is not expected to provide incentives to shift employment between domestic and foreign production. First, the proposed standards would apply to gasoline sold in the U.S. regardless of where it has been produced. U.S. gasoline demand is projected to continue to decline for the foreseeable future in response to higher gasoline prices, more stringent vehicle and engine greenhouse gas and fuel economy standards as well as increased use of renewable fuels. As a result, this analysis of incentives to shift employment between domestic and foreign production focuses on investments for existing capacity instead of expanding capacity.[506] In this case, what is relevant is whether the necessary modifications to comply with Tier 3 would be significantly cheaper overseas than in the U.S.

The main impacts on capital and operating costs to comply with Tier 3

[506] While refinery capacity has been increasing around the world in recent years, it has been designed primarily to supply foreign markets other than the U.S. (e.g., increasing demand in China and India).

associated with adding hydrotreating capacity are likely to be similar overseas as in the U.S. This is particularly true when analyzing likely sources of U.S. imports. The majority of gasoline imported to the U.S. today comes into the East Coast and is sourced out of either Europe or refineries in Canada or the Caribbean that exist almost solely to supply the U.S. market. These Canadian and Caribbean refineries, by virtue of their focus on the U.S. market, are very similar to U.S. based refineries and would be expected to have to incur similar capital and operating costs as their U.S. based competitors meeting the 10 ppm standard. Furthermore, the European refineries are already producing gasoline to a 10 ppm sulfur cap for Europe. To the extent they have refinery streams that are more difficult to hydrotreat, the U.S. market currently serves as an outlet for their higher sulfur gasoline streams. As a result, they may incur capital and operating costs on a per gallon basis at least as high as for their U.S. based competitors for these remaining higher sulfur gasoline streams. Alternatively, they may instead choose to find markets outside the U.S., opening the way for increased U.S. based refinery demand.

Finally, despite refining industry projections that previously imposed diesel rules would lead to greater U.S. reliance on imports through major negative impacts on domestic refining, the reverse has actually occurred. Over the last 8 years, imports of gasoline and diesel fuel have continued to be the marginal supply, and have even dropped precipitously so that the U.S. is now a net exporter of diesel fuel and is importing half the gasoline that it did at its peak in 2006. With the projected decline in future gasoline demand in the U.S. as vehicle fuel efficiency improves, gasoline imports are expected to continue to decline.

Thus it is expected that for the refining sector, the demand effect would lower employment, the cost effect would raise employment, and the factor shift effect would have an ambiguous effect on employment. As a whole then, it is not evident whether the proposed rule would increase or decrease employment in the refining sector. However, given the small anticipated reduction in quantity sold, it appears that the rule would not have major employment consequences for this sector.

The petroleum industry is one of the four industries studied by Morgenstern et al. (2002) when they look at the effect of environmental expenditures on employment. They found a small but statistically significant increase in employment in this sector (2.17 jobs per million dollars of expenditures, using 1987$). Using this factor (adjusted to 2010$), the estimated sulfur fuel control costs in 2017 of $1,289 million would imply an increase of approximately 1,600 jobs in the refinery sector. We note that the regulations that this estimate is derived from are not directly comparable to the current proposed rule; it is based on the costs of reductions in refinery emissions instead of changing fuel properties, and therefore may not be applicable for the standards proposed here.

Section 5.3 of the draft RIA contains some historical discussion regarding the impact on refineries and refining capacity of earlier rules which resulted in higher costs for refiners. Over the period 2003–2011, when a number of rules were being implemented, EIA data show a net of two net refinery closures on its Web site. Meanwhile, over this same period the average size of U.S. refineries increased from 113,000 barrels per day to 123,000 barrels per day, and total U.S. refining capacity increased by six percent. Thus, historically during a time when rules with much larger expected impacts were being implemented (the 2003 ultra-low sulfur nonroad diesel proposal alone was expected to have a cost impact on refineries more than five times greater than the current proposed rule), U.S. refining capacity increased even as the number of U.S. refineries slightly fell. While closing refineries has a negative effect on industry employment, it is likely that the increased refining capacity at many of the remaining plants had a positive effect on industry employment.

The proposed rule is also likely to have a positive impact on employment among producers of equipment that refiners will use to comply with the standards. Section V.A.2.c notes that some refiners are expected to need to revamp their current treatment units, and others will need to add additional treatment units. Producers of this equipment would be expected to hire additional labor to meet this increased demand. We also note that the employment effects may be different in the immediate implementation phase than in the ongoing compliance phase. It is expected that the employment increases through the cost effect from revamping old equipment and installing additional equipment should occur in the near term, when current unemployment levels are high, and the opportunity cost of workers is relatively low. Meanwhile, the employment decreases in the refining sector from the demand effect would not start until 2017, when compliance would be required, and when unemployment is expected to be reduced; in a time of full employment, any changes in employment levels in the regulated sector are mostly expected to be offset by changes in employment in other sectors.

XI. Public Participation

We request comment on all aspects of this proposal. This section describes how you can participate in this process.

A. How do I submit comments?

Public comments on this proposal must be received on or before June 13, 2013. If you have an interest in the proposed program described in this document, we encourage you to comment on any aspect of this rulemaking. We also request comment on specific topics identified throughout this proposal.

Your comments will be most useful if you include appropriate and detailed supporting rationale, data, and analysis. Commenters are especially encouraged to provide specific suggestions for any changes to any aspect of the regulations that they believe need to be modified or improved. You should send all comments, except those containing proprietary information, to our Air Docket (see **ADDRESSES** in the first part of this proposal) before the end of the comment period.

You may submit comments electronically, by mail, or through hand delivery/courier. To ensure proper receipt by EPA, identify the appropriate docket identification number in the subject line on the first page of your comment. Please ensure that your comments are submitted within the specified comment period. Comments received after the close of the comment period will be marked ''late.'' EPA is not required to consider these late comments. If you wish to submit Confidential Business Information (CBI) or information that is otherwise protected by statute, please follow the instructions in Section XI.B.

B. How should I submit CBI to the agency?

Do not submit information that you consider to be CBI electronically through the electronic public docket, *www.regulations.gov*, or by email. Send or deliver information identified as CBI only to the following address:

U.S. Environmental Protection Agency, Assessment and Standards Division, 2000 Traverwood Drive, Ann Arbor, MI, 48105, Attention Docket ID EPA–HQ– OAR–2011–0135. You may claim information that you submit to

EPA as CBI by marking any part or all of that information as CBI (if you submit CBI on disk or CD–ROM, mark the outside of the disk or CD–ROM as CBI and then identify electronically within the disk or CD–ROM the specific information that is CBI). Information so marked will not be disclosed except in accordance with procedures set forth in 40 CFR part 2.

In addition to one complete version of the comments that include any information claimed as CBI, a copy of the comments that does not contain the information claimed as CBI must be submitted for inclusion in the public docket. If you submit the copy that does not contain CBI on disk or CD–ROM, mark the outside of the disk or CD–ROM clearly that it does not contain CBI. Information not marked as CBI will be included in the public docket without prior notice. If you have any questions about CBI or the procedures for claiming CBI, please consult the person identified in the **FOR FURTHER INFORMATION CONTACT** section.

C. What should I consider as I prepare my comments for EPA?

You may find the following suggestions helpful for preparing your comments:

- Explain your views as clearly as possible.
- Describe any assumptions that you used.
- Provide any technical information and/or data you used that support your views.
- If you estimate potential burden or costs, explain how you arrived at your estimate.
- Provide specific examples to illustrate your concerns.
- Offer alternatives.
- Make sure to submit your comments by the comment period deadline identified.
- To ensure proper receipt by EPA, identify the appropriate docket identification number in the subject line on the first page of your response. It would also be helpful if you provided the name, date, and **Federal Register** citation related to your comments.

D. Will there be a public hearing?

Public hearings for this proposal were held on April 24, 2013 and April 29, 2013; EPA has announced more information regarding the public hearing locations in a supplemental **Federal Register** Notice.

XII. Statutory and Executive Order Reviews

A. Executive Order 12866: Regulatory Planning and Review and Executive Order 13563: Improving Regulation and Regulatory Review

Under section 3(f)(1) of Executive Order 12866 (58 FR 51735, October 4, 1993), this action is an ''economically significant regulatory action'' because it is likely to have an annual effect on the economy of $100 million or more. Accordingly, EPA submitted this action to the Office of Management and Budget (OMB) for review under Executive Orders 12866 and 13563 (76 FR 3821, January 21, 2011) and any changes made in response to OMB recommendations have been documented in the docket for this action.

In addition, EPA prepared an analysis of the potential costs and benefits associated with this action. This analysis is contained in Sections VII and VIII of this preamble and in Chapter 8 of the draft RIA. A copy of the analysis is available in the docket for this action.

B. Paperwork Reduction Act

The information collection requirements in this proposed rule have been submitted for approval to the Office of Management and Budget (OMB) under the *Paperwork Reduction Act,* 44 U.S.C. 3501 *et seq.* The Information Collection Request (ICR) documents prepared by EPA have been assigned EPA ICR number 0783.63 for the vehicles provisions and EPA ICR 2482.01 and ICR 2459.01 for the fuels provisions.

This proposed rule also contains reporting and recordkeeping requirements for refiners and importers of motor vehicle gasoline, producers of gasoline additives, and producers of denatured fuel ethanol and other oxygenates. The proposed recordkeeping and reporting requirements for refiners and importers of motor vehicle gasoline are the same requirements that exist under the Tier 2 sulfur program.[507] The recordkeeping and Product Transfer Document (PTD) requirements for gasoline additive producers and PTD retention requirements for downstream parties under the proposed Tier 3 program are new but should be minimal since we expect that they are already followed as part of normal business practices. Finally, there are new recordkeeping and PTD requirements for producers of denatured fuel ethanol under the proposed Tier 3 program. EPA estimates the total number of respondents to be 2,675, the total burden hours to be 84,000 and the total cost to respondents to be $6,300,000.

This proposed rule also contains reporting and recordkeeping requirements for refiners and importers of motor vehicle gasoline. The recordkeeping and reporting requirements for these entities under the proposed Tier 3 program are the same requirements that exist under the Tier 2 sulfur program.[508] The recordkeeping and Product Transfer Document (PTD) requirements for gasoline additive producers and PTD requirements for downstream parties under the proposed Tier 3 program are new but should be minimal since we expect that they are already followed as part of normal business practices. Finally, there are new recordkeeping and PTD requirements for producers of denatured fuel ethanol under the proposed Tier 3 program. EPA estimates the total number of respondents to be 1,500, the total burden hours to be 76,743 and the total cost to respondents to be $5,908,504.

Finally, this proposed rule also contains provisions for qualifications of laboratories on test methods. We have proposed recordkeeping and reporting requirements that would apply to fuel testing laboratories. The collected data will permit EPA to: (1) Qualify laboratories to use test methods based upon accuracy and precision criteria supported by industry; and (2) Ensure that various fuels meet the standards required under the regulations at 40 CFR part 80 and that the associated benefits to human health and the environment are realized. We estimate that 750 laboratories may be subject to the proposed information collection. This estimate is based upon our experience with qualification of laboratories under the existing diesel sulfur program. We estimate an annual reporting burden of 95 hours per respondent and an annual recordkeeping burden of 104 hours, yielding a total of 199 hours. For those laboratories that elect to be reference installations, the annual reporting burden would be 95 hours and the annual recordkeeping burden would be 128 hours.

Supporting statements for all 3 ICRs can be found in Docket ID number EPA–HQ–OAR–2011–0135.

Burden is defined at 5 CFR 1320.3(b). An agency may not conduct or sponsor, and a person is not required to respond to a collection of information unless it

[507] 65 FR 6698, February 10, 2000; OMB Control Number: 2060–0437; EPA ICR 1907.05.

[508] 65 FR 6698, February 10, 2000; OMB Control Number: 2060–0437; EPA ICR 1907.05.

displays a currently valid OMB control number. The OMB control numbers for EPA's regulations in 40 CFR are listed in 40 CFR part 9.

To comment on the Agency's need for this information, the accuracy of the provided burden estimates, and any suggested methods for minimizing respondent burden, EPA has established a public docket for this rule, which includes these ICR numbers, under Docket ID number EPA–HQ–OAR–2011–0135. See the **ADDRESSES** section at the beginning of this notice for where to submit comments to EPA. Send comments to OMB at the Office of Information and Regulatory Affairs, Office of Management and Budget, 725 17th Street NW., Washington, DC 20503, Attention: Desk Office for EPA. Since OMB is required to make a decision concerning the ICR between 30 and 60 days after May 21, 2013, a comment to OMB is best assured of having its full effect if OMB receives it by June 20, 2013. The final rule will respond to any OMB or public comments on the information collection requirements contained in this proposal.

C. Regulatory Flexibility Act

1. Overview

The Regulatory Flexibility Act (RFA) generally requires an agency to prepare a regulatory flexibility analysis of any rule subject to notice and comment rulemaking requirements under the Administrative Procedure Act or any other statute unless the agency certifies that the rule will not have a significant economic impact on a substantial number of small entities. Small entities include small businesses, small organizations, and small governmental jurisdictions.

For purposes of assessing the impacts of today's rule on small entities, small entity is defined as: (1) A small business as defined by the Small Business Administration's (SBA) regulations at 13 CFR 121.201 (see table below); (2) a small governmental jurisdiction that is a government of a city, county, town, school district or special district with a population of less than 50,000; and (3) a small organization that is any not-for-profit enterprise which is independently owned and operated and is not dominant in its field.

The following table provides an overview of the primary SBA small business categories potentially affected by this regulation:

Industry	NAICS [a] Code (2007)	Defined as small entity by SBA if less than or equal to:
Gasoline fuel refiners and importers	324110	1,500 employees.
Ethanol producers	325193	1,000 employees.
Gasoline additive manufacturers	325199	1,000 employees.
	325998	500 employees.
	424690	100 employees.
Transmix processors	*Varied*	1,500 employees.
Petroleum bulk stations and terminals	424710	100 employees.
Other warehousing and storage—bulk petroleum storage	493190	$25.5 million (annual receipts).
Light-duty vehicle and light-duty truck manufacturers	336111, 336112	1,000 employees.
Independent commercial importers	811111, 811112, 811198	$7 million (annual receipts).
Alternative fuel converters	335312	1,000 employees.
	336312	750 employees.
	336322	″
	336399	″
	811198	$7 million (annual receipts).
On-highway heavy-duty engine & vehicle (>8,500 lbs GVWR) manufacturers.	333618	1,000 employees.
	336120	″
	336211	″
	336312	750 employees.

Note:
[a] North American Industrial Classification System.

2. Background

EPA's Tier 2 Vehicle and Gasoline Sulfur Program, which was finalized in February 2000, took a systems-based approach to motor vehicle pollution by setting standards for both passenger vehicles and their fuel (gasoline). The program set stricter tailpipe and evaporative emissions standards for criteria pollutants from vehicles beginning with model year (MY) 2004 and phasing in through 2009. The program also lowered the sulfur content of gasoline, to a 30-ppm refinery average, 80-ppm per-gallon cap, and 95-ppm downstream cap; beginning in 2004 and phasing in through 2008. The potential to extend the phase-in for small refiners and approved Gasoline Phase-In Area (GPA) refiners through the end of 2010 was provided in the Highway Diesel Rule [509] in exchange for early compliance with the diesel program. Similar to the Tier 2 rule, the Tier 3 rule being proposed today is a comprehensive, systems-based approach to address the impact of light-duty vehicles and certain heavy-duty vehicles on air quality and health.

Pursuant to section 603 of the RFA, EPA prepared an initial regulatory flexibility analysis (IRFA) that examines the impact of the proposed rule on small entities along with regulatory alternatives that could reduce that impact. The IRFA is available for review in the rulemaking docket (in Chapter 10 of the draft RIA) and is summarized below.

As required by section 609(b) of the RFA, as amended by SBREFA, EPA also conducted outreach to small entities and convened a Small Business Advocacy Review Panel to obtain advice and recommendations of representatives of the small entities that potentially would be subject to the rule's requirements.

Consistent with the RFA/SBREFA requirements, the Panel evaluated the assembled materials and small-entity comments on issues related to elements of the IRFA. A copy of the Panel Report is included in the docket for this proposed rule, and a summary of the Panel process, and subsequent Panel recommendations, is summarized below.

3. Reason for Today's Proposed Rule

This rule proposes to establish more stringent vehicle emissions standards and reduce the sulfur content of

[509] 66 FR 5136 (January 18, 2001).

gasoline beginning in 2017, as part of a systems approach in addressing the impacts of motor vehicles and fuels on air quality and public health. The proposed gasoline sulfur standard would make emission control systems more effective and enable more stringent vehicle emissions standards, and the proposed vehicle standards would reduce vehicle tailpipe and evaporative emissions. This would result in significant reductions in pollutants such as ozone, particulate matter, and air toxics. For a more detailed discussion of the reasoning for today's proposed rule, please see Sections II and III of this preamble. The proposed vehicle and fuel programs are further discussed in Sections IV and V, respectively.

4. Legal Basis for Agency Action

The Clean Air Act (CAA) authorizes EPA to establish emissions standards for motor vehicles to address air pollution that may reasonably be anticipated to endanger public health or welfare. EPA also has authority to establish fuel controls to address such air pollution. The authority for the proposed vehicle emission standards comes from CAA section 202(a), Section 202(k) provides EPA with authority to issue and revise regulations applicable to evaporative emissions of hydrocarbons from gasoline-fueled motor vehicles, and section 206(d) authorizes EPA to establish methods and procedures for testing whether a motor vehicle or motor vehicle engine conforms with section 202 requirements. The authority for the proposed fuel standards comes from section 211(c).

For more detailed information on our legal authority for today's proposal, please see Sections II.A and V.G of this preamble.

5. Summary of Potentially Affected Small Entities

The table above lists industries/sectors potentially affected by the proposed rule. For businesses potentially impacted by the Tier 3 vehicle standards, this includes vehicle manufacturers, alternative fuel converters, and independent commercial importers. For businesses potentially impacted by the Tier 3 fuel standards, this includes gasoline refiners and importers, distributors, fuel additive manufacturers, transmix producers, and ethanol producers.

EPA used a variety of sources to identify which entities are appropriately considered ''small.'' EPA used the criteria for small entities developed by the Small Business Administration under the North American Industry Classification System (NAICS) as a guide. Information about these entities comes from sources including the Energy Information Administration (EIA) within the U.S. Department of Energy, oil industry literature, EPA's certification data, and previous rulemakings that have affected these industries. EPA then found employment information for these companies using the business information database Hoover's Online (a subsidiary of Dun and Bradstreet). These entities fall under the categories listed in the table.

To gauge the impact of the proposed standards on small businesses, EPA employed a cost-to-sales ratio test to estimate the number of small businesses that would be impacted by less than one percent, between one and three percent, and above three percent. Overall, EPA projects that 13 small businesses will be impacted by less than one percent, 13 small businesses will be impacted by one to three percent, and 5 small businesses will be impacted by more than three percent. A more detailed description of the inputs used for each affected industry sector and the methodology used to develop the estimated impact on small businesses in each industry sector is included in the IRFA as presented in Chapter 10 of the draft RIA for this rulemaking.

6. Potential Reporting, Recordkeeping, and Compliance

For any emission control program, EPA must have assurances that the regulated products will meet the standards. The program that EPA is considering for manufacturers subject to this proposal will include testing, reporting, and record keeping requirements for manufacturers of vehicles covered by the proposed Tier 3 regulations. Testing requirements for these manufacturers could include certification emission (including deterioration factor) testing, in-use testing, and production line testing. Reporting requirements would likely include emission test data and technical data on the vehicles. Manufacturers would have to keep records of this information.

For any fuel control program, EPA must have assurance that fuel produced, distributed, sold and used meets the applicable standard. EPA expects that the recordkeeping, reporting, and compliance provisions of the proposed rule would be fairly consistent with those in place today for other fuel programs. Further, we expect to use existing registration and reporting systems that parties in the fuel production and distribution industry are already familiar with.

7. Related Federal Rules

The primary federal rules that are related to the proposed Tier 3 rule under consideration are: The Tier 2 Vehicle/Gasoline Sulfur rulemaking (65 FR 6698, February 10, 2000), the 2017 Light-duty Greenhouse Gas (GHG) rule (77 FR 62623), and the Petroleum Refinery Sector Risk and Technology Review and New Source Performance Standards rule (RTR/NSPS; 77 FR 41051).

The 2017 LD GHG rule is a coordinated effort by EPA and the National Highway Traffic Safety Administration (NHTSA) taking steps to enable the production of a new generation of clean vehicles, through reduced GHG emissions and improved fuel efficiency from on-road vehicles and engines.

The rules to address Petroleum Refinery Sector Risk and Technology Review (RTR) and New Source Performance Standards (NSPS) focus on developing updated emissions standards for petroleum refineries for multiple pollutants, including GHGs. The rules are based on results of the RTR analyses for both Maximum Achievable Control Technology standards (MACT 1 and 2). The technology review would be conducted to identify any new practices, processes, or control technologies for the industry and cost-effective emission control options. EPA is developing uniform standards for some emission sources in the petroleum refining sector that may serve as the basis for these technology reviews. The rules also review the standards and rule provisions to determine whether other changes may be needed during periods of start-up, shutdown, and malfunction to ensure the standards are consistent with recent court opinions and other CAA programs. With regard to NSPS, the rules address remaining NSPS issues under reconsideration from the promulgation of existing NSPS and other NSPS rules affecting the refining sector, and include the regulation of GHGs and the development of emission guidelines for existing sources.

8. Summary of SBREFA Panel Process and Panel Outreach

a. Significant Panel Findings

The Small Business Advocacy Review Panel (SBAR Panel, or the Panel) considered regulatory options and flexibilities to help mitigate potential adverse effects on small businesses as a result of this rule. During the SBREFA Panel process, the Panel sought out and received comments on the regulatory options and flexibilities that were

presented to SERs and Panel members. The recommendations of the Panel are described below and are also located in Section 9 of the SBREFA Final Panel Report, which is available in the public docket.

b. Panel Process

As required by section 609(b) of the RFA, as amended by SBREFA, we also conducted outreach to small entities and convened an SBAR Panel to obtain advice and recommendations of representatives of the small entities that potentially would be subject to the rule's requirements. On August 4, 2011, EPA's Small Business Advocacy Chairperson convened a Panel under Section 609(b) of the RFA. In addition to the Chair, the Panel consisted of the Division Director of the Assessment and Standards Division of EPA's Office of Transportation and Air Quality, the Chief Counsel for Advocacy of the Small Business Administration, and the Administrator of the Office of Information and Regulatory Affairs within the Office of Management and Budget. As part of the SBAR Panel process, we conducted outreach with representatives of small businesses that would potentially be affected by the proposed rulemaking. We met with these Small Entity Representatives (SERs) to discuss the potential rulemaking approaches and potential options to decrease the impact of the rulemaking on their industries. We distributed outreach materials to the SERs; these materials included background on the rulemaking, possible regulatory approaches, and possible rulemaking alternatives. The Panel met with SERs from the industries that would be directly affected by the Tier 3 rule on August 18, 2011 to discuss the outreach materials and receive feedback on the approaches and alternatives detailed in the outreach packet (the Panel also met with SERs on June 28, 2011 for an initial outreach meeting). The Panel received written comments from the SERs following the meeting in response to discussions had at the meeting and the questions posed to the SERs by the Agency. The SERs were specifically asked to provide comment on regulatory alternatives that could help to minimize the rule's impact on small businesses.

The Panel's findings and discussions were based on the information that was available during the term of the Panel and issues that were raised by the SERs during the outreach meetings and in their comments. It was agreed that EPA should consider the issues raised by the SERs and discussions had by the Panel itself, and that EPA should consider comments on flexibility alternatives that would help to mitigate negative impacts on small businesses to the extent legally allowable by the Clean Air Act. Alternatives discussed throughout the Panel process included those offered in previous or current EPA rulemakings, as well as alternatives suggested by SERs and Panel members. A summary of these recommendations is detailed below, and a full discussion of the regulatory alternatives and hardship provisions discussed and recommended by the Panel can be found in the SBREFA Final Panel Report. A complete discussion of the provisions for which we are requesting comment and/or proposing in this action can be found in Sections IV.E and V.D of this preamble. Also, the Panel Report includes all comments received from SERs (Appendix B of the Report) and summaries of the two outreach meetings that were held with the SERs. In accordance with the RFA/SBREFA requirements, the Panel evaluated the aforementioned materials and SER comments on issues related to the IRFA. The Panel's recommendations from the Final Panel Report are discussed below.

It should be noted that during the Panel process, two additional issues were discussed with SERs that were under consideration by the Agency for the Tier 3 proposal. As noted in Section IV.D.5, EPA was considering extending the new certification fuel specifications to all regulatory categories of engines, vehicles, equipment, and fuel system components that use gasoline. This would have included a wide range of additional applications, including small nonroad engines used in lawn and garden applications, recreational vehicles such as ATVs and snowmobiles, recreational marine applications, on-highway motorcycles, and heavy-duty gasoline engines. In addition, EPA considered new volatility (Reid Vapor Pressure, or RVP) standards for in-use gasoline. Neither of these issues is being proposed in today's notice. Therefore, the following discussion of the Panel recommendations does not address these issues. The reader is directed to the Panel Report, located in the rulemaking docket, for more information on both of these issues.

c. Panel Recommendations

i. Tier 3 Fuels

The Panel discussed several regulatory flexibility alternatives with SERs for small businesses in the gasoline production and distribution, fuel additive manufacturing, and ethanol production industries subject to the proposed fuel requirements. Panel recommendations on these approaches are discussed below.

(1) Lead Time—Sulfur

The Panel recommended that EPA propose a delay option, similar to previous fuels rulemakings, in the Tier 3 proposed rule. The Panel recommended that EPA allow small refiners to postpone their compliance with the Tier 3 program for up to three years. Small refiners choosing this flexibility option would have from January 1, 2017 through December 31, 2019 to continue production of gasoline with an average sulfur level of 30 ppm (per the Tier 2 gasoline sulfur program). Compliance with the 10-ppm sulfur standard would begin on January 1, 2020. Any small refiner choosing this proposed option would be allowed to continue use of their Tier 2 gasoline sulfur credits through December 31, 2019 to meet the refiner average 30-ppm sulfur standard.

The Panel also recommended that EPA request comment on case-by-case hardship provisions that would provide additional relief for any refiner experiencing extreme difficulty in compliance with the Tier 3 requirements, as discussed below in Section XII.C.6.c.i.(6).

(2) Provisions for Additive Manufacturers

The Panel recommended that EPA provide flexibilities for gasoline additive manufacturers. Following discussion with EPA, the Panel suggested that EPA propose the following flexibilities:

- For additives used downstream of the refiner: Differentiating bulk additives based on whether they meet a 20- or 25-ppm sulfur standard.
- For aftermarket consumer additives: Allow for aftermarket additives to meet either a 20-ppm or 25-ppm sulfur cap.
- For additives not meeting a 10-, 20-, or 25-ppm sulfur limit: Allow for the use of volume accounting reconciliation (VAR) records for additives that would not be able to meet a 25-ppm sulfur cap to show that use of the additive would not cause the sulfur level of the finished fuel to exceed 10 ppm (similar to the Nonroad Diesel Rulemaking, 69 FR 39088, June 29, 2004), and require product labeling for aftermarket additives.

(3) Refinery Gate and Downstream Caps

With regard to the 20-ppm refinery gate cap discussed in Section 3 of the Panel Report, the Panel had concerns that such a standard could cause operational problems for small refiners

during a refinery turnaround or an upset, because a cap of this level could result in a refiner not being able to produce gasoline (as noted in their comments in Section 8 of the Panel Report). The Panel likewise had concerns that a downstream cap of 25 ppm could cause problems for small downstream entities, such as transmix processors, because they may not be able to reprocess finished gasoline down to this level (also noted in their comments in Section 8 of the Panel Report).

Thus, the Panel recommended that EPA assess and request comment on retaining the current Tier 2 refinery gate and downstream caps of 80 and 95 ppm, respectively, to help provide maximum flexibility and avoid system upsets for the entire refining and distribution system. Thus, the SBA and OMB Panel members recommend that EPA propose retaining the 80-ppm and 95-ppm caps.

The Panel also recommended that EPA request comment on additional refinery gate and downstream caps above 20/25 ppm but below 80/95 ppm. Additionally, the Panel recommended that EPA allow the current Tier 2 80-ppm sulfur refinery gate cap and 95-ppm sulfur downstream cap in Alaska to remain at these levels indefinitely.

(4) Hardship Provisions

During the Panel process, EPA stated its intent to propose hardship provisions (for all gasoline refiners and importers) similar to those in prior EPA fuels programs: (a) The extreme unforeseen circumstances hardship provision, and (b) the extreme hardship provision. A hardship based on extreme unforeseen circumstances is intended to provide short term relief due to unanticipated circumstances beyond the control of the refiner, such as a natural disaster or a refinery fire. An extreme hardship is intended to provide short-term relief based on extreme circumstances (e.g., extreme financial problems, extreme operational or technical problems, etc.) that impose extreme hardship and thus significantly affect a refiner's ability to comply with the program requirements by the applicable dates. In the context of the proposal, the Panel agrees that such relief could consider long-term relief on the sulfur cap (similar to that for Alaska) if the circumstances both warrant it and can be structured in a way to allow for it. The Panel agrees with the proposal of such provisions and recommended that EPA include them in the Tier 3 proposed rulemaking.

ii. Tier 3 Vehicles

As discussed in Section 5 of the Panel Report, in addition to vehicle manufacturers, two distinct categories of businesses relating to highway light-duty vehicles and heavy-duty trucks would be covered by the new vehicle standards: independent commercial importers (ICIs), and alternative fuel vehicle converters. As discussed below, EPA's expectation at the time of the Panel process was to propose a set of flexibilities that would be available to all small entities in these three business categories as well as any businesses in these categories that sell less than 5,000 vehicles per year. The Panel identified a number of entities covered by the vehicle standards that qualify as small businesses under the SBA definition. Six of these companies participated as SERs.

The Panel discussed several regulatory flexibility alternatives with SERs for small businesses that certify vehicles subject to the proposed Tier 3 emission standards. As described in Appendix A (and similar to provisions in the Tier 2 rule), EPA sought comment from the SERs on allowing small entities to simply comply with the proposed emission standards with 100 percent of their vehicles during the last year of the phase-in period. In addition, EPA sought comment on the following flexibilities: (1) A hardship provision that would allow these businesses to apply for additional time to meet any of the 100 percent phase-in requirements, (2) use of assigned deterioration factors for certification purposes, and (3) reduction in the number of tests required in the manufacturer in-use verification testing program (see 40 CFR 86.1845–04). SERs were generally supportive of these flexibility provisions. However, one SER requested that EPA consider providing relaxed standards for exhaust emissions in addition to the delay and another SER requested that we consider eliminating some of the evaporative emission testing requirements.

Panel recommendations on these approaches are discussed below.

(1) Exhaust Emission Standards and Lead Time

In the types of businesses subject to the potential Tier 3 standards, small businesses have limited resources available for developing new designs to comply with new emission standards. In addition, it is often necessary for these businesses to rely on vendor companies for technology. Moreover, percentage phase-in requirements pose a dilemma for a small manufacturer that has a limited product line (e.g., the manufacturer certifies vehicles in only one or two test groups). Thus, similar to the flexibility provisions implemented in previous vehicle rules, the Panel recommended that EPA allow small businesses the following flexibility options for meeting the potential Tier 3 exhaust emissions standards.

The Panel recommended that small businesses be given additional lead time to comply with the potential Tier 3 exhaust standards and allow small businesses to comply with the standards with 100 percent of their vehicles starting in model year 2022. (This is similar to the Tier 2 rule where EPA allowed small manufacturers to wait until the end of the phase-in to comply with the Tier 2 standards.) During the Panel process, the proposed Tier 3 rule was expected to have several different phase-in schedules; with the final dates varying from model year 2021 for the new exhaust PM standards and use of the new E15 certification fuel, to model year 2022 for the new evaporative emission standards, to model year 2025 for the new exhaust gaseous pollutant standards. The Panel noted that requiring all small businesses to comply with the full slate of Tier 3 requirements in model year 2022 should provide sufficient lead time for manufacturers to plan for and implement the technology changes needed to comply with the Tier 3 standards.

One of the SERs recommended that EPA adopt relaxed exhaust standards for small manufacturers. The SER noted that the exhaust emission averaging program being proposed by EPA would allow large manufacturers that have many engine families to certify their small, niche products at levels numerically higher than the standards. Small manufacturers that typically do not have more than one or two emission families generally cannot use averaging to the same extent because of their limited product offerings. The SER's concern was that the high-performance vehicles produced by large manufacturers which they compete against would be able to certify at numerically higher levels at less cost than the SER would incur. While EPA was planning to propose the same standards for all manufacturers, the Panel recommended that EPA request comment on allowing small manufacturers to meet relaxed exhaust emission standards. This could also be included as part of the hardship provision discussed below. The Panel recommended that EPA request comment on the relaxed standards recommended by the SER. The SER-recommended relaxed NMOG+NO_X

standards over the Federal Test Procedure (FTP) are 0.125 grams/mile in model year 2020 and 0.070 grams/mile in model year 2025. In addition, the Supplemental FTP standards would be the standards for the corresponding bins which the manufacturer selected for complying with the FTP standards. For example, if the manufacturer certified to the proposed Tier 3 Bin 125 standards over the FTP, the manufacturer would have to comply with the corresponding Tier 3 Bin 125 standards for the Supplemental FTP.

(2) Evaporative Emission Standards and Lead Time

The Panel recommended that small businesses comply with the Tier 3 evaporative emission standards, including the leak standard, with 100 percent of their vehicles starting in model year 2022. For evaporative emissions, where the Tier 3 standards could begin as early as 2017 and phase-in through 2022, this provision would allow small businesses and SVMs to wait until the last year of the Tier 3 phase-in period for evaporative emission standards for all of their vehicles. This start date is consistent with the start date described above for the Tier 3 exhaust emission requirements being recommended by the Panel for small businesses.

(3) Assigned Deterioration Factors

Under EPA's regulations, manufacturers must demonstrate that their vehicles comply with the emission standards throughout the ''useful life'' period. This is generally done by testing vehicles at low-mileage and then applying a deterioration factor to these emission levels. The deterioration factors are determined by aging new emission control systems and then testing the aged systems again to determine how much deterioration in emissions has occurred. In order to reduce the testing burden on small manufacturers, EPA suggested that small manufacturers could use deterioration factor values assigned by EPA instead of performing the extended testing. A manufacturer would apply the assigned deterioration factors to its low-mileage emission level to demonstrate whether it complied with the Tier 3 emission standards. EPA currently allows this flexibility for small manufacturers. The Panel recommended that EPA propose that small businesses be allowed the option to use EPA-developed assigned deterioration factors in demonstrating compliance with the Tier 3 exhaust and evaporative emission standards. In the past, EPA has relied on deterioration factor data from large manufacturers to develop the assigned DFs for small manufacturers. EPA would expect to follow a similar procedure to determine the assigned DFs for the Tier 3 standards once large manufacturers start certifying their Tier 3 designs. Given that larger manufacturers would begin phasing in to the Tier 3 standards in model year 2017, EPA should have a significant set of emissions deterioration data upon which to base the assigned DFs for small businesses within the first few years of the Tier 3 program. EPA recognizes that assigned DFs need to be determined well in advance of model year 2022 in order to provide sufficient time for small businesses to decide whether or not to use the assigned DFs for certification purposes.

(4) Reduced Testing Burden

Under EPA's regulations, manufacturers must perform in-use testing on their vehicles and demonstrate their in-use vehicles comply with the emission standards. The current in-use testing regulations provide for reduced levels of testing for small manufacturers, including no testing in some cases. EPA suggested that these provisions should continue for small manufacturers with the Tier 3 program. The Panel recommended that EPA propose that small businesses be allowed to have reduced burden under the in-use testing program for Tier 3 vehicles.

One SER requested that EPA eliminate some of the evaporative emission testing requirements for small businesses based on its belief that some of the tests may be duplicative. While EPA noted (during the Panel process) that it understood the reasons behind the manufacturer's suggestion, EPA believed it may be premature to consider such an option in the Tier 3 rule given the impact of the CO_2 emission standards on engine and fuel system development. Currently, it is generally understood that the 2-day diurnal test drives the purge characteristics of evaporative control systems, while the refueling test, and to a lesser degree the 3-day test, drive the capacity requirement of evaporative canisters. Prospectively, due to expected changes in engine and fuel system designs in response to upcoming CO_2 emission standard requirements, this may not be the case. Therefore, at the time of the Panel process, EPA noted its belief that it is appropriate to retain all of the evaporative test procedures. It can be noted that under current regulations, EPA does allow manufacturers to waive 2-day diurnal testing for certification purposes (see 40 CFR 86.1829–01(b)(2)(iii)) and perform only the 2-day diurnal test as part of the in-use testing program (see 40 CFR 86.1845–04(c)(5)(ii)). These provisions would continue in the Tier 3 program. In general, EPA noted that it is open to changes that reduce test burden while maintaining the environmental effectiveness of its programs and could consider changes like those suggested by the SER in the future as the impacts of the future regulations on engine and vehicle design become clearer. EPA also stated that it intends to request comment in the Tier 3 proposal on streamlining the current test procedures for small businesses in ways that would still maintain the overall stringency of the tests.

(5) Hardship Provisions

The Panel recommended that hardship provisions be provided to small businesses for the Tier 3 exhaust and evaporative emission standards. Under the hardship provisions, small businesses would be allowed to apply for additional time to meet the 100 percent phase-in requirements for exhaust and evaporative emissions. All hardship requests would be subject to EPA review and approval. Appeals for such hardship relief would be required to be made in writing and submitted well before the earliest date of noncompliance. The request should identify how much time is being requested. It must also include evidence that the noncompliance would occur despite the manufacturer's best efforts to comply, and must contain evidence that severe economic hardship would be faced by the company if the relief is not granted. The above provision should effectively provide the opportunity for small businesses to obtain more time to comply with the new Tier 3 standards. (The existing hardship provisions limit the extra time that can be requested to 1 year, but such a limit may or may not be included in the proposed Tier 3 hardship provisions.)

(6) Applicability

Under EPA's current Tier 2 regulations, EPA provides a number of flexibilities for small volume manufacturers. The criteria for determining if a company is a small volume manufacturer is based on the annual production level of vehicles and is based on whether the company produces less than 15,000 vehicles per year. Unlike EPA's small volume manufacturer criteria noted above, SBA defines which manufacturers are small businesses (and therefore should be considered under the SBAR Panel process) based on the number of

employees for vehicle manufacturers and annual revenues for ICIs and alternative fuel converters. For example, SBA defines small business vehicle manufacturers as those who have less than 1,000 employees. Similarly, SBA defines small business ICIs as those who have annual revenues of less than $8 million per year.

The Panel recommended that EPA propose to allow all small businesses that meet the SBA criteria be eligible for the flexibilities described above. In addition, in the Panel Report, EPA stated that it is expecting to propose that manufacturers that meet a specified sales-based criterion to be eligible for the flexibilities described above. It is relatively easy for a manufacturer to project and ultimately determine sales. Determining the annual revenues or number of employees is less straightforward. In the recent rule setting the first light-duty vehicle and truck CO_2 emission standards, EPA adopted provisions for small manufacturers based on a sales cutoff of 5,000 vehicles per year as opposed to the 15,000 level noted earlier that is used in the Tier 2 program. In the Panel Report, EPA noted that it expects to propose a small volume manufacturer definition based on the 5,000 vehicle per year level for the Tier 3 program. EPA believes the 5,000 unit cut-off for small volume manufacturers would include all of the small business vehicle manufacturers, ICIs, and alternative fuel converters that meet the applicable SBA definition as well as some additional companies that have similar concerns to small businesses. Lastly, EPA noted in the Panel Report that it expects to propose the flexibilities described above to be available to any manufacturer that meets either the SBA small business criteria or the sales-based criteria.

EPA invites comment on all aspects of the proposal and its impacts on small entities.

D. Unfunded Mandates Reform Act

Title II of the Unfunded Mandates Reform Act of 1995 (UMRA), 2 U.S.C. 1531–1538, requires Federal agencies, unless otherwise prohibited by law, to assess the effects of their regulatory actions on State, local, and tribal governments and the private sector. This rule contains a Federal mandate that may result in expenditures of $100 million or more for State, local, and tribal governments, in the aggregate, or the private sector in any one year. Under section 202 of the UMRA, EPA generally must prepare a written statement, including a cost-benefit analysis, for proposed and final rules with ''Federal mandates'' that may result in expenditures to State, local, and tribal governments, in the aggregate, or to the private sector, of $100 million or more in any one year. Accordingly, EPA has prepared a statement of the cost-benefit analysis as required by section 202 of the UMRA; this statement can be found in Sections VII and VIII of this preamble, and in Chapter 8 of the draft RIA. Before promulgating an EPA rule for which a written statement is needed, section 205 of the UMRA generally requires EPA to identify and consider a reasonable number of regulatory alternatives and adopt the least costly, most cost-effective or least burdensome alternative that achieves the objectives of the rule. The provisions of section 205 do not apply when they are inconsistent with applicable law. Moreover, section 205 allows EPA to adopt an alternative other than the least costly, most cost-effective or least burdensome alternative if the Administrator publishes with the final rule an explanation why that alternative was not adopted.

Before EPA establishes any regulatory requirements that may significantly or uniquely affect small governments, including tribal governments, it must have developed under section 203 of the UMRA a small government agency plan. The plan must provide for notifying potentially affected small governments, enabling officials of affected small governments to have meaningful and timely input in the development of EPA regulatory proposals with significant Federal intergovernmental mandates, and informing, educating, and advising small governments on compliance with the regulatory requirements.

Consistent with section 205, EPA has identified and considered a reasonable number of regulatory alternatives. These alternatives are described above in Sections IV, V, and IX of this preamble.

This rule is not subject to the requirements of section 203 of UMRA because it contains no regulatory requirements that might significantly or uniquely affect small governments. The rule imposes no enforceable duty on any State, local or tribal governments. EPA has determined that this rule contains no regulatory requirements that might significantly or uniquely affect small governments. EPA has determined that this proposal contains a Federal mandate that may result in expenditures of $100 million or more for the private sector in any one year, however EPA believes that the proposal represents the least costly, and most cost-effective approach to achieve the statutory requirements of the rule. The costs and benefits associated with the proposal are discussed above in Sections VII and VIII of this preamble, and in Chapter 8 of the draft RIA, as required by section 202 of the UMRA.

E. Executive Order 13132: Federalism

This proposed action does not have federalism implications. It would not have substantial direct effects on the States, on the relationship between the national government and the States, or on the distribution of power and responsibilities among the various levels of government, as specified in Executive Order 13132. Thus, Executive Order 13132 does not apply to this action. Although Executive Order 13132 does not apply to this proposed rule, EPA did consult with representatives of various State and local governments in developing this rule. EPA has also consulted with representatives from the National Association of Clean Air Agencies (NACAA, representing state and local air pollution officials), Northeast States for Coordinated Air Use Management (NESCAUM, the Clean Air Association of the Northeast States), and the Ozone Transport Commission (OTC, a multi-state organization created under the CAA responsible for advising EPA on transport issues and for developing and implementing regional solutions to the ground-level ozone problem in the Northeast and Mid-Atlantic regions).

In the spirit of Executive Order 13132, and consistent with EPA policy to promote communications between EPA and State and local governments, EPA specifically solicits comment on this proposed action from State and local officials.

F. Executive Order 13175: Consultation and Coordination With Indian Tribal Governments

This action does not have tribal implications, as specified in Executive Order 13175 (65 FR 67249, November 9, 2000). This proposed rule would be implemented at the Federal level and would impose compliance costs only on those in the gasoline production, distribution, and additive industry and in the highway and nonroad engine, vehicle, and equipment industries. Tribal governments would be affected only to the extent they purchase and use regulated fuels, vehicles, and equipment. Thus, Executive Order 13175 does not apply to this action.

Although Executive Order 13175 does not apply to this action, EPA specifically solicits additional comment on this proposed action from tribal officials.

G. Executive Order 13045: Protection of Children From Environmental Health Risks and Safety Risks

This action is subject to EO 13045 (62 FR 19885, April 23, 1997) because it is an economically significant regulatory action as defined by EO 12866, and EPA believes that the environmental health or safety risk addressed by this action may have a disproportionate effect on children. Accordingly, we have evaluated the environmental health or safety effects of air pollutants affected by the proposed standards on children. The results of this evaluation are contained in Section II.B and associated references.

Children are more susceptible than adults to many air pollutants because of differences in physiology, higher per body weight breathing rates and consumption, rapid development of the brain and bodily systems, and behaviors that increase chances for exposure. Even before birth, the developing fetus may be exposed to air pollutants through the mother that affect development and permanently harm the individual.

Infants and children breathe at much higher rates per body weight than adults, with infants under one year of age having a breathing rate up to five times that of adults.[510] In addition, children breathe through their mouths more than adults and their nasal passages are less effective at removing pollutants, which leads to a higher deposition fraction in their lungs.[511]

Certain motor vehicle emissions present greater risks to children as well. For example, mutagenic carcinogens such as benzene and 1,3-butadiene have a larger impact during young life stages, given the rapid development of the corporal systems.[512] Exposure at a young age to these carcinogens could lead to a higher risk of developing cancer later in life.

The adverse effects of individual air pollutants may be more severe for children, particularly the youngest age groups, than adults. The Integrated Science Assessments and Criteria Documents for a number of pollutants affected by this rule, including those for NO_2, PM, ozone and CO, describe children as a group with greater susceptibility. Section II.B.5 discusses a number of childhood health outcomes associated with proximity to roadways, including evidence for exacerbation of asthma symptoms and suggestive evidence for new onset asthma. In general, these studies do not identify the specific contaminants associated with adverse effects, instead addressing the near-roadway environment as one containing numerous exposures potentially associated with adverse health effects.

In addition to their underlying biological susceptibility, as discussed in Section II.B.1, children may be more vulnerable to the effects of air pollution because of their high levels of outdoor activity. As discussed in that section, greater impacts of ozone have been reported among children who are more active outdoors.

Section III.C describes the ambient air quality changes resulting from the proposed standards, which represent levels to which the general population is exposed. Children are not expected to experience greater ambient concentrations of air pollutants than the general population. However, because of their greater susceptibility to air pollution and their increased time spent outdoors, it is likely that the proposed standards would have particular benefits for children's health.

The public is invited to submit comments or identify peer-reviewed studies and data that assess effects of early life exposure to the air pollutants affected by the proposed standards.

H. Executive Order 13211: Actions Concerning Regulations That Significantly Affect Energy Supply, Distribution, or Use

Executive Order 13211, ''Actions Concerning Regulations That Significantly Affect Energy Supply, Distribution, or Use'' (66 FR 28355 (May 22, 2001)), requires EPA to prepare and submit a Statement of Energy Effects to the Administrator of the Office of Information and Regulatory Affairs, Office of Management and Budget, for certain actions identified as ''significant energy actions.'' Section 4(b) of Executive Order 13211 defines ''significant energy actions'' as ''any action by an agency (normally published in the **Federal Register**) that promulgates or is expected to lead to the promulgation of a final rule or regulation, including notices of inquiry, advance notices of proposed rulemaking, and notices of proposed rulemaking: (1)(i) That is a significant regulatory action under Executive Order 12866 or any successor order, and (ii) is likely to have a significant adverse effect on the supply, distribution, or use of energy; or (2) that is designated by the Administrator of the Office of Information and Regulatory Affairs as a significant energy action.'' Given the flexibilities being proposed for entities in the gasoline production and distribution system, we believe that these mitigate any potential adverse effects on gasoline supply and distribution. Although EPA does not expect this rule to have significant adverse effects on the supply or distribution of gasoline, we have prepared a Statement of Energy Effects for this action as follows.

This proposal's potential effects on energy supply, distribution, or use have been analyzed and are further discussed above in:

- Section V—fuel provisions of the proposed rule and flexibilities, including hardship provisions.
- Section V.2.c—discussion on proposed refinery lead time.
- Section X—proposed economic impacts (specifically, Section X.C for fuel economic impacts, and Section X.D on employment impacts).
- Section VII.B—estimated costs of the proposed fuel program.

Given the estimated costs and impacts of the proposed rule, as discussed in these areas of this preamble, we do not expect this rule to have any adverse effect on the supply or distribution of gasoline. Further, we do not believe that there are any reasonable alternatives to the control of sulfur in gasoline which would provide the level of reduction of emissions, considering cost-benefit analyses, given by the reduction in sulfur being proposed in this rule.

I. National Technology Transfer and Advancement Act

Section 12(d) of the National Technology Transfer and Advancement Act of 1995 (''NTTAA''), Public Law 104–113 (15 U.S.C. 272 note) directs EPA to use voluntary consensus standards in its regulatory activities unless to do so would be inconsistent with applicable law or otherwise impractical. Voluntary consensus standards are technical standards (e.g., materials specifications, test methods, sampling procedures, and business practices) that are developed or adopted by voluntary consensus standards bodies. NTTAA directs EPA to provide Congress, through OMB, explanations when the Agency decides not to use available and applicable voluntary consensus standards.

[510] U.S. Environmental Protection Agency. (2009). Metabolically-derived ventilation rates: A revised approach based upon oxygen consumption rates. Washington, DC: Office of Research and Development. EPA/600/R–06/129F. *http://cfpub.epa.gov/ncea/cfm/recordisplay.cfm?deid=202543.*

[511] Foos, B.; Marty, M.; Schwartz, J.; Bennet, W.; Moya, J.; Jarabek, A.M.; Salmon, A.G. (2008) Focusing on children's inhalation dosimetry and health effects for risk assessment: An introduction. J Toxicol Environ Health 71A: 149–165.

[512] U.S. Environmental Protection Agency. (2005). Supplemental guidance for assessing susceptibility from early-life exposure to carcinogens. Washington, DC: Risk Assessment Forum. EPA/630/R–03/003F. *http://www.epa.gov/raf/publications/pdfs/childrens_supplement_final.pdf.*

This proposed rulemaking involves technical standards. EPA is proposing to update a number of regulations which already contain voluntary consensus standards to more recent versions of these standards. EPA is proposing to use the ASTM International (ASTM) standards listed in Table XII–1 below. The standards may be obtained through the ASTM Web site (*www.astm.org*) or by calling ASTM at (610) 832–9585.

This proposed rulemaking also involves environmental monitoring or measurement. Consistent with the Agency's Performance Based Measurement System (''PBMS''), EPA proposes not to require the use of specific, prescribed analytic methods. Rather, the Agency plans to allow the use of any method that meets the prescribed performance criteria. The PBMS approach is intended to be more flexible and cost-effective for the regulated community; it is also intended to encourage innovation in analytical technology and improved data quality. EPA is not precluding the use of any method, whether it constitutes a voluntary consensus standard or not, as long as it meets the performance criteria specified.

TABLE XII–1—DESIGNATED ANALYTICAL TEST METHODS FOR GASOLINE AND DIESEL FUEL

Fuel parameter	Designated analytical method
Sulfur in gasoline	ASTM D 2622–05.
Sulfur in butane	ASTM D 6667–01.
500 ppm Sulfur Diesel Fuel	ASTM D 2622–05.
Olefins in gasoline	ASTM 1319–03 ε^1.
Reid vapor pressure (RVP) in gasoline	ASTM D 5191–07, with the following correlation equation: RVP psi = (0.956 * X) − 0.347 RVP kPa = (0.956 * X) − 2.39 where: X = total measured vapor pressure in psi or kPa.
Distillation in gasoline	ASTM D86–07b.
Benzene in gasoline	ASTM D 3606–07, except that instrument parameters shall be adjusted to ensure complete resolution of benzene, ethanol, and methanol peaks.
Aromatics in gasoline	ASTM D 5769–04, except that sample chilling requirements in section 8 of this standard are optional.
Oxygen and oxygenate content in gasoline	ASTM D 5599–00(2005).
Aromatics in diesel fuel	ASTM D1319–03 ε^1.

EPA welcomes comments on this aspect of the proposed rulemaking and, specifically, invites the public to identify potentially-applicable voluntary consensus standards and to explain why such standards should be used in this regulation.

J. Executive Order 12898: Federal Actions To Address Environmental Justice in Minority Populations and Low-Income Populations

Executive Order (EO) 12898 (59 FR 7629 (Feb. 16, 1994)) establishes federal executive policy on environmental justice. Its main provision directs federal agencies, to the greatest extent practicable and permitted by law, to make environmental justice part of their mission by identifying and addressing, as appropriate, disproportionately high and adverse human health or environmental effects of their programs, policies, and activities on minority populations and low-income populations in the United States.

EPA has determined that this proposed rule would not have disproportionately high and adverse human health or environmental effects on minority or low-income populations because it increases the level of environmental protection for all affected populations without having any disproportionately high and adverse human health or environmental effects on any population, including any minority or low-income population.

This proposed rule would reduce emissions from all vehicles across the nation, both new vehicles (beginning in model year 2017, when the vehicle standards start to apply) and existing vehicles (as soon as the lower-sulfur gasoline becomes available in 2017 or earlier). As such, this proposal would increase the level of environmental protection for all populations. As discussed in Section III.B.7, there is evidence that minority populations and low-income populations live disproportionately near high-traffic roadways, where concentrations of many air pollutants are elevated. We expect this proposed rule to increase the level of environmental protection for these populations.

Thus, this proposed rule would not have a disproportionately high adverse human health or environmental effect on minority or low-income populations.

XIII. Statutory Provisions and Legal Authority

Statutory authority for this action comes from sections 202, 203–209, 211, 213, 216, and 301 of the Clean Air Act, 42 U.S.C. sections 7414, 7521, 7522–7525, 7541, 7542, 7543, 7545, 7547, 7550, and 7601. Additional support for the procedural and compliance related aspects of this proposal, including the proposed recordkeeping requirements, comes from sections 114, 208, and 301(a) of the Clean Air Act, 42 U.S.C. sections 7414, 7542, and 7601(a).

List of Subjects

40 CFR Part 79

Environmental protection, Administrative practice and procedure, Air pollution control, Confidential business information, Diesel fuel, Energy, Fuel additives, Gasoline, Motor vehicle pollution, Penalties, Petroleum, Reporting and recordkeeping requirements.

40 CFR Part 80

Environmental protection, Administrative practice and procedure, Air pollution control, Confidential business information, Diesel fuel, Fuel additives, Gasoline, Imports, Incorporation by reference, Labeling, Motor vehicle pollution, Penalties, Petroleum, Reporting and recordkeeping requirements.

40 CFR Part 85

Environmental protection, Administrative practice and procedure, Air pollution control, Confidential business information, Imports, Incorporation by reference, Labeling, Motor vehicle pollution, Reporting and recordkeeping requirements, Research, Warranties.

40 CFR Part 86

Environmental protection, Administrative practice and procedure, Air pollution control, Confidential business information, Imports, Incorporation by reference, Labeling, Motor vehicle pollution, Reporting and recordkeeping requirements, Warranties.

40 CFR Part 600

Administrative practice and procedure, Electric power, Fuel economy, Incorporation by reference, Labeling, Reporting and recordkeeping requirements.

40 CFR Parts 1036 and 1037

Administrative practice and procedure, Air pollution control, Confidential business information, Environmental protection, Incorporation by reference, Labeling, Motor vehicle pollution, Reporting and recordkeeping requirements, Warranties.

40 CFR Parts 1065 and 1066

Environmental protection, Administrative practice and procedure, Incorporation by reference, Reporting and recordkeeping requirements, Research.

Dated: March 29, 2013.

Bob Perciasepe,

Acting Administrator.

For the reasons set forth in the preamble, title 40, chapter I of the Code of Federal Regulations is proposed to be amended as follows:

PART 79—REGISTRATION OF FUEL AND FUEL ADDITIVES

■ 1. The authority citation for part 79 continues to read as follows:

Authority: 42 USC 7414, 7524, 7545, and 7601.

■ 2. Section 79.5 is amended by:

■ a. Revising paragraph (a).

■ b. Revising paragraph (b) introductory text.

§ 79.5 Periodic reporting requirements.

(a) *Fuel manufacturers.* (1) For each calendar quarter (January through March, April through June, July through September, October through December) commencing after the date prescribed for a particular fuel in subpart D of this part, fuel manufacturers shall submit to the Administrator a report for each registered fuel showing the range of concentration of each additive reported under § 79.11(a) and the volume of such fuel produced in the quarter. Reports shall be submitted by the required deadline as shown in Table 1 to § 79.5 on forms supplied by the Administrator upon request.

TABLE 1 TO § 79.5—QUARTERLY REPORTING DEADLINES

Calendar quarter	Time period covered	Quarterly report deadline
Quarter One	January 1–March 31	June 1.
Quarter Two	April 1–June 30	September 1.
Quarter Three	July 1–September 30	December 1.
Quarter Four	October 1–December 31	March 31.

(2) Fuel manufacturers shall submit to the Administrator a report annually for each registered fuel providing additional data and information as specified in paragraphs (c) and (d) of this section in the designation of the fuel in subpart D of this part. Reports shall be submitted by March 31 for the preceding year, or part thereof, on forms supplied by the Administrator upon request. If the date prescribed for a particular fuel in 40 CFR part 80 subpart D, or the later registration of a fuel is between October 1 and December 31, no report will be required for the period to the end of that year.

(b) *Additive manufacturers.* Additive manufacturers shall submit to the Administrator a report annually for each registered additive providing additional data and information as specified in paragraphs (c) and (d) of this section in the designation of the additive in 40 CFR part 80 subpart D. Additive manufacturers shall also report annually the volume of each additive produced. Reports shall be submitted by March 31 for the preceding year, or part thereof, on forms supplied by the Administrator upon request. If the date prescribed for a particular additive in 40 CFR part 80 subpart D, or the later registration of an additive is between October 1 and December 31, no report will be required for the period to the end of that year. These periodic reports shall not, however, be required for any additive that is:

* * * * *

PART 80—REGULATION OF FUEL AND FUEL ADDITIVES

■ 3. The authority citation for part 80 is revised to read as follows:

Authority: 42 U.S.C., 7414, 7521(l), 7545, and 7601(a).

■ 4. Section 80.2 is amended by:

■ a. Revising paragraph (d).

■ b. Revising paragraph (w).

■ c. Revising paragraph (z).

■ d. Adding paragraphs (vvv), (www), (xxx), (yyy), (zzz), and (aaaa).

§ 80.2 Definitions.

* * * * *

(d) *Previously certified gasoline,* or PCG, means gasoline, RBOB or CBOB that previously has been included in a batch of gasoline for purposes of complying with the standards of 40 CFR part 80 that apply to refiners and importers.

* * * * *

(w) *Cetane index* or *''Calculated cetane index''* is a number representing the ignition properties of diesel fuel oils from API gravity and mid-boiling point, as determined by ASTM International standard method D976–06(2011), entitled, ''Standard Test Method for Calculated Cetane Index of Distillate Fuels'', approved October 1, 2011. ASTM International test method D976–06(2011) is incorporated by reference. This incorporation by reference was approved by the Director of the Federal Register in accordance with 5 U.S.C. 552(a) and 1 CFR part 51. Copies may be obtained from ASTM International, 100 Barr Harbor Dr., West Conshohocken, PA 19428–2959. Copies may be inspected at the Air Docket, EPA/DC, EPA West, Room B102, 1301 Constitution Ave. NW., Washington, DC, or at the National Archives and Records Administration (NARA). For information on the availability of this material at NARA, call 202–741–6030 or go to: *http://www.archives.gov/federal_register/code_of_federal_regulations/ibr_locations.html.*

* * * * *

(z) *Aromatic content* is the aromatic hydrocarbon content in volume percent as determined by ASTM International standard test method D1319–10, entitled, ''Standard Test Method for

Hydrocarbon Types in Liquid Petroleum Products by Fluorescent Indicator Adsorption'', approved May 1, 2010. ASTM International test method D1319–10 is incorporated by reference. This incorporation by reference was approved by the Director of the Federal Register in accordance with 5 U.S.C. 552(a) and 1 CFR part 51. Copies may be obtained from ASTM International, 100 Barr Harbor Dr., West Conshohocken, PA 19428–2959. Copies may be inspected at the Air Docket, EPA/DC, EPA West, Room B102, 1301 Constitution Ave. NW., Washington, DC, or at the National Archives and Records Administration (NARA). For information on the availability of this material at NARA, call 202–741–6030 or go to: *http://www.archives.gov/federal_register/code_of_federal_regulations/ibr_locations.html.*

* * * * *

(vvv) *Denatured fuel ethanol (DFE)* means an alcohol of the chemical formula C_2H_6O which contains a denaturant to make it unfit for human consumption, that is used as an additive in gasoline, and that meets the requirements of § 80.1610.

(www) *Oxygenate manufacturer* means any person who owns, leases, operates, controls, or supervises an oxygenate production facility.

(xxx) *Oxygenate production facility* means any facility where oxygenate is produced.

(yyy) *CBOB* means gasoline blendstock that becomes conventional gasoline solely upon the addition of oxygenate.

(zzz) *Natural gas liquids (NGL)* means the components of natural gas (primarily propane, butane, pentane, hexane, and heptane) that are separated from the gas state in the form of liquids in a natural gas production facility, in a gas processing plant, or in a natural gas pipeline. NGL is sometimes also referred to as ''natural gasoline''.

(aaaa) *Natural gas* means a mixture of hydrocarbon gases that occurs with petroleum deposits, principally methane together with varying quantities of ethane, propane, butane, and other gases.

5. Section 80.8 is revised to read as follows:

§ 80.8 Sampling methods for gasoline, diesel fuel, fuel additives, and renewable fuels.

The sampling methods specified in this section shall be used to collect samples of gasoline, diesel, fuel additives and renewable fuels for purposes of determining compliance with the requirements of this part.

(a) *Manual sampling.* Manual sampling of tanks and pipelines shall be performed according to the applicable procedures specified in ASTM International (ASTM) standard practice D4057 (incorporated by reference, see paragraph (e) of this section).

(b) *Automatic sampling.* Automatic sampling of petroleum products in pipelines shall be performed according to the applicable procedures specified in ASTM International (ASTM) standard practice D4177 (incorporated by reference, see paragraph (e) of this section).

(c) *Sampling and sample handling for volatility measurement.* Samples to be analyzed for Reid Vapor Pressure (RVP) shall be collected and handled according to the applicable procedures in ASTM standard practice D5842 (incorporated by reference, see paragraph (e) of this section).

(d) *Sample compositing.* Composite samples shall be prepared using the applicable procedures in ASTM standard practice D5854 (incorporated by reference, see paragraph (e) of this section).

(e) *Materials incorporated by reference.* The Director of the Federal Register approved the incorporation by reference of the documents listed in this section as prescribed in 5 U.S.C. 552(a) and 1 CFR part 51. Anyone may inspect copies at the U.S. EPA, Air and Radiation Docket and Information Center, 1301 Constitution Ave. NW., Room B102, EPA West Building, Washington, DC 20460, under EPA docket ID Number EPA–HQ–OAR–2011–0135, or at the National Archives and Records Administration (NARA). The telephone number for the Air Docket Public Reading Room is (202) 566–1742. For information on the availability of this material at NARA, call 202–741–6030 or go to: *http://www.archives.gov//federal_register/code_of_federal_regulations/ibr_locations.html.* For further information on these test methods, please contact the Environmental Protection Agency at 734–214–4582.

(1) *ASTM International material.* Anyone may purchase copies of these materials from the ASTM International, 100 Barr Harbor Dr., West Conshohocken, PA 19428–2959, or by contacting ASTM International customer service at 10–832–9585, or by contacting the email address of *service@astm.org* from the ASTM International Web site of *http://www.astm.org*.

(i) ASTM International standard practice D4057–06 (Reapproved 2011) (''ASTM International D4057''), Standard practice for Manual Sampling of Petroleum and Petroleum Products, approved June 1, 2011.

(ii) ASTM International standard practice D4177–95 (Reapproved 2010) (''ASTM International D4177''), Standard Practice for Automatic Sampling of Petroleum and Petroleum Products, approved May 1, 2010.

(iii) ASTM International standard practice D5842–04 (Reapproved 2009) (''ASTM International D5842''), Standard Practice for Sampling and Handling of Fuels for Volatility Measurement, approved June 1, 2009.

(iv) ASTM International standard practice D5854–96 (Reapproved 2010) (''ASTM International D5854''), Standard Practice for Mixing and Handling of Liquid Samples of Petroleum and Petroleum Products, approved May 1, 2010.

(2) [Reserved]

■ 6. A new § 80.10 is added to subpart A to read as follows:

§ 80.10 Correction of batch volume reports.

For purposes of compliance with the reporting requirements of this part, parties required to submit batch reports are not required to correct unintentional errors in reporting batch volume on previously submitted batch reports where all of the following circumstances apply:

(a) The reporting violation pertains solely to the volume of the batch.

(b) The volume of the batch is incorrect by no more than 500 gallons or by no more than 1 percent of the true batch volume, in gallons, whichever value (in gallons) is less.

(c) Reporting the true volumes of all the batches for the reporting period would not result in a higher annual average sulfur or benzene value than reported using the incorrect values after rounding to the applicable digit for reporting.

(d) Reporting the true value for any batch would not result in a reduced number of gallons for a violation of any per-gallon standard or a violation of any other requirement of the Clean Air Act.

(e) The reporting party certifies that the conditions in paragraphs (a) through (d) of this section have been met.

(f) For subpart M of this part, this section applies only to the volume of fuels produced or exported that result in a renewable volume obligation under subpart M of this part for obligated parties.

■ 7a. Section 80.46 is amended by:

■ a. Revising the section heading.

■ b. Revising paragraphs (a)(1), (a)(2), (a)(3), and (a)(4).

■ c. Revising paragraphs (b)(1) and (b)(2)(i) introductory text.

■ d. Revising paragraph (c).
■ e. Revising paragraph (d).
■ f. Revising paragraphs (e)(1) and (e)(2), and adding a new paragraph (e)(3).
■ g. Revising paragraphs (f)(1) and (f)(3)(i).
■ h. Revising paragraphs (g)(1) and (g)(2)(i).
■ i. Revising paragraph (h) introductory text and paragraph (h)(1).

§ 80.46 Measurement of reformulated gasoline and conventional gasoline fuel parameters.

(a) * * *

(1) Through November 29, 2014, the sulfur content of gasoline must be determined by ASTM International standard method D2622 (incorporated by reference, see paragraph (h) of this section) or by one of the alternative test methods specified in paragraph (a)(3) of this section. Beginning November 30, 2014, the sulfur content of gasoline must be determined by a test method approved under § 80.47.

(2) Through November 29, 2014, the sulfur content of butane must be determined by ASTM International standard method D6667 (incorporated by reference, see paragraph (h) of this section) or by one of the alternative test methods specified in paragraph (a)(4) of this section.

(3) Through November 29, 2014, any refiner or importer may use any of the following methods for determining the sulfur content of gasoline provided the refiner or importer test result is correlated with the method specified in paragraph (a)(1) of this section:

(i) ASTM International standard test method D5453 (incorporated by reference, see paragraph (h) of this section).

(ii) ASTM International standard test method D6920 (incorporated by reference, see paragraph (h) of this section).

(iii) ASTM International standard test method D3120 (incorporated by reference, see paragraph (h) of this section).

(iv) ASTM International standard test method D7039 (incorporated by reference, see paragraph (h) of this section).

(4) Beginning November 30, 2014, the sulfur content of butane must be determined by a test method approved under § 80.47. Through November 29, 2014, any refiner or importer may determine the sulfur content of butane using any one of the following methods; provided the refiner or importer test result is correlated with the method specified in paragraph (a)(2) of this section:

(i) ASTM International standard method D4468 (incorporated by reference, see paragraph (h) of this section).

(ii) ASTM International standard method D3246 (incorporated by reference, see paragraph (h) of this section).

(b) * * *

(1) Through November 29, 2014, olefin content must be determined using ASTM International standard method D1319 (incorporated by reference, see paragraph (h) of this section). Beginning November 30, 2014, the olefin content of gasoline may be determined by a test method approved under § 80.47.

(2)(i) Through November 29, 2014, any refiner or importer may determine olefin content using ASTM International standard method ASTM D6550 (incorporated by reference, see paragraph (h) of this section) for purposes of meeting any testing requirements involving olefin content, provided that:

* * * * *

(c) *Reid Vapor Pressure (RVP).* (1) Through November 29, 2014, Reid Vapor Pressure must be determined using ASTM International standard method D5191 (incorporated by reference, see paragraph (h) of this section), except the following correction equation must be used:

$$\text{RVP psi} = (0.956 * X) - 0.347$$
$$\text{RVP kPa} = 0.956 * X) - 2.39$$

Where:

X = Total measured vapor pressure, in psi or kPa.

(2) Beginning November 30, 2014, RVP may be determined by a test method approved under § 80.47.

(d) *Distillation.* Through November 29, 2014, distillation parameters must be determined using ASTM International standard method D86 ((incorporated by reference, see paragraph (h) of this section). Beginning November 30, 2014, the distillation parameters may be determined by a test method approved under § 80.47.

(e) * * *

(1) Through November 29, 2014, benzene content must be determined using ASTM International standard method D3606 (incorporated by reference, see paragraph (h) of this section), except that:

(2) Instrument parameters shall be adjusted to ensure complete resolution of the benzene, ethanol and methanol peaks because ethanol and methanol may cause interference with ASTM International D3606 (incorporated by reference, see paragraph (h) of this section) when present.

(3) Beginning November 30, 2014, the benzene content may be determined by a test method approved under § 80.47.

(f)(1) Through November 29, 2014, aromatic content must be determined using ASTM International standard method D5769 (incorporated by reference, see paragraph (h) of this section), except the sample chilling requirements in section 8 of this standard method are optional. Beginning November 30, 2014, the aromatic content may be determined by a test method approved under § 80.47.

(2) * * *

(3)(i) Through November 29, 2014 any refiner or importer may determine aromatics content using ASTM International standard method D1319 (incorporated by reference, see paragraph (h) of this section) for the purposes of meeting any test requirement involving aromatic content; provided that:

* * * * *

(g) * * *

(1) Through November 29, 2014, oxygen and oxygenate content must be determined using ASTM International standard method D5599 (incorporated by reference, see paragraph (h) of this section). Beginning November 30, 2014, oxygen and oxygenate content may be determined by a test method approved under § 80.47.

(2)(i) Through November 29, 2014, when oxygenates present are limited to MTBE, ETBE, TAME, DIPE, tertiary-amyl alcohol and C1 to C4 alcohols, any refiner, importer, or oxygenate blender may determine oxygen and oxygen content using ASTM International standard method D4815 (incorporated by reference, see paragraph (h) of this section) for purposes of meeting any testing requirement; provided that:

* * * * *

(h) *Materials incorporated by reference.* The Director of the Federal Register approved the incorporation by reference of the documents listed in this section as prescribed in 5 U.S.C. 552(a) and 1 CFR 51. Anyone may inspect copies at the U.S. EPA, Air and Radiation Docket and Information Center, 1301 Constitution Ave. NW., Room B102, EPA West Building, Washington, DC, 20460, under EPA docket ID Number EPA–HQ–OAR–2011–0135, or at the National Archives and Records Administration (NARA). The telephone number for the Air Docket Public Reading Room is (202) 566–1742. For information on the availability of this material at NARA, call (202) 741–6030 or go to: *http://www.archives.gov//federal_register/code_of_federal_regulations/ibr_locations.html.* For further information on these test methods,

please contact the Environmental Protection Agency at 734–214–4582.

(1) *ASTM International material.* Anyone may purchase copies of these materials from the ASTM International, 100 Barr Harbor Dr., West Conshohocken, PA 19428–2959, or by contacting ASTM International customer service at 10–832–9585, or by contacting the email address of *service@astm.org* from the ASTM International Web site of *http://www.astm.org*.

(i) ASTM International standard method D3606–10 (''ASTM International D3606''), ''Standard Test Method for Determination of Benzene and Toluene in Finished Motor and Aviation Gasoline by Gas Chromatography, approved October 1, 2010.

(ii) ASTM International standard method D1319–10 (''ASTM International D1319''), ''Standard Test Method for Hydrocarbon Types in Liquid Petroleum Products by Fluorescent Indicator Absorption'', approved May 1, 2010.

(iii) ASTM International standard method D6550–10 (''ASTM International D6550''), ''Standard Test Method for the Determination of Olefin Content of Gasolines by Supercritical-Fluid Chromatography'', approved October 1, 2010.

(iv) ASTM International standard method D4815–09 (''ASTM International D4815''), ''Standard Test Method for Determination of MTBE, ETBE, TAME, DIPE, tertiary-Amyl Alcohol and C_1 to C_4 Alcohols in Gasoline by Gas Chromatography'', approved October 1, 2009.

(v) ASTM International standard method D2622–10 (''ASTM International D2622''), ''Standard Test Method for Sulfur in Petroleum Products by Wavelength Dispersive X-Ray Fluorescence Spectrometry'', approved February 15, 2010.

(vi) ASTM International standard method D2622–10 (''ASTM International D2622''), ''Standard Test Method for Sulfur in Petroleum Products by Wavelength Dispersive X-Ray Fluorescence Spectrometry'', approved February 15, 2010.

(vii) ASTM International standard method D3246–11 (''ASTM International D3246''), ''Standard Test Method for Sulfur in Petroleum Gas by Oxidative Microcoulometry'', approved June 1, 2011.

(viii) ASTM International standard method D5599–00(2010) (''ASTM International D5599''), ''Standard Test Method for Determination of Oxygenates in Gasoline by Gas Chromatography and Oxygen Selective Flame Ionization Detection'', approved October 1, 2010.

(ix) ASTM International standard method D5769–10 (''ASTM International D5769''), ''Standard Test Method for Determination of Oxygenates in Gasoline by Gas Chromatography and Oxygen Selective Flame Ionization Detection'', approved October 1, 2010.

(x) ASTM International standard method D86–11a (''ASTM International D86''), ''Standard Test Method for Determination of Petroleum Products at Atmospheric Pressure'', approved July 1, 2011.

(xi) ASTM International standard method D5453–09 (''ASTM International D5453''), ''Standard Test Method for Determination of Total Sulfur in Light Hydrocarbons, Spark Ignition Engine Fuel, Diesel Engine Fuel, and Engine Oil by Ultraviolet Fluorescence'', approved June 15, 2009.

(xii) ASTM International standard method D6920–07 (''ASTM D6920''), Standard Test Method for Total Sulfur in Naphthas, Distillates, Reformulated Gasolines, Diesels, Biodiesels, and Motor Fuels by Oxidative Combustion and Electrochemical Detection, approved December 1, 2007.

(xiii) ASTM International standard method D3120–08 (''ASTM International D3120''), ''Standard Test Method for Trace Quantities of Sulfur in Light Petroleum Hydrocarbons by Oxidative Microcoulometry'', approved December 15, 2008.

(xiv) ASTM International standard method D7039–07 (''ASTM D7039''), Standard Test Method for Sulfur in Gasoline and Diesel Fuel by Monochromatic Wavelength Dispersive X-ray Fluorescence Spectrometry, approved May 1, 2007.

(xv) ASTM International standard method D6667–10 (''ASTM International D6667''), ''Standard Test Method for Determination of Total Volatile Sulfur in Gaseous Hydrocarbons and Liquefied Petroleum Gases by Ultraviolet Fluorescence'', approved October 1, 2010.

(xvi) ASTM International standard method D4468–85(2006) (''ASTM International D4468''), ''Standard Test Method for Total Sulfur in Gaseous Fuels by Hydrogenolysis and Rateometric Colorimetry'', approved June 1, 2006.

* * * * *

■ 7b. Section 80.47 is added to read as follows:

§ 80.47 Performance-based Analytical Test Method Approach.

All sample handling, testing procedures and tests must be conducted using good laboratory practices.

(a) *Definitions.* As used in this subpart:

(1) *Performance-based Analytical Test Method Approach* means a measurement system based upon established performance criteria for accuracy and precision with use of analytical test methods. As used in this subpart, a measurement system used by laboratories to demonstrate that a particular analytical test method is acceptable for demonstrating compliance.

(2) *Accuracy* means the closeness of agreement between an observed value from a single test measurement and an accepted reference value.

(3) *Precision* means the degree of agreement in a set of measurements performed on the same property of identical test material.

(4) *Absolute fuel parameter* means a fuel parameter for which a gravimetric standard is practical to construct and use. Sulfur content of gasoline, butane, or diesel fuel are examples of an absolute fuel parameter.

(5) *Gravimetric standard* means a test material made by adding a carefully weighed quantity of the analyte to a measured quantity of another substance known not to contain any of the analyte, resulting in a solution with an accurately known concentrate of the analyte.

(6) *Consensus named fuels* are homogeneous quantities of fuel that have been analyzed by a number of different laboratories (by sending around small samples). The average concentration of some parameter of interest across all of the different laboratories is then used as the ''consensus name'' for that material.

(7) *Locally-named reference materials* are gasoline or diesel fuels that are usually from the regular production of the facility where they are used in laboratory quality control efforts and have been analyzed using the designated method (either by the facility's lab or by a referee lab) to obtain an estimate of their concentration.

(8) *Method-defined fuel parameter* means a fuel parameter for which an EPA-prescribed primary test method or designated method defines the regulatory standard. Examples of method-defined fuel parameters include olefin content in gasoline, Reid vapor pressure (RVP) of gasoline, distillation parameters of gasoline, benzene content of gasoline, aromatic content of gasoline

and diesel fuel, and oxygen/oxygenates content of gasoline.

(9) *Reference Installations* are designated test method installations that are used to qualify the accuracy of other method-defined parameter instruments. Reference installations of the designated test method will be used to evaluate the accuracy of other method-defined alternative test methods and to establish correlation equations if necessary.

(10) *Correlation equation* is a correction equation as determined by the use of ASTM International standard practice D6708 (incorporated by reference, see paragraph (r) of this section). This standard practice determines whether the comparison between the alternative test method and the designated test method is a null result. If the comparison is not null, then the standard practice provides for a correlation equation that predicts designated test method results from the applicable method-defined alternative test method.

(11) *Statistical quality control (SQC)* means a planned system of activities whose purpose is to provide a level of quality that meets the needs of compliance with the standards of this part. This subpart prescribes specific SQC requirements for both absolute and method driven fuel parameters for both VCSB and non-VCSB regulated parties.

(12) *Voluntary consensus-based standards body (VCSB)* means a domestic or international organization that plans, develops, establishes, or coordinates voluntary consensus standards using agreed-upon procedures and which possesses the attributes of openness, balance of interest, due process, and consensus, as explained in OMB Circular A–119 and the National Technology Transfer and Advancement Act of 1995, P.L. 104–113, sec. 12(d).

(13) *Non-Voluntary consensus-based standards body (non-VCSB)* means a domestic or international regulated party who has developed a proprietary analytical test method that has not been adopted by a VCSB organization.

(b) *Precision and accuracy criteria for approval for the absolute fuel parameter of gasoline sulfur.* (1) *Precision.* Beginning November 30, 2014, for motor vehicle gasoline and gasoline fuel additives subject to the gasoline sulfur standard at § 80.195 and § 80.1603, the maximum allowable standard deviation computed from the results of a minimum of 20 tests made over 20 days (7 or fewer tests per week and 2 or fewer tests per day) on samples using good laboratory practices taken from a single homogeneous commercially available gasoline must be less than or equal to 1.5 times the repeatability ''r'' divided by 2.77, where ''r'' equals the ASTM repeatability of ASTM D7039–07 (Example: A 10ppm sulfur gasoline sample: maximum allowable standard deviation of 20 tests ≤ 1.5*(1.75ppm/2.77)=0.95 ppm). The 20 results must be a series of tests with a sequential record of analysis and no emissions. A laboratory facility may exclude a given sample or test result only if the exclusion is for a valid reason under good laboratory practices and it maintains records regarding the sample and test results and the reason for excluding them.

(2) *Accuracy.* Beginning November 30, 2014, for motor vehicle gasoline and gasoline fuel additives subject to the gasoline sulfur standard at §§ 80.195 and 80.1603:

(i) The arithmetic average of a continuous series of at least 10 tests performed using good laboratory practices on a commercially available gravimetric sulfur standard in the range of 1–10 ppm shall not differ from the accepted reference value (ARV) of the standard by more than 0.71 ppm sulfur;

(ii) The arithmetic average of a continuous series of at least 10 tests performed using good laboratory practices on a commercially available gravimetric sulfur standard in the range of 10–20 ppm shall not differ from the ARV of the standard by more than 1.00 ppm sulfur; and

(iii) In applying the tests of paragraphs (b)(2)(i) and (ii) of this section, individual test results shall be compensated for any known chemical interferences using good laboratory practices.

(3) The test method specified at § 80.46(a)(1) and in use prior to May 30, 2014 is exempt from the requirements of paragraphs (b)(1) and (2) of this section.

(c) *Precision and accuracy criteria for approval of the absolute fuel parameter of sulfur in butane.* (1) *Precision.* Beginning November 30, 2014, for butane subject to the butane sulfur standard at §§ 80.82, 80.195, 80.340(b), and 80.1603, the maximum allowable standard deviation computed from the results of a minimum of 20 tests made over 20 days (7 or fewer tests per week and 2 or fewer tests per day) on samples using good laboratory practices taken from a single homogeneous commercially available butane must be less than or equal to 1.5 times the repeatability ''r'' divided by 2.77, where ''r'' equals the ASTM repeatability of ASTM D6667–10 (Example: A 10 ppm sulfur butane sample: maximum allowable standard deviation of 20 tests ≤ 1.5*(1.15ppm/2.77) = 0.62 ppm). The 20 results must be a series of tests with a sequential record of analysis and no emissions. A laboratory facility may exclude a given sample or test result only if the exclusion is for a valid reason under good laboratory practices and it maintains records regarding the sample and test results and the reason for excluding them.

(2) *Accuracy.* Beginning November 30, 2014, for butane subject to the butane sulfur standard at §§ 80.82 and 80.1603:

(i) The arithmetic average of a continuous series of at least 10 tests performed using good laboratory practices on a commercially available gravimetric sulfur standard in the range of 1–10 ppm shall not differ from the ARV of the standard by more than 0.47 ppm sulfur;

(ii) The arithmetic average of a continuous series of at least 10 tests performed using good laboratory practices on a commercially available gravimetric sulfur standard in the range of 10–20 ppm shall not differ from the ARV of the standard by more than 0.94 ppm sulfur; and

(iii) In applying the tests of paragraphs (c)(2)(i) and (ii) of this section, individual test results shall be compensated for any known chemical interferences using good laboratory practices.

(3) The test method specified at § 80.46(a)(2) and in use prior to May 30, 2014 is exempt from the requirements of paragraphs (c)(1) and (2) of this section.

(d) *Precision criteria for approval of the method defined fuel parameter of olefins in gasoline.* (1) *Precision.* Beginning November 30, 2014, for motor vehicle gasoline and gasoline fuel additives subject to the gasoline standards of this part, the maximum allowable standard deviation computed from the results of a minimum of 20 tests made over 20 days (7 or fewer tests per week and 2 or fewer tests per day) on samples using good laboratory practices taken from a single homogeneous commercially available gasoline must be less than or equal to 1.5 times the repeatability ''r'' divided by 2.77, where ''r'' equals the ASTM repeatability of ASTM D1319–10 (Example: A gasoline containing 9Vol% olefins: maximum allowable standard deviation of 20 tests ≤ 1.5*(0.972Vol%/2.77) = 0.53Vol%). The 20 results must be a series of tests with a sequential record of analysis and no emissions. A laboratory facility may exclude a given sample or test result only if the exclusion is for a valid reason under good laboratory practices and it maintains records regarding the sample and test results and the reason for excluding them.

(2) The test method specified at § 80.46(b)(1) and in use prior to May 30, 2014 is exempt from the requirements of paragraph (d)(1) of this section.

(e) *Precision criteria for approval of the method defined fuel parameter of aromatics in gasoline.* (1) *Precision.* Beginning November 30, 2014, for motor vehicle gasoline and gasoline fuel additives subject to the gasoline standards of this part, the maximum allowable standard deviation computed from the results of a minimum of 20 tests made over 20 days (7 or fewer tests per week and 2 or fewer tests per day) on samples using good laboratory practices taken from a single homogeneous commercially available gasoline must be less than or equal to 1.5 times the repeatability ''r'' divided by 2.77, where ''r'' equals the ASTM repeatability of ASTM D1319–10 (Example: A gasoline containing 32Vol% aromatics: maximum allowable standard deviation of 20 tests ≤ 1.5*(1.3Vol%/2.77) = 0.70Vol%). The 20 results must be a series of tests with a sequential record of analysis and no emissions. A laboratory facility may exclude a given sample or test result only if the exclusion is for a valid reason under good laboratory practices and it maintains records regarding the sample and test results and the reason for excluding them.

(2) The test method specified at § 80.46(f)(1) and in use prior to May 30, 2014 is exempt from the requirements of paragraph (e)(1) of this section.

(f) *Precision criteria for approval of the method defined fuel parameter of oxygen and oxygenate content in gasoline.* (1) *Precision.* Beginning November 30, 2014, for motor vehicle gasoline and gasoline fuel additives subject to the gasoline standards of this part, the maximum allowable standard deviation computed from the results of a minimum of 20 tests made over 20 days (7 or fewer tests per week and 2 or fewer tests per day) on samples using good laboratory practices taken from a single homogeneous commercially available gasoline must be less than or equal to 1.5 times the repeatability ''r'' divided by 2.77, where ''r'' equals the ASTM repeatability of ASTM 5599–00(2010) (Example: A gasoline containing 3Mass% total oxygen: maximum allowable standard deviation of 20 tests ≤ 1.5*(0.083Mass%/2.77) = 0.045Mass%). The 20 results must be a series of tests with a sequential record of analysis and no emissions. A laboratory facility may exclude a given sample or test result only if the exclusion is for a valid reason under good laboratory practices and it maintains records regarding the sample and test results and the reason for excluding them.

(2) The test method specified at § 80.46(g)(1) and in use prior to May 30, 2014 is exempt from the requirements of paragraph (f)(1) of this section.

(g) *Precision criteria for approval of the method defined fuel parameter of Reid Vapor Pressure (RVP) in gasoline.* (1) *Precision.* Beginning November 30, 2014, for motor vehicle gasoline and gasoline fuel additives subject to the gasoline standards of this part and the volatility standards at § 80.27, the maximum allowable standard deviation computed from the results of a minimum of 20 tests made over 20 days (7 or fewer tests per week and 2 or fewer tests per day) on samples using good laboratory practices taken from a single homogeneous commercially available gasoline must be less than or equal to 1.5 times the repeatability ''r'' divided by 2.77, where ''r'' equals the ASTM repeatability of ASTM 5191–10b (Example: A gasoline having a RVP of 6.8psi: maximum allowable standard deviation of 20 tests ≤ 1.5*(0.21psi/2.77) = 0.11psi). The 20 results must be a series of tests with a sequential record of analysis and no emissions. A laboratory facility may exclude a given sample or test result only if the exclusion is for a valid reason under good laboratory practices and it maintains records regarding the sample and test results and the reason for excluding them.

(2) The test method specified at § 80.46(c)(1) and in use prior to May 30, 2014 is exempt from the requirements of paragraph (g)(1) of this section.

(h) *Precision criteria for approval of the method defined fuel parameter of gasoline distillation.* (1) *Precision.* Beginning November 30, 2014, for motor vehicle gasoline and gasoline fuel additives subject to the gasoline standards of this part, the maximum allowable standard deviation computed from the results of a minimum of 20 tests made over 20 days (7 or fewer tests per week and 2 or fewer tests per day) on samples using good laboratory practices taken from a single homogeneous commercially available gasoline must be less than or equal to 1.5 times the repeatability ''r'' divided by 2.77, where ''r'' equals the ASTM repeatability of ASTM D86–11a for the initial boiling point, E10, E50, E90 and final boiling point. (Example: A gasoline having an initial boiling point of 20 °C and a final boiling point of 110 °C: Maximum allowable standard deviation of 20 tests for initial boiling point ≤ 1.5*(2.84 °C/2.77) = 1.54 °C, maximum allowable standard deviation of 20 tests for E10 ≤ 1.5*(1.33 °C/2.77) = 0.72 °C, maximum allowable standard deviation of 20 tests for E50 ≤ 1.5*(0.74 °C/2.77) = 0.40 °C, maximum allowable standard deviation of 20 tests for E90t ≤ 1.5*(1.79 °C/2.77) = 0.97 °C, and maximum allowable standard deviation of 20 tests for final boiling point ≤ 1.5*(3.33 °C/2.77) = 1.80 °C). The 20 results must be a series of tests with a sequential record of analysis and no emissions. A laboratory facility may exclude a given sample or test result only if the exclusion is for a valid reason under good laboratory practices and it maintains records regarding the sample and test results and the reason for excluding them.

(2) The test method specified at § 80.46(d)(1) and in use prior to May 30, 2014 is exempt from the requirements of paragraph (h)(1) of this section.

(i) *Precision criteria for approval of the method defined fuel parameter of benzene in gasoline.* (1) *Precision.* Beginning November 30, 2014, for motor vehicle gasoline and gasoline fuel additives subject to the gasoline standards of this part and the MSAT2 standards at §§ 80.41, 80.101, and 80.1230, the maximum allowable standard deviation computed from the results of a minimum of 20 tests made over 20 days (7 or fewer tests per week and 2 or fewer tests per day) on samples using good laboratory practices taken from a single homogeneous commercially available gasoline must be less than or equal to 1.5 times the repeatability ''r'' divided by 2.77, where ''r'' equals the ASTM repeatability of ASTM D3606–10 (Example: A gasoline having a 1Vol% benzene: maximum allowable standard deviation of 20 tests ≤ 1.5*(0.04Vol%/2.77) = 0.02Vol%). The 20 results must be a series of tests with a sequential record of analysis and no emissions. A laboratory facility may exclude a given sample or test result only if the exclusion is for a valid reason under good laboratory practices and it maintains records regarding the sample and test results and the reason for excluding them.

(2) The test method specified at § 80.46(e)(1) and in use prior to May 30, 2014 is exempt from the requirements of paragraph (i)(1) of this section.

(j) *Precision criteria for approval of the method defined fuel parameter of aromatics in diesel.* (1) *Precision.* Beginning November 30, 2014, for motor vehicle diesel and diesel fuel additives subject to the motor vehicle diesel standards at § 80.520, the maximum allowable standard deviation computed from the results of a minimum of 20 tests made over 20 days (7 or fewer tests per week and 2 or fewer tests per day) on samples using good laboratory

practices taken from a single homogeneous commercially available gasoline must be less than or equal to 1.5 times the repeatability ''r'' divided by 2.77, where ''r'' equals the ASTM repeatability of ASTM D1319–10 (Example: A diesel fuel containing 35Vol% aromatics: maximum allowable standard deviation of 20 tests ≤ 1.5*(1.3Vol%/2.77) = 0.70Vol%). The 20 results must be a series of tests with a sequential record of analysis and no emissions. A laboratory facility may exclude a given sample or test result only if the exclusion is for a valid reason under good laboratory practices and it maintains records regarding the sample and test results and the reason for excluding them.

(2) The test method specified at § 80.46(j)(1) and in use prior to May 30, 2014 is exempt from the requirements of paragraph (j)(1) of this section.

(k) *Criteria for designated test method reference installations used to qualify the accuracy of other method-defined parameter instruments.* (1) Beginning November 30, 2014, the reference installation of the method-defined fuel parameter for the applicable designated test method must have precision equal to 1.5 times the repeatability ''r'' of the method-defined fuel parameter's designated test method, where ''r'' is the repeatability of the designated test method.

(i) Olefins in gasoline see paragraph (d)(1) of this section.

(ii) Aromatics in gasoline see paragraph (e)(1) of this section.

(iii) Oxygen and Oxygenate content of gasoline see paragraph (f)(1) of this section.

(iv) Reid Vapor Pressure (RVP) of gasoline see paragraph (g)(1) of this section.

(v) Gasoline Distillation see paragraph (h)(1) of this section.

(vi) Benzene in Gasoline see paragraph (i)(1) of this section.

(vii) Aromatics in Diesel see paragraph (j)(1) of this section.

(2) The reference installation of the method-defined fuel parameter for the applicable designated test method must be shown to be near the middle distribution of an industry monthly inter-laboratory crosscheck program for at least a period of five months using good laboratory practices. Specifically, compute the difference between the instrument's average measurement of the fuel closest to the applicable fuel standard (or to the average value for the fuel parameter in the complex model) and the robust mean for that fuel obtained by all of the non-outlier labs in the monthly inter-laboratory crosscheck program. Standardize this difference by expressing it in robust standard deviation units. These standardized inter-laboratory crosscheck differences should be placed in a moving average with a minimum span of five months. The instrument's moving average in robust standard deviation units cannot be outside the central 50% of the distribution of all laboratories that participated in the inter-laboratory crosscheck program.

(3) The reference installation of the method-defined fuel parameter for the applicable designated test method must be shown to be in statistical quality control as specified in ASTM International D6299 (incorporated by reference, see paragraph (r) of this section) for a minimum period of five months using good laboratory practices.

(l) *Qualification criteria for Voluntary Consensus Standard Based (VCSB) Method-Defined Parameter Test Methods.* (1) Beginning November 30, 2014, include full test method documentation by the Voluntary Consensus Standard Based (VCSB) organization, including a description of the technology and/or instrumentation that makes the method functional.

(2) Include information reported in the test method that demonstrates the test method meets the applicable precision information for the method-defined fuel parameter as described in this section.

(3) Include information reported in the test method that demonstrates the test method has been evaluated using ASTM International D6708 (incorporated by reference, see paragraph (r) of this section) and whether the comparison is a ''null'' result or whether a correlation equation needs to be applied that predicts designated test method results from the applicable method-defined alternative test method.

(4) The test methods specified at §§ 80.2(w) and 80.46(a)(1), (a)(2), (b)(1), (c)(1), (d)(1), (e)(1), (f)(1), and (g)(1) and in use prior to May 30, 2013 are exempt from the requirements of paragraphs (l)(1) through (3) of this section.

(m) *Qualification criteria for Non-Voluntary Consensus Standard Based (non-VCSB) Method-Defined Parameter Test Methods.* For a non-VCSB method to be approved, the following information must be submitted to the Administrator by each test facility for each method that it wishes to have approved.

(1) Beginning November 30, 2014, full and thorough test method documentation, including a description of the technology and/or instrumentation that makes the method functional so a person lacking experience with the test instrument would be able to replicate its results.

(2) Information reported in the test method that demonstrates the test method meets the applicable precision information using good laboratory practices for the method-defined fuel parameter as described in this section.

(3) Both the candidate method-defined Non-VCSB test method and its respective designated test method must be tested on a range of consensus named fuels or locally-named reference materials that are typical of those analyzed by the facility in practice using good laboratory practices and must meet the data requirements for variability as required in ASTM International D6708 (incorporated by reference, see paragraph (r) of this section).

(4) The facility using the candidate method-defined non-VCSB test method must statistically establish through application of ASTM D6708 (incorporated by reference, see paragraph (r) of this section) that the candidate method measures the same aspect of samples as applicable to its respective designated test method using good laboratory practices.

(5) If the use of ASTM D6708 (incorporated by reference, see paragraph (r) of this section) reveals that the candidate method-defined non-VCSB test method has sample-specific biases due to matrix effects that cannot be determined as random the method is disqualified. If however, it is determined that the candidate method-defined non-VCSB test method can be qualified on a narrow circumscribed range of fuels while still meeting the data requirements for variability as required in ASTM International D6708 (incorporated by reference, see paragraph (r) of this section) (see paragraph (m)(3) of this section), then the types of fuels on which the qualification was achieved and for which the method is to be approved must be specified in the candidate method-defined non-VCSB test method description. If there is any restriction on the scope of fuels for which the candidate method-defined non-VCSB test method is to be qualified, the applicant must include a discussion of how the facility plans to screen sample for conformity to the scope. If the candidate method-defined test method is found to have minimal matrix effects, a statement to this effect must be included by the applicant in its application.

(6) The candidate method-defined non-VCSB test method precision qualification must be conducted in the form of ''cross-method reproducibility'' (Rcm) of the candidate method and

applicable designated test method as required in ASTM International D6708 (incorporated by reference, see paragraph (r) of this section), where the Rcm must be equal to or less than 70 percent of the published reproducibility of the applicable designated test method using good laboratory practices.

(7) The applicant of the candidate method-defined non-VCSB test method must demonstrate through the use of ASTM D6708 (incorporated by reference, see paragraph (r) of this section) whether a correlation to applicable designated test method is necessary. If it is determined through the use of this practice that the candidate method-defined non-VCSB test method requires a correlation equation in order to predict designated test method results, then this correlation equation must be applied to the candidate instruments output to obtain measurement results for regulatory purposes using good laboratory practices.

(8) Any additional information requested by the Administrator and necessary to render a decision as to approval of the test method.

(9) Samples used for precision and accuracy determination must be retained for 90 days.

(10) *EPA approval.* Within 90 days of the receipt of materials required to be submitted under paragraphs (m)(1) through (9) of this section, the Administrator shall determine whether the test method is approved under this section.

(11) If the Administrator denies approval of the test method, within 90 days of receipt of all materials required to be submitted in paragraphs (m)(1) through (9) of this section, the Administrator will notify the applicant of the reasons for not approving the method. If the Administrator does not notify the applicant within 90 days of receipt of the application, then the test method shall be deemed approved.

(12) The Administrator may revoke approval of a test method under this section for cause, including, but not limited to, a determination by the Administrator that the approved test method has proved to be inadequate in practice.

(13) An independent third-party scientific review and written report and verification of the information provided pursuant to paragraphs (m)(1) through (9) of this section. The report and verification shall be based upon a site visit and review of relevant documents and shall separately identify each item required by paragraphs (m)(1) through (9) of this section, describe how the independent third-party evaluated the accuracy of the information provided, state whether the independent third-party agrees with the information provided, and identify any exceptions between the independent third-party's findings and the information provided.

(i) The information required under this section to be provided by an independent third party must be conducted by both a professional chemist and professional statistician as specified in paragraph (m)(13)(i)(A) of this section. The verifying chemist and statistician must be:

(A) For a refiner, importer, oxygenate producer, and oxygenate blender, a chemist and statistician who has received at least a bachelor's degree in science from an accredited college in the United States, with professional work experience in the petroleum or oxygenate field.

(B) [Reserved]

(ii) To be considered an independent third-party under this paragraph (m)(13):

(A) The third-party shall not be employed by the refiner, importer, oxygenate producer, or oxygenate blender, or any subsidiary or employee of the refiner, import facility, oxygenate producing facility, or oxygenate blender.

(B) The third party shall be free from any interest in the refiner's, importer's, oxygenate producer's, or oxygenate blender's business.

(C) The refiner, importer, oxygenate producer, or oxygenate blender shall be free from any interest in the third-party's business.

(D) Use of a third-party that is debarred, suspended, or proposed for debarment pursuant to the Government-wide Debarment and Suspension regulations, 40 CFR part 32, or the Debarment, Suspension and Ineligibility provisions of the Federal Acquisition Regulations, 48 CFR part 9 subpart 9.4, shall be deemed in noncompliance with the requirements of this section.

(iii) The independent third-party shall retain all records pertaining to the verification required under this section for a period of five years from the date of creation and shall deliver such records to the Administrator upon request.

(iv) The third-party must provide to EPA documentation of his or her qualifications as part of the scientific review, including proof of appropriate college degree.

(14) If the Administrator finds that an individual test facility has provided false or inaccurate information under this section, upon notice from the Administrator the approval shall be void *ab initio.*

(n) *Accuracy and Precision Statistical Quality Control (SQC) Requirements for the Absolute Fuel Parameters.* Beginning November 30, 2014, a test shall not be considered a test using an approved test method unless the following quality control procedures are performed separately for each instrument used to make measurements:

(1) *Accuracy SQC.* Every facility shall conduct tests on every instrument with a commercially available gravimetric reference material, or check standard as defined in the ASTM International standard practice D6299 (incorporated by reference, see paragraph (r) of this section) on at least a quarterly basis using good laboratory practices. The facility must pre-treat and assess results from the check standard testing after at least 15 testing occasions as described in section 8.2 of this standard practice. The facility must construct ''MR'' and ''I'' charts with control lines as described in section 8.4 and appropriate Annex sections of this standard practice. In circumstances where the absolute difference between the mean of multiple back-to-back tests of the standard reference material and the accepted reference value of the standard reference material is greater than 0.75 times the published reproducibility of the test method must be investigated by the facility. Records of the standard reference materials measurements as well as any investigations into any exceedance of these criteria must be kept for a period of 5 years.

(2)(i) *Precision SQC.* Every facility shall conduct tests on every instrument with a quality control material as defined in paragraph 3.2.3 in ASTM International D6299 (incorporated by reference, see paragraph (r) of this section) either once per week or once per every 20 productions tests, whichever is more frequent. The facility must construct and maintain an ''I'' chart as described in section 7 and section A1.5.1 and a ''MR'' chart as described in section A1.5.2. Any violations of control limit(s) should be investigated by personnel of the facility and records kept for a period of 5 years.

(ii) *Validation of New QC Material.* When a test facility is making a transition from one batch of QC material to the next batch of QC material, the facility will follow the ''Q-Procedure'' in Annex 1.9 of ASTM International standard practice D6299 (incorporated by reference, see paragraph (r) of this section). In following the Q-Procedure if the plot of results from the old and new QC materials on its respective chart shows no special-cause signals, then the result of the new QC material will be considered valid. These records must be

kept by the facility for a period of 5 years.

(o) *Accuracy and Precision Statistical Quality Control (SQC) Requirements for the Voluntary Consensus Standard Based (VCSB) Method-Defined Fuel Parameters.* Beginning November 30, 2014, a test shall not be considered a test using an approved test method unless the following quality control procedures are performed separately for each instrument used to make measurements:

(1) *Accuracy SQC.* Every facility shall conduct tests of every instrument with a commercially available check standard as defined in the ASTM International standard practice D6299 (incorporated by reference, see paragraph (r) of this section) on at least a quarterly basis using good laboratory practices. The check standard must be an ordinary fuel with levels of the fuel parameter of interest close to either the applicable regulatory standard or the average level of use for the facility. The Accepted Reference Value of the check standard must be determined by the respective designated test method for the fuel parameter following the guidelines of ASTM International standard practice D6299. The facility must pre-treat and assess results from the check standard testing after at least 15 testing occasions as described in section 8.2 of this standard practice. The facility must construct ''MR'' and ''I'' charts with control lines as described in section 8.4 and appropriate Annex sections of this standard practice. In circumstances where the absolute difference between the mean of multiple back-to-back tests of the standard reference material and the accepted reference value of the standard reference material is greater than 0.75 times the published reproducibility of the test method must be investigated by the facility. Records of the standard reference materials measurements as well as any investigations into any exceedance of these criteria must be kept for a period of 5 years.

(2)(i) *Precision SQC.* Every facility shall conduct tests of every instrument with a quality control material as defined in paragraph 3.2.3 in ASTM International D6299 (incorporated by reference, see paragraph (r) of this section) either once per week or once per every 20 productions tests, whichever is more frequent. The facility must construct and maintain an ''I'' chart as described in section 7 and section A1.5.1 and a ''MR'' chart as described in section A1.5.2. Any violations of control limit(s) should be investigated by personnel of the facility and records kept for a period of 5 years.

(ii) *Validation of New QC Material.* When a test facility is making a transition from one batch of QC material to the next batch of QC material, the facility will follow the ''Q-Procedure'' in Annex 1.9 of ASTM International standard practice D6299 (incorporated by reference, see paragraph (r) of this section). In following the Q-Procedure if the plot of results from the old and new QC materials on its respective chart shows no special-cause signals, then the result of the new QC material will be considered valid. These records must be kept by the facility for a period of 5 years.

(p) *Accuracy and Precision Statistical Quality Control (SQC) Requirements for the Non-Voluntary Consensus Standard Based (Non-VCSB) Method-Defined Fuel Parameters.* Beginning November 30, 2014, a test shall not be considered a test using an approved test method unless the following quality control procedures are performed separately for each instrument used to make measurements:

(1) *Accuracy SQC for Non-VCSB Method-Defined test methods with minimal matrix effects.* Every facility shall conduct tests on every instrument with a commercially available check standard as defined in the ASTM International standard practice D6299 (incorporated by reference, see paragraph (r) of this section) on at least a quarterly basis using good laboratory practices. The check standard must be an ordinary fuel with levels of the fuel parameter of interest close to either the applicable regulatory standard or the average level of use for the facility. The Accepted Reference Value of the check standard must be determined by the respective designated test method for the fuel parameter following the guidelines of ASTM International standard practice D6299. The facility must pre-treat and assess results from the check standard testing after at least 15 testing occasions as described in section 8.2 of this standard practice. The facility must construct ''MR'' and ''I'' charts with control lines as described in section 8.4 and appropriate Annex sections of this standard practice. In circumstances where the absolute difference between the mean of multiple back-to-back tests of the standard reference material and the accepted reference value of the standard reference material is greater than 0.75 times the published reproducibility of the test method must be investigated by the facility. Records of the standard reference materials measurements as well as any investigations into any exceedance of these criteria must be kept for a period of 5 years.

(2)(i) *Accuracy SQC for Non-VCSB Method-Defined test methods with high sensitivity to matrix effects.* Every facility shall conduct tests on every instrument with a production fuel on at least a quarterly basis using good laboratory practices. The production fuel must be representative of the production fuels that are routinely analyzed by the facility. The Accepted Reference Value of the production fuel must be determined by the respective reference installation of the designated test method for the fuel parameter following the guidelines of ASTM International standard practice D6299 (incorporated by reference, see paragraph (r) of this section). The facility must pre-treat and assess results from the check standard testing after at least 15 testing occasions as described in section 8.2 of this standard practice. The facility must construct ''MR'' and ''I'' charts with control lines as described in section 8.4 and appropriate Annex sections of this standard practice. In circumstances where the absolute difference between the mean of multiple back-to-back tests of the standard reference material and the accepted reference value of the standard reference material is greater than 0.75 times the published reproducibility of the test method must be investigated by the facility. Documentation on the identity of the reference installation and its control status must be maintained on the premises of the method-defined alternative test method. Records of the standard reference materials measurements as well as any investigations into any exceedances of this criterion must be kept for a period of 5 years.

(ii) Each facility is required to send every 20th production batch of gasoline or diesel fuel to EPA's laboratory, along with the facility's measurement result used to certify the batch using the respective method-defined non-VCSB test method. The EPA retains the right to return such sample on a blind basis for a required reanalysis on the respective method-defined non-VCSB test method within 180 days upon receipt of such sample.

(3)(i) *Precision SQC.* Every facility shall conduct tests on every instrument with a quality control material as defined in paragraph 3.2.3 in ASTM International D6299 (incorporated by reference, see paragraph (r) of this section) either once per week or once per every 20 productions tests, whichever is more frequent. The facility must construct and maintain an ''I'' chart as described in section 7 and section A1.5.1 and a ''MR'' chart as described in section A1.5.2. Any

violations of control limit(s) should be investigated by personnel of the facility and records kept for a period of 5 years.

(ii) *Validation of New QC Material.* When a test facility is making a transition from one batch of QC material to the next batch of QC material, the facility will follow the ''Q-Procedure'' in Annex 1.9 of ASTM International standard practice D6299 (incorporated by reference, see paragraph (r) of this section) using good laboratory practices. In following the Q-Procedure if the plot of results from the old and new QC materials on its respective chart shows no special-cause signals, then the result of the new QC material will be considered valid. These records must be kept by the facility for a period of 5 years.

(q) *Record retention requirements for the test methods approved under this subpart.* (1) Each individual test facility must retain records related to the establishment of accuracy and precision values, all test method documentation, and any statistical quality control testing and analysis under this section using good laboratory practices for a period for five years.

(2) [Reserved]

(r) *Materials incorporated by reference.* The Director of the Federal Register approved the incorporation by reference of the documents listed in this section as prescribed in 5 U.S.C. 552(a) and 1 CFR 51. Anyone may inspect copies at the U.S. EPA, Air and Radiation Docket and Information Center, 1301 Constitution Ave. NW., Room B102, EPA West Building, Washington, DC, 20460, under EPA docket ID Number EPA–HQ–OAR–2011–0135, or at the National Archives and Records Administration (NARA). The telephone number for the Air Docket Public Reading Room is (202) 566–1742. For information on the availability of this material at NARA, call 202–741–6030 or go to: *http://www.archives.gov//federal_register/code_of_federal_regulations/ibr_locations.html.* For further information on these test methods, please contact the Environmental Protection Agency at 734–214–4582.

(1) *ASTM International material.* Anyone may purchase copies of these materials from the ASTM International (ASTM), 100 Barr Harbor Dr., West Conshohocken, PA 19428–2959, or by contacting ASTM International customer service at 10–832–9585, or by contacting the email address of *service@astm.org* from the ASTM International Web site of *http://www.astm.org.*

(i) ASTM International standard practice D6708–08 (''ASTM International D6708''), ''Standard Practice for Statistical Assessment and Improvement of Expected Agreement Between Two Test Methods that Purport to Measure the Same Property of a Material'', approved December 15, 2008.

(ii) ASTM International standard practice D6299–10$^{\varepsilon 1}$ (''ASTM International D6708''), ''Standard Practice for Applying Statistical Quality Assurance and Control Charting Techniques to Evaluate Analytical Measurement System Performance'', approved March 1, 2010.

(2) [Reserved]

■ 7c. Section 80.65 is amended by:

■ a. Revising paragraph (d)(1).

■ b. Removing and reserving paragraph (d)(2)(iv).

■ c. Removing and reserving paragraph (d)(2)(v)(E).

■ d. Revising paragraph (d)(3).

■ e. Revising paragraphs (e)(1) introductory text, (e)(1)(i), and (e)(2) introductory text.

■ f. Adding paragraphs (e)(3) and (e)(4).

■ g. Revising paragraphs (f)(1)(i) and (f)(3)(iii)(A).

■ h. Adding a new paragraph (f)(5).

■ i. Revising paragraph (i) introductory text.

■ j. Revising paragraphs (i)(1)(ii) and (i)(1)(iii).

■ k. Revising paragraphs (i)(4)(ii) introductory text and (i)(4)(ii)(A).

■ l. Revising paragraph (i)(6)(i).

§ 80.65 General requirements for refiners and importers.

* * * * *

(d) * * *

(1) All gasoline produced or imported shall be properly designated as reformulated gasoline, conventional gasoline, RBOB, or CBOB.

(2) * * *

(iv) [Reserved]

(v) * * *

(E) [Reserved]

* * * * *

(3) Every batch of reformulated gasoline, conventional gasoline, RBOB, or CBOB produced or imported at each refinery or import facility shall be assigned a number (the ''batch number''), consisting of the EPA-assigned refiner or importer registration number, the EPA facility registration number, the last two digits of the year in which the batch was produced, and a unique number for the batch, beginning with the number one for the first batch produced or imported each calendar year and each subsequent batch during the calendar year being assigned the next sequential number (*e.g.,* 4321–54321–95–000001, 4321–543321–95–000002, etc.).

(e) * * *

(1) Except as provided in paragraphs (e)(3) and (4) of this section, each refiner or importer shall, for each batch of reformulated gasoline or RBOB produced or imported, determine the volume and the value of each of the properties specified in paragraph (e)(2)(i) of this section, except that the value for RVP must be determined only in the case of reformulated gasoline or RBOB that is VOC-controlled. These determinations shall:

(i) Be based on a representative sample of the reformulated gasoline or RBOB that is analyzed using the methodologies specified in § 80.46 through November 29, 2014, or, beginning November 30, 2014, in § 80.47;

* * * * *

(2) In the event that the value of any of these properties is determined by the refiner or importer and by an independent laboratory in conformance with the requirements of paragraph (f) of this section:

* * * * *

(3) Beginning January 1, 2013, API Gravity is not required to be measured or reported for the purpose of batch certification.

(4) For the purposes of meeting the requirements of this paragraph (e) for any winter fuel parameter except benzene, oxygenate, RVP and sulfur, any refiner or importer may, prior to analysis, combine samples of gasoline collected from more than one batch of gasoline or blendstock (''composite sample''), and treat such composite sample as one batch of gasoline or blendstock provided that the refiner or importer meets all of the following requirements:

(i) Samples must be from a single reporting year, must be limited to non-VOC gasoline, and must be of a single grade of gasoline or of a single type of batch-produced blendstock.

(ii) Combines samples of gasoline that are produced or imported over a period no longer than one month. Blendstock samples of a single blendstock type obtained from continuous processes over a calendar month may be mixed together to form one blendstock sample and the sample subsequently analyzed for the required fuel parameters.

(iii)(A) Samples shall have been collected and stored using good laboratory practices in order to prevent change in product composition with regard to baseline properties and to minimize loss of volatile fractions of the sample.

(B) Properties of the retained samples shall be adjusted for loss of butane by comparing the RVP measured

immediately after blending with the RVP determined at the time that the supplemental properties are measured.

(C) The volume of each batch or shipment sampled, to the nearest gallon, shall have been noted and the sum of the volumes, in gallons, calculated.

(iv) For each batch or shipment sampled, the ratio of its volume to the total volume determined in paragraph (e)(4)(iii)(C) of this section shall be determined to three decimal places. This shall be the volumetric fraction of the shipment in the mixture.

(v) The total minimum volume required to perform duplicate analyses to obtain values of all of the required fuel parameters shall be determined.

(vi) The volumetric fraction determined in paragraph (e)(4)(iv) of this section for each batch or shipment shall be multiplied by the value determined in paragraph (e)(4)(v) of this section.

(vii) The resulting value determined in paragraph (e)(4)(vi) of this section for each batch or shipment shall be the volume of each batch or shipment's sample to be added to the mixture. This volume shall be determined to the nearest milliliter.

(viii) The appropriate volumes of each shipment's sample shall be thoroughly mixed and the solution analyzed per the methods required under § 80.46 or § 80.47, as applicable.

(ix) Uses the total of the volumes of the batches of gasoline that comprise the composite sample, and the results of the analyses of the composite sample, for purposes of compliance calculations under this paragraph (e).

(f) * * *

(1) * * *

(i) *Option 1.* The refiner or importer shall, for each batch of reformulated gasoline or RBOB that is produced or imported, have the value for each property specified in paragraph (e)(2)(i) of this section determined by an independent laboratory that collects and analyzes a representative sample from the batch using the methodologies specified in § 80.46 through November 29, 2014, and the methodologies specified in § 80.47 beginning November 30, 2014.

* * * * *

(3) * * *

(iii) * * *

(A) A report for the period January through March shall be submitted by June 1; a report for the period April through June shall be submitted bySeptember 1; a report for the period July through September shall be submitted by December 1; and a report for the period October through December shall be submitted by March 31. Beginning, January 1, 2014, a single annual report for calendar year January through December may be submitted by the following March 31.

* * * * *

(5) A refiner or importer may designate one alternate independent laboratory, to be used only when the designated independent laboratory per paragraph (f)(2) of this section is unavailable and cannot perform testing required for compliance.

(i) The alternate independent laboratory must meet all provisions of this section for designated independent laboratories.

(ii) An alternate independent laboratory may not be used to select a preferred test result. The alternate laboratory may only be used on those occasions where operational necessity causes a need for it (e.g., the primary designated laboratory is closed, the apparatus for certain test methods are down, or independent laboratory personnel are not available).

* * * * *

(i) *Exclusion of previously certified gasoline.* Any refiner who uses previously certified reformulated gasoline, conventional gasoline, RBOB, or CBOB to produce reformulated gasoline or RBOB must exclude the previously certified gasoline for purposes of demonstrating compliance with the standards under § 80.41. This exclusion must be accomplished by the refiner as follows:

(1) * * *

(ii) In the case of previously certified reformulated gasoline or RBOB determine the emissions performances for toxics and NO_X, except as provided in § 80.41(e) and (f), and VOC for VOC-controlled gasoline, and the designations for VOC control.

(iii) In the case of previously certified conventional gasoline or CBOB, determine the exhaust toxics and NO_X emissions performances, except as provided in § 80.101(c)(3) and (4).

* * * * *

(4) * * *

(ii) Where a refiner uses previously certified conventional gasoline or CBOB to produce reformulated gasoline or RBOB:

(A) The refiner must include the volume and properties of any batch of previously certified conventional gasoline or CBOB as a negative batch in the refiner's anti-dumping compliance calculations under § 80.101(g) for the refinery, or where applicable, the refiner's aggregation under § 80.101(h); and

* * * * *

(6)(i) Any refiner may use the procedures specified in this paragraph (i) to combine previously certified conventional gasoline or CBOB with reformulated gasoline or RBOB, to reclassify conventional gasoline or CBOB into reformulated gasoline or RBOB, or to change the designations of reformulated gasoline or RBOB with regard to VOC control.

* * * * *

Subpart D—[Amended]

■ 8. Section 80.75 is amended by:
■ a. Revising paragraphs (a)(1)(i) through (iv).
■ b. Revising paragraph (a)(2)(v)(B).
■ c. Revising paragraph (a)(2)(viii)(D).
■ d. Revising paragraph (a)(2)(ix)(F).
■ e. Removing and reserving paragraph (b).
■ f. Revising paragraph (c)(1).
■ g. Adding paragraph (d) introductory text.
■ h. Revising paragraph (d)(1).
■ i. Revising paragraph (d)(2)(iii).
■ j. Adding paragraph (e) introductory text.
■ k. Revising paragraph (e)(1).
■ l. Adding paragraph (g) introductory text.
■ m. Adding paragraph (h) introductory text.
■ n. Revising paragraph (i).
■ o. Removing and reserving paragraph (k).
■ p. Revising paragraph (l).
■ q. Revising paragraph (o) introductory text.

§ 80.75 Reporting requirements.

* * * * *

(a) * * *

(1) * * *

(i) The first quarterly report shall include information for reformulated gasoline or RBOB produced or imported from January 1 through March 31, and shall be submitted by June 1 of each year;

(ii) The second quarterly report shall include information for reformulated gasoline or RBOB produced or imported from April 1 through June 30, and shall be submitted by September 1 of each year;

(iii) The third quarterly report shall include information for reformulated gasoline or RBOB produced or imported from July 1 through September 30, and shall be submitted by December 1 of each year; and

(iv) The fourth quarterly report shall include information for reformulated gasoline or RBOB produced or imported from October 1 through December 31, and shall be submitted by March 31 of each year.

(2) * * *

(v) * * *

(B) The properties, along with identification of the test method used to measure those properties, pursuant to §§ 80.65 and 80.66;

* * * * *

(viii) * * *

(D) The volume, properties (along with identification of the test method used to measure those properties), and designation of the batch.

(ix) * * *

(F) The properties of the butane batch, along with the identification of the test method used to measure those properties, specified by the butane supplier, or the properties specified in § 80.82(c) or (d), as appropriate;

* * * * *

(b) [Reserved]

(c) * * *

(1) Any refiner or importer that produced or imported any reformulated gasoline or RBOB under the complex model that was to meet the VOC emissions performance standards on average (''averaged reformulated gasoline'') shall submit to the Administrator, with the third quarterly report, a report for each refinery or importer for such averaged reformulated gasoline produced or imported during the previous VOC averaging period. Beginning January 1, 2014, the information required by this paragraph (c) shall be submitted with the annual report. This information shall be reported separately for the following categories:

* * * * *

(d) *Benzene content averaging reports.* Pursuant to § 80.41(f)(3), for any refiner, refinery or importer not subject to the applicable standards at § 80.41(f)(1), the report required by this paragraph (d) is not required beginning January 1, 2014, or beginning January 1, 2016 for all other refiners.

(1) Any refiner or importer that produced or imported any reformulated gasoline or RBOB that was to meet the benzene content standards on average (''averaged reformulated gasoline'') shall submit to the Administrator, with the fourth quarterly report, a report for each refinery or importer for such averaged reformulated gasoline that was produced or imported during the previous toxics averaging period. Beginning January 1, 2014, the information required by this paragraph (d) shall be submitted with the annual report.

(2) * * *

(iii) The actual total content of benzene, along with identification of the test methods used to measure the content of benzene;

* * * * *

(e) *Toxics emissions performance averaging reports.* Pursuant to § 80.41(f)(3), for any refiner, refinery or importer not subject to the applicable standards at § 80.41(f)(1), the report required by this paragraph (e) is not required beginning January 1, 2014, or beginning January 1, 2016 for all other refiners.

(1) Any refiner or importer that produced or imported any reformulated gasoline or RBOB that was to meet the toxics emissions performance standards on average (''averaged reformulated gasoline'') shall submit to the Administrator, with the fourth quarterly report, a report for each refinery or importer for such averaged reformulated gasoline that was produced or imported during the previous toxics averaging period. Beginning January 1, 2014, the information required by this paragraph (e) shall be submitted with the annual report.

* * * * *

(g) *NO_X emissions performance averaging reports.* Pursuant to § 80.41(f)(2), for any refiner, refinery or importer not subject to the applicable standards at § 80.41(f)(1), the report required by this paragraph (g) is not required beginning January 1, 2012.

* * * * *

(h) *Credit transfer reports.* As an additional part of the fourth quarterly report required by this section, any refiner or importer shall, for each refinery or importer, supply the information specified in paragraphs (h)(1) through (3) of this section for any benzene credits that are transferred from or to another refinery or importer. Beginning January 1, 2014, the information required by this paragraph (h) shall be submitted with the annual report.

* * * * *

(i) *Covered areas of gasoline use report.* Any refiner that produced any reformulated gasoline that was to meet any reformulated gasoline standard on average (''averaged reformulated gasoline'') shall, for each refinery at which such averaged reformulated gasoline was produced, submit to the Administrator, with the fourth quarterly report, a report that contains the identity of each covered area that was supplied with any averaged reformulated gasoline produced at each refinery during the previous year. Beginning January 1, 2014, the information required by this paragraph (i) shall be submitted with the annual report.

* * * * *

(k) [Reserved]

(l) *Reports for per-gallon compliance gasoline.* In the case of reformulated gasoline or RBOB for which compliance with each of the standards set forth in § 80.41 is achieved on a per-gallon basis, the refiner or importer shall submit to the Administrator, by March 1 of each year, a report of the volume of each designated reformulated gasoline or RBOB produced or imported during the previous calendar year for which compliance is achieved on a per-gallon basis, and a statement that each gallon of this reformulated gasoline or RBOB met the applicable standards.

* * * * *

(o) *Additional reporting requirements for refiners that blend butane with reformulated gasoline or RBOB.* For refiners that blend any butane with reformulated gasoline or RBOB under § 80.82, the refiner shall submit to the Administrator, by March 1 of each year, a report for the refinery which includes the following information for the previous calendar year:

* * * * *

■ 9. Section 80.82 is amended by:

■ a. Revising the introductory text.

■ b. Revising paragraphs (a) through (d).

■ c. Revising paragraph (e)(1).

■ d. Adding paragraphs (i) and (j).

§ 80.82 Butane blending.

A refiner for any refinery that produces gasoline by blending butane with previously certified gasoline may meet the sampling and testing requirements for this part as follows:

(a) Except as provided in paragraphs (e) and (i) of this section, any refinery that blends butane for which the refinery has documents from the butane supplier which demonstrate that the butane is commercial grade, as defined in paragraph (c) of this section, may demonstrate compliance with the standards in this part based on the properties specified in paragraph (c) of this section, or the properties specified by the butane supplier.

(b)(1) Except as provided in paragraphs (e) and (i) of this section, any refiner that blends butane for which the refiner has documents from the butane supplier which demonstrate that the butane is non-commercial grade, as defined in paragraph (d) of this section, may demonstrate compliance with the standards in this part based on the properties specified in paragraph (d) of this section, or the properties specified by the butane supplier, provided that the refinery:

(i) Conducts a quality assurance program of sampling and testing the butane obtained from each separate butane supplier which demonstrates that the butane has the properties specified in paragraph (d) of this section; and

(ii) The frequency of sampling and testing for the butane received from each butane supplier must be one sample for every 500,000 gallons of butane received, or one sample every three months, whichever is more frequent.

(2) Where test results indicate the butane does not meet the requirements in paragraph (b)(1) of this section, the refiner may:

(i) Blend the butane with conventional gasoline, or reformulated gasoline that has been downgraded to conventional gasoline, provided that any applicable equivalent emissions performance standards of the butane batch, as determined using the provisions in § 80.101(g)(3), meets the refinery's standards under § 80.101 and the refiner meets all of the standards and requirements applicable to refiners of conventional gasoline under this part;

(ii) Blend the butane with reformulated gasoline or RBOB, provided that the final batch of butane blended with reformulated gasoline or RBOB meets the per-gallon standards in § 80.41, as determined using the test methods in § 80.46.

(c) Commercial grade butane is defined as butane for which test results demonstrate that the butane is 95% pure and has all of the following properties:

(1) Olefins ≤1.0 vol%.

(2) Aromatics ≤2.0 vol%.

(3) Benzene ≤0.03 vol%.

(4) Sulfur ≤30 ppm from January 1, 2005 through December 31, 2016; ≤10 ppm beginning January 1, 2017 and thereafter.

(d) Non-commercial grade butane is defined as butane for which test results demonstrate the butane has all of the following properties:

(1) Olefins ≤10.0 vol%.

(2) Aromatics ≤2.0 vol%.

(3) Benzene ≤0.03 vol%.

(4) Sulfur ≤30 ppm beginning January 1, 2005 through December 31, 2016; ≤10 ppm beginning January 1, 2017 and thereafter.

(e)(1) When butane is blended with conventional gasoline under this section during the period May 1 through September 15, the refiner shall demonstrate through sampling and testing, using the test method for Reid vapor pressure in § 80.47, that each batch of conventional gasoline blended with butane meets the volatility standards specified in § 80.27.

* * * * *

(i) A refiner who only blends commercial grade or non-commercial grade butane into PCG may meet the sampling and testing requirements of subpart O of this part by meeting the requirements of paragraphs (a) through (f) and (h)(3) of this section and all of the following additional requirements:

(1) The per-gallon sulfur content of every batch of butane must not exceed 10 ppm.

(2) The refiner obtains test results from the butane supplier that demonstrate that the sulfur content of each load does not exceed the applicable per-gallon sulfur standard under paragraph (i)(1) of this section through test results of samples of butane contained in the storage tank from which the butane blender is supplied.

(i) Sampling and testing for the sulfur content of the butane by the supplier must be subsequent to each receipt of butane into the supplier's storage tank or the sampling and testing must be immediately before transfer of butane to the butane blender.

(ii) The testing must be performed in accord with the provisions of § 80.47.

(iii) The butane blender must obtain a copy of the butane supplier's test results at the time of each transfer of butane to the butane blender.

(3) The sulfur content and volume of each batch of gasoline produced is that of the butane that the refiner blends into PCG for the purposes of calculating compliance with the 10 ppm per-gallon sulfur standard.

(4) The requirements of paragraphs (i)(1) through (3) of this section apply regardless of whether the butane is commercial grade or noncommercial grade.

(5) The quality assurance testing requirement of paragraph (b)(1) of this section applies regardless of whether the butane is commercial grade or noncommercial grade.

(6) If any of the requirements of this paragraph (i) are not met, in whole or in part for any butane blended into gasoline, that butane is deemed in violation of the gasoline standards in § 80.1603(a).

(j) The PCG procedures of § 80.1640 may be used to meet the sampling and testing requirements of subpart O of this part.

■ 10. Section 80.101 is amended by:
■ a. Revising paragraph (i)(1)(i)(A).
■ b. Revising paragraph (i)(3)(i)(C).
■ c. Revising paragraph (i)(3)(ii)(C).

§ 80.101 Standards applicable to refiners and importers.

* * * * *

(i) * * *

(1) * * *

(i)(A) Through November 29, 2014, determine the value of each of the properties required for determining compliance with the standards that are applicable to the refiner or importer, by collecting and analyzing a representative sample of gasoline or blendstock from the batch, using methodologies specified in § 80.46; beginning November 30, 2014, determine the value of each of the properties required for determining compliance with the standards that are applicable to the refiner or importer, by collecting and analyzing a representative sample of gasoline or blendstock from the batch, using methodologies specified in § 80.47; except that

* * * * *

(3) * * *

(i) * * *

(C) The testing must be for each applicable parameter specified under § 80.65(e)(2)(i), using either of the following:

(*1*) The test methods specified under § 80.46, through November 29, 2014.

(*2*) The test methods specified under § 80.47, beginning November 30, 2014.

* * * * *

(ii) * * *

(C) The testing must be for each applicable parameter specified under § 80.65(e)(2)(i), using the test methods specified under § 80.46 through November 29, 2014, or under § 80.47 beginning November 30, 2014.

* * * * *

Subpart E—[Amended]

■ 11. Section 80.105 is amended by:
■ a. Revising paragraph (a)(5)(v).
■ b. Revising paragraph (a)(5)(vi)(D).
■ c. Revising paragraphs (a)(5)(vii)(F) and (a)(5)(vii)(G).
■ d. Revising paragraph (a)(7)(iii).
■ e. Revising paragraph (d)(2).

§ 80.105 Reporting requirements.

(a) * * *

(5) * * *

(v) The properties, along with identification of the test method used to measure those properties, pursuant to § 80.101(i);

(vi) * * *

(D) The volume, properties, along with identification of the test method used to measure those properties, and designation of the batch;

(vii) * * *

(F) The properties of the butane batch specified by the butane supplier, along with identification of the test method used to measure those properties of the

butane, or the properties specified in § 80.82(c) or (d), as appropriate.

(G) Where butane is blended with conventional gasoline during the period May 1 through September 15, the Reid vapor pressure, along with identification of the test method used to measure Reid vapor pressure using the appropriate test method at § 80.46 through November 29,2014, and at § 80.47 beginning November 30, 2014; and

* * * * *

(7) * * *

(iii) A statement that the gasoline produced using butane meets all applicable downstream standards that apply to conventional gasoline under subpart E of this part, along with the test methods used to determine compliance with the downstream standards that apply to conventional gasoline under subpart E of this part; and

* * * * *

(d) * * *

(2) Submitted to EPA by March 31 each year for the prior calendar year averaging period; and

* * * * *

■ 12. Section 80.161 is amended by:

■ a. Revising paragraph (b)(1)(ii)(A)(*2*) and adding paragraph (b)(1)(ii)(A)(*3*).

■ b. Revising paragraph (b)(2) introductory text.

■ c. Revising paragraphs (b)(3)(ii)(C), (b)(3)(v), and (b)(3)(viii).

■ d. Revising paragraph (d)(1).

§ 80.161 Detergent additive certification program.

* * * * *

(b) * * *

(1) * * *

(ii) * * *

(A) * * *

(*2*) In the case of the alternative national generic certification option pursuant to § 80.163(a)(1)(iii), the minimum recommended concentration must equal or exceed the amount mixed into the associated test fuel specified in § 80.177, which was shown to satisfy the fuel injector deposit control and intake valve deposit control performance tests and standards specified in § 80.176.

(*3*) In the case of any other detergent certification option, the minimum recommended concentration must equal or exceed the amount mixed into the associated test fuel specified in § 80.164, which was shown to satisfy the fuel injector deposit control and intake valve deposit control performance tests and standards specified in § 80.165.

* * * * *

(2) The detergent additive manufacturer (or other certifying party) must submit to EPA a sample of the actual detergent additive package which was used in the certification test fuels specified in § 80.164 or § 80.177 or, if such sample is not available, then a sample which has the same composition as the package used in certification testing.

* * * * *

(3) * * *

(ii) * * *

(C) Complete documentation of the test fuel formulation, IVD demonstration procedures, fuel injector deposit demonstration procedure if applicable, detergent performance test procedures, and test results are available for EPA's inspection upon request.

* * * * *

(v) In the case of a national or PADD certification (pursuant to § 80.163(a)(1), (a)(1)(i), (a)(1)(ii), or (b)) for which the test fuel was specially formulated from refinery blend stocks, the results of the IVD demonstration test, pursuant to § 80.164(b)(3). In the case of an alternative national generic certification (pursuant to § 80.163(a)(1)(iii)), the results of the IVD demonstration test and fuel injector deposit demonstration test (pursuant to § 80.177).

* * * * *

(viii) The test concentration(s) of the subject detergent additive in each test fuel, and the corresponding test results (percent flow restriction demonstrated in the fuel injector test and milligrams of deposit per valve demonstrated in the IVD test).

* * * * *

(d) * * *

(1) If a detergent blender possesses deposit control performance test results as specified in § 80.165, § 80.166, or § 80.176 which show that the minimum treat rate recommended by the manufacturer of a detergent additive product exceeds the amount of that detergent actually required for effective deposit control, then, upon informing EPA in writing of these circumstances, the detergent blender may use the detergent at the lower concentration substantiated by these test results.

* * * * *

■ 13. Section 80.163 is amended by adding a new paragraph (a)(1)(iii) to read as follows:

§ 80.163 Detergent certification options.

* * * * *

(a) * * *

(1) * * *

(iii) *Alternative national generic certification option.* To be certified under this option, a candidate detergent must meet the deposit control performance test requirements and standards specified in § 80.176 using test fuels that conform to the requirements in § 80.177. A detergent certified under this option is eligible to be used at a conforming LAC in any grade of gasoline, with or without an oxygenate component.

* * * * *

■ 14. Section 80.164 is amended by revising paragraph (a) introductory text to read as follows:

§ 80.164 Certification test fuels.

(a) *General requirements.* This section provides specifications for the test fuels required in conjunction with the certification options described in § 80.163(a)(1), (a)(1)(i), (a)(1)(ii), and (b) through (d). For each such certification option, the associated test fuel must meet or exceed the levels of four basic fuel parameters (aromatics, fuel sulfur, olefins, and T–90) prescribed here and may also contain specified oxygenate compounds. In addition, pursuant to paragraph (b)(3) of this section, some fuels must undergo an IVD demonstration test before they are eligible to be used as test fuels under this certification program. Test fuel characteristics must be reported to EPA in the detergent certification letter required pursuant to § 80.161(b)(3). The specifications for the test fuels required in conjunction with the alternative national generic certification option in § 80.163(a)(1)(iii) are contained in § 80.177.

* * * * *

■ 15. Section 80.165 is revised to read as follows:

§ 80.165 Certification test procedures and standards.

This section specifies the deposit control test requirements and performance standards which must be met in order to certify detergent additives for use in unleaded gasoline, pursuant to § 80.161(b)(1)(ii)(A)(*3*). These standards must be met in the context of the specific test procedures identified in paragraphs (a) and (b) of this section, except as provided in paragraph (c) of this section. The testing must be conducted and the performance standards met when the subject detergent additive is mixed in a test fuel meeting all relevant requirements of § 80.164, including the deposit-forming tendency demonstration specified in § 80.164(b)(3), if applicable. Complete test documentation must be submitted by the certifying party within 30 days of receipt of a written request from EPA for such records. The certification test procedures and standards associated with the alternative national generic

certification option in § 80.163(a)(1)(iii) are contained in § 80.176.

(a) *Fuel injector deposit control testing.* The required test fuel must produce no more than 5% flow restriction in any one injector when tested in accordance with ASTM D 5598–94, ''Standard Test Method for Evaluating Unleaded Automotive Spark-Ignition Engine Fuel for Electronic Port Fuel Injector Fouling,'' 1994, which is incorporated by reference pursuant to § 80.178. At the option of the certifier, fuel injector flow may be measured at intervals during the 10,000 mile test cycle described in ASTM D 5598–94, in addition to the flow measurements required at the completion of the test cycle, but not more than every 1,000 miles.

(b) *Intake valve deposit control testing.* The required test fuel must produce the accumulation of less than 100 mg of intake valve deposits on average when tested in accordance with ASTM D 5500–94, ''Standard Test Method for Vehicle Evaluation of Unleaded Automotive Spark-Ignition Engine Fuel for Intake Valve Deposit Formation,'' 1994, which is incorporated by reference pursuant to § 80.178.

(c) If conducted using test fuels meeting all relevant requirements of § 80.164, and completed prior to September 3, 1996, then the PFID and IVD control test procedures required for detergent certification in California (specified in section 2257 of Title 13, California Code of Regulations) will also be considered acceptable. California Air Resources Board, ''Test Method for Evaluating Port Fuel Injector (PFI) Deposits in Vehicle Engines'', March 1, 1991, and California Air Resources Board, ''BMW—10,000 Miles Intake Valve Test Procedure'', March 1, 1991, are incorporated by reference pursuant to § 80.178.

■ 16. Section 80.167 is amended by revising paragraph (a) to read as follows:

§ 80.167 Confirmatory testing.

* * * * *

(a) Confirmatory testing conducted to evaluate the validity of detergent certifications under the national, PADD, or fuel-specific options under § 80.163(a)(1), (a)(1)(i), (a)(1)(ii), and (b) through (d) will generally entail a single vehicle test using the procedures detailed in § 80.165. The test fuel(s) used in conducting such confirmatory certification testing will contain the specified fuel parameters at or below the minimum levels specified in § 80.164, and will otherwise conform to the applicable certification test fuel specifications therein. Confirmatory testing conducted to evaluate the validity of detergent certifications under the alternative national generic certification option in § 80.163(a)(1)(iii) will generally entail a single test using the procedures detailed in § 80.177. The test fuel(s) used in conducting such confirmatory certification testing will contain the specified fuel parameters at or below the minimum levels specified in § 80.177, and will otherwise conform to the applicable certification test fuel specifications therein.

* * * * *

■ 17. A new § 80.175 is added to subpart G and reserved as follows:

§ 80.175 [Reserved]

■ 18. A new § 80.176 is added to subpart G to read as follows:

§ 80.176 Alternative certification test procedures and standards.

This section specifies the deposit control test requirements and performance standards which must be met in order to certify detergent additives for use in unleaded gasoline pursuant to § 80.161(b)(1)(ii)(A)(*2*). These standards must be met in the context of the specific test procedures identified in paragraphs (a) and (b) of this section. Testing must be conducted and the performance standards met when the subject detergent additive is mixed in a test fuels meeting all relevant requirements of § 80.177. Complete test documentation must be submitted by the certifying party within 30 days of receipt of a written request from EPA for such records.

(a) *Fuel injector deposit control testing.* The required test fuel must produce no more than one inoperative injector when tested in accordance with the fuel injector deposit test procedure specified in paragraph (c) of this section.

(b) *Intake valve deposit control testing.* The required test fuel must produce the accumulation of less than 50 mg of intake valve deposits on average when tested in accordance with ASTM D6201—04(2009), ''Standard Test Method for Dynamometer Evaluation of Unleaded Spark-Ignition Engine Fuel for Intake Valve Deposit Formation'', which is incorporated by reference pursuant to § 80.178.

(1) Tests conducted for the intake valve deposit demonstration test pursuant to § 80.177(b)(1)(iv) and to demonstrate compliance with the intake valve deposit control standards in this section must be conducted using the same engine block and cylinder head.

(2) All results must be derived from operationally valid tests in accordance with the test validation criteria of ASTM D 6201—04(2009).

(3) Test results shall be reported for individual intake valves and as an average of all intake valves.

(c) *Fuel injector deposit test procedure*—(1) *Summary of Test Procedure.* After flushing the vehicle fuel system with the fuel to be tested and installing new injectors, an automatic starter control system starts the vehicle and lets it idle for five minutes. The engine is then shut off and allowed to soak for 25 minutes. This cycle is repeated for a total of 192 cycles (96 hours). During this time, the engine is kept at operating temperature with block heaters. After the 96 hours of start/soak cycles, the engine is allowed to hot-soak for 48 hours, during which time the engine is not started but is maintained at operating temperature. At the end of the 48-hour hot soak, the block heaters are turned off and the engine is allowed to cool naturally to room temperature. At the end of this 48-hour ambient temperature soak, an injector balance test is conducted to determine whether any poppet nozzles are stuck closed.

(2) *Facilities and Equipment*—(i) *Location.* A temperature-controlled garage or large room is needed. A dynamometer is not needed, since this test is an idle test. The room temperature shall be maintained in the range of 68–75 °F. The room shall be equipped with an exhaust system that connects to the vehicle tail pipe to remove the exhaust gases from the building. It is recommended that an interlock be provided so that if the building exhaust system fails, the vehicle test will shut down.

(ii) *Electrical Power.* Two 110-volt, 15-amp circuits are needed (20-amp circuits are recommended) to operate the four block heaters and a battery charger.

(iii) *Fuel Drain Facility.* A facility is required to drain the fuel from the vehicle between tests. The fuel is drained from the service port on the fuel rail, near the back of the engine. A commercial cart equipped with a tank and a suction pump is recommended for this operation.

(iv) *Vehicle.* A Chevrolet Astro or GMC Safari van, model year 1998–2001, shall be used for the test. Either two-wheel drive or all-wheel drive is satisfactory, although the former allows easier installation of the block heaters.

(v) *Injectors.* New injectors, General Motors part number 17091432, shall be used for each test.

(vi) *Block Heaters.* Four block heaters, General Motors part number 12371293, are needed for each vehicle. Two

heaters shall be installed on each side of the engine, in the freeze plug locations.

(vii) *Battery Charger.* Because of the large number of starts and the very short engine running time, a battery charger is needed. It is recommended that the charger be installed permanently on the vehicle and remain plugged in while the test is in progress.

(viii) *Starter Controller.* A system is needed to start the engine automatically and then shut it off after exactly five minutes of running. A commercial after-market remote starting system connected to a timer or computer can be used, or a one-of-a-kind system can be designed and built.

(ix) *Tech 2 Analyzer.* A General Motors Tech 2 analyzer, part number GM3000094, available from Kent-Moore, shall be used to conduct the injector balance test.

(x) *Fuel Pressure Gauge.* A fuel pressure gauge capable of measuring fuel system pressure to the nearest 1 psi over the range of 45 to 65 psi, shall be used with the Tech 2 analyzer when conducting the injector balance test. A pressure transducer shall not be used.

(xi) *Gaskets.* The upper intake manifold gasket and injector body gasket will need to be replaced from time to time as they crack, tear, or wear out from frequent handling during injector replacement.

(3) *Initial Vehicle Preparation*—(i) *Diagnostics.* To help determine whether a vehicle is satisfactory for use in this injector test procedure, a thorough inspection and engine diagnostic test shall be conducted as described in the service manual. Check the cooling system to be sure the coolant looks clean and there are no signs of rust.

(ii) *Block Heaters.* Install four electric block heaters, General Motors part number 12371293, in the coolant passages of the engine block, two on each side of the block. The heaters will be plugged into a heater control unit. Two of the heaters will remain on at all times during the first 144 hours of the injector fouling test, while the other two heaters will be turned on and off by the controller as needed to maintain an engine temperature of about 100–102°C during the soak periods of the test. (The temperature will drop while the engine is running, as the coolant from the radiator circulates through the engine. The temperature should recover to 100–102°C within about 20 minutes after the engine shuts off.)

(iii) *Thermocouples.* Install a 1/16-inch Type K thermocouple in a threaded bolt hole on the rear of the right cylinder head. This thermocouple provides the feedback signal to the controller to turn two block heaters on and off. Install another thermocouple in the other hole near the first thermocouple. This second thermocouple provides a signal to an over-temperature safety shut-off on the heater controller. If the engine temperature reaches the set point (110°C recommended), the heater controller will signal the starter controller to shut down the test.

(iv) *Fuel System Flush.* Drain the fuel from the fuel system through the service port on the fuel rail at the back of the engine. Refuel with a non-detergent gasoline containing between 5 and 10 percent ethanol. Drive the vehicle for approximately 100 miles to thoroughly expose all parts of the fuel system to the fuel. The fuel pump and fuel filters should not be replaced unless there is a problem with them or if the vehicle history suggests that replacement would be prudent. If replacement is necessary, the new parts should first be conditioned by recirculating a 10% ethanol-gasoline blend (without deposit control additive) through them for one week.

(v) *Oil Change.* Change the engine oil and oil filter, using oil that meets the manufacturer's recommended service classification and viscosity grade.

(vi) *Battery Charger.* Install a battery charger in the vehicle so that it can be plugged in during the test and keep the battery at full charge.

(vii) *Radiator.* Install cardboard or other suitable material on the front of the radiator to block the flow of air through the radiator while the engine is running. This will help minimize the drop in coolant temperature.

(viii) *Starter Controller.* Make the necessary changes to the vehicle electrical system so that the engine can be started and stopped automatically on a programmed schedule. Install a starter controller or computer and program it to do the following:

(A) Start the engine and let it run for 5 minutes, and then shut it off and let it hot-soak for 25 minutes.

(B) Repeat the 5/25 cycle for a total of 192 cycles.

(C) Allow a 48-hr hot soak during which the engine is not run but the engine temperature is maintained at 100–102°C.

(D) Turn off the heaters for 48 hours.

(E) Continuously count and display the number of cycles that have been completed throughout the test.

(4) *Test Procedure.* The steps described in paragraphs (c)(3)(i) though (vi) of this section must be performed by the action described in paragraph (c)(3)(vii) of this section so that the new injectors are exposed only to the new test fuel.

(i) Drain the fuel from the vehicle.

(ii) Add approximately 2 gallons of the fuel to be tested.

(iii) Drive the vehicle for approximately 20 miles at speeds up to approximately 50–60 mph. Approximately every 5 miles, stop the vehicle and moderately accelerate. If the radiator covering is still in place, watch the temperature gauge during the driving and avoid overheating the engine. This step not only flushes the fuel system but also helps remove carbon (if any) from the spark plugs and water from the exhaust system.

(iv) Drain the fuel from the vehicle and add approximately 1 to 2 gallons of the fuel to be tested.

(v) Drive the vehicle for approximately 5 miles. Watch the temperature gauge and avoid overheating the engine.

(vi) Drain the fuel from the vehicle and add approximately 10 gallons of the fuel to be tested. (The test consumes about 7.5 gallons of fuel.)

(vii) Remove the fuel injectors and install new injectors. Run the engine for a few minutes to be sure it runs properly.

(viii) Park the vehicle in the location where the test will be run.

(ix) Connect the vehicle tail pipe to the building exhaust system.

(x) Depending on the design of the starter control system, remove fuses and relays as necessary and connect the wires from the controller to the vehicle fuse box. Close the hood.

(xi) Turn on the vehicle ignition switch and the security bypass switch if so equipped.

(xii) Turn on the heater controller and be sure that it is working.

(xiii) Turn on the starter controller and the vehicle should start.

(xiv) Monitor the engine temperature for the first few cycles to be sure it is increasing.

(xv) At the end of the 192-hour (8-day) test, turn off the ignition switch, starter controller, and heater controller. Return the fuses, relays, and wires to their standard configuration for normal operation of the vehicle.

(xvi) Connect the Tech 2 analyzer to the ALDL connector under the instrument panel, and connect the fuel pressure gauge to the service port on the fuel rail at the back of the engine.

(xvii) Conduct the injector balance test by following the instructions on the Tech 2. The injector balance test checks each injector individually to determine whether the poppet nozzle is stuck closed. First, the Tech 2 turns on the fuel pump momentarily to pressurize the fuel system. Then it pulses the injector for a preset interval. If the

injector and poppet nozzle are working properly, the fuel system pressure will decrease gradually and smoothly by about 8 to 10 psi during the pulsing. If the pressure does not decrease, or decreases very suddenly but then stops decreasing before the pulsing is done, the poppet is stuck closed. This procedure, beginning with pressurizing the fuel system, is carried out for each injector.

■ 19. A new § 80.177 is added to subpart G to read as follows:

§ 80.177 Certification test fuels for use with the alternative test procedures and standards.

(a) *General requirements.* This section provides specifications for the test fuels required in conjunction with the alternative national generic certification option described in § 80.163(a)(1)(iii).

(1) The test fuel characteristics detailed in this section must be reported to EPA in the detergent certification letter required pursuant to § 80.161(b)(3).

(2) The levels of the basic fuel parameters specified in this section (ethanol, olefins, aromatics, sulfur, and 90% evaporation distillation temperature) must be measured in accordance with applicable procedures in § 80.46.

(3) No detergent-active substance other than the detergent additive package undergoing testing may be added to a certification test fuel. Typical nondetergent additives, such as antioxidants, corrosion inhibitors, and metal deactivators, may be present in the test fuel at the discretion of the additive certifier. In addition, any nondetergent additives (other than oxygenate compounds) which are commonly blended into gasoline and which are known or suspected to affect IVD or PFID formation, or to reduce the ability of the detergent in question to control such deposits, should be added to the test fuel for certification testing.

(4) Certification test requirements may be satisfied for a detergent additive using more than one batch of test fuel, provided that each batch satisfies all applicable test fuel requirements under this section.

(5) Unless otherwise required by this section, finished test fuels must conform to the requirements for commercial gasoline described in ASTM D 4814–11, ''Standard Specification for Automotive Spark-Ignition Engine Fuel'', which is incorporated by reference pursuant to § 80.178.

(b) *Test fuel for intake valve deposit testing:* This paragraph provides specifications for the test fuels required for use in the test procedure specified in § 80.176(b).

(1) The test fuel must contain levels of the specified parameters consistent with the requirements of this section.

(i) The test fuel must contain no less than 8.0 volume percent and no more than 10.0 volume percent ethanol. Commercial fuel grade denatured fuel ethanol must be used that conforms to the requirement of § 80.1610 and ASTM D4806—11a ''Standard Specification for Denatured Fuel Ethanol for Blending with Gasolines for Use as Automotive Spark-Ignition Engine Fuel'', which is incorporated by reference pursuant to § 80.178.

(ii) The test fuel must contain no less than 8.0 volume percent olefins. At least 75 percent of the olefins must be derived from fluid catalytic cracker unit (FCC) gasoline. Such FCC gasoline can be full-range FCC gasoline or a mixture of light and heavy FCC gasolines. Such FCC gasoline must be produced by a commercial gasoline refiner and meet the following criteria:

(A) The FCC gasoline must be designated by the commercial refiner as full range FCC gasoline or whole FCC gasoline, and must have a T90 distillation temperature greater than 300 °F.

(B) If a mixture of light and heavy FCC gasoline is used, heavy FCC gasoline must contribute at least 50 percent of the sulfur in the mixture. Heavy FCC gasoline must meet the following criteria:

(*1*) The heavy FCC gasoline must be designated by the commercial refiner as heavy FCC gasoline.

(*2*) The heavy FCC gasoline must have an API gravity less than 45 and a T90 distillation temperature greater than 325 °F.

(iii) The test fuel must contain no less than 28 volume percent aromatics.

(iv) The test fuel must contain no less than 240 ppm sulfur. At least 60 percent of the sulfur must be derived from FCC gasoline that meets the specifications in paragraph (b)(1)(ii) of this section.

(v) The test fuel must have a T90 distillation temperature of no less than 290 °F.

(vi) The test fuel containing no deposit control additives must produce no less than 500 mg averaged over all intake valves when subjected to the intake valve deposit test specified in § 80.176(b).

(vii) All gasoline blendstocks used to formulate the test fuel must be representative of normal refinery operations and shall be derived from conversion units downstream of distillation. Butanes and pentanes may be used for vapor pressure adjustment. The use of chemical grade streams is prohibited.

(2) [Reserved]

(c) *Test fuel for fuel injector deposit testing:* This paragraph provides specifications for the test fuels required for use in the test procedure specified in § 80.176(c). The test fuel must conform to the specifications in either paragraph (c)(1) or (c)(2) of this section. The same base test fuel must be used for deposit demonstration testing and for demonstrating compliance with the fuel injector deposit control standards in § 80.176(a).

(1) *Option 1 regarding the specifications for the test fuel used for fuel injector deposit testing.* (i) The test fuel must be a commercial full boiling range hydrocarbon gasoline or gasoline blending component, without oxygenates.

(ii) The test fuel containing no deposit control additives must produce at least 5 inoperable injectors valves when subjected to the fuel injector deposit test specified in § 80.176(c).

(2) *Option 2 regarding the specifications for the formulation of the test fuel used for fuel injector deposit testing.* (i) The test fuel must meet the requirements for federal emissions test gasoline specified in §§ 80.113 and 80.112 into which 4-methylbenzenethiol has been blended as a concentration of 56 mg/L.

(ii) The test fuel containing no deposit control additives must produce at least 4 inoperable injectors valves when subjected to the fuel injector deposit test specified in § 80.176(c).

■ 20. A new § 80.178 is added to subpart G to read as follows:

§ 80.178 Incorporation by reference.

(a) Certain material is incorporated by reference into this part with the approval of the Director of the Federal Register under 5 U.S.C. 552(a) and 1 CFR part 51. To enforce any edition other than that specified in this section, the Environmental Protection Agency (EPA) must publish notice of change in the **Federal Register** and the material must be available to the public. All approved material is available for inspection at the National Archives and Records Administration (NARA). For information on the availability of this material at NARA, call 202–741–6030 or go to: *http://www/archives.gov/federal_register/code_of_federal_regulations/ibr_locations.html.* This material is also available for inspection at the EPA Docket Center, Docket No. EPA–HQ–OAR–2005–0161, EPA/DC, EPA West, Room 3334, 1301 Constitution Ave. NW., Washington DC. The telephone

number for the Air Docket is (202) 566–1742. Also, this material is available from the source listed in paragraphs (b) and (c) of this section.

(b) ASTM International, 100 Barr Harbor Drive, P.O. Box C–700, West Conshohocken, Pennsylvania 19428 (1–800–262–1373, *www.astm.org*).

(1) ASTM D 5598–94, ''Standard Test Method for Evaluating Unleaded Automotive Spark-Ignition Engine Fuel for Electronic Port Fuel Injector Fouling,'' 1994; IBR approved for § 80.165.

(2) ASTM D 5500–94, ''Standard Test Method for Vehicle Evaluation of Unleaded Automotive Spark-Ignition Engine Fuel for Intake Valve Deposit Formation,'' 1994; IBR approved for § 80.165.

(3) ASTM D–6201–04(2009) (''ASTM D 6201''), Standard Test Method for Dynamometer Evaluation of Unleaded Spark-Ignition Engine Fuel for Intake Valve Deposit Formation; IBR approved for § 80.176.

(4) ASTM D 4814–11, ''Standard Specification for Automotive Spark-Ignition Engine Fuel'', IBR approved for § 80.177.

(5) ASTM D–4806–11a ''Standard Specification for Denatured Fuel Ethanol for Blending with Gasolines for Use as Automotive Spark-Ignition Engine Fuel'', IBR approved for § 80.177.

(c) California Air Resources Board, 1001 ''I'' Street, P.O. Box 2815, Sacramento, CA 95812 (800) 242–4450, *http://www.arb.ca.gov*).

(1) California Air Resources Board, ''Test Method for Evaluating Port Fuel Injector (PFI) Deposits in Vehicle Engines'', March 1, 1991; IBR approved for § 80.165.

(2) California Air Resources Board, ''BMW—10,000 Miles Intake Valve Test Procedure'', March 1, 1991; IBR approved for § 80.165.

Subpart H—[Amended]

■ 21. Section 80.330 is amended by revising paragraphs (c)(1), (d)(1), and (d)(2) to read as follows:

§ 80.330 What are the sampling and testing requirements for refiners and importers?

* * * * *

(c) * * *

(1) For purposes of paragraph (a) of this section, refiners and importers shall use the method provided in § 80.46(a)(1) or one of the alternative test methods listed in § 80.46(a)(3) to measure the sulfur content of gasoline they produce or import through November 29, 2014. Beginning November 30, 2014, for purposes of paragraph (a) of this section, refiners and importers shall use a method approved in § 80.47.

* * * * *

(d) * * *

(1) Refiners and importers shall use the method provided in § 80.46(a)(2) to measure the sulfur content of butane when the butane constitutes a batch of gasoline through November 29, 2014. Beginning November 30, 2014, refiners and importers shall use a method approved in § 80.47 to measure the sulfur content of butane when the butane constitutes a batch of gasoline.

(2) Except as provided in paragraph (d)(1) of this section, any ASTM sulfur test method for gaseous fuels may be used for quality assurance testing under §§ 80.340(b)(4) and 80.400, if the protocols of the ASTM method are followed and the alternative test method is correlated to the method provided in § 80.46(a)(2) through November 29, 2014. Beginning November 30, 2014, except as provided in paragraph (d)(1) of this section, refiners and importers shall use a method approved in § 80.47 to measure the sulfur content of butane.

* * * * *

■ 22. Section 80.370 is amended by:

■ a. Revising paragraph (a)(7)(iv).

■ b. Revising paragraph (d)(2).

§ 80.370 What are the sulfur reporting requirements?

* * * * *

(a) * * *

(7) * * *

(iv) The sulfur content of the batch, along with identification of the test method used to measure the sulfur content of the batch, as determined under § 80.330; and

* * * * *

(d) * * *

(2) Submitted to EPA by March 31 for the prior calendar year averaging period.

* * * * *

Subpart I—[Amended]

■ 23. Section 80.511 is amended by revising paragraphs (b)(4) and (b)(10) to read as follows:

§ 80.511 What are the per-gallon and marker requirements that apply to NRLM diesel fuel, ECA marine fuel, and heating oil downstream of the refiner or importer?

* * * * *

(b) * * *

(4) Except as provided in paragraphs (b)(5) through (8) of this section, the per-gallon sulfur standard of § 80.510(c) shall apply to all NRLM diesel fuel beginning August 1, 2014 for all downstream locations other than retail outlets or wholesale purchaser-consumer facilities, shall apply to all NRLM diesel fuel beginning October 1, 2014 for retail outlets and wholesale purchaser-consumer facilities, and shall apply to all NRLM diesel fuel beginning December 1, 2014 for all locations. This paragraph (b)(4) does not apply to LM diesel fuel produced from transmix or interface fuel that is sold or intended for sale in areas other than those listed in § 80.510(g)(1) or (g)(2), as provided by § 80.513(f).

* * * * *

(10) For the purposes of this subpart, on any occasion where a distributor directly dispenses fuel into vehicles or equipment from a mobile facility such as a tanker truck, the distributor shall be treated as a retailer, and the mobile facility shall be treated as a retail outlet.

■ 24. Section 80.572 is amended by revising paragraph (a) to read as follows:

§ 80.572 What labeling requirements apply to retailers and wholesale purchaser-consumers of Motor Vehicle, NR, LM and NRLM diesel fuel and heating oil beginning June 1, 2010?

* * * * *

(a) From June 1, 2010 through November 30, 2014, any retailer or wholesale purchaser-consumer who sells, dispenses, or offers for sale or dispensing, motor vehicle diesel fuel subject to the 15 ppm sulfur standard of § 80.520(a)(1), must affix the following conspicuous and legible label, in block letters of no less than 24-point bold type, and printed in a color contrasting with the background, to each pump stand:

ULTRA-LOW SULFUR HIGHWAY DIESEL FUEL (15 ppm Sulfur Maximum)
Required for use in all highway diesel vehicles and engines.
Recommended for use in all diesel vehicles and engines.

* * * * *

■ 25. Section 80.573 is amended by revising paragraph (a) to read as follows:

§ 80.573 What labeling requirements apply to retailers and wholesale purchaser-consumers of NRLM diesel fuel and heating oil beginning June 1, 2012?

* * * * *

(a) From June 1, 2012 through September 30, 2014, for pumps dispensing NRLM diesel fuel subject to the 15 ppm sulfur standard of § 80.510(c):

ULTRA-LOW SULFUR NON-HIGHWAY DIESEL FUEL (15 ppm Sulfur Maximum)
Required for use in all model year 2011 and later nonroad diesel engines.
Recommended for use in all other non-highway diesel engines.
WARNING
Federal law *prohibits* use in highway vehicles or engines.

* * * * *

■ 26. Section 80.574 is revised to read as follows:

§ 80.574 What labeling requirements apply to retailers and wholesale purchaser-consumers of ECA marine fuel beginning June 1, 2014?

(a) Any retailer or wholesale purchaser-consumer who sells, dispenses, or offers for sale or dispensing ECA marine fuel must prominently and conspicuously display in the immediate area of each pump stand from which ECA marine fuel is offered for sale or dispensing, one of the following legible labels, as applicable, in block letters of no less than 24-point bold type, printed in a color contrasting with the background:

(1) From June 1, 2014 and beyond, for pumps dispensing ECA marine fuel subject to the 1,000 ppm sulfur standard of § 80.510(k):

1,000 ppm SULFUR ECA MARINE FUEL (1,000 ppm Sulfur Maximum).
For use in Category 3 (C3) marine vessels only.
WARNING
Federal law *prohibits* use in any engine that is not installed on a C3 marine vessel; use of fuel oil with a sulfur content greater than 1,000 ppm in an ECA is prohibited except as allowed by 40 CFR part 1043.

(2) The labels required by paragraph (a)(1) of this section must be placed on the vertical surface of each pump housing and on each side that has gallon and price meters. The labels shall be on the upper two-thirds of the pump, in a location where they are clearly visible.

(b) Alternative labels to those specified in paragraph (a) of this section may be used as approved by EPA.

(1) *For US Mail:* U.S. EPA, Attn: Diesel Sulfur Alternative Label Request, 6406J, 1200 Pennsylvania Avenue NW., Washington, DC 20460.

(2) *For overnight or courier services:* U.S. EPA, Attn: Diesel Sulfur Alternative Label Request, 6406J, 1310 L Street NW., 6th floor, Washington, DC 20005. (202) 343–9038.

■ 27. Section 80.580 is amended by:

■ a. Revising paragraph (e) introductory text.

■ b. Revising paragraph (e)(1) introductory text.

■ c. Revising paragraphs (e)(1)(i) through (e)(1)(iv).

§ 80.580 What are the sampling and testing methods for sulfur?

* * * * *

(e) *Materials incorporated by reference.* The Director of the Federal Register approved the incorporation by reference of the documents listed in this section as prescribed in 5 U.S.C. 552(a) and 1 CFR 51. Anyone may inspect copies at the U.S. EPA, Air and Radiation Docket and Information Center, 1301 Constitution Ave. NW., Room B102, EPA West Building, Washington, DC, 20460, under EPA docket ID Number EPA–HQ–OAR–2011–0135, or at the National Archives and Records Administration (NARA). The telephone number for the Air Docket Public Reading Room is (202) 566–1742. For information on the availability of this material at NARA, call 202–741–6030 or go to: *http://www.archives.gov//federal_register/code_of_federal_regulations/ibr_locations.html.* For further information on these test methods, please contact the Environmental Protection Agency at 734–214–4582.

(1) *ASTM International material.* Anyone may purchase copies of these materials from ASTM International, 100 Barr Harbor Dr., West Conshohocken, PA 19428–2959, or by contacting ASTM International customer service at 610–832–9585, or by contacting the email address of *service@astm.org* from the ASTM International Web site of *http://www.astm.org.*

(i) ASTM International standard method D2622–10 (''ASTM International D2622''), ''Standard Test Method for Sulfur in Petroleum Products by Wavelength Dispersive X-Ray Fluorescence Spectrometry'', approved February 15, 2010.

(ii) [Reserved]

(iii) ASTM International standard method D4294–10 (''ASTM International D4294''), ''Standard Test Method for Sulfur in Petroleum Products by Energy Dispersive X-Ray Fluorescence Spectrometry'', approved February 15, 2010.

(iv) ASTM International standard method D5453–09 (''ASTM International D5453''), ''Standard Test Method for Sulfur in Petroleum Products by Energy Dispersive X-Ray Fluorescence Spectrometry'', approved June 15, 2009.

* * * * *

■ 28. Section 80.585 is amended by revising paragraph (d)(4) to read as follows:

§ 80.585 What is the process for approval of a test method for determining the sulfur content of diesel or ECA marine fuel?

* * * * *

(d) * * *

(4) The approval of any test method under paragraph (b) of this section shall be valid for five years from the date of approval by the Administrator. After the five year period has ceased, in order for the test method approval to remain valid, the test method must be resubmitted for approval with applicable precision and accuracy information contained in § 80.584(a) and (b). If, however, the test method is later approved by a voluntary consensus-based standards body, the approval shall remain valid as long as the conditions of paragraph (a) of this section are met.

* * * * *

■ 29. Section 80.604 is amended by revising paragraphs (f)(3) and (4) to read as follows:

§ 80.604 What are the annual reporting requirements for refiners and importers of NRLM diesel fuel?

* * * * *

(f) * * *

(3) Except for small refiners subject to § 80.554(d), submitted to EPA by September 1 each year for the prior annual compliance period. Small refiners subject to the provisions of § 80.554(d), reports must be submitted by September 1 for the previous reporting period.

(4) With the exception of reports required under paragraph (b)(3) of this section, no reports will be required under this section after September 1, 2014.

Subpart L—[Amended]

■ 30. Section 80.1235 is amended by revising paragraphs (a)(6) and (b)(2) to read as follows:

§ 80.1235 What gasoline is subject to the benzene requirements of this subpart?

(a) * * *

(6) Blendstock that is combined with PCG to produce gasoline must be sampled and tested in accordance with the provisions at § 80.1347(a)(5) or (6).

(b) * * *

(2) Oxygenate added to PCG downstream of the refinery that produced the PCG, or downstream of the import facility where the PCG was imported, shall not be included in a refiner's or importer's compliance calculations unless the refiner or importer that produced or imported the PCG complies with the requirements of § 80.1238(b). On any occasion where any person downstream of the refinery or importer that produced or imported PCG adds oxygenate to such product, it shall not include the volume and benzene content of the oxygenate in any compliance calculations or for credit generation under this subpart.

* * * * *

■ 31. Section 80.1238 is amended by revising paragraph (b)(1) to read as follows:

§ 80.1238 How is a refinery's or importer's average benzene concentration determined?

* * * * *

(b) * * *

(1) For oxygenate added to conventional gasoline or CBOB, the refiner or importer must comply with the requirements of § 80.101(d)(4)(ii) and the benzene content must be measured by sampling the ethanol actually added to the conventional gasoline or CBOB and testing it for benzene content.

* * * * *

■ 32. Section 80.1347 is amended as follows:

■ a. By revising paragraphs (a)(3)(i) and (a)(5).

■ b. By adding a new paragraph (a)(6).

§ 80.1347 What are the sampling and testing requirements for refiners and importers?

(a) * * *

(3)(i) Each sample shall be tested in accordance with the methodology specified at § 80.46(e) through November 29, 2014, to determine its benzene concentration for compliance with the requirements of this subpart. Beginning November 30, 2014, each sample shall be tested in accordance with the methodology specified at § 80.46(e) or § 80.47 to determine its benzene concentration for compliance with the requirements of this subpart. Any negative test result must be reported as zero.

* * * * *

(5) *Exclusion of previously certified gasoline (PCG).* (i) Any refiner who uses PCG to produce gasoline at a refinery, must exclude the PCG for purposes of demonstrating compliance with the benzene standards at § 80.1230.

(ii) To accomplish the exclusion required in paragraph (a)(5)(i) of this section, the refiner must determine the volume and benzene content of the PCG used at the refinery and the volume and benzene content of gasoline produced at the refinery, and use the compliance calculation procedures in paragraphs (a)(5)(iii) and (iv) of this section.

(iii) For each batch of PCG that is used to produce gasoline the refiner must include the volume and benzene content of the PCG as a negative volume and a positive benzene content in the refiner's compliance calculations in accordance with the requirements at § 80.1238.

(iv) For each batch of gasoline produced at the refinery using PCG and blendstock, the refiner must determine the volume and benzene content of the combined product and include each batch for purposes of benzene compliance in the refinery's compliance calculations at § 80.1240 without regard to the presence of previously certified gasoline in the batch.

(v) The refiner must use any PCG that it includes as a negative batch in its compliance calculations pursuant to § 80.1240 as a component in gasoline production during the annual averaging period in which the PCG was included as a negative batch in the refiner's compliance calculations.

(vi) Any negative annual average value must be reported as zero.

(vii) The refiner must also comply with § 80.65(i) when producing RBOB or RFG and § 80.101(g)(9) when producing conventional gasoline.

(6) As an alternative to the sampling and testing requirements in paragraph (a)(5) of this section, a refiner who produces gasoline by blending blendstock into PCG may sample and test each batch of blendstock when received at the refinery to determine the volume and benzene content, and treat each blendstock receipt as a separate batch for purposes of demonstrating compliance with the benzene standards in § 80.1230, and for benzene reporting.

* * * * *

■ 33. Section 80.1348 is revised to read as follows:

§ 80.1348 What gasoline sample retention requirements apply to refiners and importers?

(a) Through November 29, 2014, the gasoline sample retention requirements specified in subpart H for the gasoline sulfur provisions apply for the purpose of complying with the requirements of this subpart L, except that in addition to including the sulfur test result as provided by § 80.335(a)(4)(ii), the refiner, importer, or independent laboratory shall also include with the retained sample the test result for benzene as conducted pursuant to § 80.46(e).

(b) Beginning November 30, 2014, pursuant to § 80.47, the gasoline sample retention requirements specified in subpart O of this part for the gasoline sulfur provisions apply for the purpose of complying with the requirements of this subpart L, except that in addition to including the sulfur test result as provided by § 80.335(a)(4)(ii), the refiner, importer, or independent laboratory shall also include with the retained sample the test result for benzene as conducted pursuant to § 80.46(e).

■ 34. A new § 80.1349 is added to subpart L to read as follows:

§ 80.1349 Alternative sampling and testing requirements for importers who import gasoline into the United States by truck.

Importers who import conventional gasoline into the United States by truck may comply with the sampling and testing requirements in § 80.101(i)(3) instead of the requirements to sample and test every batch of gasoline under § 80.1347. An importer that uses this approach must meet the 0.62 volume percent benzene standard on a per-gallon basis.

■ 35. Section 80.1354 is amended by:

■ a. Revising paragraph (b)(2).

■ b. Revising paragraph (d)(2).

§ 80.1354 What are the reporting requirements for the gasoline benzene program?

* * * * *

(b) * * *

(2)(i) The annual average benzene concentration, along with identification of the test method(s) used to measure the annual average benzene concentration, per § 80.1238.

(ii) The maximum average benzene concentration, along with identification of the test method(s) used to measure the maximum average benzene concentration, per § 80.1240(b).

* * * * *

(d) * * *

(2) Submitted to EPA by March 31 each year for the prior calendar year averaging period.

* * * * *

■ 36. Section 80.1451 is amended by:

■ a. Revising paragraph (a)(1) introductory text.

■ b. Revising paragraph (f)(2).

§ 80.1451 What are the reporting requirements under the RFS program?

(a) * * *

(1) Annual compliance reports for the previous compliance period shall be submitted by March 31 of each year and shall include all of the following information:

* * * * *

(f) * * *

(2) Quarterly reports shall be submitted by the required deadline as shown in Table 1 to § 80.1451. Any reports generated by EMTS must be reviewed, supplemented, and/or corrected if not complete and accurate, and verified by the owner or responsible corporate officer prior to submittal.

TABLE 1 TO § 80.1451—QUARTERLY REPORTING DEADLINES

Calendar quarter	Time period covered	Quarterly report deadline
Quarter One	January 1–March 31	June 1.
Quarter Two	April 1–June 30	September 1.
Quarter Three	July 1–September 30	December 1.
Quarter Four	October 1–December 31	March 31.

* * * * *

■ 37. A new subpart O is added to part 80 to read as follows:

Subpart O—Gasoline Sulfur

Sec.

80.1600 Additional definitions for subpart O.
80.1601 Fuels subject to the provisions of this subpart.
80.1602 Implementation dates for refiners and importers.
80.1603 Gasoline sulfur standards for refiners and importers.
80.1604 Gasoline sulfur standards and requirements for parties downstream of refiners and importers.
80.1605 Deficit carry-forward for refiners and importers.
80.1606 [Reserved]
80.1607 Gasoline sulfur standards and requirements for transmix processors and transmix blenders.
80.1608 [Reserved]
80.1609 Oxygenate blender requirements.
80.1610 Standards and requirements for producers of denatured fuel ethanol and other oxygenates for use by gasoline oxygenate blenders.
80.1611–80.1612 [Reserved]
80.1613 Standards and other requirements for gasoline additive manufacturers and blenders.
80.1614 [Reserved]
80.1615 Credit generation.
80.1616 Credit use and transfer.
80.1620 Small refiner definition.
80.1621 Small volume refinery definition.
80.1622 Approval for small refiner and small volume refinery status.
80.1623–80.1624 [Reserved]
80.1625 Hardship provisions.
80.1630 Sampling and testing requirements for refiners and importers.
80.1631 Sample retention requirements.
80.1640 Standards and requirements that apply to refiners producing gasoline by blending blendstocks into previously certified gasoline (PCG).
80.1641 Alternative sulfur standards and requirements that apply to importers who transport gasoline by truck.
80.1642–80.1649 [Reserved]
80.1650 Registration.
80.1651 Product transfer document requirements.
80.1652 Reporting requirements.
80.1653 Recordkeeping.
80.1654 California gasoline requirements.
80.1655 National security exemption.
80.1656 Exemptions for gasoline used for research, development, or testing purposes.
80.1657 [Reserved]
80.1658 Requirements for gasoline for use in American Samoa, Guam, and the Commonwealth of the Northern Mariana Islands.
80.1659 [Reserved]
80.1660 Prohibited acts.
80.1661 What evidence may be used to determine compliance with the prohibitions and requirements of this subpart and liability for violations of this subpart?
80.1662 Liability for violations under subpart O.
80.1663 Defenses for a violation of a prohibited act under subpart O.
80.1664 [Reserved]
80.1665 Penalties.
80.1666 Additional requirements for foreign small refiners and foreign small volume refineries.
80.1667 Attest engagement requirements.
80.1668–80.1674 [Reserved]
80.1675 Incorporation by reference.

Subpart O—Gasoline Sulfur

§ 80.1600 Additional definitions for subpart O.

The definitions of § 80.2 and the following additional definitions apply to this subpart O:

California gasoline means any gasoline designated by a refiner or importer for use in California.

Certified Sulfur-FRGAS has the meaning given in § 80.1666(a)(5).

Foreign refiner is a person who meets the definition of refiner under § 80.2(i) for a foreign refinery.

Foreign refinery means a refinery that is located outside the United States, the Commonwealth of Puerto Rico, the Virgin Islands, Guam, American Samoa, and the Commonwealth of the Northern Mariana Islands (collectively referred to in this subpart as ''the United States'').

Non-Certified Sulfur-FRGAS has the meaning given in § 80.1666(a)(6).

Non-Sulfur-FRGAS has the meaning given in § 80.1666(a)(4).

Sulfur-FRGAS has the meaning given in § 80.1666(a)(3).

Transmix has the meaning given at § 80.84(a)(2).

Transmix blender has the meaning given at § 80.84(a)(7).

Transmix gasoline product (TGP) has the meaning given at § 80.84(a)(3).

Transmix processing facility has the meaning given at § 80.84(a)(4).

Transmix processor has the meaning given at § 80.84(a)(5).

§ 80.1601 Fuels subject to the provisions of this subpart.

(a) For the purposes of this subpart, the following fuels are subject to the

standards and requirements of this subpart:

(1) Reformulated and conventional gasoline and RBOB, and CBOB (collectively called ''gasoline'' unless otherwise specified).

(2) Any blendstock (not including oxygenates) blended with PCG, as defined in § 80.2(d), subject to the provisions of § 80.1640.

(3) Oxygenates blended with gasoline, RBOB, or CBOB.

(b) For the purposes of this subpart, the following fuels are not subject to the standards and requirements of this subpart:

(1) Gasoline that is used to fuel aircraft, racing vehicles or racing boats that are used only in sanctioned racing events, provided that:

(i) Product transfer documents associated with such gasoline, and any pump stand from which such gasoline is dispensed, identify the gasoline either as gasoline that is restricted for use in aircraft, or as gasoline that is restricted for use in racing motor vehicles or racing boats that are used only in sanctioned racing events;

(ii) The gasoline is completely segregated from all other gasoline throughout production, distribution and sale to the ultimate consumer; and

(iii) The gasoline is not made available for use as motor vehicle gasoline, or dispensed for use in motor vehicles, except for motor vehicles used only in sanctioned racing events.

(2) California gasoline as defined in § 80.1600 subject to the provisions of § 80.1654.

(3) Gasoline that is exported for sale and use outside the U.S.

(4) Exempt fuels under §§ 80.1655 (national security exemptions), 80.1656 (gasoline used for research, development, or testing purposes), and 80.1658 (gasoline used in American Samoa, Guam, and the Northern Mariana Islands).

§ 80.1602 Implementation dates for refiners and importers.

(a) The standards and requirements for gasoline sulfur under this subpart O (at § 80.1603) shall apply to gasoline produced or imported by any refiner or importer beginning January 1, 2017, except as provided by the credit provisions of §§ 80.1615 and 80.1616, and the provisions applicable to small refiners and small volume refineries.

(b) The standards and requirements for gasoline sulfur under subpart H of this part shall continue to apply until the gasoline produced or imported by any refiner or importer is required to comply with the standards and requirements under this subpart O.

§ 80.1603 Gasoline sulfur standards for refiners and importers.

(a) *Sulfur standards.* (1) *Annual average standard.* (i) The refinery or importer annual average gasoline sulfur standard is 10.00 parts per million (ppm) or milligrams per kilogram (mg/kg), except as provided in paragraph (a)(1)(iii) of this section.

(ii) The averaging period is a calendar year (January 1 through December 31).

(iii) The refinery or importer annual average gasoline sulfur standard is the maximum average sulfur level allowed for gasoline produced at a refinery or imported by an importer during each calendar year beginning January 1, 2017, except as provided by the following:

(A) The credit use provisions of § 80.1616.

(B) Beginning January 1, 2020, for small refiners and small volume refineries approved pursuant to the provisions of § 80.1622. Small refiners and small volume refineries will continue to be subject to the provisions of subpart H through December 31, 2019 (or until compliance with this subpart O begins).

(C) Fuels not subject to the standards and requirements of this subpart O as specified in § 80.1601(b).

(iv) The annual average sulfur level is calculated in accordance with paragraph (c) of this section.

(2) *Per-gallon cap standard.* (i) The refinery or importer per-gallon cap standard is 80 ppm, on a per-gallon basis except as otherwise provided by this section.

(ii) The per-gallon cap of paragraph (a)(2)(i) of this section is the maximum sulfur level allowed for any batch of gasoline produced at a refinery or imported by an importer beginning January 1, 2017, except for fuels not subject to the standards and requirements of this subpart O as specified in § 80.1601(b).

(3) The refinery or importer annual average gasoline sulfur standard may be met using credits as provided under § 80.1616. Credits cannot be used to meet the applicable per-gallon standard.

(b) [Reserved]

(c) *Calculation of the annual average sulfur level.* (1) The annual refinery or importer average gasoline sulfur level is calculated as follows:

$$S_a = \frac{\sum_{i=1}^{n}(V_i \ x \ S_i)}{\sum_{i=1}^{n} V_i}$$

Where:

S_a = The refinery or importer annual average sulfur level, in ppm (mg/kg).

V_i = The volume of gasoline produced or imported in batch i, in gallons.

S_i = The sulfur content of batch i determined under § 80.1630, in ppm (mg/kg).

n = The number of batches of gasoline produced or imported during the averaging period.

i = Individual batch of gasoline produced or imported during the averaging period.

(2) The annual average sulfur level calculation in paragraph (c)(1) of this section shall be conducted to two decimal places using the rounding procedure specified in § 80.9.

(d) *Oxygenate added downstream from the refinery or import facility.* A refiner or importer may include oxygenate added downstream from the refinery or import facility when calculating the sulfur content, provided the following requirements are met:

(1) For oxygenate added to conventional gasoline or CBOB, the refiner or importer must comply with the requirements of § 80.101(d)(4)(ii), except that the sulfur content and volume of the oxygenate shall be determined in accordance with paragraph (d)(3) of this section.

(2) For oxygenate added to RBOB, the refiner or importer must comply with the requirements of § 80.69(a), except that the sulfur content and volume of the oxygenate shall be determined in accordance with paragraph (d)(3) of this section.

(3) Where oxygenate added downstream from the refinery or import facility is included in calculating the sulfur content under this paragraph (d):

(i) The refiner or importer must separately test any RBOB or CBOB for sulfur content and use that test result in calculating the sulfur content of the RFG or conventional gasoline and calculate the effect of downstream added ethanol by using the assumptions in paragraphs (d)(3)(ii) and (iii) of this section. The reported volume of the batch is the combined volume of the RBOB or CBOB and the downstream added oxygenate.

(ii) For RBOB, the sulfur test result obtained from testing a hand blend under the terms of § 80.69(a) shall not be used for sulfur reporting purposes.

(iii) The refiner or importer must use an assumed sulfur content of 10.00 ppm for the oxygenate added downstream.

(iv) For ethanol added downstream, the refiner or importer calculations shall assume that 10.00 volume percent ethanol is added to the RBOB unless some lesser amount of ethanol is actually blended.

(v) RBOB, CBOB, and conventional gasoline must meet the per-gallon sulfur standard of paragraph (a)(2) of this section prior to calculating any dilution from the oxygenate added downstream.

(4) On any occasion where any person downstream of the refinery or importer that produced or imported previously certified gasoline, CBOB or RBOB adds

oxygenate to such product, it shall not include the volume and sulfur content of the oxygenate in any compliance calculations or for credit generation under this subpart O.

(e) *Exclusions.* Refiners and importers must exclude from compliance calculations all of the following:

(1) Gasoline that was not produced at the refinery or imported by the importer.

(2) In the case of an importer, gasoline that was imported as Certified Sulfur-FRGAS.

(3) Blendstocks transferred to others, except RBOB and CBOB as provided in this subpart O.

(4) PCG.

(5) Gasoline exempted from standards under § 80.1601(b).

(f) *Compliance calculation for the annual average sulfur standard.* (1) Compliance by a refinery or importer with the gasoline sulfur annual average standard at paragraph (a)(1) of this section is achieved if, for calendar year y, $CSV_y \leq (V_y \times 10)$, as determined by the following equation:

$$CSV_y = (V_y \times S_a) + D_{(y-1)} - OC$$

Where:

CSV_y = Compliance sulfur value for year y, in ppm-gallons.

V_y = Total gasoline volume produced or imported in year y, in gallons.

S_a = Annual average sulfur level calculated in accordance with paragraph (c) of this section, in ppm (mg/kg).

$D_{(y-1)}$ = Sulfur deficit from the previous reporting period, per § 80.1605, in ppm-gallons.

OC = Sulfur credits obtained by the refinery or importer, in ppm-gallons.

(2) Sulfur credits used in the calculation specified in paragraph (f)(1) of this section must be used in accordance with the requirements at § 80.1616.

(3) Compliance with the gasoline sulfur annual average standard at paragraph (a)(1) of this section is not achieved, and a deficit is created per § 80.1605, if for calendar year y, $CSV_y > (V_y \times 10)$. The deficit value to be included in the following year's compliance calculation per paragraph (f) of this section is calculated as follows:

$$D_y = CSV_y - (V_y \times 10_y)$$

Where:

D_y = Sulfur deficit created in compliance period y, in ppm-gallons.

§ 80.1604 Gasoline sulfur standards and requirements for parties downstream of refiners and importers.

(a) The sulfur standard for gasoline at any downstream location shall be determined in accordance with the provisions of this section. A downstream location is any point in the gasoline distribution system downstream from refineries and import facilities, including, but not limited to, facilities of any of the following parties:

(1) Distributors.

(2) Carriers.

(3) Oxygenate blenders.

(4) Retailers.

(5) Wholesale purchaser-consumers.

(b) Except as otherwise provided in this subpart O, the sulfur content of gasoline at any downstream location shall not exceed 95 ppm, on a per-gallon basis, beginning January 1, 2017.

§ 80.1605 Deficit carry-forward for refiners and importers.

(a) *Deficit carry-forward.* (1) A refiner or importer may exceed the annual average sulfur standard for a given calendar year, creating a compliance deficit, provided that the requirements of paragraph (a)(2) of this section are met.

(2) When a compliance deficit is created per paragraph (a)(1) of this section, in the calendar year following the year the standard is not met, the refinery or importer must:

(i) Achieve compliance with the annual average sulfur standard in § 80.1603(a)(1); and

(ii) Use additional sulfur credits sufficient to offset the compliance deficit of the previous year.

(b) The compliance deficit value shall be calculated in accordance with § 80.1603(f)(3).

§ 80.1606 [Reserved]

§ 80.1607 Gasoline sulfur standards and requirements for transmix processors and transmix blenders.

Transmix processors and transmix blenders may comply with the following requirements instead of the requirements and standards otherwise applicable to a refiner under this subpart O.

(a) Any transmix processor who recovers transmix gasoline product (TGP) from transmix through transmix processing under § 80.84(c) must show through sampling and testing (using the methods in § 80.1630) that the TGP meets the applicable sulfur standards under § 80.1604(b), prior to the TGP leaving the transmix processing facility.

(b) The sampling and testing required under paragraph (a) of this section shall be conducted following each occasion TGP is produced.

(c) Any transmix processor who produces gasoline by adding blendstock to TGP must, for such blendstock, comply with all requirements and standards that apply to a refiner under this subpart O, and must meet the applicable downstream sulfur standards under § 80.1604 for the gasoline produced by blending blendstock and TGP, prior to the gasoline leaving the transmix processing facility.

(d) Any transmix processor who produces gasoline by blending blendstock into TGP must meet the sampling and testing requirements of this subpart O through either of the methods provided in paragraph (d)(1) of this section or through the alternative method provided in paragraph (d)(2) of this section.

(1)(i) Sample and test the blendstock when received at the transmix processing facility, using the methods specified in § 80.1630, to determine the volume and sulfur content, and treat each volume of blendstock that is blended into a volume of TGP as a separate batch for purposes of calculating and reporting compliance with the applicable annual average and per-gallon cap sulfur standards in § 80.1603.

(ii) Use sulfur test results of the blendstock supplier provided that all the following requirements are met:

(A) Sampling and testing by the blendstock supplier is performed using the methods specified in § 80.1630.

(B) Testing for the sulfur content of the blendstock in the supplier's storage tank must be conducted following the last receipt of blendstock into the supplier's storage tank that supplies the transmix processor.

(C) The transmix processor must obtain a copy of the blendstock supplier's test results, reflecting the sulfur content of each load of blendstock supplied to the transmix processor, at the time of each transfer of blendstock to the transmix processor.

(D) The transmix processor must conduct a quality assurance program of sampling and testing for each blendstock supplier. The frequency of blendstock sampling and testing must be one sample for every 500,000 gallons of blendstock received or one sample every 3 months, whichever results in more frequent sampling.

(iii) If any of the requirements of paragraph (d)(1)(ii) of this section are not met, in whole or in part, for any blendstock blended into TGP, that blendstock is deemed in violation of the gasoline sulfur standards of this subpart O.

(2) As an alternative to the sampling and testing procedures described in paragraph (d)(1) of this section, the following procedures may be used:

(i) Sample and test each batch of TGP and determine the volume of the TGP.

(ii) Sample and test the gasoline produced by blending blendstock into TGP, and determine its volume.

(iii) Calculate the sulfur content and the volume of the batch by subtracting the volume and sulfur content of the TGP from the volume and sulfur content of the gasoline after blendstock blending. For purposes of compliance and reporting, the sulfur content shall be the calculated volume and sulfur content of the blendstock, and the applicable standards shall be the average and cap standards in § 80.1603. The applicable cap standard of the gasoline blend shall be the cap standard under § 80.1604.

(iv) Tests shall be performed using the methods specified in § 80.1630, to determine the sulfur content of the batch.

(v) The sulfur content of each batch of gasoline produced by blending blendstock into TGP must be no greater than the downstream sulfur standard under § 80.1604 applicable to the designation of the TGP.

(e) Any transmix blender who produces gasoline by blending transmix, or mixtures of gasoline and distillate fuel described in § 80.84(e), into previously certified gasoline under § 80.84(d) must meet the applicable downstream sulfur standards under § 80.1604 for the gasoline produced by blending transmix and previously certified gasoline and the endpoint standard specified in § 80.84.

(f) Any transmix processor or transmix blender who adds any feedstock to its transmix other than gasoline, distillate fuel, or gasoline blendstocks from pipeline interface must meet all requirements and standards that apply to a refiner under this subpart O for all gasoline it produces during a compliance period.

§ 80.1608 [Reserved]

§ 80.1609 Oxygenate blender requirements.

(a) Oxygenate blenders who blend only oxygenate that complies with the requirements of paragraph (b) of this section into gasoline downstream of the refinery that produced the gasoline or the import facility where the gasoline was imported are not subject to the refiner or importer requirements of this subpart for such gasoline. Such oxygenate blenders are subject to the requirements of paragraph (b) of this section, the requirements and prohibitions applicable to downstream parties, the requirements of § 80.1603(d)(4), and the prohibition specified in § 80.1660(e).

(b) Beginning March 1, 2017, the DFE or other oxygenate used must comply with the requirements of § 80.1610. Prior to March 1, 2017, DFE is subject to the sulfur requirements of § 80.385(e).

§ 80.1610 Standards and requirements for producers of denatured fuel ethanol and other oxygenates for use by gasoline oxygenate blenders.

Beginning January 1, 2017, producers of denatured fuel ethanol (DFE) or other oxygenates for use by oxygenate blenders under § 80.1609 must comply with the following requirements:

(a) *Standards.* (1) The sulfur content must not be greater than 10 ppm as determined in accordance with the test requirements of § 80.1630.

(2) The DFE or other oxygenate must be composed solely of carbon, hydrogen, nitrogen, oxygen and sulfur.

(3) In the case of DFE, only gasoline, RBOB, CBOB, or natural gas liquids may be used as denaturants.

(4) The concentration of all denaturants used in DFE is limited to a maximum of 2. volume percent.

(b) *Registration.* Unless registered under § 80.1450, the producer of DFE or other oxygenate must register with EPA pursuant to the requirements of § 80.1650.

(c) *PTDs.* The producer of DFE or other oxygenate must initiate a PTD for each batch of DFE or other oxygenate that it ships from its facility which contains the statement in either paragraph (c)(1) or (c)(2) of this section, as applicable.

(1) For DFE, ''Meets EPA standards for denatured fuel ethanol for use in gasoline''; or

(2) For oxygenates other than DFE, ''Meets EPA standards for motor fuel oxygenates for use in gasoline''

(3) PTDs that are complaint with the requirements in paragraph (c) of this section must be transferred from each party transferring oxygenate to each party that receives oxygenate through to the oxygenate blender.

(d) *Batch numbers.* Every batch of oxygenate produced or imported at oxygenate production or import facility shall be assigned a number (the ''batch number''), consisting of the EPA-assigned oxygenate producer or importer registration number, the EPA facility registration number, the last two digits of the year in which the batch was produced, and a unique number for the batch, beginning with the number one for the first batch produced or imported each calendar year and each subsequent batch during the calendar year being assigned the next sequential number (e.g., 4321–54321–95–000001, 4321–543321–95–000002, etc.)

§§ 80.1611–80.1612 [Reserved]

§ 80.1613 Standards and other requirements for gasoline additive manufacturers and blenders.

Gasoline additive manufacturers and blenders must meet the following requirements:

(a) Gasoline additive manufacturers, as defined in 40 CFR 79.2(f), must meet the following requirements:

(1)(i) Except as otherwise provided, this section applies to any additive, as defined in 40 CFR 79.2(e), manufactured for use in gasoline that is not an oxygenate compound, and that is sold for use at a concentration of less than 1.0% by volume.

(ii) Oxygenate compound additives subject to the 10 ppm per-gallon sulfur standard and the requirements of § 80.1610 are not subject to the provisions of this section except for the provisions of paragraph (b)(1) of this section.

(2) The additive must contribute no more than 3 ppm on a per gallon basis to the sulfur content of gasoline when used at the maximum recommended treatment rate.

(3) The additive manufacturer must maintain records of its additive production quality control activities which demonstrates that the sulfur content of additive production batches complies with the sulfur requirement in paragraph (a)(1) of this section and make these records available upon request.

(4) The maximum treatment rate on the product transfer document for the additive must state all the following:

(i) The maximum registered concentration.

(ii) The maximum allowed treatment rate which corresponds to the maximum registered concentration. The maximum allowed concentration must comply with the requirements in paragraph (a)(2) of this section.

(b) The following provisions apply to parties who are downstream of the gasoline refiner or importer and who blend additives to gasoline, RBOB or CBOB and who are not refiners.

(1) On any occasion where the additive blender is solely acting as an oxygenate blender, as defined in § 80.2(mm), it is subject to the prohibition in § 80.1660(e) and the downstream gasoline sulfur standard of § 80.1604(b).

(2) On any occasion where an additive blender blends an additive (subject to the requirements of § 80.1613(a)) at a concentration of less than 1.0% by volume, it is subject to the prohibition in § 80.1660(f) and the downstream gasoline sulfur standard of § 80.1604(b).

(3) On any occasion where an additive blender blends an additive at a concentration of 1.0% by volume or greater, it is a fuel manufacturer as defined in 40 CFR 79.2(d), and is subject to all the provisions that apply to refiners under this subpart O.

§ 80.1614 [Reserved]

§ 80.1615 Credit generation.

(a) *Who may generate credits?* Credits may be generated under this subpart O, as provided in paragraphs (b), (c), and (d) of this section, by the following entities:

(1) U.S. refiners, including small refiners under § 80.1620, and refiners owning small volume refineries under § 80.1621. Foreign refiners may not generate credits.

(2) Importers.

(b) *Early credit generation—January 1, 2014 through December 31, 2016.* (1) Early credits may be generated for gasoline produced or imported from January 1, 2014 through December 31, 2016, by a refiner, including small refiners and owners of small volume refineries approved pursuant to § 80.1622, and importers.

(2) A refiner or importer may generate early credits for gasoline it produces at a refinery or imports during an annual averaging period when its annual average sulfur level, calculated in accordance with the provisions of § 80.1603(c), is less than 30 ppm.

(3)(i) The number of early credits generated shall be calculated annually for each applicable averaging period according to the following equation:

$$EC_a = [V_a \times (30 - S_a)] - CR_a$$

Where:

EC_a = Early credits generated during the annual averaging period, in ppm-gallons, for use pursuant to § 80.1616.

S_a = Annual average sulfur level, calculated in accordance with the provisions of § 80.1603(c), in ppm.

V_a = Total volume of gasoline produced or imported during the averaging period, in gallons.

CR_a = Credits generated during the annual averaging period per § 80.310, in ppm-gallons, for use pursuant to subpart H of this part.

(ii) No credits shall be generated unless the value of EC_a is positive.

(iii) The value of EC_a shall be rounded to the nearest ppm-gallon in accordance with the rounding procedure specified in § 80.9.

(4) A refiner or importer may include any downstream added oxygenates included in its RFG or conventional gasoline volume under the provisions of §§ 80.69 and 80.101(d)(4), respectively, for the purpose of generating credits.

(5) All, some, or no credits generated during the time period specified in paragraph (b)(1) of this section must be designated as subject to the requirements of subpart H of this part. Any remaining credits must be designated as subject to the requirements of this subpart O.

(c) *Standard credit generation—beginning January 1, 2017.* (1) Refiners, including small refiners and owners of small volume refineries approved pursuant to § 80.1622, and importers may generate standard credits for the gasoline produced at a refinery or imported during an annual averaging period when the annual average sulfur level of the refiner, refinery or importer, as applicable, and as calculated in accordance with the provisions of § 80.1603(c), is less than 10 ppm.

(2)(i) The number of standard credits generated shall be calculated annually for each applicable averaging period according to the following equation:

$$SC_a = [V_a \times (10 - S_a)] - CR_a$$

Where:

SC_a = Standard credits generated during the annual averaging period, in ppm-gallons, for use pursuant to § 80.1616.

S_a = Annual average sulfur level, calculated in accordance with the provisions of § 80.1603(c), in ppm.

V_a = Total volume of gasoline produced or imported during the averaging period, in gallons.

CRa = Credits generated during the annual averaging period per § 80.310, in ppm-gallons, for use pursuant to subpart H. This term is applicable only to small refiners and small volume refineries per paragraph (c)(1) of this section, and only prior to January 1, 2020. Beginning January 1, 2020, the value of this term is zero.

(ii) No credits shall be generated unless the value of SC_a is positive.

(iii) The value of SC_a shall be rounded to the nearest ppm-gallon in accordance with the rounding procedure specified in § 80.9.

(3) A refiner or importer may include any downstream added oxygenates included in its RFG or conventional gasoline volume under the provisions of §§ 80.69 and 80.101(d)(4), respectively, for the purpose of generating credits.

(4) Prior to January 1, 2020, credits generated under this paragraph (c) by small refiners and owners of small volume refineries per paragraph (c)(1) of this section must be designated as subject to the requirements of subpart H of this part. Any remaining credits must be designated as subject to the requirements of this subpart O.

§ 80.1616 Credit use and transfer.

(a) *Credit use.* (1) Credits may be used to meet the applicable annual average sulfur standards of § 80.1603(a)(1).

(2) Credits must have been generated pursuant to the requirements of § 80.1615.

(3) Only obligated parties under this subpart O may generate, use, transfer or own credits generated under this subpart O.

(4) *Credit life—Early Credits.* (i) Early credits generated under § 80.1615(b) are valid for use for the 2017 through 2019 compliance years. All early credits will expire and become invalid after February 29, 2020, when the 2019 annual compliance report is due.

(ii) Early credits may be used for compliance with the annual average sulfur standard of § 80.1603(a)(1) by refiners and importers.

(5) *Credit life—Standard Credits.* (i) Standard credits generated under § 80.1615(c) are valid for use for five years from the year in which they are generated. For example, standard credits generated in 2017 may be used for compliance through the 2022 compliance period (they would expire and become invalid after February 28, 2023, the 2022 annual compliance report due date).

(ii) Standard credits may be used for compliance with the annual average sulfur standard of § 80.1603(a)(1) by refiners and importers.

(6) A refiner or importer possessing credits must use all credits prior to falling into a compliance deficit.

(7) In no case may a credit be transferred more than twice before being used or terminated.

(b) *Credit transfers.* (1) Credits obtained from other obligated parties may be used to meet the annual average standards of this subpart O, if all of the following conditions are met:

(i) The credits are generated and reported according to the requirements of this subpart O.

(ii) The credits are used in compliance with the limitations regarding the appropriate periods for credit use pursuant to paragraph (a) of this section.

(iii) Any credit transfer takes place no later than February 28 following the calendar year averaging period when the credits are used.

(iv) The credit has not been transferred more than twice. The first transfer by the refiner or importer who generated the credit may only be made to a refiner or importer who intends to use the credit; if the transferee cannot use the credit, it may make the second, and final, transfer only to a refiner or importer who intends to use the credit.

(v) The credit transferor must apply any credits necessary to meet the transferor's applicable average standard before transferring credits to any other refiner or importer.

(vi) The credit transferor does not create a negative credit balance as a result of the credit transfer.

(vii) Each transferor must supply to the transferee records indicating all of the following:

(A) The years the credits were generated.

(B) The identity of the refiner or importer who generated the credits.

(C) The identity of the transferring party (if it is not the same party that generated the credits).

(2) In the case of credits that have been calculated or created improperly, or are otherwise determined to be invalid, all of the following provisions apply:

(i) Invalid credits cannot be used to achieve compliance with the transferee's averaging standard, regardless of the transferee's good faith belief that the credits were valid.

(ii) The refiner or importer who used the credits, and any transferor of the credits, must adjust their credit records and reports and sulfur calculations as necessary to reflect the proper credits.

(iii) Any properly created credits existing in the transferor's credit balance after correcting the credit balance, and after the transferor applies credits as needed to meet the average standard at the end of the compliance year, must first be applied to correct the invalid transfers before the transferor trades or banks the credits.

§ 80.1620 Small refiner definition.

(a) For the purposes of this subpart O, a gasoline small refiner is defined as any refiner who meets all of the following criteria and has been approved by EPA as a small refiner per § 80.1622:

(1) Produces gasoline at its refineries by processing crude oil through refinery processing units.

(2) Employed an average of no more than 1,500 people, based on the average number of employees for all pay periods for calendar year 2011 for all subsidiary companies, all parent companies, all subsidiaries of the parent companies, and all joint venture partners.

(3) Had a corporate-average crude oil capacity less than or equal to 155,000 barrels per calendar day (bpcd) for 2011.

(b) For the purposes of this section, the term ''refiner'' shall include foreign refiners.

(c) The number of employees and crude oil capacity under paragraph (a) of this section shall be determined as follows:

(1) The refiner shall include the employees and crude oil capacity of any subsidiary companies, any parent company and subsidiaries of the parent company in which the parent has 50 percent or greater ownership, and any joint venture partners.

(2) For any refiner owned by a governmental entity, the number of employees and total crude oil capacity as specified in paragraph (a) of this section shall include all employees and crude oil production of the government to which the governmental entity is a part.

(d) Notwithstanding the provisions of paragraphs (a) and (e)(1) of this section, a refiner that acquires or reactivates a refinery that was shut down or non-operational during calendar year 2011, may apply for small refiner status under this subpart O.

(e) The following are ineligible for small refiner provisions under this subpart:

(1) Refiners with refineries built or started up on or after January 1, 2011.

(2) Persons who exceed the employee or crude oil capacity criteria under this section on January 1, 2011, but who meet these criteria after that date, regardless of whether the reduction in employees or crude oil capacity is due to operational changes at the refinery or a company sale or reorganization.

(3) Importers.

(4) Refiners who produce gasoline other than by processing crude oil through refinery processing units.

(f)(1) A refiner approved as a small refiner under § 80.1622 who subsequently ceases production of gasoline from processing crude oil through refinery processing units, employs more than 1,500 people, or exceeds the 155,000 bpcd crude oil capacity limit after January 1, 2011 as a result of merger with or acquisition of or by another entity, is disqualified as a small refiner, except as provided for under paragraph (f)(4) of this section. If such disqualification occurs, the refiner shall notify EPA in writing no later than 20 days following the disqualifying event.

(2) Except as provided under paragraph (f)(3) of this section, any refiner whose status changes under this paragraph (f) shall meet the applicable standards of § 80.1603 within a period of up to 30 months from the disqualifying event for any of its refineries that were previously subject to the small refiner standards of § 80.1623.

(3) A refiner may apply to EPA for up to an additional six months to comply with the standards of § 80.1603 if more than 30 months would be required for the necessary engineering, permitting, construction, and start-up work to be completed. Such applications must include detailed technical information supporting the need for additional time. EPA will base a decision to approve additional time on information provided by the refiner and on other relevant information.

(4) Disqualification under this paragraph (f) of this section shall not apply in the case of a merger between two previously approved small refiners.

(5) If a refiner receives a delay per paragraphs (f)(2) and/or (f)(3) of this section, the refiner may not generate gasoline sulfur credits under this subpart O during that 30 or 36 month period.

(6) All written notifications to EPA should be submitted to the addresses listed in § 80.1622.

§ 80.1621 Small volume refinery definition.

(a) For the purposes of this subpart O, a gasoline small volume refinery is defined as any refinery that meets all of the following criteria, and has been approved by EPA as a small volume refinery per § 80.1622:

(1) Produces gasoline by processing crude oil through refinery processing units.

(2) The average aggregate daily crude oil throughput, including feedstocks derived from crude oil, for the calendar year 2011 (as determined by dividing the aggregate throughput for the calendar year by the number of days in the calendar year) does not exceed 75,000 barrels. Throughput means the total crude oil feedstock input into the refinery less volumes injected into the crude oil supply after refinery processing.

(b) The following are ineligible for the small volume refinery provisions under this subpart:

(1) Refineries built or started up on or after January 1, 2012.

(2) Persons who exceed the crude oil throughput under this section for calendar year 2011 but who meet these criteria after that date, regardless of whether the reduction in crude oil capacity is due to operational changes at the refinery or a company sale or reorganization.

(3) Importers.

(4) Refineries that produce gasoline other than by processing crude oil through refinery processing units.

§ 80.1622 Approval for small refiner and small volume refinery status.

(a) Applications for small refiner or small volume refinery status under this subpart must be submitted to EPA by March 31, 2014.

(b) To qualify for small refiner status under this subpart a refiner must submit an application to EPA containing all of the following information for the refiner and for all subsidiary companies, all parent companies, all subsidiaries of the parent companies, and all joint venture partners:

(1)(i) A listing of the name and address of all company locations for the period January 1, 2011 through December 31, 2011.

(ii) The average number of employees at each location, based on the number of employees for each pay period for the period January 1, 2011 through December 31, 2011.

(iii) The type of business activities carried out at each location.

(iv) For joint ventures, the total number of employees includes the combined employee count of all corporate entities in the venture.

(v) For government-owned refiners, the total employee count includes all government employees.

(2)(i) The total corporate crude oil capacity of each refinery as reported to the Energy Information Administration (EIA) of the U.S. Department of Energy (DOE), for the period January 1, 2011 through December 31, 2011. The information submitted to EIA is presumed to be correct. In cases where a company disagrees with this information, the company may petition EPA with appropriate data to correct the record when the company submits its application.

(ii) Foreign small refiners applying for approval under this section must send the total corporate crude oil capacity of each refinery for the period January 1, 2011 through December 31, 2011, to one of the addresses listed in paragraph (g) of this section.

(3) The application must be signed by the president, chief operating or chief executive officer of the company, or his/her designee, stating that the information is true to the best of his/her knowledge, and that the company owned the refinery as of December 31, 2011.

(4) Name, address, phone number, facsimile number, and email address of a corporate contact person.

(c) To qualify for small volume refinery status under this subpart, a refiner must submit an application to EPA containing all of the following information for the refinery, or refineries, for which the refiner is applying for small volume refinery status:

(1) A listing of the name and address of each small volume refinery owned by the company.

(2)(i) The total crude throughput of each small volume refinery, defined as the total crude oil feedstock input into the refinery less the volumes injected into the crude oil supply after refinery processing, as reported to EIA, for the period January 1, 2011 through December 31, 2011. The information submitted to EIA is presumed to be correct. In cases where a company disagrees with this information, the company may petition EPA with appropriate data to correct the record when the company submits its application.

(ii) Foreign refiners applying for small volume refinery approval under this section must send the total crude throughput of each small volume refinery, defined as the total crude oil feedstock input into the refinery less the volumes injected into the crude oil supply after refinery processing of each refinery for the period January 1, 2011 through December 31, 2011, to one of the addresses listed in paragraph (g) of this section.

(3) The application must be signed by the president, chief operating or chief executive officer of the company, or his/her designee, stating that the information is true to the best of his/her knowledge, and that the company owned the refinery as of December 31, 2011.

(4) Name, address, phone number, facsimile number, and email address of a corporate contact person.

(d) For foreign refiners, the small refiner or small volume refinery status application must contain all of the elements required in paragraph (b) or (c) of this section, as applicable, must demonstrate compliance with § 80.1620, and must be submitted by March 31, 2014 to one of the addresses listed in paragraph (g) of this section.

(e) A refiner who qualifies as a small refiner or small volume refinery under this subpart and subsequently fails to meet all of the qualifying criteria as set out in §§ 80.1620 and 80.1621 will be disqualified pursuant to § 80.1620(f) or § 80.1621(d).

(1) In the event such disqualification occurs, the refiner shall notify EPA in writing no later than 20 days following the disqualifying event.

(2) Disqualification under this paragraph (e) shall not apply in the case of a merger between two approved small refiners.

(3) Any refiner that acquires a refinery from another refiner with approved small refiner or small volume refinery status under this subpart shall notify EPA in writing no later than 20 days following the acquisition.

(f) If EPA finds that a refiner provided false or inaccurate information in its small refiner status or small volume refinery status application under this subpart, the refiner's small refiner or small volume refinery status will be void as of the effective date of this subpart.

(g) Small refiner and small volume refinery status applications, and any other correspondence required by this section, § 80.1620, and/or § 80.1621 shall be sent to one of the following addresses:

(1) *For U.S. Mail:* U.S. EPA—Attn: Tier 3 Program (Small Refiner/Small Volume Refinery), 6406J, 1200 Pennsylvania Avenue NW., Washington, DC 20460.

(2) *For overnight or courier services:* U.S. EPA, Attn: Tier 3 Program (Small Refiner/Small Volume Refinery), 6406J, 1310 L Street NW., 6th floor, Washington, DC 20005.

§§–80.1623 80.1624 [Reserved]

§ 80.1625 Hardship provisions.

EPA may, at its discretion, grant a refiner of gasoline that processes crude oil through refinery processing units, for one or more of its refineries, temporary relief from some or all of the provisions of this subpart.

(a) *Extreme hardship circumstances.* (1) EPA may, at its discretion, grant a refiner of gasoline that processes crude oil through refinery processing units, for one or more of its refineries, temporary relief from some or all of the provisions of this subpart. EPA may grant such relief provided that the refiner demonstrates all of the following:

(i) Unusual circumstances exist that impose extreme hardship and significantly affect the refiner's ability to comply by the applicable date.

(ii) It has made best efforts to comply with the requirements of this subpart.

(2) The application must specify the factors that demonstrate a significant economic hardship and must provide a detailed discussion regarding the inability of the refinery to produce gasoline meeting the requirements of § 80.1603. Such an application must include, at a minimum, all of the following information:

(i) Documentation of efforts made to obtain necessary financing, including all the following:

(A) Copies of loan applications for the necessary financing of the construction of appropriate sulfur reduction technology and other equipment procurements or improvements.

(B) If financing has been disapproved or is otherwise unsuccessful, documents supporting the basis for that disapproval

and evidence of efforts to pursue other means of financing.

(ii) A detailed analysis of the reasons the refinery is unable to produce gasoline meeting the standards of this subpart O in 2017, including costs, specification of equipment still needed, potential equipment suppliers, and efforts already completed to obtain the necessary equipment.

(iii) If unavailability of equipment is part of the reason for the inability to comply, a discussion of other options considered, and the reasons these other options are not feasible.

(iv) If relevant, a demonstration that a needed or lower cost technology is immediately unavailable, but will be available in the near future, and full information regarding when and from what sources it will be available.

(v) Schematic drawings of the refinery configuration as of January 1, 2011, and as of the date of the hardship extension application, and any planned future additions or changes.

(vi) If relevant, a demonstration that a temporary unavailability exists of engineering or construction resources necessary for design or installation of the needed equipment.

(vii) A detailed analysis of the reasons the refinery is unable to use credits to meet the gasoline standards of this subpart O, including all avenues pursued to generate and/or procure credits, their cost, and ability to finance them.

(viii) A discussion of any sulfur reductions that can be achieved from current levels.

(ix) The date the refiner anticipates compliance with the standards in § 80.1603 can be achieved at its refinery.

(x) An analysis of the economic impact of compliance on the refiner's business (including financial statements from the last 5 years, or for any time period up to 10 years, at EPA's request).

(xi) Any other information regarding other strategies considered, including strategies or components of strategies that do not involve installation of equipment, and why meeting the standards in § 80.1603 beginning in 2017 (or 2020 for approved small refiners and small volume refineries) is infeasible.

(3) Hardship applications under this paragraph (a) must be submitted to EPA by March 31, 2014 to one of the addresses listed in paragraph (d) of this section.

(b) *Extreme unforeseen circumstances hardship.* (1) In appropriate extreme, unusual, and unforeseen circumstances (for example, natural disaster or refinery fire) which are clearly outside the control of the refiner or importer and which could not have been avoided by the exercise of prudence, diligence, and due care, EPA may permit a refiner or importer, for a brief period, to distribute gasoline which does not meet the requirements of this subpart for all of the following reasons:

(i) It is in the public interest to do so (e.g., distribution of the nonconforming gasoline is necessary to meet projected shortfalls which cannot otherwise be compensated for).

(ii) The refiner or importer exercised prudent planning and was not able to avoid the violation and has taken all reasonable steps to minimize the extent of the nonconformity.

(iii) The refiner or importer can show how the requirements for making compliant gasoline, and/or purchasing credits to partially or completely offset the nonconformity, will be expeditiously achieved.

(iv) The refiner or importer agrees to make up any air quality detriment associated with the nonconforming gasoline, where practicable.

(v) The refiner or importer pays to the U.S. Treasury an amount equal to the economic benefit of the nonconformity minus the amount expended pursuant to paragraph (b)(1)(iv) of this section, in making up the air quality detriment.

(2) The hardship application must meet all other applicable requirements of this section, except paragraph (a) of this section.

(c) The hardship extension application must contain a letter signed by the president or the chief operating officer or chief executive officer of the company, or his/her designee, stating that the information contained in the application is true to the best of his/her knowledge.

(d) Hardship applications under this section must be submitted in writing to one of the following addresses:

(1) *For U.S. Mail:* U.S. EPA—Attn: Tier 3 Program (Hardship Application), 6406J, 1200 Pennsylvania Avenue NW., Washington, DC 20460.

(2) *For overnight or courier services:* U.S. EPA, Attn: Tier 3 Program (Hardship Application), 6406J, 1310 L Street NW., 6th floor, Washington, DC 20005.

§ 80.1630 Sampling and testing requirements for refiners and importers.

(a) *Sample and test each batch of gasoline.* (1) Refiners and importers shall collect a representative sample from each batch of gasoline produced or imported and test each sample to determine its sulfur content for compliance with requirements under this subpart prior to the gasoline leaving the refinery or import facility, using the sampling and testing methods provided in this section or §§ 80.8 (sampling) and 80.47 (testing).

(2) Except as provided in paragraph (a)(3) of this section, the requirements of this section apply beginning January 1, 2017.

(3)(i) Beginning January 1, 2017, any refiner who produces gasoline using computer-controlled in-line blending equipment is exempt from the requirement of paragraph (a)(1) of this section to obtain the test results required under paragraph (a)(1) of this section prior to the gasoline leaving the refinery, provided that the refiner obtains an exemption from this requirement from EPA. To obtain such exemption, the refiner must:

(A) Have been granted an in-line blending exemption under § 80.65(f)(4); or

(B) If the refiner has not been granted an exemption under § 80.65(f)(4), submit to EPA all of the information required under § 80.65(f)(4)(i)(A). A letter signed by the president, chief operating officer or chief executive officer of the company, or his/her designee, stating that the information contained in the submission is true to the best of his/her belief must accompany any submission under this paragraph (a)(3)(i)(B).

(ii) Refiners who seek an exemption under paragraph (a)(3)(i) of this section must comply with any EPA request for additional information or any other requirements that EPA includes as part of the exemption.

(iii) Within 60 days of EPA's receipt of a submission under paragraph (a)(3)(i)(B) of this section, EPA will notify the refiner if the exemption is not approved or of any deficiencies in the refiner's submission, or if any additional information is required or other requirements are included in the exemption pursuant to paragraph (a)(3)(ii) of this section. In the absence of such notification from EPA, the effective date of an exemption under paragraph (a)(3)(i) of this section for refiners who do not hold an exemption under § 80.65(f)(4) is 60 days from EPA's receipt of the refiner's submission under paragraph (a)(3)(i)(B) of this section.

(iv) EPA reserves the right to modify the requirements of an exemption under paragraph (a)(3)(i) of this section, in whole or in part, at any time, if EPA determines that the refiner's operation does not effectively or adequately control, monitor or document the sulfur content of the refinery's gasoline production, or if EPA determines that any other circumstances exist which merit modification of the requirements

of an exemption, such as advancements in the state of the art for in-line blending measurement which allow for additional control or more accurate monitoring or documentation of sulfur content. If EPA finds that a refiner provided false or inaccurate information in any submission required for an exemption under this section, upon notification from EPA, the refiner's exemption will be void *ab initio.*

(b) *Sampling methods.* For purposes of paragraph (a) of this section, refiners and importers shall sample each batch of gasoline by using one of the methods specified in § 80.8.

(c) *Test method for measuring sulfur content of gasoline.* (1) For purposes of paragraph (a) of this section, refiners and importers shall use the method provided in § 80.47, as applicable, to measure the sulfur content of gasoline they produce or import.

(2) Sulfur content shall be reported to the nearest ppm.

§ 80.1631 Sample retention requirements.

(a) *Sample retention requirements.* Beginning January 1, 2017, or January 1 of the first year credits are generated under § 80.1615, whichever is earlier, any refiner or importer shall do all of the following:

(1) Collect a representative portion of each sample analyzed under § 80.1630, of at least 330 milliliters in volume.

(2) Retain sample portions for the most recent 20 samples collected, or for each sample collected during the most recent 21 day period, whichever is greater, not to exceed 90 days for any given sample.

(3) Comply with the gasoline sample handling and storage procedures under § 80.1630 for each sample portion retained.

(4) Comply with any request by EPA to:

(i) Provide a retained sample portion to the Administrator's authorized representative; and

(ii) Ship a retained sample portion to EPA, within 2 working days of the date of the request, by an overnight shipping service or comparable means, to the address and following procedures specified by EPA, and accompanied with the sulfur test result for the sample determined under § 80.1630.

(b) *Sample retention requirement for samples subject to independent analysis requirements.* (1) Any refiner or importer who meets the independent analysis requirements under § 80.65(f) for any batch of reformulated gasoline or RBOB will have met the requirements of paragraph (a) of this section, provided the independent laboratory meets the requirements of paragraph (a) of this section for the gasoline batch; except that the retained RBOB sample for purposes of this subpart O must be a sample of the RBOB prior to hand blending with oxygenate.

(2) For samples retained by an independent laboratory under this paragraph (b), the test results required to be submitted under paragraph (a) of this section shall be the test results determined under § 80.65(e).

(c) *Sampling compliance certification.* Any refiner or importer shall include with each annual report filed under § 80.1652, the following statement, which must accurately reflect the facts and must be signed and dated by the same person who signs the annual report:

I certify that I have made inquiries that are sufficient to give me knowledge of the procedures to collect and store gasoline samples, and I further certify that the procedures meet the requirements of the ASTM procedures required under 40 CFR 80.1630.

(d) Prior to January 1, 2017, for purposes of complying with the requirements of this section, refiners who analyze composited samples under § 80.1630 must retain portions of the composited samples. Portions of samples of each batch comprising the composited samples are not required to be retained.

(e) For purposes of complying with the requirements of this section for RBOB, a sample of each RBOB batch produced must be retained.

§ 80.1640 Standards and requirements that apply to refiners producing gasoline by blending blendstocks into previously certified gasoline (PCG).

(a) Any refiner who produces gasoline by blending blendstock into PCG, as defined at § 80.2(d), must meet the requirements of § 80.1630 to sample and test every batch of gasoline as follows:

(1) Exclude the PCG for purposes of demonstrating compliance with the sulfur standards of this subpart O.

(2) To accomplish the exclusion required in paragraph (a)(5) of this section, the refiner must determine the volume and sulfur content of the PCG used at the refinery and the volume of and sulfur content of the gasoline produced at the refinery, and use the compliance calculation procedures in paragraphs (a)(1)(iii) and (iv) of this section.

(3) For each batch of PCG that is used to produce gasoline the refiner must include the volume and sulfur content of the PCG as a negative volume and a positive sulfur content in the refiner's compliance calculations in accord with the requirements at § 80.1603.

(4) For each batch of gasoline produced at the refinery using PCG and blendstock, the refiner must determine the volume and sulfur content of the combined product and include each batch of combined product for purposes of sulfur compliance in the refinery's compliance calculations at § 80.1603 without regard to the presence of previously certified gasoline in the batch.

(5) The refiner must use any PCG that it includes as a negative batch in its compliance calculations pursuant to § 80.1603 as a component in gasoline production during the annual averaging period in which the PCG was included as a negative batch in the refiner's compliance calculations.

(6) The refiner must also comply with § 80.65(i) when producing RBOB or RFG and § 80.101(g)(9) when producing conventional gasoline or CBOB.

(7) Any negative annual average sulfur value shall be reported as zero and not as a negative result.

(b) In the alternative, a refiner may sample and test each batch of blendstock when received at the refinery to determine the volume and sulfur content, and treat each blendstock receipt as a separate batch for purposes of compliance calculations for the annual average sulfur standard and for reporting. This alternative applies only if every batch of blendstock used at a refinery during an averaging period has a sulfur content that is equal to, or less than, the applicable per-gallon cap standard under § 80.1603.

(c) Refiners who blend only butane into PCG may meet the sampling and testing requirements of this subpart O for sulfur by using sulfur test results of the butane supplier, provided that the requirements of § 80.82 are met.

§ 80.1641 Alternative sulfur standards and requirements that apply to importers who transport gasoline by truck.

Importers who import gasoline into the United States by truck may comply with the following requirements instead of the requirements to sample and test every batch of gasoline under § 80.1630, and the annual sulfur average and per-gallon cap standards otherwise applicable to importers under § 80.1603:

(a) *Alternative standards.* The imported gasoline must comply with the standard in paragraph (a)(1) or (a)(2) of this section as follows:

(1) The annual average standard of 10 ppm and the per-gallon standard of 80 ppm as provided by § 80.1603; or

(2) A per-gallon standard of 10 ppm.

(b) *Terminal testing.* The importer may use test results for sulfur content testing conducted by the terminal

operator, for gasoline contained in the storage tank from which trucks used to transport gasoline into the United States are loaded, for purposes of demonstrating compliance with the standards in paragraph (a) of this section, provided all the following conditions are met:

(1) The sampling and testing shall be performed after each receipt of gasoline into the storage tank, or immediately before each transfer of gasoline to the importer's truck.

(2) The sampling and testing shall be performed using the methods specified in §§ 80.8 and 80.47, respectively.

(3) At the time of each transfer of gasoline to the importer's truck for import to the U.S., the importer must obtain a copy of the terminal test result that indicates the sulfur content of the truck load (or each compartment if fuel was loaded from different storage tanks).

(c) *Quality assurance program.* The importer must conduct a quality assurance program, as specified in this paragraph, for each truck loading terminal.

(1) Quality assurance samples must be obtained from the truck-loading terminal and tested by the importer, or by an independent laboratory, and the terminal operator must not know in advance when samples are to be collected.

(2) The sampling and testing must be performed using the methods specified in §§ 80.8 and 80.47, respectively.

(3) The quality assurance test results for sulfur must differ from the terminal test result by no more than the ASTM reproducibility of the terminal's test results, as determined by the following equation:

$$R = 105 \times ((S + 2)/10^4)^{0.4}$$

Where:

R = ASTM reproducibility.

S = Sulfur content based on the terminal's test result.

(4) The frequency of the quality assurance sampling and testing must be at least one sample for each fifty of an importer's trucks that are loaded at a terminal, or one sample per month, whichever is more frequent.

(d) *Party required to conduct quality assurance testing.* The quality assurance program under paragraph (c) of this section shall be conducted by the importer. In the alternative, this testing may be conducted by an independent laboratory that meets the criteria under § 80.65(f)(2)(iii), provided the importer receives, no later than 21 days after the sample was taken, copies of all results of tests conducted.

(e) *Assignment of batch numbers.* The importer must treat each truck load of imported gasoline as a separate batch for purposes of assigning batch numbers and maintaining records under § 80.1653, and reporting under § 80.1652.

(f) *EPA inspections of terminals.* EPA inspectors or auditors, and auditors conducting attest engagements under § 80.1667, must be given full and immediate access to the truck-loading terminal and any laboratory at which samples of gasoline collected at the terminal are analyzed, and must be allowed to conduct inspections, review records, collect gasoline samples, and perform audits. These inspections or audits may be either announced or unannounced.

(g) *Certified Sulfur-FRGAS.* This section does not apply to Certified Sulfur-FRGAS.

(h) *Reporting requirements.* Any importer who elects to comply with the alternative standards in paragraph (a) of this section shall comply with the following requirements:

(1) All importer recordkeeping and reporting requirements under §§ 80.1652 and 80.1653, except as provided in paragraph (h)(2) of this section.

(2) An importer who elects to comply with the alternative standards in paragraph (a)(2) of this section must certify in the annual report whether it is in compliance with the applicable per-gallon batch standard set forth in paragraph (a)(2) of this section, in lieu of providing the information required by § 80.1652 regarding annual average sulfur content and compliance with the average standard under § 80.1603.

(i) *Effect of noncompliance.* If any of the requirements of this section are not met, all gasoline imported by the truck importer during the time any requirements are not met is deemed in violation of the gasoline sulfur average and per-gallon cap standards in § 80.1603. Additionally, if any requirement is not met, EPA may notify the importer of the violation and, if the requirement is not fulfilled within 10 days of notification, the truck importer may not in the future use the sampling and testing provisions in this section in lieu of the provisions in § 80.1630.

§§ 80.1642–80.1649 [Reserved]

§ 80.1650 Registration.

The following registration requirements apply under this subpart:

(a) Registration with the EPA Administrator is required for any:

(1) Gasoline refiner or importer having any refinery or import facility subject to the gasoline sulfur standards under this subpart O.

(2) Oxygenate producer or importer having any oxygenate production facility or import facility subject to the oxygenate sulfur standards under § 80.1610 unless already registered under § 80.1450.

(3) Oxygenate blender who has any oxygenate blending facility that blends oxygenate into RBOB where the resulting gasoline is subject to the gasoline sulfur standards under this subpart O.

(b) *Registration dates.* (1) Any gasoline refiner or importer required to register shall do so by March 31, 2014, or at least thirty days in advance of the first date that such person will produce or import reformulated gasoline, conventional gasoline, RBOB, or CBOB, whichever is later.

(2) Any oxygenate producer or importer required to register shall do so by December 1, 2017, or at least thirty days in advance of the first date that such person will produce or import oxygenate, whichever is later.

(3) Any oxygenate blender required to register shall do so by March 31, 2014, or at least thirty days in advance of the first date that such person will blend oxygenate into RBOB, whichever is later.

(c) *Refiner registration.* (1) Registration shall be on forms prescribed by the Administrator, and shall include all the following information:

(i) The name, business address, contact name, email address, and telephone number of the refiner.

(ii) For each separate refinery, the facility name, physical location, contact name, email address, telephone number, and type of facility.

(iii) For each separate refinery:

(A) Whether records are kept on-site or off-site of the refinery.

(B) If records are kept off-site, the primary off-site storage facility name, physical location, contact name, email address, and telephone number.

(iv) For each separate refinery that produces reformulated gasoline and/or RBOB, the name, address, contact name, email address, and telephone number of the independent laboratory used to meet the independent analysis requirements of § 80.65(f).

(2) EPA will supply a company registration number to each refiner, and a facility registration number for each refinery that is identified. These registration numbers shall be used in all reports to the Administrator.

(3) *Updates to registration.* (i) Any refiner shall submit updated registration information to the Administrator within thirty days of any occasion when the registration information previously

supplied becomes incomplete or inaccurate; except that

(ii) EPA must be notified in writing of any change in designated independent laboratory under paragraph (a)(1)(iv) of this section at least thirty days in advance of such change.

(d) *Gasoline importer registration.* (1) Registration shall be on forms prescribed by the Administrator, and shall include all the following information:

(i) The name, business address, contact name, email address, and telephone number of the importer.

(ii) For each importer's operations in a single PADD:

(A) Whether records are kept on-site at the registered address or off-site.

(B) If records are kept off-site, the primary off-site storage facility name, physical location, contact name, email address, and telephone number.

(C) For importers that import reformulated gasoline and/or RBOB, the name, address, contact name and telephone number of the independent laboratory used to meet the independent analysis requirements of § 80.65(f).

(2) EPA will supply a company registration number to each importer. This registration number shall be used in all reports to the Administrator.

(3) *Updates to registration.* (i) Any importer shall submit updated registration information to the Administrator within thirty days of any occasion when the registration information previously supplied becomes incomplete or inaccurate; except that

(ii) EPA must be notified in writing of any change in designated independent laboratory under paragraph (d)(1)(ii)(C) of this section at least thirty days in advance of such change.

(e) *Oxygenate producer registration.* (1) Registration shall be on forms prescribed by the Administrator, and shall include all the following information:

(i) The name, business address, contact name, email address, and telephone number of the oxygenate producer.

(ii) For each separate oxygenate production facility, the facility name, physical location, contact name, telephone number, and type of facility.

(iii) For each separate oxygenate production facility:

(A) Whether records are kept on-site or off-site of the refinery.

(B) If records are kept off-site, the primary off-site storage facility name, physical location, contact name, and telephone number.

(2) EPA will supply a company registration number to each oxygenate producer, and a facility registration number for each oxygenate production facility that is identified. These registration numbers or those provided under § 80.1450 shall be used in all reports to the Administrator.

(3) *Updates to registration.* Any oxygenate producer shall submit updated registration information to the Administrator within thirty days of any occasion when the registration information previously supplied becomes incomplete or inaccurate.

(f) *Oxygenate importer registration.* (1) Registration shall be on forms prescribed by the Administrator, and shall include all the following information:

(i) The name, business address, contact name, and email address, telephone number of the importer.

(ii) For each importer's operations in a single PADD:

(A) Whether records are kept on-site at the registered address or off-site.

(B) If records are kept off-site, the primary off-site storage facility name, physical location, contact name, email address, and telephone number.

(2) EPA will supply a company registration number to each importer. This registration number shall be used in all reports to the Administrator.

(g) *Oxygenate blender registration.* (1) Registration shall be on forms prescribed by the Administrator, and shall include all the following information:

(i) The name, business address, contact name, and email address, telephone number of the oxygenate blender.

(ii) For each separate oxygenate blending facility, the facility name, physical location, contact name, telephone number, and type of facility.

(iii) For each separate oxygenate blending facility:

(A) Whether records are kept on-site or off-site of the refinery.

(B) If records are kept off-site, the primary off-site storage facility name, physical location, contact name, email address, and telephone number.

(2) EPA will supply a company registration number to each oxygenate blender, and a facility registration number for each oxygenate blending facility that is identified. These registration numbers or those provided under § 80.1450 shall be used in all reports to the Administrator.

(3) *Updates to registration.* Any oxygenate producer shall submit updated registration information to the Administrator within thirty days of any occasion when the registration information previously supplied becomes incomplete or inaccurate.

§ 80.1651 Product transfer document requirements.

(a) On each occasion that any person transfers custody or title to any gasoline, RBOB, CBOB, or oxygenate other than when gasoline is sold or dispensed for use in motor vehicles at a retail outlet or wholesale purchaser-consumer facility, the transferor shall provide to the transferee documents which include all the following information:

(1) The name and address of the transferor.

(2) The name and address of the transferee.

(3) The volume of gasoline, RBOB, CBOB, or oxygenate which is being transferred.

(4) The location of the gasoline, RBOB, CBOB, or oxygenate at the time of the transfer.

(5) The date of the transfer.

(b) On each occasion when any person transfers custody or title to any gasoline for export or with an exemption under §§ 80.1654, 80.1655, 80.1656, and/or 80.1658, any of the following statements must be included on the product transfer document:

(1) For gasoline with a national security exemption under § 80.1655, ''This gasoline is for use in vehicles, engines, or equipment under an EPA-approved national security exemption only.''.

(2) For gasoline with a research, development, or testing exemption under § 80.1656, ''This gasoline is for research, development, or testing purposes only.''.

(3) For gasoline for use in American Samoa, Guam, and the Commonwealth of the Northern Mariana Islands under § 80.1658, ''This is gasoline for use only in Guam, American Samoa, or the Northern Mariana Islands.''.

(4) For gasoline for export purposes, ''This gasoline is for export only.''.

(5) For gasoline for racing purposes, ''This gasoline is for racing purposes only.''.

(6) For California gasoline, pursuant to § 80.1654, ''California gasoline''.

(c) On each occasion when any person transfers custody or title to any gasoline additive intended to be used at less than 1 volume percent, other than when gasoline is sold or dispensed for use in motor vehicles at a retail outlet or wholesale purchaser-consumer facility, the transferor shall provide to the transferee documents which include information on the maximum recommended treatment level.

§ 80.1652 Reporting requirements.

Beginning with the 2017 averaging period or the first year credits are generated under § 80.1615 (whichever is

earlier), and continuing for each averaging period thereafter, any refiner or importer, and any oxygenate producer or importer, shall submit to EPA annual reports that contain the information required in this section, and any other information as EPA may require.

(a) *Refiner and importer annual reports.* Any refiner, for each of its refineries, and any importer for the gasoline it imports, shall submit a report for each calendar year averaging period that includes all the following information:

(1) The EPA importer, or refiner and refinery facility registration numbers.

(2) The average standard under § 80.1603, reported to two decimal places.

(3) The total volume of gasoline produced or imported, reported to the nearest whole number.

(4) The annual average sulfur level of the gasoline produced or imported, reported to two decimal places.

(5) The annual average sulfur level after inclusion of any credits, reported to two decimal places.

(6) Separately provided information for credits, and separately by year of creation, as follows:

(i) The number of credits at the beginning of the averaging period, reported to the nearest whole number.

(ii) The number of credits generated, reported to the nearest whole number.

(iii) The number of credits used, reported to the nearest whole number.

(iv) If any credits were obtained from or transferred to other parties; and for each other party, its name and EPA refiner or importer registration number, and the number of credits obtained from or transferred to the other party.

(v) The number of credits that expired at the end of the averaging period, reported to the nearest whole number.

(vi) The number of credits that will carry over into the subsequent averaging period, reported to the nearest whole number.

(7) For each batch of gasoline produced or imported during the averaging period, all of the following:

(i) The batch number assigned under § 80.65(d)(3); except that if composite samples of conventional gasoline representing multiple batches produced subsequent to December 31, 2003, are tested under § 80.101(i)(2) for anti-dumping compliance purposes, for purposes of this subpart a separate batch number must be assigned to each batch using the batch numbering procedures under § 80.65(d)(3).

(ii) The date the batch was produced.

(iii) The volume of the batch, reported to the nearest whole number.

(iv) The sulfur content of the batch, reported to two decimal places, along with identification of the test method used to determine the sulfur content of the batch, as determined under § 80.1630.

(8) All values measured or calculated pursuant to the requirements of this paragraph (a) shall be in accordance with the rounding procedure specified in § 80.9.

(9) When submitting reports under this paragraph (a) from January 1, 2017 through December 31, 2019, any importer shall exclude Certified Sulfur-FRGAS.

(b) *Additional reporting requirements for importers.* From January 1, 2017 through December 31, 2019, importers shall report all of the following information for Sulfur-FRGAS imported during an annual averaging period:

(1) The EPA refiner and refinery registration numbers of each foreign refiner and refinery where the Certified Sulfur-FRGAS was produced.

(2) The total gallons of Certified Sulfur-FRGAS and Non-Certified Sulfur-FRGAS imported from each foreign refiner and refinery, reported to one decimal place.

(c) *Oxygenate producer reports.* On an annual basis, the producer of DFE or other oxygenate must submit a summary report to EPA which includes all of the following:

(1) The facility identification information provided pursuant to § 80.1650.

(2) The total volume of all batches of DFE and other oxygenate produced.

(3) An attestation that all of the batches of DFE and other oxygenate produced during the compliance period were in compliance with the requirements of this subpart.

(d) *Report submission.* Any annual report required under this section shall be:

(1) Signed and certified as meeting all of the applicable requirements of this subpart by the owner or a responsible corporate officer of the refiner or importer; and

(2) Submitted to EPA no later than the March 31 each year for the prior calendar year averaging period.

(e) *Attest reports.* Attest reports for refiner and importer attest engagements required under § 80.1667 shall be submitted to the Administrator by May 31 of each year for the prior calendar year averaging period.

§ 80.1653 Recordkeeping.

(a) *Records that must be kept.* Beginning January 1, 2017 or January 1 of the first year that credits are generated (whichever is earlier), any person who produces, imports, sells, offers for sale, dispenses, distributes, supplies, offers for supply, stores, or transports gasoline, shall keep records that contain all of the following information:

(1) The product transfer document information required under § 80.1651.

(2) All of the following information for any sampling and testing for sulfur content required under this subpart O:

(i) The location, date, time, and storage tank or truck identification for each sample collected.

(ii) The name and title of the person who collected the sample and the person who performed the test.

(iii) The results of the test as originally printed by the testing apparatus, or where no printed result is produced, the results as originally recorded by the person who performed the test.

(iv) Any record that contains a test result for the sample that is not identical to the result recorded under paragraph (a)(2)(iii) of this section.

(v) The test methodology used.

(b) *Additional records that refiners and importers must keep.* Beginning January 1, 2014, or January 1 of the first year credits are generated under § 80.1615, whichever is earlier, any refiner for each of its refineries and any importer for the gasoline it imports, shall keep records that include all of the following information:

(1) For each batch of gasoline produced or imported:

(i) The batch volume.

(ii) The batch number assigned under § 80.65(d)(3) and the appropriate designation under paragraph (b)(1)(iv) of this section; except that for composite samples of conventional gasoline representing multiple batches, that are tested under § 80.101(i)(2) for purposes of this subpart, a separate batch number must be assigned to each batch using the batch numbering procedures under § 80.65(d)(3).

(iii) The date of production or importation.

(iv) If appropriate, the designation of the batch as California gasoline under § 80.1654, exempt gasoline for national security purposes under § 80.1655, exempt gasoline for research and development under § 80.1656, or for export outside the United States.

(v) The test methodology used.

(2) Information regarding credits, separately kept according to the year of creation; and for credit generation or use starting in 2014. Information shall be kept separately for different types of credits generated under § 80.1615:

(i) The number of credits in the refiner's or importer's possession at the beginning of the averaging period.

(ii) The number of credits generated.

(iii) The number of credits used.

(iv) If any credits were obtained from or transferred to other parties, all the following for each other party:

(A) The party's name.

(B) The party's EPA refiner or importer registration number.

(C) The number of credits obtained from, or transferred to, the party.

(v) The number of credits that expired at the end of the averaging period.

(vi) The number of credits in the refiner's or importer's possession that will carry over into the subsequent averaging period.

(vii) Contracts or other commercial documents that establish each transfer of credits from the transferor to the transferee.

(3) The calculations used to determine compliance with the applicable sulfur average standards of § 80.1603 or § 80.1604.

(4) The calculations used to determine the number of credits generated under § 80.1615.

(5) A copy of all reports submitted to EPA under § 80.1652.

(6) In the case of parties who process transmix, records of any sampling and testing required under § 80.1607.

(c) *Additional records importers must keep.* Any importer shall keep records that identify and verify the source of each batch of certified Sulfur-FRGAS and non-certified Sulfur-FRGAS imported and demonstrate compliance with the requirements for importers under § 80.1666.

(d) *Records that producers of denatured fuel ethanol and other oxygenates must keep.*

(1) The date each batch was produced.

(2) The batch volume and an identification of the test methodology used.

(3) The test results on the sulfur content of each batch and the test methodology used.

(4) The volume percent denaturant used in each batch if the oxygenate is denatured fuel ethanol.

(5) The type and source of the denaturant used in each batch if the oxygenate is denatured fuel ethanol.

(e) *Records that parties that take custody of oxygenates must keep.* All parties that take custody of oxygenate from the oxygenate producer through to the oxygenate blender must keep a copy of the product transfer document for each batch of oxygenate.

(f) *Length of time records must be kept.* The records required under this subpart O shall be kept for five years from the date they were created; except in the following cases:

(1) *Transfers of credits.* Except as provided in paragraph (f)(2) of this section, records relating to credit transfers shall be kept by the transferor for five years from the date the credits are transferred; and shall be kept by the transferee for five years from the date the credits were transferred, used, or terminated, whichever is later.

(2) *Early credits.* (i) Where the party generating the credits does not transfer the credits, records must be kept for five years from the date of creation, use, or termination, whichever is later.

(ii) Where early credits are transferred, records relating to such credits shall be kept by the transferor for five years from the date the credits are transferred; and shall be kept by the transferee for five years from the date the credits were transferred, used, or terminated, whichever is later.

(g) *Make records available to EPA.* On request by EPA, the records required in this section shall be provided to the Administrator's authorized representative. For records that are electronically generated or maintained, the equipment and software necessary to read the records shall be made available; or, if requested by EPA, electronic records shall be converted to paper documents which shall be provided to the Administrator's authorized representative.

§ 80.1654 California gasoline requirements.

(a) *California gasoline exemption.* California gasoline that complies with all the requirements of this section is exempt from all other provisions of this subpart O.

(b) *Requirements for California gasoline.* (1) Each batch of California gasoline must be designated as such by its refiner or importer.

(2) Designated California gasoline must be kept segregated from gasoline that is not California gasoline, at all points in the distribution system.

(3) Designated California gasoline must ultimately be used in the State of California and not used elsewhere.

(4) For California gasoline produced outside the State of California, the transferors and transferees must meet the product transfer document requirements of paragraph (b)(5) of this section.

(5)(i) Any refiner that operates a refinery located outside the State of California at which California gasoline (as defined in § 80.1600) is produced must provide to any person to whom custody or title of such gasoline has transferred, and each transferee must provide to any subsequent transferee, documents which include all the following information:

(A) The name and address of the transferor.

(B) The name and address of the transferee.

(C) The volume of gasoline which is being transferred.

(D) The location of the gasoline at the time of the transfer.

(E) The date and time of the transfer.

(F) The identification of the gasoline as California gasoline.

(ii) Each refiner and transferee of California gasoline must maintain copies of the product transfer documents required to be provided by paragraph (b)(5)(i) of this section for a period of five years from the date of creation and shall deliver such documents to the Administrator or to the Administrator's authorized representative upon request.

(6) Gasoline that is ultimately used in any part of the United States outside of the State of California must comply with the standards and requirements of this subpart, regardless of any designation as California gasoline.

(c) *Use of California test methods and offsite sampling procedures.* In the case of any gasoline that is not California gasoline and that is either produced at a refinery located in the State of California or is imported from outside the United States into the State of California, the refiner or importer may, with regard to such gasoline:

(1) Use the sampling and testing methods approved in Title 13 of the California Code of Regulations instead of the sampling and testing methods required under § 80.1630; and

(2) Determine the sulfur content of gasoline at offsite tankage (which would otherwise be prohibited under § 80.65(e)(1)).

(i) Note that the requirements of § 80.65(e)(1), regarding when the properties of a batch of reformulated gasoline must be determined, specify that the properties of a batch of gasoline be determined prior to the gasoline leaving the refinery or import facility; however, under this section, a refiner of California gasoline may determine the properties of gasoline as specified under § 80.65(e)(1) at offsite tankage provided that:

(A) The samples are properly collected under the terms of a current and valid protocol agreement between the refiner and the California Air Resources Board with regard to sampling at the offsite tankage and consistent with the requirements prescribed in Title 13, California Code of Regulations, section 2250 et seq. (May 1, 2003); and

(B) The refiner provides a copy of the protocol agreement to EPA upon request.

(ii) [Reserved]

§ 80.1655 National security exemption.

(a) The standards of § 80.1603 do not apply to gasoline that is produced, imported, sold, offered for sale, supplied, offered for supply, stored, dispensed, or transported for use in any of the following:

(1) Tactical military vehicles, engines, or equipment having an EPA national security exemption from the gasoline emission standards under 40 CFR part 86.

(2) Tactical military vehicles, engines, or equipment that are not subject to a national security exemption from vehicle or engine emissions standards as described in paragraph (a)(1) of this section but, for national security purposes (for purposes of readiness for deployment oversees), need to be fueled on the same gasoline as the vehicles, engines, or equipment for which EPA has granted such a national security exemption.

(b) The exempt fuel must meet all the following conditions:

(1) It must be accompanied by product transfer documents as required under § 80.1651.

(2) It must be segregated from non-exempt gasoline at all points in the distribution system.

(3) It must be dispensed from a fuel pump stand, fueling truck, or tank that is labeled with the appropriate designation of the fuel.

(4) It may not be used in any vehicles, engines, or equipment other than those referred to in paragraph (a) of this section.

§ 80.1656 Exemptions for gasoline used for research, development, or testing purposes.

(a) *Written request for a research and development exemption.* Any person may receive an exemption from the provisions of this subpart for gasoline used for research, development, or testing (''R&D'') purposes by submitting the information listed in paragraph (c) of this section to EPA. Applications for R&D exemptions must be submitted to one of the addresses in paragraph (h) of this section.

(b) *Criteria for a research and development exemption.* For a research and development exemption to be granted, the person requesting an exemption must do all of the following:

(1) Demonstrate a purpose that constitutes an appropriate basis for exemption.

(2) Demonstrate that an exemption is necessary.

(3) Design a research and development program that is reasonable in scope.

(4) Have a degree of control consistent with the purpose of the program and EPA's monitoring requirements.

(c) *Information required to be submitted.* To demonstrate each of the elements in paragraph (b) of this section, the person requesting an exemption must include all of the following information:

(1) A concise statement of the purpose of the program demonstrating that the program has an appropriate research and development purpose.

(2) An explanation of why the stated purpose of the program cannot be achieved in a practicable manner without performing one or more of the prohibited acts under this subpart O.

(3) All of the following, to demonstrate the reasonableness of the scope of the program:

(i) An estimate of the program's beginning and ending dates.

(ii) An estimate of the maximum number of vehicles or engines involved in the program and the number of miles and engine hours that will be accumulated on each.

(iii) The sulfur content of the gasoline expected to be used in the program.

(iv) The quantity of gasoline which does not comply with the requirements of § 80.1603.

(v) The manner in which the information on vehicles and engines used in the program will be recorded and made available to the Administrator upon request.

(4) With regard to control, a demonstration that the program affords EPA a monitoring capability, including all the following:

(i) A description of the technical and operational aspects of the program.

(ii) The site(s) of the program (including facility name, street address, city, county, state, and zip code).

(iii) The manner in which information on the fuel used in the program (including quantity, fuel properties, name, address, telephone number and contact person of the supplier, and the date received from the supplier), will be recorded and made available to the Administrator upon request.

(iv) The manner in which the party will ensure that the research and development fuel will be segregated from gasoline meeting the standards of this subpart and how fuel pumps will be labeled to ensure proper use of the research and development fuel.

(v) The name, address, telephone number, and title of the person(s) in the organization requesting an exemption from whom further information on the application may be obtained.

(vi) The name, address, telephone number, and title of the person(s) in the organization requesting an exemption who is responsible for recording and making available the information specified in this paragraph (c), and the location where such information will be maintained.

(d) *Additional requirements.* (1) The product transfer documents associated with research and development gasoline must comply with requirements of § 80.1651(c).

(2) The research and development gasoline must be designated by the refiner or supplier, as applicable, as exempt research and development gasoline.

(3) The research and development gasoline must be kept segregated from non-exempt gasoline at all points in the distribution system.

(4) The research and development gasoline must not be sold, distributed, offered for sale or distribution, dispensed, supplied, offered for supply, transported to or from, or stored by a fuel retail outlet, or by a wholesale purchaser-consumer facility, unless the wholesale purchaser-consumer facility is associated with the research and development program that uses the gasoline.

(5) At the completion of the program, any emission control systems or elements of design which are damaged or rendered inoperative shall be replaced on vehicles remaining in service, or the responsible person will be liable for a violation of the Clean Air Act section 203(a)(3) (42 U.S.C. 7522 (a)(3)) unless sufficient evidence is supplied that the emission controls or elements of design were not damaged.

(e) *Memorandum of exemption.* The Administrator will grant an R&D exemption upon a demonstration that the requirements of this section have been met. The R&D exemption will be granted in the form of a memorandum of exemption signed by the applicant and the Administrator (or delegate), which may include such terms and conditions as the Administrator determines necessary to monitor the exemption and to carry out the purposes of this section, including restoration of emission control systems.

(1) The volume of fuel subject to the approval shall not exceed the estimated amount under paragraph (c)(3) of this section, unless EPA grants a greater amount in writing.

(2) Any exemption granted under this section will expire at the completion of the test program or three years from the date of approval, whichever occurs first, and may only be extended upon re-

application consistent will all requirements of this section.

(3) EPA may elect at any time to review the information contained in the request, and where appropriate may notify the responsible person of disapproval of the exemption.

(4) In granting an exemption the Administrator may include terms and conditions, including replacement of emission control devices or elements of design, that the Administrator determines are necessary for monitoring the exemption and for assuring that the purposes of this subpart are met.

(5) Any violation of a term or condition of the exemption, or of any requirement of this section, will cause the exemption to be void ab initio.

(6) If any information required under paragraph (c) of this section should change after approval of the exemption, the responsible person must notify EPA in writing immediately. Failure to do so may result in disapproval of the exemption or may make it void ab initio, and may make the party liable for a violation of this subpart O.

(f) *Effects of exemption.* Gasoline that is subject to a research and development exemption under this section is exempt from other provisions of this subpart O provided that the fuel is used in a manner that complies with the purpose of the program under paragraph (c) of this section and all other requirements of this section.

(g) *Notification of completion.* The party shall notify EPA in writing within 30 days after completion of the research and development program.

(h) *Submission.* Requests for research and development exemptions shall be sent to one of the following addresses:

(1) *For U.S. Mail:* U.S. EPA—Attn: Tier 3 Program (R&D Exemption Request), 6406J, 1200 Pennsylvania Avenue NW., Washington, DC 20460.

(2) *For overnight or courier services:* U.S. EPA, Attn: Tier 3 Program (R&D Exemption Request), 6406J, 1310 L Street NW., 6th floor, Washington, DC 20005.

§ 80.1657 [Reserved]

§ 80.1658 Requirements for gasoline for use in American Samoa, Guam, and the Commonwealth of the Northern Mariana Islands.

The gasoline sulfur standards of this subpart O do not apply to gasoline that is produced, imported, sold, offered for sale, supplied, offered for supply, stored, dispensed, or transported for use in the Territories of Guam, American Samoa or the Commonwealth of the Northern Mariana Islands, provided that such gasoline meets all of the following requirements:

(a) The gasoline is designated by the refiner or importer as high sulfur gasoline only for use in Guam, American Samoa, or the Commonwealth of the Northern Mariana Islands.

(b) The gasoline is used only in Guam, American Samoa, or the Commonwealth of the Northern Mariana Islands.

(c) The gasoline is accompanied by documentation that complies with the product transfer document requirements of § 80.1651(c)(3).

(d) The gasoline is segregated from non-exempt high sulfur gasoline at all points in the distribution system from the point the fuel is designated as gasoline only for use in Guam, American Samoa, or the Commonwealth of the Northern Mariana Islands, while the fuel is in the United States but outside these Territories.

§ 80.1659 [Reserved]

§ 80.1660 Prohibited acts.

No person shall:

(a) *Averaging violation.* Produce or import gasoline that does not comply with the applicable sulfur average standard under § 80.1603.

(b) *Cap standard violation.* Produce, import, sell, offer for sale, dispense, supply, offer for supply, store or transport gasoline or oxygenate (including any denaturant) that does not comply with the applicable sulfur cap standards under § 80.1603, § 80.1604, or § 80.1610.

(c) *Causing an averaging or cap standard violation.* Cause another person to commit an act in violation of paragraph (a), (b), (d), (e), (f), (g), or (h) of this section.

(d) *Causing violating gasoline to be in the distribution system.* Cause gasoline to be in the distribution system which does not comply with an applicable sulfur cap standard under § 80.1603, § 80.1604, or § 80.1610.

(e) *Oxygenate violation.* Starting March 1, 2017, blend into gasoline, RBOB, or CBOB any oxygenate, including but not limited to denatured ethanol, that has a sulfur content higher than 10 ppm.

(f) *Additive blender violation.* Unless acting in the capacity of a gasoline refiner or importer under § 80.1613, introduce an additive other than an oxygenate compound into gasoline, CBOB, or RBOB which contributes more than 3 ppm to the sulfur content of the finished gasoline, CBOB, or RBOB.

(g) *Additive manufacturer violation.* Cause or contribute to the introduction into commerce of a gasoline additive intended to be used at less than 1 volume percent which does not comply with the requirements of § 80.1613.

(h) *Credit violation.* Generate, transfer, or use invalid credits or improperly transfer or use credits.

(i) *Failure to meet a requirement.* Fail to meet a requirement that applies to that person under this subpart.

§ 80.1661 What evidence may be used to determine compliance with the prohibitions and requirements of this subpart and liability for violations of this subpart?

(a) Compliance with the sulfur standards of this subpart O shall be determined based on the sulfur level, measured using the methodologies specified in §§ 80.47 and 80.1630. Any evidence or information, including the exclusive use of such evidence or information, may be used to establish the sulfur level of gasoline if the evidence or information is relevant to whether the sulfur level would have been in compliance with the standards if the appropriate sampling and testing methodology had been correctly performed. Such evidence may be obtained from any source or location and may include, but is not limited to, test results using methods other than those specified in §§ 80.47 and 80.1630, business records, and commercial documents.

(b) Determinations of compliance with the requirements of this subpart other than the sulfur standards, and determinations of liability for any violation of this subpart, may be based on information obtained from any source or location. Such information may include, but is not limited to, business records and commercial documents.

§ 80.1662 Liability for violations under subpart O.

The following persons are liable for violations under this subpart:

(a) *Persons liable for violations of prohibited acts*—(1) *Averaging violation.* Any refiner or importer who violates § 80.1660(a) is liable for the violation.

(2) *Causing an averaging violation.* Any refiner, importer, distributor, reseller, carrier, retailer, wholesale purchaser-consumer, or oxygenate blender who causes another party to violate § 80.1660(a), is liable for a violation of § 80.1660(c).

(3) *Cap standard violation.* Any refiner, importer, distributor, reseller, carrier, retailer, wholesale purchaser-consumer, oxygenate producer, oxygenate blender, additive manufacturer, or additive blender who owned, leased, operated, controlled or supervised a facility where a violation of § 80.1660(b) occurred, is deemed in violation of § 80.1660(b).

(4) *Causing a cap standard violation.* Any refiner, importer, distributor, reseller, carrier, retailer, wholesale purchaser-consumer, oxygenate producer, oxygenate blender, additive manufacturer, or additive blender who produced, imported, sold, offered for sale, dispensed, supplied, offered for supply, stored, transported, or caused the transportation or storage of gasoline that violates § 80.1660(b), is deemed in violation of § 80.1660(c).

(5) *Branded refiner/importer liability.* Any refiner or importer whose corporate, trade, or brand name, or whose marketing subsidiary's corporate, trade, or brand name appeared at a facility where a violation of § 80.1660(b) occurred, is deemed in violation of § 80.1660(b).

(6) *Causing violating gasoline to be in the distribution system.* Any refiner, importer, distributor, reseller, carrier, oxygenate producer, oxygenate blender, additive manufacturer, or additive blender who owned, leased, operated, controlled or supervised a facility from which gasoline was released into the distribution system which does not comply with an applicable sulfur cap standard or a sulfur averaging standard is deemed in violation of § 80.1660(d).

(7) *Carrier causation.* In order for a carrier to be liable under paragraph (a)(2), (a)(3), (a)(4), or (a)(6) of this section, EPA must demonstrate, by reasonably specific showing by direct or circumstantial evidence, that the carrier caused the violation.

(8) *Oxygenate blender violation.* Any oxygenate blender who violates § 80.1660(e) is liable for the violation.

(9) *Additive manufacturer violation.* Any additive manufacturer who violates § 80.1660(g) is deemed liable for the violation.

(10) *Additive blender violation.* Any additive blender who violates § 80.1660(f) is deemed liable for the violation.

(11) *Credit violation.* Any refiner or importer who violates § 80.1660(h) is liable for the violation.

(12) *Parent corporation liability.* Any parent corporation is liable for any violations of this subpart that are committed by any of its wholly-owned subsidiaries.

(13) *Joint venture and joint owner liability.* Each partner to a joint venture, or each owner of a facility owned by two or more owners, is jointly and severally liable for any violation of this subpart that occurs at the joint venture facility or facility owned by the joint owners, or is committed by the joint venture operation or any of the joint owners of the facility.

(b) *Persons liable for failure to meet other provisions of this subpart.* Any person who:

(1) Fails to comply with a provision of this subpart not addressed in paragraph (a) of this section is liable for a violation of that provision.

(2) Causes another person to fail to meet a requirement of this subpart not addressed in paragraph (a) of this section, is liable for causing a violation of that provision.

§ 80.1663 Defenses for a violation of a prohibited act under subpart O.

(a) Any person deemed liable for a violation of a prohibition under § 80.1662(a)(3) through (a)(10), will not be deemed in violation if the person demonstrates all the following:

(1) The violation was not caused by the person or the person's employee or agent.

(2) In cases where product transfer document requirements under this subpart apply, the product transfer documents account for the fuel found to be in violation and indicate that the violating product was in compliance with the applicable requirements while in that person's control; and

(3) The person conducted a quality assurance sampling and testing program, as described in paragraph (d) of this section. A carrier may rely on the quality assurance program carried out by another party, including the party who owns the gasoline in question, provided that the quality assurance program is carried out properly. Retailers and wholesale purchaser-consumers are not required to conduct sampling and testing of gasoline as part of their quality assurance programs.

(b) In the case of a violation found at a facility operating under the corporate, trade or brand name of a refiner or importer, or a refiner's or importer's marketing subsidiary, the refiner or importer must show, in addition to the defense elements required under paragraphs (a)(1)through (a)(3) of this section, that the violation was caused by any of the following:

(1) An act in violation of law (other than the Clean Air Act or this part 80), or an act of sabotage or vandalism.

(2) The action of any refiner, importer, retailer, distributor, reseller, oxygenate blender, carrier, retailer or wholesale purchaser-consumer in violation of a contractual agreement between the branded refiner or importer and the person designed to prevent such action, and despite periodic sampling and testing by the branded refiner or importer to ensure compliance with such contractual obligation.

(3) The action of any carrier or other distributor not subject to a contract with the refiner or importer, but engaged for transportation of gasoline, despite specifications or inspections of procedures and equipment which are reasonably calculated to prevent such action.

(c) Under paragraph (a) of this section, for any person to show that a violation was not caused by that person, or under paragraph (b) of this section to show that a violation was caused by any of the specified actions, the person must demonstrate by reasonably specific showings, by direct or circumstantial evidence, that the violation was caused or must have been caused by another person and that the person asserting the defense did not contribute to that other person's causation.

(d) To demonstrate an acceptable quality assurance and testing program under paragraph (a)(2) of this section, a person must present evidence of all of the following:

(1) A periodic sampling and testing program to ensure the gasoline the person sold, dispensed, supplied, stored, or transported, meets the applicable sulfur standard.

(2) On each occasion when gasoline is found not in compliance with the applicable sulfur standard:

(i) The person immediately ceases selling, offering for sale, dispensing, supplying, offering for supply, storing or transporting the non-complying product; and

(ii) The person promptly remedies the violation and the factors that caused the violation (for example, by removing the non-complying product from the distribution system until the applicable standard is achieved and taking steps to prevent future violations of a similar nature from occurring).

(3) For any carrier who transports gasoline in a tank truck, the quality assurance program required under this paragraph (d) need not include periodic sampling and testing of gasoline in the tank truck, but in lieu of such tank truck sampling and testing, the carrier shall demonstrate evidence of an oversight program for monitoring compliance with the requirements of this subpart relating to the transport or storage of gasoline by tank truck, such as appropriate guidance to drivers regarding compliance with the applicable sulfur standard and product transfer document requirements, and the periodic review of records received in the ordinary course of business concerning gasoline quality and delivery.

§ 80.1664 [Reserved]

§ 80.1665 Penalties.

(a) Any person liable for a violation under § 80.1662 is subject to civil penalties as specified in section 205 of the Clean Air Act (42 U.S.C. 7524) for every day of each such violation and the amount of economic benefit or savings resulting from each violation.

(b) Any person liable under § 80.1662(a)(1) or (a)(2) for a violation of the applicable sulfur averaging standard or causing another party to violate that standard during any averaging period, is subject to a separate day of violation for each and every day in the averaging period. Any person liable under § 80.1662(a)(11) or (b) for a failure to fulfill any requirement for credit generation, transfer, use, banking, or deficit correction, is subject to a separate day of violation for each and every day in the averaging period in which invalid credits are generated or used.

(c)(1) Any person liable under § 80.1662(a)(3) through (a)(10) for a violation of an applicable sulfur per gallon cap standard under this subpart O or of causing another party to violate a cap standard, is subject to a separate day of violation for each and every day the non-complying gasoline remains any place in the gasoline distribution system.

(2) Any person liable under § 80.1662(a)(6) for causing gasoline to be in the distribution system which does not comply with an applicable sulfur cap standard, or a sulfur averaging standard, is subject to a separate day of violation for each and every day that the non-complying gasoline remains any place in the gasoline distribution system.

(3) For purposes of this paragraph (c), the length of time the gasoline in question remained in the gasoline distribution system is deemed to be twenty-five days, unless a person subject to liability or EPA demonstrates by reasonably specific showings, by direct or circumstantial evidence, that the non-complying gasoline remained in the gasoline distribution system for fewer than or more than twenty-five days.

(d) Any person liable under § 80.1662(b) for failure to meet, or causing a failure to meet, a provision of this subpart is liable for a separate day of violation for each and every day such provision remains unfulfilled.

§ 80.1666 Additional requirements for foreign small refiners and foreign small volume refineries.

The provisions of this section apply to certain foreign refiners and importers during the period January 1, 2017 through December 31, 2019. After December 31, 2019, foreign refiners are not subject to compliance requirements under subpart H of this part, or this subpart O; instead, the importer of any foreign-produced gasoline shall be responsible for compliance with the standards and requirements of this subpart O that relate to importers.

(a) *Definitions*—(1) *Foreign small refiner* is a foreign refiner that meets the definition of a small refiner under § 80.1620.

(2) *Foreign small volume refinery* is a foreign refinery that meets the definition of a small volume refinery under § 80.1621.

(3) *Sulfur-FRGAS,* for this subpart, means gasoline produced from January 1, 2017 through December 31, 2019, at a foreign refinery of a refiner that has been approved as a small refiner or a small volume refinery under § 80.1622, and that is imported into the United States.

(4) *Non-Sulfur-FRGAS* means gasoline that is produced at a foreign refinery that has not been approved as a small refiner refinery or small volume refinery under § 80.1622, gasoline produced at a foreign refinery of an approved small refiner or at an approved small volume refinery under § 80.1622 that is not imported into the United States, and gasoline produced at a foreign refinery that is approved during a year when the foreign refiner has opted to not participate in the Sulfur-FRGAS program under paragraph (c)(3) of this section.

(5) *Certified Sulfur-FRGAS* means Sulfur-FRGAS the foreign refiner intends to include in the foreign refinery's sulfur compliance calculations under §§ 80.195 and 80.205 and does include in these compliance calculations when reported to EPA.

(6) *Non-Certified Sulfur-FRGAS* means Sulfur-FRGAS that is not Certified Sulfur-FRGAS.

(b) *Petition for approval of small refiner or small volume refinery status.* To be approved for small refiner status or small volume refinery status a foreign refiner must submit a petition for approval as provided under § 80.1622 and this section. If small refiner status or small volume refinery status is approved, the foreign refiner may produce gasoline for export to the United States, during the period starting January 1, 2017 and ending December 31, 2019, that is subject to the sulfur content standards of subpart H of this part at § 80.195 that were applicable to refiners from 2006 through 2016. A foreign refiner is not eligible to generate sulfur credits under subpart H of this part or this subpart O, as this occurs through the importer.

(c) *General requirements for foreign refiners approved as small refiners or small volume refinery status.* A foreign refiner of a refinery that has been approved as a small refiner refinery or a small volume refinery must designate all gasoline produced at the foreign refinery that is exported to the United States as either Certified Sulfur-FRGAS or as Non-Certified Sulfur-FRGAS, except as provided in paragraph (c)(3) of this section.

(1) In the case of Certified Sulfur-FRGAS, the foreign refiner must meet the sulfur standards of subpart H of this part as described in paragraph (b) of this section and the requirements of this section.

(2) In the case of Non-Certified Sulfur-FRGAS, the foreign refiner shall meet all the following provisions, except the foreign refiner shall substitute the name Non-Certified Sulfur-FRGAS for the names ''reformulated gasoline'' or ''RBOB'' wherever they appear in the following provisions:

(i) The designation requirements in this section.

(ii) The recordkeeping requirements under § 80.1653.

(iii) The reporting requirements in § 80.1652 and this section.

(iv) The product transfer document requirements in § 80.1651 and this section.

(v) The prohibitions in § 80.1660 and this section.

(vi) The independent audit requirements under § 80.415 and paragraph (h) of this section; and the attest engagement provisions of §§ 80.125 through 80.127, § 80.128(a), (b), (c), and (g) through (i), and § 80.130.

(3)(i) Any foreign refiner that has been approved as a small refiner or whose refinery has been approved as a small volume refinery under this subpart O may elect to classify no gasoline imported into the United States as Sulfur-FRGAS, provided the foreign refiner notifies EPA of the election no later than November 1 of the prior calendar year.

(ii) An election under paragraph (c)(3)(i) of this section shall meet all of the following requirements:

(A) Apply to an entire calendar year averaging period, and apply to all gasoline produced during the calendar year at the foreign refinery that is used in the United States.

(B) Remain in effect for each succeeding calendar year averaging period, unless and until the foreign refiner notifies EPA of a termination of the election. The change in election

shall take effect at the beginning of the next calendar year.

(d) *Designation, product transfer documents, and foreign refiner certification.* (1) Any approved foreign small refiner or any foreign refiner having an approved small volume refinery under this subpart O must designate each batch of Sulfur-FRGAS as such at the time the gasoline is produced, unless the refinery has elected to classify no gasoline exported to the United States as Sulfur-FRGAS under paragraph (c)(3)(i) of this section.

(2) On each occasion when any person transfers custody or title to any Sulfur-FRGAS prior to its being imported into the United States, it must include all the following information as part of the product transfer document information in this section:

(i) Identification of the gasoline as Certified Sulfur-FRGAS or as Non-Certified Sulfur-FRGAS.

(ii) The name and EPA refinery registration number of the refinery where the Sulfur-FRGAS was produced.

(3) On each occasion when Sulfur-FRGAS is loaded onto a vessel or other transportation mode for transport to the United States, the foreign refiner shall prepare a certification for each batch of the Sulfur-FRGAS that meets all of the following requirements:

(i) The certification shall include the report of the independent third party under paragraph (f) of this section, and all of the following additional information:

(A) The name and EPA registration number of the refinery that produced the Sulfur-FRGAS.

(B) The identification of the gasoline as Certified Sulfur-FRGAS or Non-Certified Sulfur-FRGAS.

(C) The volume of Sulfur-FRGAS being transported, in gallons.

(D) In the case of Certified Sulfur-FRGAS:

(*1*) The sulfur content as determined under paragraph (f) of this section; and

(*2*) A declaration that the Sulfur-FRGAS is being included in the compliance calculations under § 80.205 for the refinery that produced the Sulfur-FRGAS.

(ii) The certification shall be made part of the product transfer documents for the Sulfur-FRGAS.

(e) *Transfers of Sulfur-FRGAS to non-United States markets.* The foreign refiner is responsible to ensure that all gasoline classified as Sulfur-FRGAS is imported into the United States. A foreign refiner may remove the Sulfur-FRGAS classification, and the gasoline need not be imported into the United States, but only if:

(1)(i) The foreign refiner excludes the volume and sulfur content of the gasoline from the compliance calculations under § 80.205.

(ii) The exclusions under paragraph (e)(1)(i) of this section shall be on the basis of the sulfur content and volumes determined under paragraph (f) of this section; and

(2) The foreign refiner obtains sufficient evidence in the form of documentation that the gasoline was not imported into the United States.

(f) *Load port independent sampling, testing and refinery identification.* (1) On each occasion Sulfur-FRGAS is loaded onto a vessel for transport to the United States a foreign refiner shall have an independent third party do all of the following:

(i) Inspect the vessel prior to loading and determine the volume of any tank bottoms.

(ii) Determine the volume of Sulfur-FRGAS loaded onto the vessel (exclusive of any tank bottoms present before vessel loading).

(iii) Obtain the EPA-assigned registration number of the foreign refinery.

(iv) Determine the name and country of registration of the vessel used to transport the Sulfur-FRGAS to the United States.

(v) Determine the date and time the vessel departs the port serving the foreign refinery.

(2) On each occasion Certified Sulfur-FRGAS is loaded onto a vessel for transport to the United States a foreign refiner shall have an independent third party:

(i) Collect a representative sample of the Certified Sulfur-FRGAS from each vessel compartment subsequent to loading on the vessel and prior to departure of the vessel from the port serving the foreign refinery.

(ii) Prepare a volume-weighted vessel composite sample from the compartment samples, and determine the value for sulfur in accordance with the methodology and requirements specified in § 80.1630, by either of the following:

(A) The third party analyzing the sample.

(B) The third party observing the foreign refiner analyzing the sample.

(iii) Review original documents that reflect movement and storage of the certified Sulfur-FRGAS from the refinery to the load port, and from this review determine all of the following:

(A) The refinery at which the Sulfur-FRGAS was produced.

(B) That the Sulfur-FRGAS remained segregated from all of the following:

(*1*) Non-Sulfur-FRGAS and Non-Certified Sulfur-FRGAS.

(*2*) Other Certified Sulfur-FRGAS produced at a different refinery.

(3) The independent third party shall submit a report:

(i) To the foreign refiner containing the information required under paragraphs (f)(1) and (2) of this section, to accompany the product transfer documents for the vessel; and

(ii) To the Administrator containing the information required under paragraphs (f)(1) and (2) of this section, within thirty days following the date of the independent third party's inspection. This report shall include a description of the method used to determine the identity of the refinery at which the gasoline was produced, assurance that the gasoline remained segregated as specified in paragraph (m)(1) of this section, and a description of the gasoline's movement and storage between production at the source refinery and vessel loading.

(4) The independent third party must do all of the following:

(i) Be approved in advance by EPA, based on a demonstration of ability to perform the procedures required in this paragraph (f).

(ii) Be independent under the criteria specified in § 80.65(f)(2)(iii).

(iii) Sign a commitment that contains the provisions specified in paragraph (i) of this section with regard to activities, facilities and documents relevant to compliance with the requirements of this paragraph (f).

(g) *Comparison of load port and port of entry testing.* (1)(i) Except as described in paragraph (g)(1)(ii) of this section, any foreign refiner and any United States importer of Certified Sulfur-FRGAS shall compare the results from the load port testing under paragraph (f) of this section, with the port of entry testing as reported under paragraph (o) of this section, for the volume of gasoline and the sulfur value.

(ii) Where a vessel transporting Certified Sulfur-FRGAS off loads this gasoline at more than one United States port of entry, and the conditions of paragraph (g)(2)(i) of this section are met at the first United States port of entry, the requirements of paragraph (g)(2) of this section do not apply at subsequent ports of entry if the United States importer obtains a certification from the vessel owner, meeting the requirements of paragraph (r) of this section that the vessel has not loaded any gasoline or blendstock between the first United States port of entry and the subsequent port of entry.

(2)(i) The requirements of this paragraph (g)(2) apply if:

(A) The temperature-corrected volumes determined at the port of entry

and at the load port differ by more than one percent; or

(B) The sulfur value determined at the port of entry is higher than the sulfur value determined at the load port, and the amount of this difference is greater than the reproducibility amount specified for the port of entry test result by ASTM ASTM.

(ii) The United States importer and the foreign refiner shall treat the gasoline as Non-Certified Sulfur-FRGAS, and the foreign refiner shall exclude the gasoline volume and properties from its gasoline sulfur compliance calculations under § 80.205.

(h) *Attest requirements.* All of the following additional procedures shall be carried out by any foreign refiner of Sulfur-FRGAS as part of the applicable attest engagement for each foreign refinery under § 80.415:

(1) The inventory reconciliation analysis under the attest engagement provisions of § 80.128(b) and the tender analysis under § 80.128(c) shall include Non-Sulfur-FRGAS in addition to the gasoline types listed in § 80.128(b) and (c).

(2) Obtain separate listings of all tenders of Certified Sulfur-FRGAS, and of Non-Certified Sulfur-FRGAS. Agree the total volume of tenders from the listings to the gasoline inventory reconciliation analysis in the attest engagement provisions of § 80.128(b), and to the volumes determined by the third party under paragraph (f)(1) of this section.

(3) For each tender under paragraph (h)(2) of this section where the gasoline is loaded onto a marine vessel, report as a finding the name and country of registration of each vessel, and the volumes of Sulfur-FRGAS loaded onto each vessel.

(4) Select a sample from the list of vessels identified in paragraph (h)(3) of this section used to transport Certified Sulfur-FRGAS, in accordance with the attest engagement guidelines in § 80.127, and for each vessel selected perform all of the following:

(i) Obtain the report of the independent third party, under paragraph (f) of this section, and of the United States importer under paragraph (n) of this section.

(A) Agree the information in these reports with regard to vessel identification, gasoline volumes and test results.

(B) Identify, and report as a finding, each occasion the load port and port of entry parameter and volume results differ by more than the amounts allowed in paragraph (g) of this section, and determine whether the foreign refiner adjusted its refinery calculations as required in paragraph (g) of this section.

(ii) Obtain the documents used by the independent third party to determine transportation and storage of the Certified Sulfur-FRGAS from the refinery to the load port, under paragraph (f) of this section. Obtain tank activity records for any storage tank where the Certified Sulfur-FRGAS is stored, and pipeline activity records for any pipeline used to transport the Certified Sulfur-FRGAS, prior to being loaded onto the vessel. Use these records to determine whether the Certified Sulfur-FRGAS was produced at the refinery that is the subject of the attest engagement, and whether the Certified Sulfur-FRGAS was mixed with any Non-Certified Sulfur-FRGAS, Non-Sulfur-FRGAS, or any Certified Sulfur-FRGAS produced at a different refinery.

(5) Select a sample from the list of vessels identified in paragraph (h)(3) of this section used to transport certified and Non-Certified Sulfur-FRGAS, in accordance with the attest engagement guidelines of § 80.127, and for each vessel selected perform the following:

(i) Obtain a commercial document of general circulation that lists vessel arrivals and departures, and that includes the port and date of departure of the vessel, and the port of entry and date of arrival of the vessel.

(ii) Agree the vessel's departure and arrival locations and dates from the independent third party and United States importer reports to the information contained in the commercial document.

(6) Obtain separate listings of all tenders of Non-Sulfur-FRGAS, and perform all of the following:

(i) Agree the total volume of tenders from the listings to the gasoline inventory reconciliation analysis in § 80.128(b).

(ii) Obtain a separate listing of the tenders under paragraph (h)(6) of this section where the gasoline is loaded onto a marine vessel. Select a sample from this listing in accordance with the guidelines in § 80.127, and obtain a commercial document of general circulation that lists vessel arrivals and departures, and that includes the port and date of departure and the ports and dates where the gasoline was off loaded for the selected vessels. Determine and report as a finding the country where the gasoline was off loaded for each vessel selected.

(7) In order to complete the requirements of this paragraph (h) an auditor must:

(i) Be independent of the foreign refiner.

(ii) Be licensed as a Certified Public Accountant in the United States and a citizen of the United States, or be approved in advance by EPA based on a demonstration of ability to perform the procedures required in the attest engagement provisions of §§ 80.125 through 80.130, 80.415 and this paragraph (h).

(iii) Sign a commitment that contains the provisions specified in paragraph (h) of this section with regard to activities and documents relevant to compliance with the requirements of the attest engagement provisions of §§ 80.125 through 80.130, 80.415 and this paragraph (h).

(i) *Foreign refiner commitments.* Any foreign refiner shall commit to and comply with the provisions contained in this paragraph (i) as a condition to being approved for small refiner status or small volume refinery status.

(1) Any United States Environmental Protection Agency inspector or auditor will be given full, complete and immediate access to conduct inspections and audits of the foreign refinery.

(i) Inspections and audits may be either announced in advance by EPA, or unannounced.

(ii) Access will be provided to any location where:

(A) Gasoline is produced;

(B) Documents related to refinery operations are kept;

(C) Gasoline or blendstock samples are tested or stored; and

(D) Sulfur-FRGAS is stored or transported between the foreign refinery and the United States, including storage tanks, vessels and pipelines.

(iii) Inspections and audits may be by EPA employees or contractors to EPA.

(iv) Any documents requested that are related to matters covered by inspections and audits will be provided to an EPA inspector or auditor on request.

(v) Inspections and audits by EPA may include review and copying of any documents related to all of the following:

(A) Approval of the refiner as a small refiner or approval of the refinery as a small volume refinery.

(B) The volume and sulfur content of Sulfur-FRGAS.

(C) The proper classification of gasoline as being Sulfur-FRGAS or as not being Sulfur-FRGAS, or as Certified Sulfur-FRGAS or as Non-Certified Sulfur-FRGAS.

(D) Transfers of title or custody to Sulfur-FRGAS.

(E) Sampling and testing of Sulfur-FRGAS.

(F) Work performed and reports prepared by independent third parties

and by independent auditors under the requirements of this section and § 80.415, including work papers.

(G) Reports prepared for submission to EPA, and any work papers related to such reports.

(vi) Inspections and audits by EPA may include taking samples of gasoline or blendstock, and interviewing employees.

(vii) Any employee of the foreign refiner must be made available for interview by the EPA inspector or auditor, on request, within a reasonable time period.

(viii) English language translations of any documents must be provided to an EPA inspector or auditor, on request, within 10 working days.

(ix) English language interpreters must be provided to accompany EPA inspectors and auditors, on request.

(2) An agent for service of process located in the District of Columbia will be named, and service on this agent constitutes service on the foreign refiner or any employee of the foreign refiner for any action by EPA or otherwise by the United States related to the requirements of this subpart O.

(3) The forum for any civil or criminal enforcement action related to the provisions of this section for violations of the Clean Air Act or regulations promulgated thereunder shall be governed by the Clean Air Act, including the EPA administrative forum where allowed under the Clean Air Act.

(4) United States substantive and procedural laws shall apply to any civil or criminal enforcement action against the foreign refiner or any employee of the foreign refiner related to the provisions of this section.

(5) Submitting a petition for approval as a small refiner or for small volume refinery status, producing and exporting gasoline under such approval, and all other actions to comply with the requirements of this subpart O constitute actions or activities that satisfy the provisions of 28 U.S.C. 1605(a)(2), but solely with respect to actions instituted against the foreign refiner, its agents and employees in any court or other tribunal in the United States for conduct that violates the requirements applicable to the foreign refiner under this subpart O, including conduct that violates 18 U.S.C. 1001 or Clean Air Act section 113(c)(2) (42 U.S.C. 7413(c)(2)).

(6) The foreign refiner, or its agents or employees, must not seek to detain or to impose civil or criminal remedies against EPA inspectors or auditors, whether EPA employees or EPA contractors, for actions performed within the scope of EPA employment related to the provisions of this section.

(7) The commitment required by this paragraph (i) must be signed by the owner or president of the foreign refiner business.

(8) In any case where FRGAS produced at a foreign refinery is stored or transported by another company between the refinery and the vessel that transports the Sulfur-FRGAS to the United States, the foreign refiner shall obtain from each such other company a commitment that meets the requirements specified in paragraphs (i)(1) through (7) of this section.

(j) *Sovereign immunity.* By submitting a petition for approval as a small refiner or approval of a small volume refinery under this subpart O and this section, or by producing and exporting gasoline to the United States under such an approval under this section, the foreign refiner, its agents and employees, without exception, become subject to the full operation of the administrative and judicial enforcement powers and provisions of the United States without limitation based on sovereign immunity, with respect to actions instituted against the foreign refiner, its agents and employees in any court or other tribunal in the United States for conduct that violates the requirements applicable to the foreign refiner under this subpart O, including conduct that violates Title 18 U.S.C. section 1001 or Clean Air Act section 113(c)(2) (42 U.S.C. 7413(c)(2)).

(k) *Bond posting.* Any foreign refiner must meet the requirements of this paragraph (k) as a condition to being approved for small refiner or small volume refinery status.

(l) The foreign refiner shall post a bond of the amount calculated using the following equation:

$$\text{Bond} = G \times \$0.01$$

Where:

Bond = Amount of the bond in U. S. dollars.

G = The largest volume of gasoline produced at the foreign refinery and exported to the United States, in gallons, during a single calendar year among the most recent of the following calendar years, up to a maximum of three calendar years: The calendar year immediately preceding the date the approval petition is submitted, the calendar year the approval petition is submitted, and each succeeding calendar year.

(2) Bonds shall be posted by performing any of the following:

(i) Paying the amount of the bond to the Treasurer of the United States.

(ii) Obtaining a bond in the proper amount from a third party surety agent that is payable to satisfy United States administrative or judicial judgments against the foreign refiner, provided EPA agrees in advance as to the third party and the nature of the surety agreement.

(iii) An alternative commitment that results in assets of an appropriate liquidity and value being readily available to the United States, provided EPA agrees in advance as to the alternative commitment.

(3) If the bond amount for a foreign refinery increases, the foreign refiner shall increase the bond to cover the shortfall within 90 days of the date the bond amount changes. If the bond amount decreases, the foreign refiner may reduce the amount of the bond beginning 90 days after the date the bond amount changes.

(4) Bonds posted under this paragraph (k) shall:

(i) Be used to satisfy any judicial judgment that results from an administrative or judicial enforcement action for conduct in violation of this subpart O, including where such conduct violates Title 18 U.S.C. section 1001 and Clean Air Act section 113(c)(2) (42 U.S.C. 7413(c)(2));

(ii) Be provided by a corporate surety that is listed in the United States Department of the Treasury Circular 570 ''Companies Holding Certificates of Authority as the Acceptable Sureties on Federal Bonds and Acceptable Reinsuring Companies'' (Available from the U.S. Department of the Treasury, Financial Management Service, Surety Bond Branch, 3700 East-West Highway, Room 6A04, Hyattsville, MD, 20782. Also available on the internet at *http://www.fms.treas.gov/c570/c570.html*); and

(iii) Include a commitment that the bond will remain in effect for at least five years following the end of latest averaging period that the foreign refiner produces gasoline pursuant to the requirements of this subpart O.

(5) On any occasion a foreign refiner bond is used to satisfy any judgment, the foreign refiner shall increase the bond to cover the amount used within 90 days of the date the bond is used.

(l) *English language reports.* Any report or other document submitted to EPA by any foreign refiner must be in English, or must include an English language translation.

(m) *Prohibitions.* (1) No person may combine Certified Sulfur-FRGAS with any Non-Certified Sulfur-FRGAS or Non-Sulfur-FRGAS, and no person may combine Certified Sulfur-FRGAS with any Certified Sulfur-FRGAS produced at a different refinery, until the importer has met all the requirements of paragraph (n) of this section, except as provided in paragraph (e) of this section.

(2) No foreign refiner or other person may cause another person to commit an action prohibited in paragraph (m)(1) of this section, or that otherwise violates the requirements of this section.

(n) *United States importer requirements.* Any United States importer shall meet the following requirements:

(1) Each batch of imported gasoline shall be classified by the importer as being Sulfur-FRGAS or as Non-Sulfur-FRGAS, and each batch classified as Sulfur-FRGAS shall be further classified as Certified Sulfur-FRGAS or as Non-certified Sulfur-FRGAS.

(2) Gasoline shall be classified as Certified Sulfur-FRGAS or as Non-Certified Sulfur-FRGAS according to the designation by the foreign refiner if this designation is supported by product transfer documents prepared by the foreign refiner as required in paragraph (d) of this section, unless the gasoline is classified as Non-Certified Sulfur-FRGAS under paragraph (g) of this section.

(3) For each gasoline batch classified as Sulfur-FRGAS, any United States importer shall perform the following procedures:

(i) In the case of both Certified and Non-Certified Sulfur-FRGAS, have an independent third party:

(A) Determine the volume of gasoline in the vessel.

(B) Use the foreign refiner's Sulfur-FRGAS certification to determine the name and EPA-assigned registration number of the foreign refinery that produced the Sulfur-FRGAS.

(C) Determine the name and country of registration of the vessel used to transport the Sulfur-FRGAS to the United States.

(D) Determine the date and time the vessel arrives at the United States port of entry.

(ii) In the case of Certified Sulfur-FRGAS, have an independent third party:

(A) Collect a representative sample from each vessel compartment subsequent to the vessel's arrival at the United States port of entry and prior to off loading any gasoline from the vessel.

(B) Prepare a volume-weighted vessel composite sample from the compartment samples.

(C) Determine the sulfur value using the methodologies specified in § 80.1630, by:

(*1*) The third party analyzing the sample; or

(*2*) The third party observing the importer analyzing the sample.

(4) Any importer shall submit reports within thirty days following the date any vessel transporting Sulfur-FRGAS arrives at the United States port of entry:

(i) To the Administrator containing the information determined under paragraph (n)(3) of this section; and

(ii) To the foreign refiner containing the information determined under paragraph (n)(3) of this section.

(5) Any United States importer shall meet the applicable requirements of this subpart O, including sulfur content standards specified in § 80.1603, for any imported gasoline that is not classified as Certified Sulfur-FRGAS under paragraph (n)(2) of this section.

(o) *Truck imports of Certified Sulfur-FRGAS produced by a foreign small refiner or foreign small volume refinery.* (1) Any refiner whose Certified Sulfur-FRGAS is transported into the United States by truck may petition EPA to use alternative procedures to meet all of the following requirements:

(i) Certification under paragraph (d)(5) of this section.

(ii) Load port and port of entry sampling and testing under paragraphs (f) and (g) of this section.

(iii) Attest under paragraph (h) of this section.

(iv) Importer testing under paragraph (n)(3) of this section.

(2) These alternative procedures must ensure Certified Sulfur-FRGAS remains segregated from Non-Certified Sulfur-FRGAS and from Non-Sulfur-FRGAS until it is imported into the United States. The petition will be evaluated based on whether it adequately addresses all of the following:

(i) Provisions for monitoring pipeline shipments, if applicable, from the refinery, that ensure segregation of Certified Sulfur-FRGAS from that refinery from all other gasoline.

(ii) Contracts with any terminals and/or pipelines that receive and/or transport Certified Sulfur-FRGAS, that prohibit the commingling of such Certified Sulfur-FRGAS with any of the following:

(A) Other Certified Sulfur-FRGAS from other refineries.

(B) All Non-Certified Sulfur-FRGAS.

(C) All Non-Sulfur-FRGAS

(iii) Procedures for obtaining and reviewing truck loading records and United States import documents for Certified Sulfur-FRGAS to ensure that such gasoline is only loaded into trucks making deliveries to the United States.

(iv) Attest procedures to be conducted annually by an independent third party that review loading records and import documents based on volume reconciliation, or other criteria, to confirm that all Certified Sulfur-FRGAS remains segregated throughout the distribution system and is only loaded into trucks for import into the United States.

(3) The petition required by this section must be submitted to EPA along with the application for small refiner status or small volume refinery status under § 80.1622 and this section.

(p) *Withdrawal or suspension of a foreign refinery's small refiner or small volume refinery status approval.* EPA may withdraw or suspend approval where any of the following occur:

(1) A foreign refiner fails to meet any requirement of this section.

(2) A foreign government fails to allow EPA inspections as provided in paragraph (i)(1) of this section.

(3) A foreign refiner asserts a claim of, or a right to claim, sovereign immunity in an action to enforce the requirements in this subpart O.

(4) A foreign refiner fails to pay a civil or criminal penalty that is not satisfied using the foreign refiner bond specified in paragraph (k) of this section.

(q) [Reserved]

(r) *Additional requirements for petitions, reports and certificates.* Any petition for approval, any alternative procedures under paragraph (o) of this section, and any certification under paragraph (d)(3) of this section shall be:

(1) Submitted in accordance with procedures specified by the Administrator, including use of any forms that may be specified by the Administrator; and

(2) Be signed by the president or owner of the foreign refiner company, or by that person's immediate designee, and shall contain the following declaration:

I hereby certify: (1) That I have actual authority to sign on behalf of and to bind [insert name of foreign refiner] with regard to all statements contained herein; (2) that I am aware that the information contained herein is being certified, or submitted to the United States Environmental Protection Agency, under the applicable requirements of 40 CFR Part 80, subparts H and O, and that the information is material for determining compliance under these regulations; and (3) that I have read and understand the information being certified or submitted, and this information is true, complete and correct to the best of my knowledge and belief after I have taken reasonable and appropriate steps to verify the accuracy thereof.

I affirm that I have read and understand the provisions of 40 CFR Part 80, subpart O, including 40 CFR 80.1666 [insert name of foreign refiner]. Pursuant to Clean Air Act section 113(c) and Title 18, United States Code, section 1001, the penalty for furnishing false, incomplete or misleading information in this certification or

submission is a fine of up to $10,000, and/or imprisonment for up to five years.

§ 80.1667 Attest engagement requirements.

In addition to the requirements for attest engagements that apply to refiners and importers under §§ 80.125 through 80.130, and 80.1666, the attest engagements for importers and refiners must include the following procedures and requirements each year.

(a) *Refiners subject to national standards and Small refiner and Small Volume Refinery Status.* (1) If the refiner asserts small refinery status or small volume refinery status for the refinery, obtain the EPA approval letter for the refinery to determine the refinery's applicable annual average standard and credit generation status.

(2) Determine whether the refinery applied the correct annual average sulfur standard and whether it was eligible to generate credits and report the finding.

(3) If the annual average sulfur standard is incorrect or credit generation was inappropriate, recalculate compliance using the appropriate sulfur standard and using appropriate credits and report as a finding.

(b) *EPA reports.* (1) Obtain and read a copy of the refinery's or importer's annual sulfur reports filed with EPA for the year.

(2) Agree the yearly volume of gasoline reported to EPA in the sulfur reports with the inventory reconciliation analysis under the attest engagement provisions of § 80.128.

(3) Calculate the annual average sulfur level for all gasoline and agree that value with the value reported to EPA.

(4) Obtain and read a copy of the refinery's or importer's sulfur credit report.

(5) Agree the information in the refinery's or importer's batch reports filed with EPA under §§ 80.75 and 80.105, and any laboratory test results, with the information contained in the annual sulfur report required under § 80.1652.

(c) *Credit generation before 2017.* In the case of a refinery that generates credits during 2014 through 2016:

(1) Obtain a written representation from the company representative stating the refinery produces gasoline from crude oil.

(2) Obtain the annual average sulfur level from paragraph (b)(3) of this section.

(3) Compute and report as a finding the total number of sulfur credits generated, and agree this value with the value reported to EPA.

(d) *Credit generation in 2017 and thereafter.* The following procedures shall be completed for a refinery or importer that generates credits in 2017 and thereafter:

(1) Obtain the annual average sulfur level for gasoline from paragraph (b)(3) of this section.

(2) If the sulfur value under paragraph (d)(1) of this section is less than 10 ppm, compute and report as a finding the difference between the sulfur level under paragraph (d)(1) of this section and 10 ppm.

(3) Compute and report as a finding the total number of sulfur credits generated, and agree this number with the number reported to EPA.

(e) *Credit purchases and sales.* The following attest procedures shall be completed for a refinery or importer that is a transferor or transferee of credits during an averaging period:

(1) Obtain contracts or other documents for all credits transferred to another refinery or importer during the year being reviewed; compute and report as a finding the number and year of creation of credits represented in these documents as being transferred away; and agree with the report to EPA.

(2) Obtain contracts or other documents for all credits received during the year being reviewed; compute and report as a finding the number and year of creation of credits represented in these documents as being received; and agree with the report to EPA.

(f) *Credit expiration.* A refinery or importer that possesses credits during an averaging period must obtain a list of all credits in the refiner's or importer's possession at any time during the year being reviewed, identified by the year of creation of the credits.

(g) *Credit reconciliation.* The following attest procedures shall be completed each year credits were in the refiner's or importer's possession at any time during the year:

(1) Obtain the credits remaining or the credit deficit from the previous year from the refiner's or importer's report to EPA for the previous year.

(2) Compute and report as a finding the net credits remaining at the conclusion of the year being reviewed by totaling:

(i) Credits remaining from the previous year; plus

(ii) Credits generated under in an averaging period; plus

(iii) Credits purchased; minus

(iv) Credits sold; minus

(v) Credits used; minus

(vi) Credits expiring; minus

(vii) Credit deficit from the previous year.

(3) Agree the credits remaining or the credit deficit at the conclusion of the year being reviewed with the report to EPA.

(4) If the refinery or importer had a credit deficit for both the previous year and the year being reviewed, report this fact as a finding.

§§ 80.1668–80.1674 [Reserved]

§ 80.1675 Incorporation by reference.

(a) Certain material is incorporated by reference into this part with the approval of the Director of the Federal Register under 5 U.S.C. 552(a) and 1 CFR part 51. To enforce any edition other than that specified in this section, the Environmental Protection Agency (EPA) must publish notice of change in the **Federal Register** and the material must be available to the public. All approved material is available for inspection at the National Archives and Records Administration (NARA). For information on the availability of this material at NARA, call 202–741–6030 or go to: *http://www/archives.gov/federal_register/code_of_federal_regulations/ibr_locations.html.* This material is also available for inspection at the EPA Docket Center, Docket No. EPA–HQ–OAR–2005–0161, EPA/DC, EPA West, Room 3334, 1301 Constitution Ave. NW., Washington, DC. The telephone number for the Air Docket is (202) 566–1742. Also, this material is available from the source listed in paragraph (b) of this section.

(b) ASTM International, 100 Barr Harbor Drive, P.O. Box C–700, West Conshohocken, Pennsylvania 19428 (1–800–262–1373, *www.astm.org*).

(1) ASTM D 4814–11 (''ASTM D 4814''), Standard Specification for Automotive Spark-Ignition Engine Fuel, Approved 2011; IBR approved for § 80.177.

(2) ASTM D 4057–95 (''ASTM D 4507''), Approved 1995; IBR approved for § 80.1630.

(3) ASTM D 4177–95 (''ASTM D 4177''), Approved 1995; IBR approved for § 80.1630.

(4) ASTM D 5842–95 (''ASTM D 5842''), Approved 1995; IBR approved for § 80.1630.

PART 85—CONTROL OF AIR POLLUTION FROM MOBILE SOURCES

■ 38. The authority citation for part 85 continues to read as follows:

Authority: 42 U.S.C. 7401–7671q.

Subpart F—[Amended]

■ 39. Section 85.510 is amended by revising paragraph (b)(9) to read as follows:

§ 85.510 Exemption provisions for new and relatively new vehicles/engines.

* * * * *

(b) * * *

(9) *OBD requirements.* (i) The OBD system must properly detect and identify malfunctions in all monitored emission-related powertrain systems or components including any new monitoring capability necessary to identify potential emission problems associated with the new fuel.

(ii) Conduct all OBD testing necessary to demonstrate compliance with 40 CFR 86.010–18 or 86.1806–05.

(iii) Submit the applicable OBD reporting requirements set forth in 40 CFR part 86, subparts A and S, and submit the following statement of compliance if the OEM vehicles/engines were required to be OBD-equipped:

The test group/engine family converted to an alternative fuel has fully functional OBD systems and therefore meets the OBD requirements specified in 40 CFR part 86 when operating on the alternative fuel.

* * * * *

■ 40. Section 85.515 is amended by revising paragraph (b)(9)(iii) to read as follows:

§ 85.515 Exemption provisions for intermediate age vehicles/engines.

* * * * *

(b) * * *

(9) * * *

(iii) In addition to conducting OBD testing described in this paragraph (b)(9), you must submit to EPA the following statement of compliance if the OEM vehicles/engines were required to be OBD-equipped:

The test group/engine family converted to an alternative fuel has fully functional OBD systems and therefore meets the OBD requirements specified in 40 CFR part 86 when operating on the alternative fuel.

* * * * *

■ 41. Section 85.520 is amended by revising paragraph (b)(4)(iii) to read as follows:

§ 85.520 Exemption provisions for outside useful life vehicles/engines.

* * * * *

(b) * * *

(4) * * *

(iii) In addition to conducting OBD testing described in this paragraph (b)(4), you must submit to EPA the following statement of compliance if the OEM vehicles/engines were required to be OBD-equipped:

The test group/engine family converted to an alternative fuel has fully functional OBD systems and therefore meets the OBD requirements specified in 40 CFR part 86 when operating on the alternative fuel.

* * * * *

Subpart P—[Amended]

■ 42. Section 85.1515 is revised to read as follows:

§ 85.1515 Emission standards and test procedures applicable to imported nonconforming motor vehicles and motor vehicle engines.

(a) Notwithstanding any other requirements of this subpart, any motor vehicle or motor vehicle engine conditionally imported pursuant to § 85.1505 or § 85.1509 and required to be emission tested shall be tested using the *FCT* at 40 CFR part 86 applicable to current model year motor vehicles and motor vehicle engines at the time of testing or reduced testing requirements as follows:

(1) ICIs are eligible for reduced testing under this paragraph (a) subject to the following conditions:

(i) The OEM must have a valid certificate of conformity covering the vehicle.

(ii) The vehicle must be in its original configuration as certified by the OEM. This applies for all emission-related components, including the electronic control module, engine calibrations, and all evaporative/refueling control hardware. It also applies for OBD software and hardware, including all sensors and actuators.

(iii) The vehicle modified as described in paragraph (a)(1)(ii) of this section must fully comply with all applicable emission standards and requirements.

(iv) Vehicles must have the proper OBD systems installed and operating. When faults are present, the ICI must test and verify the system's ability to find the faults (such as disconnected components), set codes, and illuminate the light, and set readiness codes as appropriate for each vehicle. When no fault is present, the ICI must verify that after sufficient prep driving (typically one FTP test cycle), all OBD readiness codes are set and the OBD system does not indicate a malfunction (i.e., no codes set and no light illuminated).

(v) The ICI may not modify more than 300 vehicles in any given model year using reduced testing provisions in this paragraph (a).

(vi) The ICI must state in the application for certification that it will meet all the conditions in this paragraph (a)(1).

(2) The following provisions allow for ICIs to certify vehicles with reduced testing:

(i) In addition to the test waivers specified in 40 CFR 86.1829, you may provide a statement in the application for certification, supported by engineering analysis, that vehicles comply with any of the following standards that apply instead of submitting test data:

(A) Cold temperature CO and NMHC emission standards specified in 40 CFR 86.1811.

(B) SFTP emission standards specified in 40 CFR 86.1811 and 86.1816 for all pollutants.

(C) For anything other than diesel-fueled vehicles, PM emission standards specified in 40 CFR 86.1811 and 86.1816.

(D) Any running loss, refueling, spitback, bleed emissions, and leak standards specified in 40 CFR part 86, subparts A and S.

(ii) You must perform testing and submit test data as follows to demonstrate compliance with emission standards:

(A) *Exhaust and fuel economy tests.* You must measure emissions over the FTP driving cycle and the highway fuel economy driving cycle as specified in 40 CFR 600.109 to meet the fuel economy requirements in 40 CFR part 600 and demonstrate compliance with the exhaust emission standards in 40 CFR part 86 (other than PM). Measure exhaust emissions and fuel economy with the same test procedures used by the original manufacturer to test the vehicle for certification. However, you must use an electric dynamometer meeting the requirements of § 86.108 or 40 CFR part 1066, subpart B, unless we approve a different dynamometer based on excessive compliance costs. If you certify based on testing with a different dynamometer, you must state in the application for certification that all vehicles in the emission family will comply with emission standards if tested on an electric dynamometer.

(B) *Evaporative emission test.* You may measure evaporative emissions as specified in this paragraph (a)(2)(ii)(B) to demonstrate compliance with the evaporative emission standards in 40 CFR part 86 instead of the otherwise specified procedures. Use measurement equipment for evaporative measurements specified in 40 CFR part 86, subpart B, except that the evaporative emission enclosure does not need to accommodate varying ambient temperatures. The evaporative measurement procedure is integral to the procedure for measuring exhaust emissions over the FTP driving cycle as described in paragraph (a)(ii)(2)(A) of this section. Perform canister preconditioning using the same

procedure used by the original manufacturer to certify the vehicle; perform this canister loading before the initial preconditioning drive. Perform a diurnal emission test at the end of the stabilization period before the exhaust emission test by heating the fuel from 60 to 84 °F, either by exposing the vehicle to increasing ambient temperatures or by applying heat directly to the fuel tank. Measure hot soak emissions as described in 40 CFR 86.138–96(k). We may approve alternative measurement procedures that are equivalent to or more stringent than the specified procedures if the specified procedures are impractical for particular vehicle models or measurement facilities. The sum of the measured diurnal and hot soak values must meet the appropriate emission standard as specified in this section.

(b) The emission standards applicable to nonconforming light-duty vehicles and light-duty trucks imported pursuant to this subpart are outlined in tables 1 and 2 of this section, respectively. The useful life as specified in tables 1 and 2 of this section is applicable to imported light-duty vehicles and light-duty trucks, respectively.

(c)(1) Nonconforming motor vehicles or motor vehicle engines of 1994 OP year and later conditionally imported pursuant to § 85.1505 or § 85.1509 shall meet all of the emission standards specified in 40 CFR part 86 for the OP year of the vehicle or motor vehicle engine. The useful life specified in 40 CFR part 86 for the OP year of the motor vehicle or motor vehicle engine is applicable where useful life is not designated in this subpart.

(2)(i) Nonconforming light-duty vehicles and light light-duty trucks (LDV/LLDTs) originally manufactured in OP years 2004, 2005 or 2006 must meet the FTP exhaust emission standards of bin 9 in Tables S04–1 and S04–2 in 40 CFR 86.1811–04 and the evaporative emission standards for light-duty vehicles and light light-duty trucks specified in 40 CFR 86.1811–01(e)(5).

(ii) Nonconforming LDT3s and LDT4s (HLDTs) and medium-duty passenger vehicles (MDPVs) originally manufactured in OP years 2004 through 2006 must meet the FTP exhaust emission standards of bin 10 in Tables S04–1 and S04–2 in 40 CFR 86.1811–04 and the applicable evaporative emission standards specified in 40 CFR 86.1811–04(e)(5). For 2004 OP year HLDTs and MDPVs where modifications commence on the first vehicle of a test group before December 21, 2003, this requirement does not apply to the 2004 OP year. ICIs opting to bring all of their 2004 OP year HLDTs and MDPVs into compliance with the exhaust emission standards of bin 10 in Tables S04–1 and S04–2 in 40 CFR 86.1811–04, may use the optional higher NMOG values for their 2004–2006 OP year LDT2s and 2004–2008 LDT4s.

(iii) Nonconforming LDT3s and LDT4s (HLDTs) and medium-duty passenger vehicles (MDPVs) originally manufactured in OP years 2007 and 2008 must meet the FTP exhaust emission standards of bin 8 in Tables S04–1 and S04–2 in 40 CFR 86.1811–04 and the applicable evaporative standards specified in 40 CFR 86.1811–04(e)(5).

(iv) Nonconforming LDV/LLDTs originally manufactured in OP years 2007 through 2021 and nonconforming HLDTs and MDPVs originally manufactured in OP year 2009 through 2021 must meet the FTP exhaust emission standards of bin 5 in Tables S04–1 and S04–2 in 40 CFR 86.1811–04, and the evaporative standards specified in 40 CFR 86.1811–04(e)(1) through (4).

(v) ICIs are exempt from the Tier 2 and the interim non-Tier2 phase-in intermediate percentage requirements for exhaust, evaporative, and refueling emissions described in 40 CFR 86.1811–04.

(vi) In cases where multiple standards exist in a given model year in 40 CFR part 86 due to phase-in requirements of new standards, the applicable standards for motor vehicle engines required to be certified to engine-based standards are the least stringent standards applicable to the engine type for the OP year.

(vii) Nonconforming LDV/LLDTs originally manufactured in OP years 2009 through 2021 must meet the evaporative emission standards in Table S09–1 in 40 CFR 86.1811–09(e). However, LDV/LLDTs originally manufactured in OP years 2009 and 2010 and imported by ICIs who qualify as small volume manufacturers as defined in 40 CFR 86.1838–01 are exempt from the LDV/LLDT evaporative emission standards in Table S09–1 in 40 CFR 86.1811–09(e), but must comply with the Tier 2 evaporative emission standards in Table S04–3 in 40 CFR 86.1811–04(e).

(viii) Nonconforming HLDTs and MDPVs originally manufactured in OP years 2010 through 2021 must meet the evaporative emission standards in Table S09–1 in 40 CFR 86.1811–09(e). However, HLDTs and MDPVs originally manufactured in OP years 2010 and 2011 and imported by ICIs, who qualify as small volume manufacturers as defined in 40 CFR 86.1838–01, are exempt from the HLDTs and MDPVs evaporative emission standards in Table S09–1 in 40 CFR 86.1811–09(e), but must comply with the Tier 2 evaporative emission standards in Table S04–3 in 40 CFR 86.1811–04(e).

(ix) Nonconforming LDVs, LDTs, MDPVs, and complete heavy-duty vehicles at or below 14,000 pounds GVWR originally manufactured in OP years 2022 and later must meet the Tier 3 exhaust and evaporative emission standards in 40 CFR 86.1811 through 86.1816.

(3)(i) As an option to the requirements of paragraph (c)(2) of this section, independent commercial importers may elect to meet lower bins in Tables S04–1 and S04–2 of 40 CFR 86.1811–04 than specified in paragraph (c)(2) of this section and bank or sell NOx credits as permitted in 40 CFR 86.1860–04 and 40 CFR 86.1861–04. An ICI may not meet higher bins in Tables S04–1 and S04–2 of 40 CFR 86.1811–04 than specified in paragraph (c)(2) of this section unless it demonstrates to the Administrator at the time of certification that it has obtained appropriate and sufficient NOx credits from another manufacturer, or has generated them in a previous model year or in the current model year and not transferred them to another manufacturer or used them to address other vehicles as permitted in 40 CFR 86.1860–04 and 40 CFR 86.1861–04.

(ii) Where an ICI desires to obtain a certificate of conformity using a bin higher than specified in paragraph (c)(2) of this section, but does not have sufficient credits to cover vehicles produced under such certificate, the Administrator may issue such certificate if the ICI has also obtained a certificate of conformity for vehicles certified using a bin lower than that required under paragraph (c)(2) of this section. The ICI may then produce vehicles to the higher bin only to the extent that it has generated sufficient credits from vehicles certified to the lower bin during the same model year.

(4) [Reserved]

(5) Except for the situation where an ICI desires to bank, sell or use NOx credits as described in paragraph (c)(3) of this section, the requirements of 40 CFR 86.1811–04 related to fleet average NOx standards and requirements to comply with such standards do not apply to vehicles modified under this subpart.

(6) ICIs using bins higher than those specified in paragraph (c)(2) of this section must monitor their production so that they do not produce more vehicles certified to the standards of such bins than their available credits can cover. ICIs must not have a credit deficit at the end of a model year and are not permitted to use the deficit

carryforward provisions provided in 40 CFR 86.1860–04(e).

(7) The Administrator may condition the certificates of conformity issued to ICIs as necessary to ensure that vehicles subject to paragraph (c) of this section comply with the appropriate average NOx standard for each model year.

(8)(i) Nonconforming LDV/LLDTs originally manufactured in OP years 2010 and later must meet the cold temperature NHMC emission standards in Table S10–1 in 40 CFR 86.1811–10(g).

(ii) Nonconforming HLDTs and MDPVs originally manufactured in OP years 2012 and later must meet the cold temperature NHMC emission standards in Table S10–1 in 40 CFR 86.1811–10(g).

(iii) ICIs, which qualify as small volume manufacturers, are exempt from the cold temperature NMHC phase-in intermediate percentage requirements described in 40 CFR 86.1811–10(g)(3). See 40 CFR 86.1811–04(k)(5)(vi) and (vii).

(iv) As an alternative to the requirements of paragraphs (c)(8)(i) and (ii) of this section, ICIs may elect to meet a cold temperature NMHC family emission level below the cold temperature NMHC fleet average standards specified in Table S10–1 of 40 CFR 86.1811–10 and bank or sell credits as permitted in 40 CFR 86.1864–10. An ICI may not meet a higher cold temperature NMHC family emission level than the fleet average standards in Table S10–1 of 40 CFR 86.1811–10 as specified in paragraphs (c)(8)(i) and (ii) of this section, unless it demonstrates to the Administrator at the time of certification that it has obtained appropriate and sufficient NMHC credits from another manufacturer, or has generated them in a previous model year or in the current model year and not traded them to another manufacturer or used them to address other vehicles as permitted in 40 CFR 86.1864–10.

(v) Where an ICI desires to obtain a certificate of conformity using a higher cold temperature NMHC family emission level than specified in paragraphs (c)(8)(i) and (ii) of this section, but does not have sufficient credits to cover vehicles imported under such certificate, the Administrator may issue such certificate if the ICI has also obtained a certificate of conformity for vehicles certified using a cold temperature NMHC family emission level lower than that required under paragraphs (c)(8)(i) and (ii) of this section. The ICI may then import vehicles to the higher cold temperature NMHC family emission level only to the extent that it has generated sufficient credits from vehicles certified to a family emission level lower than the cold temperature NMHC fleet average standard during the same model year.

(vi) ICIs using cold temperature NMHC family emission levels higher than the cold temperature NMHC fleet average standards specified in paragraphs (c)(8)(i) and (ii) of this section must monitor their imports so that they do not import more vehicles certified to such family emission levels than their available credits can cover. ICIs must not have a credit deficit at the end of a model year and are not permitted to use the deficit carryforward provisions provided in 40 CFR 86.1864–10.

(vii) The Administrator may condition the certificates of conformity issued to ICIs as necessary to ensure that vehicles subject to this paragraph (c)(8) comply with the applicable cold temperature NMHC fleet average standard for each model year.

(d) Except as provided in paragraph (c) of this section, ICI's must not participate in emission-related programs for emissions averaging, banking and trading, or nonconformance penalties.

TABLE 1 TO § 85.1515—EMISSION STANDARDS APPLICABLE TO IMPORTED LIGHT-DUTY MOTOR VEHICLES [1] [2] [3]

OP Year	Hydrocarbon	Carbon monoxide	Oxides of nitrogen	Diesel particulate	Evaporative hydrocarbon	Useful life (years/miles)
1968–76	1.5 gpm	15 gpm	3.1 gpm		6.0 g/test	5/50,000
1977–79	1.5 gpm	15 gpm	2.0 gpm		6.0 g/test	5/50,000
1980	0.41 gpm	7.0 gpm	2.0 gpm		6.0 g/test	5/50,000
1981	0.41 gpm	3.4 gpm	1.0 gpm		2.0 g/test	5/50,000
1982–86	0.41 gpm	3.4 gpm	1.0 gpm	0.60 gpm	2.0 g/test	5/50,000
1987–93	0.41 gpm	3.4 gpm	1.0 gpm	0.20 gpm	2.0 g/test	5/50,000
1994 and later	(4)	(4)	(4)	(4)	(4)	(4)

[1] Diesel particulate standards apply only to diesel fueled light-duty vehicles. Evaporative hydrocarbon standards apply only to non-diesel fueled light-duty vehicles. For alternative fueled light-duty vehicles, the evaporative hydrocarbon standard is interpreted as organic material hydrocarbon equivalent grams carbon per test, as applicable.

[2] No crankcase emissions shall be discharged into the ambient atmosphere from any non-diesel fueled light-duty vehicle.

[3] All light-duty vehicles shall meet the applicable emission standards at both low and high-altitudes according to the procedures specified in 40 CFR part 86 for current model year motor vehicles at the time of testing.

[4] Specified in 40 CFR part 86 for the OP year of the vehicle, as described in paragraph (c) of this section.

TABLE 2 TO § 85.1515—EMISSION STANDARDS APPLICABLE TO IMPORTED LIGHT-DUTY TRUCKS [1] [2] [3] [4] [5]

OP year	Hydrocarbon	Carbon monoxide	Oxides of nitrogen	Diesel particulate	Evaporative hydrocarbon	Useful life (years/miles)
1968–78	2.0 gpm	20 gpm	3.1 gpm		6.0 g/test	5/50,000
1979–80	1.7 gpm	18 gpm	2.3 gpm		6.0 g/test	5/50,000
1981	1.7 gpm	18 gpm	2.3 gpm		2.0 g/test	5/50,000
1982–83	1.7 gpm (2.0)	18 gpm (26)	2.3 gpm (2.3)	0.60 gpm (0.60)	2.0 g/test (2.6)	5/50,000
1984	0.80 gpm (1.0)	10 gpm (14)	2.3 gpm (2.3)	0.60 gpm (0.60)	2.0 g/test (2.6)	5/50,000
1985–86	0.80 gpm (1.0)	10 gpm (14)	2.3 gpm (2.3)	0.60 gpm (0.60)	2.0 g/test (2.6)	11/120,000
1987	0.80 gpm (1.0)	10 gpm (14)	2.3 gpm (2.3)	0.26 gpm (0.26)	2.0 g/test (2.6)	11/120,000
1988–89	0.80 gpm (1.0)	10 gpm (14)	1.2 gpm[6] (1.2)	0.26 gpm[7] (2.0)	2.0 g/test (2.6)	11/120,000
	0.80 gpm (1.0)	10 gpm (14)	1.7 gpm[6] (1.7)	0.45 gpm[7] (0.26)	2.0 g/test (2.6)	11/120,000
	0.80 gpm (1.0)	10 gpm (14)	2.3 gpm[6] (2.3)	0.45 gpm[7] (0.26)	2.0 g/test (2.6)	11/120,000
1990–93	0.80 gpm (1.0)	10 gpm (14)	1.2 gpm[8] (1.2)	0.26 gpm[7] (0.26)	2.0 g/test (2.6)	11/120,000
	0.80 gpm (1.0)	10 gpm (14)	1.7 gpm[8] (1.7)	0.45 gpm[7] (0.26)	2.0 g/test (2.6)	11/120,000

TABLE 2 TO § 85.1515—EMISSION STANDARDS APPLICABLE TO IMPORTED LIGHT-DUTY TRUCKS [1 2 3 4 5]—Continued

OP year	Hydrocarbon	Carbon monoxide	Oxides of nitrogen	Diesel particulate	Evaporative hydrocarbon	Useful life (years/miles)
1994 and later	([9])	([9])	([9])	([9])	([9])	([9])

[1] Diesel particulate standards apply only to diesel fueled light-duty trucks. Evaporative hydrocarbon standards apply only to non-diesel fueled light-duty trucks. For alternative fueled light-duty trucks, the evaporative hydrocarbon standard is interpreted as organic material hydrocarbon equivalent grams carbon per test, as applicable.

[2] No crankcase emissions shall be discharged into the ambient atmosphere from any non-diesel fueled light-duty truck.

[3] A carbon monoxide standard of 0.50% of exhaust flow at curb idle is applicable to all 1984 and later model year light-duty trucks sold to, or owned by, an importer for principal use at other than a designated high-altitude location. This requirement is effective for light-duty trucks sold to, or owned by an importer for principal use at a designated high-altitude location beginning with the 1988 model year.

[4] All 1982 OP year and later light-duty trucks sold to, or owned by, an importer for principal use at a designated high-altitude location shall meet high-altitude emission standards according to the requirements specified in 40 CFR part 86 for current model year light-duty trucks at the time of testing.

[5] Standards in parentheses apply to motor vehicles sold to, or owned by, an importer for principal use at a designated high-altitude location. These standards must be met at high-altitude according to the procedures specified in 40 CFR part 86 for current model year motor vehicles at the time of testing.

[6] The oxides of nitrogen standard of 1.2 gpm applies to light-duty trucks at or below 3,750 pounds loaded vehicle weight and at or below 6,000 pounds GVWR. The 1.7 gpm standard applies to light-duty trucks above 3,750 pound loaded vehicle weight and at or below 6,000 pounds GVWR; the 2.3 gpm standard applies to light-duty trucks above 6,000 pounds GVWR.

[7] The diesel particulate standard of 0.26 gpm applies to light-duty trucks at or below 3,750 pounds loaded vehicle weight; the 0.45 gpm standard applies to light-duty trucks above 3,750 pounds loaded vehicle weight.

[8] The NOx standard of 1.2 gpm applies to light-duty trucks at or below 3,750 pounds loaded vehicle weight; the 1.7 gpm standard applies to light-duty trucks above 3,750 pounds loaded vehicle weight.

[9] Specified in 40 CFR part 86 for the OP year of the vehicle, as described in paragraph (c) of this section.

■ 43. Subpart W, is revised to consist of §§ 85.2201, 85.2207, 85.2222, 85.2223, and 85.2231, to read as follows:

Subpart W—Emission Control System Performance Warranty Short Tests

Sec.
85.2201 Applicability.
85.2207 Onboard diagnostic test standards.
85.2222 Onboard diagnostic test procedures.
85.2223 Onboard diagnostic test report.
85.2231 Onboard diagnostic test equipment requirements.

Subpart W—Emission Control System Performance Warranty Short Tests

§ 85.2201 Applicability.

(a) This subpart describes the test provisions to be employed in conjunction with the Emissions Performance Warranty in subpart V of this part. These provisions generally rely on a vehicle's onboard diagnostic system (OBD) to indicate whether a vehicle passes or fails the test.

(b) The provisions of this subpart may be used to establish warranty eligibility for light-duty vehicles, light-duty trucks, and medium-duty passenger vehicles when tested during the useful life as prescribed in subpart V of this part.

§ 85.2207 Onboard diagnostic test standards.

(a) A vehicle shall fail the OBD test if it is a 1996 or newer vehicle and the vehicle connector is missing, has been tampered with, or is otherwise inoperable.

(b) A vehicle shall fail the OBD test if the malfunction indicator light (MIL) is commanded to be illuminated and it is not visually illuminated according to visual inspection.

(c) A vehicle shall fail the OBD test if the MIL is commanded to be illuminated for one or more diagnostic trouble codes (DTCs), as described in 40 CFR 86.1806.

§ 85.2222 Onboard diagnostic test procedures.

The test sequence for the OBD inspection shall consist of the following steps:

(a) The OBD inspection shall be conducted with the key-on/engine running, with the exception of inspecting for MIL illumination as required in paragraph (d)(4) of this section, during which the inspection shall be conducted with the key-on/engine off.

(b) The inspector shall locate the vehicle connector and plug the test system into the connector.

(c) The test system shall send a Mode $01, PID $01 request in accordance with 40 CFR 86.1806 to determine the OBD evaluation status. The test system shall determine what monitors are supported by the OBD system, and perform the readiness evaluation for applicable monitors in accordance with the requirements and specifications in 40 CFR 86.1806.

(1) Coincident with the beginning of mandatory testing, repair, and retesting based upon the OBD test, if the readiness evaluation indicates that any onboard tests are not complete, the customer shall be instructed to return after the vehicle has been run under conditions that allow completion of all applicable onboard tests. If the readiness evaluation again indicates that any onboard test is not complete, the vehicle shall be failed.

(2) An exception to paragraph (c)(1) of this section is allowed for MY 1996 to MY 2000 vehicles, inclusive, with two or fewer unset readiness monitors, and for MY 2001 and newer vehicles with no more than one unset readiness monitor. Vehicles from those model years which would otherwise pass the OBD inspection, but for the unset readiness code in question, may be issued a passing certificate without being required to operate the vehicle in such a way as to activate those particular monitors. Vehicles from those model years with an unset readiness code that also have a DTC stored resulting in an illuminated MIL must be failed, though setting the unset readiness flag in question shall not be a prerequisite for passing the retest.

(d) The test system shall evaluate the MIL status bit and record status information in the vehicle test record.

(1) If the MIL status bit indicates that the MIL has been commanded to be illuminated, the test system shall send a Mode $03 request in accordance with 40 CFR 86.1806 to determine the stored DTCs. The system shall repeat this cycle until the number of codes reported equals the number expected based on the Mode $01 response. All DTCs resulting in MIL illumination shall be recorded in the vehicle test record and the vehicle shall fail the OBD inspection.

(2) If the MIL bit is not commanded to be illuminated the vehicle shall pass the OBD inspection, even if DTCs are present.

(3) If the MIL bit is commanded to be illuminated, the inspector shall visually inspect the MIL to determine if it is illuminated. If the MIL is commanded to

be illuminated but is not, the vehicle shall fail the OBD inspection.

(4) If the MIL does not illuminate at all when the vehicle is in the key-on/engine-off condition, the vehicle shall fail the OBD inspection, even if no DTCs are present and the MIL has not been commanded on.

§ 85.2223 Onboard diagnostic test report.

(a) Motorists whose vehicles fail the OBD test described in § 85.2222 shall be provided with the OBD test results, including the codes retrieved, the name of the component or system associated with each fault code, the status of the MIL illumination command, and the customer alert statement as stated in paragraph (b) of this section.

(b) In addition to any codes that were retrieved, the test report shall include the following language:

Your vehicle's computerized self-diagnostic system (OBD) registered the faults listed below. The faults are probably an indication of a malfunction of an emission component. However, multiple and/or seemingly unrelated faults may be an indication of an emission-related problem that occurred previously, but upon further evaluation by the OBD system was determined to be only temporary. Therefore, proper diagnosis by a qualified technician is required to positively identify the source of any emission-related problem.

§ 85.2231 Onboard diagnostic test equipment requirements.

(a) The test system interface to the vehicle shall include a plug that conforms to the requirements and specifications of 40 CFR 86.1806.

(b) The test system shall be capable of communicating with the standard data link connector of vehicles with certified OBD systems.

(c) The test system shall be capable of checking for OBD monitors and the evaluation status of supported monitors (test complete/test not complete) in Mode $01 PID $01, as well as be able to request the DTCs, consistent with the requirements and specifications of 40 CFR 86.1806.

PART 86—CONTROL OF EMISSIONS FROM NEW AND IN-USE HIGHWAY VEHICLES AND ENGINES

■ 44. The authority citation for part 86 continues to read as follows:

Authority: 42 U.S.C. 7401–7671q.

■ 45. Section 86.1 is amended by revising paragraphs (d) and (g)(2) to read as follows:

§ 86.1 Reference materials.

* * * * *

(d) California Air Resources Board, 1001 I Street, Sacramento, CA 95812, (916) 322–2884, *http://www.arb.ca.gov*.

(1) California Requirements Applicable to the LEV III Program, Title 13, § 1961.2 and § 1976(b)1)(G) of the California Code of Regulations, approved on March 22, 2012, IBR approved for § 86.1803–01.

(2) California Regulatory Requirements Applicable to the National Low Emission Vehicle Program, October 1996, IBR approved for §§ 86.113–04 and 86.612–97.

(3) California Regulatory Requirements known as On-board Diagnostics II (OBD–II), Approved on April 21, 2003, Title 13, California Code of Regulations, Section 1968.2, Malfunction and Diagnostic System Requirements for 2004 and Subsequent Model-Year Passenger Cars, Light-Duty Trucks, and Medium-Duty Vehicles and Engines (OBD–II), IBR approved for § 86.1806–05.

(4) California Regulatory Requirements known as On-board Diagnostics II (OBD–II), Approved on November 9, 2007, Title 13, California Code of Regulations, Section 1968.2, Malfunction and Diagnostic System Requirements for 2004 and Subsequent Model-Year Passenger Cars, Light-Duty Trucks, and Medium-Duty Vehicles and Engines (OBD–II), IBR approved for §§ 86.007–17, 86.1806–05.

(5) California Regulatory Requirements known as On-board Diagnostics II (OBD–II), Approved on June 17, 2010, Title 13, California Code of Regulations, Section 1968.2, Malfunction and Diagnostic System Requirements for 2004 and Subsequent Model-Year Passenger Cars, Light-Duty Trucks, and Medium-Duty Vehicles and Engines (OBD–II), IBR approved for § 86.1806–17.

* * * * *

(g) * * *

(2) SAE J1634, Revised October 2012, Battery Electric Vehicle Energy Consumption and Range Test Procedure, IBR approved for § 86.1811–04(n).

* * * * *

Subpart A—[Amended]

■ 46. Section 86.000–7 is amended as follows:

■ a. By revising the introductory text.

■ b. By removing and reserving paragraph (h)(1).

■ c. By revising paragraph (h)(6).

■ d. By removing paragraph (h)(7).

§ 86.000–7 Maintenance of records; submittal of information; right of entry.

Section 86.000–7 includes text that specifies requirements that differ from § 86.091–7 or § 86.094–7. Where a paragraph in § 86.091–7 or § 86.094–7 is identical and applicable to § 86.000–7, this may be indicated by specifying the corresponding paragraph and the statement ''[Reserved]. For guidance see § 86.091–7.'' or ''[Reserved]. For guidance see § 86.094–7.''

* * * * *

■ (h) * * *

■ (6) EPA may void ab initio a certificate for a vehicle certified to Tier 1 certification standards or to the respective evaporative and/or refueling test procedure and accompanying evaporative and/or refueling standards as set forth or otherwise referenced in § 86.098–10 for which the manufacturer fails to retain the records required in this section or to provide such information to the Administrator upon request.

* * * * *

§§ 86.000–8, 86.000–9, 86.000–16 [Removed]

■ 47. Remove §§ 86.000–8, 86.000–9, and 86.000–16.

§ 86.000–24 [Amended]

■ 48. Section 86.000–24 is amended as follows:

■ a. By removing the introductory text.

■ b. By removing and reserving paragraphs (a), (b)(1) introductory text, and (b)(1)(iii) through (f).

■ c. By removing and reserving paragraphs (g)(1) and (g)(2).

■ d. By removing paragraph (h).

§§ 86.000–26, 86.000–28, 86.001–9, 86.001–22 [Removed]

■ 49. Remove §§ 86.000–26, 86.000–28, 86.001–9, and 86.001–22.

■ 50. Section 86.001–23 is amended by revising the introductory text and adding a heading to paragraph (c), and removing and reserving paragraphs (c)(1), (f), and (g) to read as follows:

§ 86.001–23 Required data.

Section 86.001–23 includes text that specifies requirements that differ from § 86.098–23. Where a paragraph in § 86.098–23 is identical and applicable to § 86.001–23, this may be indicated by specifying the corresponding paragraph and the statement ''[Reserved]. For guidance see § 86.098–23.''

* * * * *

(c) *Emission data*—

* * * * *

§§ 86.001–25, 86.001–26, 86.001–28, 86.001–30, 86.004–9 [Removed]

■ 51. Remove §§ 86.001–25, 86.001–26, 86.001–28, 86.001–30, and 86.004–9.

■ 52. Section 86.004–21 is amended as follows:

■ a. By revising the introductory text.
■ b. By removing and reserving paragraph (b)(4)(i).
■ c. By removing paragraph (b)(5)(v).
■ d. By removing and reserving paragraphs (k) and (l).

§ 86.004–21 Application for certification.

Section 86.004–21 includes text that specifies requirements that differ from § 86.094–21. Where a paragraph in § 86.094–21 is identical and applicable to § 86.004–21, this may be indicated by specifying the corresponding paragraph and the statement ''[Reserved]. For guidance see § 86.094–21.''

* * * * *

§ 86.004–25 [Amended]

■ 53. Section 86.004–25 is amended by removing and reserving paragraphs (b)(4)(ii) and (b)(4)(iv).
■ 54. Section 86.004–26 is amended as follows:
■ a. By removing the introductory text.
■ b. By removing and reserving paragraphs (a) and (b).
■ c. By revising paragraph (d).

§ 86.004–26 Mileage and service accumulation; emission measurements.

* * * * *

(d)(1) This paragraph (d) applies for heavy-duty engines.

(2)(i) The results of all emission testing shall be supplied to the Administrator. The manufacturer shall furnish to the Administrator explanation for voiding any test. The Administrator will determine if voiding the test was appropriate based upon the explanation given by the manufacturer for the voided test. Tests between test points may be conducted as required by the Administrator. Data from all tests (including voided tests) may be submitted weekly to the Administrator, but shall be delivered to the Administrator within 7 days after completion of the test. In addition, all test data shall be compiled and provided to the Administrator in accordance with § 86.007–23. Where the Administrator conducts a test on a durability data vehicle at a prescribed test point, the results of that test will be used in the calculation of the deterioration factor.

(ii) The results of all emission tests shall be recorded and reported to the Administrator. These test results shall be rounded as specified in 40 CFR part 1065 to the number of decimal places contained in the applicable emission standard expressed to one additional significant figure.

(3) Whenever a manufacturer intends to operate and test a vehicle (or engine) that may be used for emission data, the manufacturer shall retain in its records all information concerning all emission tests and maintenance, including vehicle (or engine) alterations to represent other vehicle (or engine) selections. This information shall be submitted, including the vehicle (or engine) description and specification information required by the Administrator, to the Administrator following the emission data test.

(4) Emission testing of any type with respect to any certification vehicle or engine other than that specified in this subpart is not allowed except as such testing may be specifically authorized by the Administrator.

§ 86.004–28 [Amended]

■ 55. Section 86.004–28 is amended by removing the introductory text and by removing and reserving paragraphs (a), (b), (f), and (g).
■ 56. Section 86.004–30 is amended as follows:
■ a. By revising the introductory text.
■ b. By removing and reserving paragraphs (a)(4), (a)(5), (a)(10)(i), and (a)(11)(i) and (a)(12) through (a)(16).
■ c. By removing paragraphs (a)(19) through (a)(21).
■ d. By removing and reserving paragraphs (b)(1)(i) and (b)(1)(ii).
■ e. By removing paragraph (b)(1)(ii)(C) and (b)(1)(ii)(D).
■ f. By removing and reserving paragraph (b)(4).

§ 86.004–30 Certification.

Section 86.004–30 includes text that specifies requirements that differ from § 86.094–30. Where a paragraph in § 86.094–30 is identical and applicable to § 86.004–30, this may be indicated by specifying the corresponding paragraph and the statement ''[Reserved]. For guidance see § 86.094–30.''

* * * * *

■ 57. Section 86.004–38 is amended by removing the introductory text, removing and reserving paragraph (g), and adding paragraph (i) to read as follows:

§ 86.004–38 Maintenance instructions.

* * * * *

(i) For each new diesel-fueled engine subject to the standards prescribed in § 86.007–11, as applicable, the manufacturer shall furnish or cause to be furnished to the ultimate purchaser a statement that ''This engine must be operated only with ultra low-sulfur diesel fuel (meeting EPA specifications for highway diesel fuel, including a 15 ppm sulfur cap).''

■ 58. Section 86.005–10 is amended by revising the introductory text and paragraph (c) to read as follows:

§ 86.005–10 Emission standards for 2005 and later model year Otto-cycle heavy-duty engines and vehicles.

Section 86.005–10 includes text that specifies requirements that differ from § 86.099–10. Where a paragraph in § 86.099–10 is identical and applicable to § 86.005–10, this may be indicated by specifying the corresponding paragraph and the statement ''[Reserved]. For guidance see § 86.099–10.''

* * * * *

(c) No crankcase emissions shall be discharged into the ambient atmosphere from any new 1998 or later model year Otto-cycle heavy-duty engine.

* * * * *

■ 59. Section 86.007–17 is revised to read as follows:

§ 86.007–17 On-board diagnostics for engines used in applications less than or equal to 14,000 pounds GVWR.

Heavy-duty engines intended to be installed in heavy duty vehicles at or below 14,000 pounds GVWR that are subject to standards under this subpart must meet on-board diagnostic requirements as specified in § 86.1806–17(a), (c), and (d).

§ 86.007–21 [Amended]

■ 60. Section 86.007–21 is amended as follows:
■ a. By removing and reserving paragraph (b)(4)(i).
■ b. By removing paragraphs (b)(9) and (b)(10).
■ c. By removing and reserving paragraphs (k) and (l).
■ 61. Section 86.007–23 is amended by removing and reserving paragraphs (b)(2), (f), (g), and (l) and revising the introductory text and paragraph (c) to read as follows:

§ 86.007–23 Required data.

Section 86.007–23 includes text that specifies requirements that differ from § 86.098–23 or § 86.001–23. Where a paragraph in § 86.098–23 or § 86.001–23 is identical and applicable to § 86.007–23, this may be indicated by specifying the corresponding paragraph and the statement ''[Reserved]. For guidance see § 86.098–23.'' or ''[Reserved]. For guidance see § 86.001–23.''.

* * * * *

(b) * * *

(2) [Reserved]

* * * * *

(c) *Emission data from certification vehicles and engines.* The manufacturer shall submit emission data for each applicable emission standard from vehicles and engines tested in accordance with applicable test procedures and in such numbers as specified. These data shall include zero-

mile or zero-hour data, if generated, and emission data generated for certification as required under § 86.004–26. However, manufacturers may provide a statement in the application for certification that vehicles and engines comply with the following standards instead of submitting test data, provided that the statement is supported by previous emission tests, development tests, or other appropriate information, and good engineering judgment:

(1) Idle CO, smoke, or particulate matter emissions from methanol-fueled or gaseous-fueled diesel-cycle certification engines.

(2) Particulate matter emissions from Otto-cycle certification engines or gaseous-fueled certification engines.

(3) CO emissions from diesel-cycle certification engines.

(4) Formaldehyde emissions from petroleum-fueled engines.

(5) Particulate matter and formaldehyde emissions when conducting Selective Enforcement Audit testing of Otto-cycle engines.

(6) Smoke from methanol-fueled or petroleum-fueled diesel-cycle certification engines.

(7) Smoke when conducting Selective Enforcement Audit testing of diesel-cycle engines.

(8) Evaporative emissions from vehicles fueled by natural gas, liquefied petroleum gas, or hydrogen.

* * * * *

(f) through (g) [Reserved]

* * * * *

(l) [Reserved]

* * * * *

§ 86.007–30 [Amended]

■ 62. Section 86.007—30 is amended as follows:

■ a. By removing and reserving paragraphs (a)(4), (a)(5), (a)(7), (a)(10)(i), (a)(11)(i), and (a)(12) through (a)(16).

■ b. By removing paragraphs (a)(19) through (a)(21).

■ c. By removing and reserving paragraphs (b)(1)(i), (b)(1)(ii), and (b)(4).

■ d. By removing paragraph (f).

■ 63. Section 86.007–35 is amended as follows:

■ a. By revising paragraph (a) introductory text.

■ b. By removing and reserving paragraphs (a)(1) and (a)(2)

■ c. By revising paragraph (c).

■ d. By removing and reserving paragraphs (d), (f), and (i).

§ 86.007–35 Labeling.

* * * * *

(a) The manufacturer of any motor vehicle (or motor vehicle engine) subject to the applicable emission standards (and family emission limits, as appropriate) of this subpart, shall, at the time of manufacture, affix a permanent legible label, of the type and in the manner described below, containing the information hereinafter provided, to all production models of such vehicles (or engines) available for sale to the public and covered by a Certificate of Conformity under § 86.007–30(a).

* * * * *

(c) Vehicles powered by model year 2007 through 2013 diesel-fueled engines must include permanent, readily visible labels on the dashboard (or instrument panel) and near all fuel inlets that state ''Use Ultra Low Sulfur Diesel Fuel Only''; or ''Ultra Low Sulfur Diesel Fuel Only''.

* * * * *

§ 86.007–38 [Removed]

■ 64. Remove § 86.007–38.

■ 65. Section 86.008–10 is amended by removing the introductory text and revising paragraphs (b) introductory text and (e) to read as follows:

§ 86.008–10 Emission standards for 2008 and later model year Otto-cycle heavy-duty engines and vehicles.

* * * * *

(b) This paragraph (b) applies through model year 2013. See 40 CFR 1037.103 for provisions that apply in 2014 and later model years. Evaporative emissions from heavy-duty vehicles shall not exceed the following standards when measured using the test procedures specified in 40 CFR 1037.501. The standards apply equally to certification and in-use vehicles. The spitback standard also applies to newly assembled vehicles. For certification vehicles only, manufacturers may conduct testing to quantify a level of nonfuel background emissions for an individual test vehicle. Such a demonstration must include a description of the source(s) of emissions and an estimated decay rate. The demonstrated level of nonfuel background emissions may be subtracted from emission test results from certification vehicles if approved in advance by the Administrator.

* * * * *

(e) The standards described in this section do not apply to Otto-cycle medium-duty passenger vehicles (MDPVs) that are subject to regulation under subpart S of this part, except as specified in subpart S of this part. The standards described in this section also do not apply to Otto-cycle engines used in such MDPVs, except as specified in subpart S of this part. The term ''medium-duty passenger vehicle'' is defined in § 86.1803.

* * * * *

■ 66. Section 86.010–38 is amended by revising paragraphs (g) and (i) to read as follows:

§ 86.010–38 Maintenance instructions.

* * * * *

(g) *Emission control diagnostic service information.* Manufacturers are subject to the requirements of § 86.1808–01(f) beginning in the 2005 model year for manufacturers of heavy-duty vehicles and heavy-duty engines weighing 14,000 pounds gross vehicle weight (GVW) and less that are subject to the OBD requirements of this part.

* * * * *

(i) Through model year 2013, the manufacturer shall furnish or cause to be furnished to the ultimate purchaser the following statement for each new diesel-fueled engine subject to the standards prescribed in § 86.007–11, as applicable: ''This engine must be operated only with ultra low-sulfur diesel fuel (meeting EPA specifications for highway diesel fuel, including a 15 ppm sulfur cap).''

* * * * *

■ 67. Section 86.016–1 is amended by revising paragraphs (a), (b), and (c) and adding paragraphs (g) and (h) to read as follows:

§ 86.016–1 General applicability.

(a) *Applicability.* The provisions of this subpart apply for certain types of new heavy-duty engines and vehicles as described in this paragraph (a). Note that this subpart does not apply for light-duty vehicles, light-duty trucks, or medium-duty passenger vehicles (see subpart S of this part for requirements that apply for those vehicles). In some cases, manufacturers of heavy-duty engines and vehicles can choose whether to meet the requirements of this subpart or the requirements of subpart S of this part; those provisions are therefore considered optional, but only to the extent that manufacturers comply with the other set of requirements. In cases where a provision applies only for a certain vehicle group based on its model year, vehicle class, motor fuel, engine type, or other distinguishing characteristics, the limited applicability is cited in the appropriate section. The provisions of this subpart apply for certain heavy-duty engines and vehicles as follows:

(1) The provisions of this subpart related to exhaust emission standards apply for diesel-cycle and Otto-cycle heavy-duty engines installed in vehicles above 14,000 pounds GVWR.

(2) The provisions of this subpart related to exhaust emission standards apply as follows for engines that will be installed in incomplete vehicles at or below 14,000 pounds GVWR:

(i) These provisions apply for diesel-cycle engines.

(ii) These provisions are optional for Otto-cycle engines.

(3) Diesel-cycle and Otto-cycle complete heavy-duty vehicles at or below 14,000 pounds GVWR and the corresponding engines are not subject to the provisions of this subpart related to exhaust emission standards, except that these provisions are optional for diesel-cycle engines installed in such vehicles through model year 2018.

(4) The provisions of this subpart related to evaporative emission standards apply for diesel-cycle and Otto-cycle heavy-duty vehicles as follows:

(i) These provisions do not apply for complete vehicles at or below 14,000 pounds GVWR.

(ii) Vehicles above 14,000 pounds GVWR and all sizes of incomplete heavy-duty vehicles must meet evaporative emission standards as specified in § 86.008–10 through model year 2017, and as specified in 40 CFR part 1037 in later model years.

(iii) Note that diesel-fueled vehicles are not subject to evaporative emissions under this part.

(5) The provisions of this subpart related to onboard diagnostics apply for diesel-cycle and Otto-cycle heavy-duty engines and vehicles as follows:

(i) Engines installed in vehicles above 14,000 pounds GVWR must meet the onboard diagnostic requirements specified in § 86.010–18.

(ii) Engines installed in vehicles at or below 14,000 pounds GVWR may optionally comply with the onboard diagnostic requirements specified in § 86.007–17, in which case those vehicles are not subject to separate onboard diagnostic requirements under this part.

(b) *Relationship to subpart S of this part.* Unless specified otherwise, if engines are not subject to provisions of this subpart or if manufacturers choose not to meet optional provisions of this subpart as described in paragraph (a) of this section, those engines must be installed in vehicles meeting the corresponding requirements under subpart S of this part. If a vehicle and its installed engine comply with a mix of provisions from this subpart and from subpart S of this part, the vehicle must be certified under subpart S of this part, and the engine does not need to be certified separately.

(c) *Greenhouse gas emission standards.* See 40 CFR parts 1036 and 1037 for greenhouse gas emission standards that apply for heavy-duty engines and vehicles.

* * * * *

(g) *Clean alternative fuel conversions.* The provisions of this subpart also apply for clean alternative fuel conversions as defined in 40 CFR 85.502 of all vehicles described in paragraph (a) of this section.

(h) *Turbine engines.* Turbine engines are deemed to be compression-ignition engines for purposes of this part.

§ 86.079–36 [Removed]

■ 68. Remove § 86.079–36.

■ 69. Section 86.082–2 is amended by adding definitions for ''Round'' and ''United States'' in alphabetical order to read as follows.

§ 86.082–2 Definitions.

* * * * *

Round has the meaning given in 40 CFR 1065.1001, unless otherwise specified.

* * * * *

United States has the meaning given in 40 CFR 1068.30.

* * * * *

§ 86.085–20 [Removed]

■ 70. Remove § 86.085–20.

§ 86.085–37 [Amended]

■ 71. Section 86.085–37 is amended by removing paragraph (b).

§ 86.087–2 [Removed]

■ 72. Remove § 86.087–2.

§ 86.091–29 [Amended]

■ 73. Section 86.091–29 is amended by removing and reserving paragraph (a).

Section 86.094–7 is amended by adding paragraph (h)(6) to read as follows:

§ 86.094–7 Maintenance of records; submittal of information; right of entry.

* * * * *

(h) * * *

(6) EPA may void ab initio a certificate for a vehicle certified to Tier 1 certification standards or to the respective evaporative and/or refueling test procedure and accompanying evaporative and/or refueling standards as set forth or otherwise referenced in § 86.098–10 for which the manufacturer fails to retain the records required in this section or to provide such information to the Administrator upon request.

* * * * *

§ 86.094–13 [Removed]

■ 75. Remove § 86.094–13.

§ 86.094–14 [Amended]

■ 76. Section 86.094–14 is amended by removing and reserving paragraphs (c)(5) and (c)(7)(i)(A)(*1*).

§ 86.094–16 [Removed]

■ 77. Remove § 86.094–16.

§ 86.094–21 [Amended]

■ 78. Section 86.094–21 is amended by removing paragraph (b)(1)(i)(C) and by removing and reserving paragraphs (b)(4)(i), (b)(5)(iii)(B), (b)(8), (d), and (g).

§ 86.094–25 [Amended]

■ 79. Section 86.094–25 is amended as follows:

■ a. By removing and reserving paragraphs (a), (b)(3)(i)(A), and (b)(3)(ii).

■ b. By removing paragraphs (b)(3)(iii) through (b)(3)(vii).

■ c. By removing and reserving paragraphs (b)(4) through (b)(6), (d), and (g).

§§ 86.094–26 and 86.094–28 [Removed]

■ 80. Remove §§ 86.094–26 and 86.094–28.

§ 86.094–30 [Amended]

■ 81. Section 86.094–30 is amended as follows:

■ a. By removing and reserving paragraphs (a)(1)(ii), (a)(4), (a)(5), and (a)(7).

■ b. By removing paragraphs (a)(9) through (a)(14).

■ c. By removing and reserving paragraphs (b)(1)(i), (b)(1)(ii), and (b)(4).

■ d. By removing and reserving paragraph (d).

§§ 86.095–23, 86.095–26, and 86.095–30 [Removed]

■ 82. Remove §§ 86.095–23, 86.095–26, and 86.095–30.

■ 83. Section 86.095–35 is amended as follows:

■ a. By removing and reserving paragraphs (a)(1) and (a)(2).

■ b. By revising paragraph (a)(4) introductory text.

■ c. By removing and reserving paragraphs (d), (e), and (f).

■ d. By revising paragraph (g) introductory text.

§ 86.095–35 Labeling.

(a) * * *

(1)–(2) [Reserved]

* * * * *

(4) *Heavy-duty vehicles employing a fuel or fuels covered by evaporative emission standards.* This paragraph (a)(4) applies through model year 2013. See 40 CFR part 1037 for provisions that apply in 2014 and later model years.

* * * * *

(d)–(f) [Reserved]

(g) *Incomplete vehicle fuel tank capacity.* This paragraph (g) applies

through model year 2013. See 40 CFR part 1037 for provisions that apply in 2014 and later model years.

* * * * *

§§ 86.096–7, 86.096–8, and 86.096–21 [Removed]

■ 84. Remove §§ 86.096–7, 86.096–8, and 86.096–21.

§ 86.096–24 [Amended]

■ 85. Section 86.096–24 is amended as follows:

■ a. By removing and reserving paragraphs (a)(8) through (a)(11)

■ b. By removing and reserving paragraphs (a)(14)(ii), (a)(14)(iii), and (a)(14)(vii).

■ c. By removing and reserving paragraphs (b)(1), (c)(1), (c)(2), and (d).

■ d. By removing paragraphs (g) and (h).

§§ 86.096–26, 86.096–30, 86.096–35, 86.096–38, and 86.097–9 [Removed]

■ 86. Remove §§ 86.096–26, 86.096–30, 86.096–35, 86.096–38, and 86.097–9.

§ 86.098–23 [Amended]

■ 87. Section 86.098–23 is amended by removing and reserving paragraphs (b)(1)(i), (e)(2), and (e)(3).

§§ 86.098–24, 86.098–25, 86.098–26, 86.098–28, 86.098–30, 86.098–35, 86.099–8, 86.099–9, and 86.099–17 [Removed]

■ 88. Remove §§ 86.098–24, 86.098–25, 86.098–26, 86.098–28, 86.098–30, 86.098–35, 86.099–8, 86.099–9, and 86.099–17.

Subpart B—[Amended]

■ 89. Section 86.101 is revised to read as follows:

§ 86.101 General applicability.

(a) *General provisions.* This subpart describes test procedures for measuring exhaust, evaporative, and refueling emissions from motor vehicles subject to emission standards under subpart S of this part. This generally includes light-duty vehicles, light-duty trucks, and complete heavy-duty vehicles at or below 14,000 pounds GVWR. The following provisions apply for all testing under this subpart:

(1) Provisions of this subpart apply to tests performed by both the Administrator and manufacturers.

(2) References in this subpart to engine families and emission control systems are deemed to apply to durability groups and test groups as applicable.

(3) Except as noted, heavy-duty vehicles are subject to all the same provisions of this subpart that apply to light-duty trucks.

(4) The procedures in this subpart apply for testing vehicles powered by any fuel, except as specified in subpart S of this part.

(5) All emission control systems designed for production vehicles must be functioning during testing. Maintenance to correct component malfunction or failure must be authorized in accordance with § 86.1834.

(6) Evaporative emission measurement procedures of this subpart include specifications for testing methanol-fueled vehicles. For vehicles fueled with other oxygenated fuels, use good engineering judgment to apply these procedures. For example, if you are testing an ethanol-fueled vehicle, calibrate your evaporative emission enclosure with ethanol and propane.

(b) *Migration to 40 CFR part 1066.* This subpart transitions to rely on the test procedure specifications in 40 CFR parts 1065 and 1066 as follows:

(1) Through model year 2021, manufacturers may use the test procedures specified in paragraph (c) or (d) of this section. For any EPA testing before model year 2022, EPA will use the manufacturer's selected procedures for determining road load parameters and applying cycle-verification criteria. For any other parameters, EPA may conduct testing using either of the specified procedures. As allowed under this part, manufacturers may use carryover data from previous model years to demonstrate compliance with emission standards, without regard to the provisions of this section.

(2) Manufacturers must use the following procedures before model year 2022:

(i) For vehicles certified to any of the Tier 3 emission standards specified in subpart S of this part, verify overall driver accuracy based on driven cycle energy and report information as described in 40 CFR 1066.430(j).

(ii) The equipment specifications and measurement procedures related to PM emissions from 40 CFR part 1066 apply for any vehicles certified to the Tier 3 PM emission standards specified in subpart S of this part.

(3) For model years 2022 and later, manufacturers must use the test procedures specified in paragraph (d) of this section.

(c) *Interim procedures.* Test vehicles as described in this subpart for the appropriate model year, through model year 2021, as follows:

(1) Sections 86.106 through 86.115 set forth general testing specifications and equipment requirements. Sections 86.116 through 86.126 discuss calibration methods and frequency. Sections 86.127 through 86.145 describe procedures for measuring exhaust and evaporative emissions. Sections 86.146 through 86.157 lay out refueling test procedures. Sections 86.158 through 86.166 cover procedures related to the Supplemental Federal Test Procedure and testing related to air conditioning systems. The test procedure for measuring fuel system leaks is described in 40 CFR 1066.840.

(2) Alternate equipment, procedures, and calculation methods may be used if shown to yield equivalent or superior results, and if approved in advance by the Administrator.

(d) *Long-term procedures.* Test vehicles as described in this subpart and in 40 CFR parts 1065 and 1066 as follows:

(1) Use fuel for testing and service accumulation as specified in § 86.113.

(2) For exhaust emission testing, measure emissions for all pollutants with an applicable emission standard. Calculate emission results as described in 40 CFR part 1066, subpart G.

(3) The test sequence for the Federal Test Procedure (FTP) includes steps to precondition vehicles for evaporative emission measurements; these steps are required for exhaust testing whether or not testing includes evaporative emission measurements.

(4) Perform evaporative emission tests as follows:

(i) Use evaporative testing equipment meeting the specifications in § 86.107. This equipment must meet calibration requirements as specified in § 86.117.

(ii) Generate fuel test temperature profiles as described in § 86.129–94(d).

(iii) Follow the general provisions and driving schedules described in 40 CFR part 1066, subpart I. Evaporative testing consists of vehicle preconditioning as described in § 86.132, diurnal measurement as described in § 86.133, running loss testing as described in § 86.134, and hot soak testing as described in § 86.138.

(iv) Calculate emission results as described in § 86.143.

(v) Test fuel systems for leaks as described in 40 CFR 1066.840.

(5) Keep records as described in § 86.142.

(6) Perform refueling emission tests, calculate emission results, and keep associated records as described in § 86.146 through 86.157.

■ 90. Section 86.102 is revised to read as follows:

§ 86.102 Definitions.

The definitions in § 86.1803 apply to this subpart.

■ 91. Section 86.106–96 is amended by revising paragraph (a)(3) to read as follows:

§ 86.106–96 Equipment required; overview.

(a) * * *

(3) *Fuel, analytical gas, and driving schedule specifications.* Fuel specifications for exhaust and evaporative emission testing and for mileage accumulation for petroleum-fueled and methanol-fueled vehicles are specified in § 86.113. Analytical gases are specified in § 86.114. The Urban Dynamometer Driving Schedule (UDDS), US06, and SC03 driving schedules, for use in exhaust emission tests, and the New York City Cycle (NYCC), for use with the UDDS in running loss tests, are specified in §§ 86.115, 86.130, 86.159, 86.160, and appendix I to this part.

* * * * *

§ 86.106–00 [Removed]

■ 92. Section 86.106–00 is removed.

§ 86.107–96 [Amended]

■ 93. Section 86.107–96 is amended by removing and reserving paragraph (e).

§§ 86.108–79, 86.110–90 [Removed]

■ 94. Sections 86.108–79 and 86.110–90 are removed.

■ 95. Section 86.110–94 is amended by revising paragraph (d) to read as follows:

§ 86.110–94 Exhaust gas sampling system; diesel-cycle vehicles, and Otto-cycle vehicles requiring particulate emissions measurements.

* * * * *

(d) *Filters, particulate sampling.* Use fluorocarbon-coated glass fiber filters or fluorocarbon-based (membrane) filters to collect particulate matter, as follows:

(1) Use primary and back-up test filters as follows for particulate measurements:

(i) During each phase of the UDDS, sample dilute exhaust simultaneously with paired primary and back-up test filters.

(ii) Position the back-up filter holder 3 to 4 inches downstream of the primary filter holder.

(iii) Determine the net weight of particulate material collected on each primary test filter and each back-up test filter using the procedure described in § 86.139.

(iv) Determine a ratio of net weights using the following formula:

$$\text{Ratio of net weights} = \frac{(\text{Mass Particulate})_{\text{primary filter}}}{(\text{Mass Particulate})_{\text{primary filter}} + (\text{Mass Particulate})_{\text{back-up filter}}}$$

(v) If the ratio is greater than 0.95, base the particulate emission calculations on the net weight of the primary filter only.

(vi) If the ratio is less than 0.95, base the particulate emission calculations on the combined net weights of the back-up test filter and the primary test filter.

(2) The particulate filter must have a 47 mm diameter (37 mm stain area).

§§ 86.111–90 and 86.115–00 [Removed]

■ 96. Sections 86.111–90 and 86.115–00 are removed.

■ 97. Section 86.113–04 is amended by revising paragraphs (a)(2) and (a)(3)(i) to read as follows:

§ 86.113–04 Fuel specifications.

* * * * *

(a) * * *

(2) Manufacturers may use California test fuels, as follows:

(i) For model year 2014 and earlier vehicles certified for 50-state sale, manufacturers may perform exhaust emission tests using California Phase 2 gasoline as specified in Chapter 4 of the California Regulatory Requirements Applicable to the National Low Emission Vehicle Program, October 1996 (incorporated by reference in § 86.1). However, the Administrator may use or require the use of test fuel meeting the specifications in paragraph (a)(1) of this section for certification confirmatory testing, selective enforcement auditing and in-use testing.

(ii) For model year 2015 and later, manufacturers may certify 50-state vehicles based on testing used to meet California's LEV III standards, including the use of California Phase 3 gasoline (E10), subject to the following provisions:

(A) The Administrator will also use this E10 fuel for any testing to confirm that vehicles meet the LEV III standards. Note that all evaporative testing with the E10 fuel must be conducted with temperatures meeting the specifications adopted by the California Air Resources Board.

(B) The manufacturer must also use this E10 fuel for fuel economy measurements, with any appropriate corrections related to ethanol content in the fuel.

(C) The vehicles must also meet standards at high-altitude conditions. The high-altitude standards for a given vehicle are the LEV III standards that apply for low-altitude testing, except that testing is based on the fuel specified in paragraph (a)(1) of this section. Note that heavy-duty vehicles certified under this paragraph (a)(2)(ii)(C) are not subject to SFTP standards at high-altitude conditions. Manufacturers may alternatively use the E15 test fuel specified in § 86.113–07 for high-altitude testing.

(D) The vehicle must meet the applicable cold-temperature standards using the fuel specified in paragraph (a)(1) of this section.

(E) Such vehicles are considered to be Tier 2 vehicles for EPA certification; however, manufacturers must exclude them from the fleet-average NO_X calculation in subpart S of this part.

(3) * * *

(i) Unless otherwise approved by the Administrator, unleaded gasoline representative of commercial gasoline that will be generally available through retail outlets must be used in service accumulation. Unless otherwise approved by the Administrator, where the vehicle is to be used for evaporative emission durability demonstration, such fuel must contain ethanol as required by § 86.1824–08(f)(1) . Leaded gasoline must not be used in service accumulation.

* * * * *

■ 98. Section 86.113–07 is amended by revising the introductory text and paragraph (a) to read as follows:

§ 86.113–07 Fuel specifications.

Section 86.113–07 includes text that specifies requirements that differ from § 86.113–94. Where a paragraph in § 86.113–94 is identical and applicable to § 86.113–07, this may be indicated by specifying the corresponding paragraph and the statement ''[Reserved]. For guidance see § 86.113–94.''

(a) *Gasoline fuel.* This paragraph (a) describes how to transition to an ethanol-blend test fuel for vehicles certified under subpart S of this part. You may use the test fuels specified in § 86.113–04(a) for vehicles that are not yet subject to testing with the new fuel. You may use the specified ethanol-blend test fuel anytime earlier than we specify. Manufacturers must certify using service accumulation fuel and E15 test fuel as specified in 40 CFR 1065, subpart H, on the following schedule:

(1) Use the E15 test fuel to demonstrate compliance with the Tier 3 evaporative emission standards as specified in § 86.1813. Use the E15 test

fuel to demonstrate compliance with the Tier 3 exhaust emission standards as specified in § 86.1811 and 86.1816. Where testing with E15 test fuel is required, this applies for all testing for demonstrating compliance with exhaust emission standards and fuel economy requirements. For vehicles certified for 50-state sale through model year 2019, you may instead use California Phase 3 gasoline (E10) as adopted in California's LEV III program for exhaust and evaporative emission testing at low-altitude conditions; the Administrator will also use this E10 fuel for any low-altitude testing with such vehicles. In the case of evaporative emission tests with California Phase 3 gasoline, perform tests based on the temperatures specified by the California Air Resources Board.

(2) Use the E15 test fuel to demonstrate compliance with the evaporative emission standards specified in § 86.1811–10 starting in model year 2020. You may not certify these vehicles using carryover data based on measurements with E0 test fuel.

(3) Use the E15 test fuel to demonstrate compliance with the refueling emission standards for any vehicles that must be certified to meet the diurnal plus hot soak standards with E15 test fuel under paragraph (a)(1) of this section.

(4) For any vehicles that require testing to demonstrate compliance with the refueling spitback standard, use the E15 test fuel starting in model year 2022.

(5) If a vehicle uses E15 test fuel for evaporative emission testing and E0 or E10 is the applicable test fuel for exhaust emission testing, or vice versa, exhaust measurement and reporting requirements apply over the course of the evaporative emission test, but the vehicle need not meet the exhaust emission standards during the evaporative emission test run.

(6) Use service accumulation fuel as described in 40 CFR part 1065, subpart H, with the additional provisions specified in § 86.113–04(a)(3).

* * * * *

§ 86.113–94 [Amended]

■ 99. Section 86.113–94 is amended by removing and reserving paragraph (a).

■ 100. Section 86.115–78 is amended by revising the section heading and paragraphs (a) and (b) introductory text to read as follows:

§ 86.115–78 EPA dynamometer driving schedules.

(a) The driving schedules for the Urban Dynamometer Driving Schedule, US06, SC03, and the New York City Cycles are specified in appendix I of this part. The driving schedules are defined by a smooth trace drawn through the specified speed vs. time relationships. They each consist of a distinct non-repetitive series of idle, acceleration, cruise, and deceleration modes of various time sequences and rates.

(b) The driver should attempt to follow the target schedule as closely as possible (refer to § 86.128 for additional cycle driving instructions). The speed tolerance at any given time for these schedules, or for a driver's aid chart approved by the Administrator, are as follows:

* * * * *

■ 101. Section 86.117–96 is amended by revising the introductory text and paragraphs (c)(1)(vii) and (c)(1)(ix) to read as follows:

§ 86.117–96 Evaporative emission enclosure calibrations.

The calibration of evaporative emission enclosures consists of three parts: initial and periodic determination of enclosure background emissions (hydrocarbons and methanol); initial determination of enclosure internal volume; and periodic hydrocarbon and methanol retention check and calibration. Ethanol retention checks may be performed instead of methanol retention checks. Alcohol retentions may be omitted if no alcohol-fueled vehicles will be tested in the evaporative enclosure. Alternate calibration methods may be used if shown to yield equivalent or superior results, and if approved in advance by the Administrator; specifically, more extreme temperatures may be used for determining calibration without affecting the validity of test results.

* * * * *

(c) * * *

(1) * * *

(vii) Inject into the enclosure 0.5 to 1.0 grams of pure methanol at a recommended temperature of at least 150 °F (65 °C) and/or 0.5 to 1.0 grams of pure propane at lab ambient temperature. The injected quantity may be measured by volume flow or by mass measurement. The method used to measure the quantity of methanol and propane must have an accuracy of ±0.5 percent of the measured value (less accurate methods may be used with the advance approval of the Administrator).

* * * * *

(ix) To verify the enclosure calibration, calculate the mass of propane and the mass of methanol using the measurements taken in paragraphs (c)(1)(vi) and (viii) of this section. See paragraph (d) of this section. This quantity must be within ±5 percent of that measured in paragraph (c)(1)(vii) of this section. Evaluate long-term trends using good engineering judgment to minimize measurement bias. Keep records to document such evaluations and make them available to EPA upon request.

* * * * *

§§ 86.118–78, 86.127–96, and 86.128–00 [Removed]

■ 102. Sections 86.118–78, 86.127–96, and 86.128–00 are removed.

■ 103. Section 86.128–79 is amended by revising paragraph (d) to read as follows:

§ 86.128–79 Transmissions.

* * * * *

(d) The vehicle shall be driven with appropriate accelerator pedal movement necessary to achieve the speed versus time relationship prescribed by the driving schedule. Both smoothing of speed variations and excessive accelerator pedal perturbations are to be avoided.

* * * * *

§ 86.129–80 [Amended]

■ 104. Section 86.129–80 is amended by removing and reserving paragraph (a).

§ 86.130–00 [Removed]

■ 105. Section 86.130–00 is removed.

■ 106. Section 86.130–96 is amended by adding introductory text, revising paragraph (e), and adding paragraph (f) to read as follows:

§ 86.130–96 Test sequence; general requirements.

Paragraphs (a) through (d) of this section are applicable to vehicles tested for the FTP test. Paragraph (e) of this section is applicable to vehicles tested for the SFTP supplemental tests of air conditioning (SC03) and aggressive driving (US06). Paragraph (f) of this section is applicable to all emission testing.

* * * * *

(e) The supplemental tests for exhaust emissions related to aggressive driving (US06) and air conditioning (SC03) use are conducted as stand-alone tests as described in §§ 86.158 through 86.160. These tests may be performed in any sequence that maintains the appropriate preconditioning requirements as specified in § 86.132.

(f) If tests are invalidated after collection of emission data from previous test segments, the test may be repeated to collect only those data points needed to complete emission

measurements. Compliance with emission standards may be determined by combining emission measurements from different test runs. If any emission measurements are repeated, the new measurements supersede previous values.

§ 86.131–00 [Removed]

■ 107. Section 86.131–00 is removed.

■ 108. Section 86.131–96 is amended by adding paragraphs (f) and (g) to read as follows:

§ 86.131–96 Vehicle preparation.

* * * * *

(f) For vehicles to be tested for aggressive driving emissions (US06), provide a throttle position sensing signal that is compatible with the test dynamometer. This signal provides the input information that controls dynamometer dynamic inertia weight adjustments (see §§ 86.108–00(b)(2)(ii) and 86.129–00(f)(2)). If a manufacturer chooses not to implement dynamic inertia adjustments for a portion or all of their product line, this requirement is not applicable.

(g) You may disable any AECDs that have been approved solely for emergency vehicle applications under paragraph (4) of the definition of defeat device in § 86.1803. The emission standards do not apply when any of these AECDs are active.

§ 86.132–96 [Amended]

■ 109. Section 86.132–96 is amended by removing and reserving paragraph (k).

■ 110. Section 86.133–96 is amended by adding paragraph (a)(4) to read as follows:

§ 86.133–96 Diurnal emission test.

(a) * * *

(4) Manufacturers may use a pressurized fuel system if they demonstrate that fuel vapor would not be vented to the atmosphere if there is a leak in the fuel system or if the fuel cap is removed. Without this demonstration, tank pressure must not exceed 10 inches of water during the diurnal emission test.

* * * * *

■ 111. Section 86.134–96 is amended by revising paragraph (g)(1)(xvi) and adding paragraph (g)(4) to read as follows:

§ 86.134–96 Running loss test.

* * * * *

(g) * * *

(1) * * *

(xvi) Manufacturers may use a pressurized fuel system if they demonstrate that fuel vapor would not be vented to the atmosphere if there is a leak in the fuel system or if the fuel cap is removed. Without this demonstration, tank pressure must not exceed 10 inches of water during the running loss test, except that temporary exceedances are allowed for vehicles whose tank pressure remained below 10 inches of water during the entire outdoor driving period specified in § 86.129. These temporary pressure exceedances may not occur for more than 10 percent of the total driving time.

* * * * *

(4) *High-altitude testing.* For testing under high-altitude conditions, decrease the target ambient and fuel temperatures by 5 °F. For example, the fuel temperature profile should be adjusted downward based on a nominal starting temperature of 90 °F, and the nominal temperature in the enclosure should be 90 °F.

* * * * *

§ 86.135–00 [Removed]

■ 112. Section 86.135–00 is removed.

■ 113. Section 86.135–90 is amended by revising paragraphs (a) and (d) to read as follows:

§ 86.135–90 Dynamometer procedure.

(a) The dynamometer run consists of two tests—a ''cold'' start test, after a minimum 12-hour and a maximum 36-hour soak according to the provisions of §§ 86.132 and 86.133, and a ''hot'' start test following the ''cold'' start by 10 minutes. Engine startup (with all accessories turned off), operation over the UDDS and engine shutdown make a complete cold start test. Engine startup and operation over the first 505 seconds of the driving schedule complete the hot start test. The exhaust emissions are diluted with ambient air in the dilution tunnel as shown in Figure B94–5 and Figure B94–6. A dilution tunnel is not required for testing vehicles waived from the requirement to measure particulate matter. Six particulate samples are collected on filters for weighing; the first sample plus backup is collected during the first 505 seconds of the cold start test; the second sample plus backup is collected during the remainder of the cold start test (including shutdown); the third sample plus backup is collected during the hot start test. Continuous or batch proportional samples of gaseous emissions are collected for analysis during each test phase. Use the following measurement procedures for each type of engine:

(1) For gasoline-fueled, natural gas-fueled and liquefied petroleum gas-fueled Otto-cycle vehicles, the composite samples collected in bags are analyzed for THC, CO, CO_2, CH_4, and NO_X.

(2) For petroleum-fueled diesel-cycle vehicles (optional for natural gas-fueled, liquefied petroleum gas-fueled and methanol-fueled diesel-cycle vehicles), THC is sampled and analyzed continuously according to the provisions of § 86.110. Parallel samples of the dilution air are similarly analyzed for THC, CO, CO_2, CH_4, and NO_X.

(3) For natural gas-fueled, liquefied petroleum gas-fueled and methanol-fueled vehicles, bag samples are collected and analyzed for THC (if not sampled continuously), CO, CO_2, CH_4, and NO_X.

(4) For methanol-fueled vehicles, methanol and formaldehyde samples are taken for both exhaust emissions and dilution air (a single dilution air formaldehyde sample, covering the total test period may be collected). Parallel bag samples of dilution air are analyzed for THC, CO, CO_2, CH_4, and NO_X.

* * * * *

(d) Practice runs over the prescribed driving schedule may be performed at test point, provided an emission sample is not taken, for the purpose of finding the appropriate throttle action to maintain the proper speed-time relationship, or to permit sampling system adjustment. Both smoothing of speed variations and excessive accelerator pedal perturbations are to be avoided. When using two-roll dynamometers a truer speed-time trace may be obtained by minimizing the rocking of the vehicle in the rolls; the rocking of the vehicle changes the tire rolling radius on each roll. This rocking may be minimized by restraining the vehicle horizontally (or nearly so) by using a cable and winch.

* * * * *

§ 86.135–94 and 86.137–90 [Removed]

■ 114. Sections 86.135–94 and 86.137–90 are removed.

■ 115. Section 86.137–94 is amended by revising paragraphs (b)(16) through (b)(24) to read as follows:

§ 86.137–94 Dynamometer test run, gaseous and particulate emissions.

* * * * *

(b) * * *

(16) Immediately after the end of the sample period, turn off the cooling fan and close the engine compartment cover.

(17) Turn off the CVS or disconnect the exhaust tube from the tailpipe(s) of the vehicle.

(18) Repeat the steps in paragraphs (b)(2) through (b)(12) of this section for the hot start test, except only two evacuated sample bags, two methanol

sample impingers, two formaldehyde sample impingers, and one pair of particulate sample filters, as appropriate, are required. The step in paragraph (b)(9) of this section shall begin between 9 and 11 minutes after the end of the sample period for the cold start test.

(19) At the end of the deceleration scheduled to occur at 505 seconds, simultaneously turn off gas flow measuring device No. 1 (and the petroleum-fueled diesel hydrocarbon integrator No. 1; mark the petroleum-fueled diesel hydrocarbon recorder chart and turn off the No. 1 particulate sample pump, if applicable) and position the sample selector valve to the ''standby'' position. (Engine shutdown is not part of the hot start test sample period.) Record the measured roll or shaft revolutions (and the No. 1 gas meter reading or flow measurement instrument). Carefully remove the third pair of particulate sample filters from the holder and place in a clean petri dish and cover, if applicable.

(20) As soon as possible, transfer the hot start ''transient'' exhaust and dilution air samples to the analytical system and process the samples according to § 86.140, obtaining a stabilized reading of the exhaust bag sample on all analyzers within 20 minutes of the end of the sample collection phase of the test. Obtain methanol and formaldehyde sample analyses, if applicable, within 24 hours of the end of the sample period. If it is not possible to perform analysis on the methanol and formaldehyde samples within 24 hours, the samples should be stored in a dark, cold (4–10 °C) environment until analysis. Analyze the samples within fourteen days.

(21) As soon as possible, and in no case longer than one hour after the end of the hot start phase of the test, transfer the six particulate filters to the weighing chamber for post-test conditioning, if applicable.

(22) Disconnect the exhaust tube from the vehicle tailpipe(s) and drive the vehicle from dynamometer.

(23) The CVS or CFV may be turned off, if desired.

(24) Vehicles to be tested for evaporative emissions proceed according to § 86.134; vehicles to be tested with the supplemental two-diurnal test sequence for evaporative emissions proceed according to § 86.138–96(k). For all others, this completes the test sequence.

§ 86.137–96 [Removed]

■ 116. Section 86.137–96 is removed.

■ 117. Section 86.142–90 is amended by revising paragraph (d) to read as follows:

§ 86.142–90 Records required.

* * * * *

(d) Test results. Also include a comparison of drive cycle energy and target cycle energy relative to both inertia and road load forces as specified in 40 CFR 1066.430 for each drive cycle or test phase, as appropriate.

* * * * *

■ 118. Section 86.143–96 is amended by revising paragraph (c) to read as follows:

§ 86.143–96 Calculations; evaporative emissions.

* * * * *

(c) If the test fuel contains at least 25% oxygenated compounds by volume, use the following equation to calculate a hydrocarbon equivalent mass for comparing to the standard:

$$M_{\mathrm{THCE}} = m_{\mathrm{HC}} + \sum \frac{14.3 \cdot n_i}{MW_{\mathrm{i}}}$$

Where:

M_{THCE} = the C_1-equivalent sum of the concentration of carbon mass contributions of non-oxygenated hydrocarbons, alcohols, and aldehydes.

m_{HC} = the mass contribution from nonoxygenated hydrocarbons.

n_{i} = the number of carbon atoms in the molecular representation of the oxygenated emission component *i*. For example, for methanol (CH_3OH), n = 1 and for ethanol (C_2H_5OH), n = 2.

MW_{i} = the molecular weight of the oxygenated emission component *i*, as described in 40 CFR 1065.1005.

* * * * *

§§ 86.162–00 and 86.167–17 [Removed]

■ 119. Sections 86.162–00 and 86.167–17 are removed.

■ 120 . Subpart C is revised to consist of §§ 86.201 and 86.213 to read as follows:

Subpart C—Emission Regulations for 1994 and Later Model Year Gasoline-Fueled New Light-Duty Vehicles, New Light-Duty Trucks and New Medium-Duty Passenger Vehicles; Cold Temperature Test Procedures

Sec.
86.201 General applicability.
86.213 Fuel specifications.

Subpart C—Emission Regulations for 1994 and Later Model Year Gasoline-Fueled New Light-Duty Vehicles, New Light-Duty Trucks and New Medium-Duty Passenger Vehicles; Cold Temperature Test Procedures

§ 86.201 General applicability.

(a) Vehicles are subject to cold-testing requirements as described in subpart S of this part and 40 CFR part 600. Perform testing to measure CO and NMHC emissions and determine fuel economy as described in 40 CFR part 1066; see especially 40 CFR 1066.710.

(b) Manufacturers may certify vehicles using carryover data based on previously published cold-testing procedures. In addition, we may approve the use of previously published cold-testing procedures as an alternative procedure under 40 CFR 1066.10(c).

(c) Section 86.213 describes special provisions related to test fuel specifications.

§ 86.213 Fuel specifications.

(a) *Gasoline.* Use a gasoline test fuel with ethanol (low-level blend only) or without ethanol as follows:

(1) You must certify using service accumulation fuel and E15 test fuel as specified in § 86.113 for any vehicles required to use an ethanol-blend test fuel for measuring exhaust emissions. You may use this test fuel any time earlier than we specify.

(2) You may use the test fuel specified in this paragraph (a)(2) for vehicles that are not yet subject to exhaust testing with an ethanol-blend test fuel under § 86.113. Manufacturers may certify based on this fuel using carryover data until testing with the ethanol-blend test fuel is required. The following specifications apply for gasoline test fuel without ethanol:

TABLE 1 OF § 86.213–COLD TEMPERATURE TEST FUEL SPECIFICATIONS FOR GASOLINE WITHOUT ETHANOL

Item	Regular	Premium [1]	Reference procedure [2]
(RON+MON)/2 [3]	87.8±0.3	92.3±0.5	ASTM D2699.
Sensitivity[3]	7.5	7.5.	
Distillation Range (°F)			ASTM D86
Evaporated initial boiling point	76–96	76–96.	
10% evaporated	98–118	105–125.	

TABLE 1 OF § 86.213–COLD TEMPERATURE TEST FUEL SPECIFICATIONS FOR GASOLINE WITHOUT ETHANOL—Continued

Item	Regular	Premium [1]	Reference procedure [2]
50% evaporated	179–214	195–225.	
90% evaporated	316–346	316–346.	
Evaporated final boiling point	413 Maximum	413 Maximum.	
Hydrocarbon composition (vol %)			ASTM D1319.
Olefins	12.5±0.5	10.5±0.5.	
Aromatics	26.4±4.0	32.0±4.0.	
Saturates	Remainder	Remainder.	
Lead, g/gallon	0.01, Maximum	0.01, Maximum	ASTM D3237.
Phosphorous, g/gallon	0.005 Maximum	0.005 Maximum	ASTM D3231.
Total sulfur, wt. %	0.0015–0.008	0.0015–0.008 [4]	ASTM D3120.
RVP, psi	11.5±0.3	11.5±0.3	ASTM D4953.

[1] The premium fuel specifications apply for vehicles designed to use high-octane premium fuel.
[2] ASTM procedures are incorporated by reference in § 86.1.
[3] Octane specifications are optional for manufacturer testing.
[4] Sulfur concentration will not exceed 0.0045 weight percent for EPA testing.

(3) Manufacturers may use the E0 gasoline test fuel specified in § 86.113 for certification instead of the fuel specified in paragraph (a)(2) of this section, as long as the change in test fuel does not cause cold NMHC, CO, or CO_2 emissions to decrease; manufacturers must keep records documenting these emission effects and make them available to EPA upon request.

(4) We may approve alternate fuel specifications that are substantially equivalent to those in paragraph (a)(2) of this section for a manufacturer's testing.

(b) *Diesel fuel.* Diesel fuel for testing under this subpart must meet the specifications for low-temperature test fuel in 40 CFR 1065.703.

Subpart D—[Removed and reserved]

■ 121. Subpart D, consisting of §§ 86.301–79 through 86.348–79, is removed and resereved.

Subpart F—[Amended]

§ 86.505–78—[Removed]

■ 122. Remove § 86.505–78.

§ 86.513–94—[Amended]

■ 123. Section 86.513–94 is amended by removing and reserving paragraph (a) and by removing and reserving paragraphs (e) and (f).

■ 124. Section 86.515–78 is amended by revising paragraphs (a) and (d) to read as follows:

§ 86.515–78 EPA urban dynamometer driving schedule.

(a) The dynamometer driving schedules are listed in appendix I. The driving schedules are defined by a smooth trace drawn through the specified speed vs. time relationships. They consist of a nonrepetitive series of idle, acceleration, cruise, and deceleration modes of various time sequences and rates. Appropriate driving schedules are as follows:

(1) Class I—Appendix I(b).

(2) Class II—Appendix I(a)(2).

(3) Class III—Appendix I(a)(2).

* * * * *

(d) For motorcycles with an engine displacement less than 50 cc and a top speed less than 58.7 km/hr (36.5 mph), the speed indicated for each second of operation on the applicable Class I driving trace (speed versus time sequence) specified in appendix I(b) shall be adjusted downward by the ratio of actual top speed to specified maximum test speed. Calculate the ratio with three significant figures by dividing the top speed of the motorcycle in km/hr by 58.7. For example, for a motorcycle with a top speed of 48.3 km/hr (30 mph), the ratio would be 48.3/58.7 = 0.823. The top speed to be used under this section shall be indicated in the manufacturer's application for certification, and shall be the highest sustainable speed of the motorcycle with an 80 kg rider on a flat paved surface. If the motorcycle is equipped with a permanent speed governor that is unlikely to be removed in actual use, measure the top speed in the governed configuration; otherwise measure the top speed in the ungoverned configuration.

Subpart G—[Amended]

■ 125. Section 86.608–98 is amended by revising paragraph (a) to read as follows:

§ 86.608–98 Test procedures.

(a) The prescribed test procedures are the Federal Test Procedure, as described in subpart B of this part, and the cold temperature CO test procedure as described in subpart C of this part. For purposes of Selective Enforcement Audit testing, the manufacturer shall not be required to perform any of the test procedures in subpart B of this part relating to evaporative emission testing, other than refueling emissions testing, except as specified in paragraph (a)(2) of this section.

(1) The Administrator may omit any of the testing procedures described in paragraph (a) of this section. Further, the Administrator may, on the basis of a written application by a manufacturer, approve optional test procedures other than those in subparts B and C of this part for any motor vehicle which is not susceptible to satisfactory testing using the procedures in subparts B and C of this part.

(2) The following exceptions to the test procedures in subpart B of this part are applicable to Selective Enforcement Audit testing:

(i) For mileage accumulation, the manufacturer may use test fuel meeting the specifications for mileage and service accumulation fuels of § 86.113. Otherwise, the manufacturer may use fuels other than those specified in this section only with the advance approval of the Administrator.

(ii) The manufacturer may measure the temperature of the test fuel at other than the approximate mid-volume of the fuel tank, as specified in § 86.131–96(a) with only a single temperature sensor, and may drain the test fuel from other than the lowest point of the tank, as

specified in §§ 86.131–96(b) and 86.152–98(a), provided an equivalent method is used. Equivalency documentation shall be maintained by the manufacturers and shall be made available to the Administrator upon request. Additionally, for any test vehicle that has remained under laboratory ambient temperature conditions for at least 6 hours prior to testing, the vehicle soak described in § 86.132–96(c) may be eliminated upon approval of the Administrator. In such cases, the vehicle shall be operated through the preconditioning drive described in § 86.132–96(c) immediately following the fuel drain and fill procedure described in § 86.132–96(b).

(iii) The manufacturer may perform additional preconditioning on Selective Enforcement Audit test vehicles other than the preconditioning specified in § 86.132 only if the additional preconditioning was performed on certification test vehicles of the same configuration.

(iv) [Reserved]

(v) The manufacturer may substitute slave tires for the drive wheel tires on the vehicle as specified in § 86.135–90(e): Provided, that the slave tires are the same size.

(vi) [Reserved]

(vii) In performing exhaust sample analysis under § 86.140–94.

(A) When testing diesel vehicles, or methanol-fueled Otto-cycle vehicles, the manufacturer shall allow a minimum of 20 minutes warm-up for the HC analyzer, and for diesel vehicles, a minimum of two hours warm-up for the CO, CO2. and NOx analyzers. (Power is normally left on infrared and chemiluminescent analyzers. When not in use, the chopper motors of the infrared analyzers are turned off and the phototube high voltage supply to the chemiluminescent analyzers is placed in the standby position.)

(B) The manufacturer shall exercise care to prevent moisture from condensing in the sample collection bags.

(viii) The manufacturer need not comply with § 86.142 or § 86.155, since the records required therein are provided under other provisions of this subpart G.

(ix) If a manufacturer elects to perform the background determination procedure described in paragraph (a)(2)(xi) of this section in addition to performing the refueling emissions test procedure, the elapsed time between the initial and final FID readings shall be recorded, rounded to the nearest second rather than minute as described in § 86.154–98(e)(8). In addition, the vehicle soak described in § 86.153–98(e) shall be conducted with the windows and luggage compartment of the vehicle open.

(x) The Administrator may elect to perform a seal test, described in § 86.153–98(b), of both integrated and non-integrated systems instead of the full refueling test. When testing non-integrated systems, a manufacturer may conduct the canister purge described in § 86.153–98(b)(1) directly following the preconditioning drive described in § 86.132–96(e) or directly following the exhaust emissions test described in § 86.137–96.

(xi) In addition to the refueling test, a manufacturer may elect to perform the following background emissions determination immediately prior to the refueling measurement procedure described in § 86.154, provided EPA is notified of this decision prior to the start of testing in an SEA.

(A) The SHED shall be purged for several minutes immediately prior to the background determination. Warning: If at any time the concentration of hydrocarbons, of methanol, or of methanol and hydrocarbons exceeds 15,000 ppm C, the enclosure should be immediately purged. This concentration provides a 4:1 safety factor against the lean flammability limit.

(B) The FID (or HFID) hydrocarbon analyzer shall be zeroed and spanned immediately prior to the background determination. If not already on, the enclosure mixing fan and the spilled fuel mixing blower shall be turned on at this time.

(C) Place the vehicle in the SHED. The ambient temperature level encountered by the test vehicle during the entire background emissions determination shall be 80 °F ±3 °F. The windows and luggage compartment of the vehicle must be open and the gas cap must be secured.

(D) Seal the SHED. Immediately analyze the ambient concentration of hydrocarbons in the SHED and record. This is the initial background hydrocarbon concentration.

(E) Soak the vehicle for ten minutes ±1 minute.

(F) The FID (or HFID) hydrocarbon analyzer shall be zeroed and spanned immediately prior to the end of the background determination.

(G) Analyze the ambient concentration of hydrocarbons in the SHED and record. This is the final background hydrocarbon concentration.

(H) The total hydrocarbon mass emitted during the background determination is calculated according to § 86.156. To obtain a per-minute background emission rate, divide the total hydrocarbon mass calculated in this paragraph by the duration of the soak, rounded to the nearest second, described in paragraph (a)(2)(xi)(G) of this section.

(I) The background emission rate is multiplied by the duration of the refueling measurement obtained in paragraph (a)(2)(ix) of this section. This number is then subtracted from the total grams of emissions calculated for the refueling test according to § 86.156–98(a) to obtain the adjusted value for total refueling emissions. The final results for comparison with the refueling emission standard shall be computed by dividing the adjusted value for total refueling mass emissions by the total gallons of fuel dispensed in the refueling test as described in § 86.156–98(b).

(xii) In addition to the requirements of subpart B of this part, the manufacturer shall prepare gasoline-fueled and methanol-fueled vehicles as follows prior to emission testing:

(A) The manufacturer shall inspect the fuel system to ensure the absence of any leaks of liquid or vapor to the atmosphere by applying a pressure of 14.5±0.5 inches of water (3.6±0.1 kPa) to the fuel system, allowing the pressure to stabilize, and isolating the fuel system from the pressure source. Following isolation of the fuel system, pressure must not drop more than 2.0 inches of water (0.5 kPa) in five minutes. If required, the manufacturer shall perform corrective action in accordance with paragraph (d) of this section and report this action in accordance with § 86.609–98(d).

(B) When performing this pressure check, the manufacturer shall exercise care to neither purge nor load the evaporative or refueling emission control systems.

(C) The manufacturer may not modify the test vehicle's evaporative or refueling emission control systems by component addition, deletion, or substitution, except to comply with paragraph (a)(2)(ii) of this section if approved in advance by the Administrator.

(3) The following exceptions to the test procedures in subpart C of this part are applicable to Selective Enforcement Audit testing:

(i) The manufacturer may measure the temperature of the test fuel at other than the approximate mid-volume of the fuel tank, as specified in § 86.107–96(e), and may drain the test fuel from other than the lowest point of the fuel tank, provided an equivalent method is used. Equivalency documentation shall be maintained by the manufacturer and shall be made available to the Administrator upon request.

(ii) In performing exhaust sample analysis under § 86.140, the manufacturer shall exercise care to prevent moisture from condensing in the sample collection bags.

(iii) The manufacturer need not comply with § 86.142 since the records required therein are provided under other provisions of this subpart G.

(iv) In addition to the requirements of subpart C of this part, the manufacturer shall prepare gasoline-fueled vehicles as follows prior to exhaust emission testing:

(A) The manufacturer shall inspect the fuel system to ensure the absence of any leaks of liquid or vapor to the atmosphere by applying a pressure of 14.5±0.5 inches of water (3.6±0.1 kPa) to the fuel system allowing the pressure to stabilize and isolating the fuel system from the pressure source. Following isolation of the fuel system, pressure must not drop more than 2.0 inches of water (0.5 kPa) in five minutes. If required, the manufacturer shall perform corrective action in accordance with paragraph (d) of this section and report this action in accordance with § 86.609–98(d).

(B) When performing this pressure check, the manufacturer shall exercise care to neither purge nor load the evaporative or refueling emission control system.

(C) The manufacturer shall not modify the test vehicle's evaporative or refueling emission control system by component addition, deletion, or substitution, except if approved in advance by the Administrator, to comply with paragraph (a)(3)(i) of this section.

* * * * *

■ 126. Section 86.609–98 is amended by revising paragraphs (a), (b), and (c) to read as follows:

§ 86.609–98 Calculation and reporting of test results.

(a) Initial test results are calculated following the test procedures specified in § 86.608–98(a). Round the initial test results to the number of decimal places contained in the applicable emission standard expressed to one additional significant figure.

(b) Final test results for each test vehicle are calculated by summing the initial test results derived in paragraph (a) of this section for each test vehicle, dividing by the number of times that specific test has been conducted on the vehicle, and rounding to the same number of decimal places contained in the applicable standard expressed to one additional significant figure.

(c) *Final deteriorated test results*—(1) *For each test vehicle.* The final deteriorated test results for each light-duty vehicle tested for exhaust emissions and/or refueling emissions according to subpart B, subpart C, or subpart R of this part are calculated by first multiplying or adding, as appropriate, the final test results by or to the appropriate deterioration factor derived from the certification process for the engine or evaporative/refueling family and model year to which the selected configuration belongs, and then by multiplying by the appropriate reactivity adjustment factor, if applicable, and rounding to the same number of decimal places contained in the applicable emission standard. For the purpose of this paragraph (c), if a multiplicative deterioration factor as computed during the certification process is less than one, that deterioration factor is one. If an additive deterioration factor as computed during the certification process is less than zero, that deterioration factor will be zero.

(2) *Exceptions.* There are no deterioration factors for light-duty vehicle emissions obtained during spitback testing in accordance with § 86.146–96. Accordingly, for the fuel dispensing spitback test, the term ''final deteriorated test results'' means the final test results derived in paragraph (b) of this section for each test vehicle, rounded to the same number of decimal places contained in the applicable emission standard.

* * * * *

§ 86.610–98 [Amended]

■ 127. Section 86.610–98 is amended by removing and reserving paragraph (c)(2).

■ 128. Section 86.612–97 is revised to read as follows:

§ 86.612–97 Suspension and revocation of certificates of conformity.

(a) The certificate of conformity is immediately suspended with respect to any vehicle failing pursuant to § 86.610–98 (b) effective from the time that testing of that vehicle is completed.

(b) The Administrator may suspend the certificate of conformity for a configuration that does not pass a selective enforcement audit pursuant to § 86.610–98(c) based on the first test, or all tests, conducted on each vehicle. This suspension will not occur before ten days after failure to pass the audit.

(c) If the results of vehicle testing pursuant to the requirements of this subpart indicates the vehicles of a particular configuration produced at more than one plant do not conform to the regulations with respect to which the certificate of conformity was issued, the Administrator may suspend the certificate of conformity with respect to that configuration for vehicles manufactured by the manufacturer in other plants of the manufacturer.

(d) The Administrator will notify the manufacturer in writing of any suspension or revocation of a certificate of conformity in whole or in part: Except, that the certificate of conformity is immediately suspended with respect to any vehicle failing pursuant to § 86.610–98(b) and as provided for in paragraph (a) of this section.

(e) The Administrator may revoke a certificate of conformity for a configuration when the certificate has been suspended pursuant to paragraph (b) or (c) of this section if the proposed remedy for the nonconformity, as reported by the manufacturer to the Administrator, is one requiring a design change(s) to the engine and/or emission control system as described in the Application for Certification of the affected configuration.

(f) Once a certificate has been suspended for a failed vehicle as provided for in paragraph (a) of this section, the manufacturer must take the following actions:

(1) Before the certificate is reinstated for that failed vehicle—

(i) Remedy the nonconformity; and

(ii) Demonstrate that the vehicle's final deteriorated test results conform to the applicable emission standards or family particulate emission limits, as defined in this part 86 by retesting the vehicle in accordance with the requirements of this subpart.

(2) Submit a written report to the Administrator within thirty days after successful completion of testing on the failed vehicle, which contains a description of the remedy and test results for the vehicle in addition to other information that may be required by this subpart.

(g) Once a certificate has been suspended pursuant to paragraph (b) or (c) of this section, the manufacturer must take the following actions before the Administrator will consider reinstating such certificate:

(1) Submit a written report to the Administrator which identifies the reason for the noncompliance of the vehicles, describes the proposed remedy, including a description of any proposed quality control and/or quality assurance measures to be taken by the manufacturer to prevent the future occurrence of the problem, and states the date on which the remedies will be implemented.

(2) Demonstrate that the engine family or configuration for which the certificate of conformity has been suspended does in fact comply with the requirements of

this subpart by testing vehicles selected from normal production runs of that engine family or configuration at the plant(s) or the facilities specified by the Administrator, in accordance with: the conditions specified in the initial test order pursuant to § 86.603 for a configuration suspended pursuant to paragraph (b) or (c) of this section.

(3) If the Administrator has not revoked the certificate pursuant to paragraph (e) of this section and if the manufacturer elects to continue testing individual vehicles after suspension of a certificate, the certificate is reinstated for any vehicle actually determined to have its final deteriorated test results in conformance with the applicable standards through testing in accordance with the applicable test procedures.

(h) Once a certificate for a failed engine family or configuration has been revoked under paragraph (e) of this section and the manufacturer desires to introduce into commerce a modified version of that engine family or configuration, the following actions will be taken before the Administrator may issue a certificate for the new engine family or configuration:

(1) If the Administrator determines that the proposed change(s) in vehicle design may have an effect on emission performance deterioration and/or fuel economy, he/she shall notify the manufacturer within five working days after receipt of the report in paragraph (g)(1) of this section whether subsequent testing under this subpart will be sufficient to evaluate the proposed change(s) or whether additional testing will be required.

(2) After implementing the change(s) intended to remedy the nonconformity, the manufacturer shall demonstrate, if the certificate was revoked pursuant to paragraph (e) of this section, that the modified vehicle configuration does in fact conform with the requirements of this subpart by testing vehicles selected from normal production runs of that modified vehicle configuration in accordance with the conditions specified in the initial test order pursuant to § 86.603. The Administrator shall consider this testing to satisfy the testing requirements of § 86.079–32 or § 86.079–33 if the Administrator had so notified the manufacturer. If the subsequent testing results in a pass decision pursuant to the criteria in § 86.610–98(c), the Administrator shall reissue or amend the certificate, if necessary, to include that configuration: *Provided,* that the manufacturer has satisfied the testing requirements specified in paragraph (h)(1) of this section. If the subsequent audit results in a fail decision pursuant to the criteria in § 86.610–98(c), the revocation remains in effect. Any design change approvals under this subpart are limited to the modification of the configuration specified by the test order.

(i) A manufacturer may at any time subsequent to an initial suspension of a certificate of conformity with respect to a test vehicle pursuant to paragraph (a) of this section, but not later than fifteen (15) days or such other period as may be allowed by the Administrator after notification of the Administrator's decision to suspend or revoke a certificate of conformity in whole or in part pursuant to paragraph (b), (c) or (e) of this section, request that the Administrator grant such manufacturer a hearing as to whether the tests have been properly conducted or any sampling methods have been properly applied.

(j) After the Administrator suspends or revokes a certificate of conformity pursuant to this section or notifies a manufacturer of his intent to suspend, revoke or void a certificate of conformity under § 86.007–30(e) or § 86.1850, and prior to the commencement of a hearing under § 86.614, if the manufacturer demonstrates to the Administrator's satisfaction that the decision to suspend, revoke or void the certificate was based on erroneous information, the Administrator shall reinstate the certificate.

(k) To permit a manufacturer to avoid storing non-test vehicles when conducting testing of an engine family or configuration subsequent to suspension or revocation of the certificate of conformity for that engine family or configuration pursuant to paragraph (b), (c), or (e) of this section, the manufacturer may request that the Administrator conditionally reinstate the certificate for that engine family or configuration. The Administrator may reinstate the certificate subject to the condition that the manufacturer consents to recall all vehicles of that engine family or configuration produced from the time the certificate is conditionally reinstated if the engine family or configuration fails the subsequent testing and to remedy any nonconformity at no expense to the owner.

Subpart H—[Removed and reserved]

■ 129. Subpart H, consisting of §§ 86.701–94 through 86.709–99, is removed and reserved.

Subpart M—[Removed and reserved]

■ 130. Subpart M, consisting of §§ 86.1201–90 through 86.1246–96, is removed and reserved.

Subpart N—Exhaust Test Procedures for Heavy-Duty Engines

■ 131. The heading of subpart N is revised to read as set forth above.

■ 132. Section 86.1305–2010 is redesignated as § 86.1305, and newly redesignated § 86.1305 is revised to read as follows:

§ 86.1305 Introduction; structure of subpart.

(a) This subpart specifies the equipment and procedures for performing exhaust-emission tests on Otto-cycle and diesel-cycle heavy-duty engines. Subpart A of this part sets forth the emission standards and general testing requirements to comply with EPA certification procedures.

(b) Use the applicable equipment and procedures for spark-ignition or compression-ignition engines in 40 CFR part 1065 to determine whether engines meet the duty-cycle emission standards in subpart A of this part. Measure the emissions of all regulated pollutants as specified in 40 CFR part 1065. Use the duty cycles and procedures specified in §§ 86.1333, 86.1360, and 86.1362. Adjust emission results from engines using aftertreatment technology with infrequent regeneration events as described in § 86.004–28.

(c) The provisions in §§ 86.1370 and 86.1372 apply for determining whether an engine meets the applicable not-to-exceed emission standards.

(d) Measure smoke using the procedures in subpart I of this part for evaluating whether engines meet the smoke standards in subpart A of this part.

(e) Use the fuels specified in 40 CFR part 1065 to perform valid tests, as follows:

(1) For service accumulation, use the test fuel or any commercially available fuel that is representative of the fuel that in-use engines will use.

(2) For diesel-fueled engines, use the ultra low-sulfur diesel fuel specified in 40 CFR part 1065 for emission testing.

(3) For gasoline-fueled engines, use the appropriate E0 fuel specified in 40 CFR part 1065, except that the sulfur concentration must be between 0.0015 and 0.008 weight percent and research octane must be at least 93.

(f) You may use special or alternate procedures to the extent we allow them under 40 CFR 1065.10. In addition, for 2010 and earlier model year engines, you may use modified test procedures

as needed to conform to the procedures that were specified at the time of emission testing for the model year in question.

(g) This subpart applies to you as a manufacturer, and to anyone who does testing for you.

(h) For testing conducted with engines installed in vehicles, including field testing conducted to measure emissions under Not-To-Exceed test procedures, use the test procedures and equipment specified in 40 CFR part 1065, subpart J.

§§ 86.1305–90, 86.1305–2004, 86.1306–07, 86.1306–96, 86.1308–84, 86.1309–90, 86.1310–90, 86.1310–2007, 86.1311–94, 86.1312–88, 86.1312–2007, 86.1313–94, 86.1313–98, 86.1313–2004, 86.1313–2007, 86.1314–94, 86.1316–94, 86.1318–84, 86.1319–90, 86.1320–90, 86.1321–94, 86.1322–84, 86.1323–84, 86.1323–2007, 86.1324–84, 86.1325–94, 86.1326–90, 86.1327–96, 86.1327–98, 86.1330–90, and 86.1332–90 [Removed]

■ 133. Remove §§ 86.1305–90, 86.1305–2004, 86.1306–07, 86.1306–96, 86.1308–84, 86.1309–90, 86.1310–90, 86.1310–2007, 86.1311–94, 86.1312–88, 86.1312–2007, 86.1313–94, 86.1313–98, 86.1313–2004, 86.1313–2007, 86.1314–94, 86.1316–94, 86.1318–84, 86.1319–90, 86.1320–90, 86.1321–94, 86.1322–84, 86.1323–84, 86.1323–2007, 86.1324–84, 86.1325–94, 86.1326–90, 86.1327–96, 86.1327–98, 86.1330–90, and 86.1332–90.

■ 134. Section 86.1333–2010 is redesignated as § 86.1333, and newly redesignated § 86.1333 is amended by revising paragraphs (a)(1) and (d) to read as follows:

§ 86.1333 Transient test cycle generation.

(a) * * *

(1) To unnormalize rpm, use the following equations:

(i) For diesel engines:

$$Actual\ rpm = \frac{\%rpm \cdot (Max\ Test\ Speed - Curb\ Idle\ Speed)}{112} + Curb\ Idle\ Speed$$

Where:

Max Test Speed = the maximum test speed as calculated in 40 CFR part 1065.

(ii) For Otto-cycle engines:

$$Actual\ rpm = \frac{\%rpm \cdot (Max\ Test\ Speed - Curb\ Idle\ Speed)}{100} + Curb\ Idle\ Speed$$

Where:

Max Test Speed = the maximum test speed as calculated in 40 CFR part 1065.

* * * * *

(d) Determine idle speeds as specified in 40 CFR 1065.510.

§§ 86.1333–90, 86.1334–84, 86.1335–90, 86.1336–84, 86.1337–96, 86.1337–2007, 86.1338–84, 86.1338–2007, 86.1339–90, 86.1340–90, 86.1340–94, 86.1341–90, 86.1341–98, 86.1342–90, 86.1342–94, 86.1343–88, and 86.1344–94 [Removed]

■ 135. Remove §§ 86.1333–90, 86.1334–84, 86.1335–90, 86.1336–84, 86.1337–96, 86.1337–2007, 86.1338–84, 86.1338–2007, 86.1339–90, 86.1340–90, 86.1340–94, 86.1341–90, 86.1341–98, 86.1342–90, 86.1342–94, 86.1343–88, and 86.1344–94.

■ 136. Section 86.1360–2007 is redesignated as § 86.1360, and newly redesignated § 86.1360 is amended by revising paragraphs (b)(1), (c), and (f)(3) to read as follows:

§ 86.1360 Supplemental emission test; test cycle and procedures.

* * * * *

(b) * * *

(1) Perform testing as described in § 86.1362 for determining whether an engine meets the applicable standards when measured over the supplemental emission test.

* * * * *

(c) The engine speeds A, B and C, referenced in the table in paragraph (b)(1) of this section, must be determined as follows:

Speed A = $n_{lo} + 0.25 \times (n_{hi} - n_{lo})$

Speed B = $n_{lo} + 0.50 \times (n_{hi} - n_{lo})$

Speed C = $n_{lo} + 0.75 \times (n_{hi} - n_{lo})$

Where:

n_{hi} = High speed as determined by calculating 70% of the maximum power. The highest engine speed where this power value occurs on the power curve is defined as n_{hi}.

n_{lo} = Low speed as determined by calculating 50% of the maximum power. The lowest engine speed where this power value occurs on the power curve is defined as n_{lo}. Maximum power = the maximum observed power calculated according to the engine mapping procedures defined in 40 CFR 1065.510.

* * * * *

(f) * * *

(3) If the Maximum Allowable Emission Limit for any point, as calculated under paragraphs (f)(1) and (2) of this section, is greater than the applicable Not-to-Exceed limit (if within the Not-to-Exceed control area defined in § 86.1370(b)), then the Maximum Allowable Emission Limit for that point shall be defined as the applicable Not-to-Exceed limit.

* * * * *

■ 137. Section 86.1362–2010 is redesignated as § 86.1362, and newly redesignated § 86.1362 is amended by revising the introductory text and adding paragraph (f) to read as follows:

§ 86.1362 Steady-state testing with a ramped-modal cycle.

This section describes how to test engines under steady-state conditions.

* * * * *

(f) For 2007 through 2010 model years, manufacturers may follow the mode order described in this paragraph (f) instead of the mode order specified in paragraph (a) of this section. Any EPA testing with these engines will rely on the same procedure used by the manufacturer for certification.

RMC mode	Time in mode (seconds)	Engine speed [1 2]	Torque (percent) [2 3]
1a Steady-state	170	Warm Idle	0.
1b Transition	20	Linear Transition	Linear Transition.
2a Steady-state	170	A	100.

RMC mode	Time in mode (seconds)	Engine speed [1 2]	Torque (percent) [2 3]
2b Transition	20	A	Linear Transition.
3a Steady-state	102	A	25.
3b Transition	20	A	Linear Transition.
4a Steady-state	100	A	75.
4b Transition	20	A	Linear Transition.
5a Steady-state	103	A	50.
5b Transition	20	Linear Transition	Linear Transition.
6a Steady-state	194	B	100.
6b Transition	20	B	Linear Transition.
7a Steady-state	219	B	25.
7b Transition	20	B	Linear Transition.
8a Steady-state	220	B	75.
8b Transition	20	B	Linear Transition.
9a Steady-state	219	B	50.
9b Transition	20	Linear Transition	Linear Transition.
10a Steady-state	171	C	100.
10b Transition	20	C	Linear Transition.
11a Steady-state	102	C	25.
11b Transition	20	C	Linear Transition.
12a Steady-state	100	C	75.
12b Transition	20	C	Linear Transition.
13a Steady-state	102	C	50.
13b Transition	20	Linear Transition	Linear Transition.
14 Steady-state	168	Warm Idle	0.

[1] Speed terms are defined in 40 CFR part 1065.
[2] Advance from one mode to the next within a 20-second transition phase. During the transition phase, command a linear progression from the speed or torque setting of the current mode to the speed or torque setting of the next mode.
[3] The percent torque is relative to maximum torque at the commanded engine speed.

§§ 86.1362–2007 and 86.1363–2007 [Removed]

■ 138. Remove §§ 86.1362–2007 and 86.1363–2007.

■ 139. Section 86.1370–2007 is redesignated as § 86.1370, and newly redesignated § 86.1370 is amended by revising paragraphs (a), (b)(3), (b)(6), and (f) introductory text to read as follows:

§ 86.1370 Not-To-Exceed test procedures.

(a) *General.* The purpose of this test procedure is to measure in-use emissions of heavy-duty diesel engines while operating within a broad range of speed and load points (the Not-To-Exceed Control Area) and under conditions which can reasonably be expected to be encountered in normal vehicle operation and use. Emission results from this test procedure are to be compared to the Not-To-Exceed Limits specified in § 86.007–11(a)(4), or to later Not-To-Exceed Limits. The Not-To-Exceed Limits do not apply for engine-starting conditions. Tests conducted using the procedures specified in this subpart are considered valid Not-To-Exceed tests (Note: duty cycles and limits on ambient conditions do not apply for Not-To-Exceed tests).

(b) * * *

(3) Notwithstanding the provisions of paragraphs (b)(1) and (2) of this section, all operating speed and load points with brake specific fuel consumption (BSFC) values within 5% of the minimum BSFC value of the engine. For the purposes of this requirement, BFSC must be calculated under the general test cell conditions specified in 40 CFR part 1065. The manufacturer may petition the Administrator at certification to exclude such points if the manufacturer can demonstrate that the engine is not expected to operate at such points in normal vehicle operation and use. Engines equipped with drivelines with multi-speed manual transmissions or automatic transmissions with a finite number of gears are not subject to the requirements of this paragraph (b)(3).

* * * * *

(6)(i) For petroleum-fueled diesel cycle engines, the manufacturer may identify particular engine-vehicle combinations and may petition the Administrator at certification to exclude operating points from the Not-to-Exceed Control Area defined in paragraphs (b)(1) through (5) of this section if the manufacturer can demonstrate that the engine is not capable of operating at such points when used in the specified engine-vehicle combination(s).

(ii) For diesel cycle engines that are not petroleum-fueled, the manufacturer may petition the Administrator at certification to exclude operating points from the Not-to-Exceed Control Area defined in paragraphs (b)(1) through (5) of this section if the manufacturer can demonstrate that the engine is not expected to operate at such points in normal vehicle operation and use.

* * * * *

(f) *NTE cold temperature operating exclusion.* Engines equipped with exhaust gas recirculation (EGR) whose operation within the NTE control area specified in paragraph (b) of this section when operating during cold temperature conditions as specified in paragraph (f)(1) of this section are not subject to the NTE emission limits during the specified cold temperature operation conditions.

* * * * *

§ 86.1372–2007 [Redesignated as § 86.1372]

■ 140. Section 86.1372–2007 is redesignated as § 86.1372.

§§ 86.1375–2007 and 86.1380–2004 [Removed]

■ 141. Remove §§ 86.1375–2007 and 86.1380–2004.

Subpart O—[Removed and reserved]

■ 142. Subpart O, consisting of §§ 86.1401 through 86.1442, is removed and reserved.

Subpart R—[Removed and reserved]

■ 143. Subpart R, consisting of §§ 86.1701–99 through 86.1780–99, is removed and reserved.

Subpart S—[Amended]

■ 144. Section 86.1801–12 is amended by revising paragraphs (a) through (d) and adding paragraph (e) to read as follows:

§ 86.1801–12 Applicability.

(a) *Applicability.* The provisions of this subpart apply to certain types of new vehicles as described in this paragraph (a). Where the provisions apply for a type of vehicle, they apply for vehicles powered by any fuel. In some cases, manufacturers of heavy-duty engines and vehicles can choose whether to meet the requirements of this subpart or the requirements of subpart A of this part; those provisions are therefore considered optional, but only to the extent that manufacturers comply with the other set of requirements. In cases where a provision applies only to a certain vehicle group based on its model year, vehicle class, motor fuel, engine type, or other distinguishing characteristics, the limited applicability is cited in the appropriate section. The provisions of this subpart apply to certain vehicles as follows:

(1) The provisions of this subpart apply for light-duty vehicles, and light-duty trucks,

(2) The provisions of this subpart apply for medium-duty passenger vehicles. The provisions of this subpart also apply for other complete heavy-duty vehicles at or below 14,000 pounds GVWR, except as follows:

(i) The provisions of this subpart are optional for diesel-cycle vehicles through model year 2018.

(ii) The onboard diagnostic requirements in this subpart do not apply if engines meet the onboard diagnostic requirements specified in § 86.007–17.

(iii) Greenhouse gas emission standards apply as specified in 40 CFR parts 1036 and 1037 instead of the standards specified in this subpart.

(3) The provisions of this subpart generally do not apply to incomplete heavy-duty vehicles or to complete vehicles above 14,000 pounds GVWR (see subpart A of this part and 40 CFR part 1037). However, this subpart applies to such vehicles in the following cases:

(i) Incomplete heavy-duty vehicles at or below 14,000 pounds GVWR may be optionally certified to the exhaust emission standards in this subpart that apply for complete heavy-duty vehicles.

(ii) The evaporative and refueling emission standards apply for incomplete heavy-duty vehicles at or below 14,000 pounds GVWR starting with model year 2018. Evaporative emission standards also apply for vehicles above 14,000 pounds GVWR as specified in 40 CFR part 1037.

(iii) The onboard diagnostic requirements in this subpart do not apply for vehicles above 14,000 pounds GVWR; these requirements apply for incomplete vehicles at or below 14,000 pounds GVWR only if the installed engine does not meet the onboard diagnostic requirements specified in § 86.007–17.

(b) *Relationship to subpart A of this part.* Unless specified otherwise, if heavy-duty vehicles are not subject to provisions of this subpart or if manufacturers choose not to meet optional provisions of this subpart as described in paragraph (a) of this section, the engines installed in those vehicles must meet the corresponding requirements under subpart A of this part. If a vehicle and its installed engine comply with a mix of provisions from this subpart and from subpart A of this part, the vehicle must be certified under this subpart, and the engine does not need to be certified separately.

(c) *Clean alternative fuel conversions.* The provisions of this subpart also apply to clean alternative fuel conversions as defined in 40 CFR 85.502 of all vehicles described in paragraph (a) of this section.

(d) *Small volume manufacturers.* Special certification procedures are available for small-volume manufacturers as described in § 86.1838.

(e) *You.* The term ''you'' in this subpart refers to manufacturers subject to the emission standards and other requirements of this subpart.

* * * * *

■ 145. Section 86.1803–01 is amended as follows:

■ a. By removing the definition for ''Certification Short Test (CST)''.

■ b. By adding definitions for ''Class 2b'' and ''Class 3'' in alphabetical order.

■ c. By revising the definitions for ''Family emission limit (FEL)'', ''Heavy-duty vehicle'', and ''Hybrid electric vehicle (HEV)''.

■ d. By adding definitions for ''LEV III'' and ''Low-altitude conditions'' in alphabetical order.

■ e. By removing the definition for ''Low altitude conditions''.

■ f. By adding a definition for ''Rated power'' in alphabetical order.

■ g. By revising the definition for ''Round, rounded or rounding''.

■ h. By adding definitions for ''Section 177 states'', ''Tier 3'', and ''United States'' in alphabetical order.

■ i. By revising the definition for ''U.S. sales''.

■ j. By adding definitions for ''Volatile liquid fuel'' and ''We (us, our)'' in alphabetical order.

§ 86.1803–01 Definitions.

* * * * *

Class 2b means relating to heavy-duty vehicles at or below 10,000 pounds GVWR.

Class 3 means relating to heavy-duty vehicles above 10,000 pounds GVWR and at or below 14,000 pounds GVWR.

* * * * *

Family emission limit (FEL) means a bin standard or emission level selected by the manufacturer that serves as the applicable emission standard for the vehicles in the family or test group in the context of fleet-average standards or emission credits.

* * * * *

Heavy-duty vehicle means any motor vehicle rated at more than 8,500 pounds GVWR or that has a vehicle curb weight of more than 6,000 pounds or that has a basic vehicle frontal area in excess of 45 square feet. Note that MDPVs are heavy-duty vehicles that are in many cases subject to requirements that apply for light-duty trucks.

* * * * *

Hybrid electric vehicle (HEV) means a motor vehicle which draws propulsion energy from onboard sources of stored energy that are both an internal combustion engine or heat engine using consumable fuel, and a rechargeable energy storage system such as a battery, capacitor, hydraulic accumulator, or flywheel.

* * * * *

LEV III means relating to the LEV III emission standards in Title 13, §§ 1961.2 and 1976(b)1)(G) of the California Code of Regulations, as adopted by the California Air Resources Board (incorporated by reference in § 86.1).

* * * * *

Low-altitude conditions means a test altitude less than 549 meters (1,800 feet).

* * * * *

Rated power means an engine's maximum power output in an installed configuration, as determined by using SAE J1349 (incorporated by reference in § 86.1).

* * * * *

Round, rounded or *rounding* has the meaning given in 40 CFR 1065.1001, unless otherwise specified.

* * * * *

Section 177 states means the states that have adopted California's motor vehicle standards for a particular model year under section 177 of the Clean Air Act (42 U.S.C. 7507).

* * * * *

Tier 3 means relating to the Tier 3 emission standards described in §§ 86.1811–17, 86.1813–17, and 86.1816–18.

* * * * *

United States has the meaning given in 40 CFR 1068.30.

* * * * *

U.S. sales means, unless otherwise specified, sales in any state of the United States except for California or the section 177 states. Sale location is based on the point of first sale to a dealer, distributor, fleet operator, broker, or other entity.

* * * * *

Volatile liquid fuel means any fuel other than diesel or biodiesel that is a liquid at atmospheric pressure and has a Reid Vapor Pressure higher than 2.0 pounds per square inch.

* * * * *

We (us, our) means the Administrator of the Environmental Protection Agency and any authorized representatives.

* * * * *

§ 86.1805–01 [Removed]

■ 146. Remove § 86.1805–01.

■ 147. A new § 86.1805–17 is added to subpart S to read as follows:

§ 86.1805–17 Useful life.

(a) *General provisions.* The useful life values specified in this section apply for all exhaust, evaporative, refueling, and OBD emission requirements described in this subpart, except for standards that are specified to apply only at certification. These useful life requirements also apply to all air conditioning leakage credits, air conditioning efficiency credits, and other credit programs used by the manufacturer to comply with the fleet-average CO_2 emission standards in § 86.1818. Useful life values are specified as a given number of calendar years and miles of driving, whichever comes first.

(b) *Greenhouse gas pollutants.* The emission standards in § 86.1818 apply for a useful life of 10 years or 120,000 miles for LDVs and LLDTs and 11 years or 120,000 miles for HLDTs, MDPVs, and heavy-duty vehicles. Manufacturers may alternatively certify based on a longer useful life as specified in paragraph (c) of this section.

(c) *Criteria pollutants.* The useful life provisions of this paragraph (c) apply for all emission standards not covered by paragraph (b) of this section. Except as specified in paragraph (e) of this section and in §§ 86.1811, 86.1813, and 86.1816, the useful life for LDT2s, HLDTs, MDPVs, and HDVs is 15 years or 150,000 miles. The useful life for LDV and LDT1 is 10 years or 120,000 miles. Manufacturers may optionally certify LDVs and LDT1s to a useful life of 15 years or 150,000 miles, in which case the longer useful life would apply for all the standards and requirements. LDVs and LDT1s certified to the longer useful life are subject to higher numerical FTP emission standard for NMOG+NOx as specified in § 86.1811–17(b).

(d) *Intermediate useful life.* Where exhaust emission standards are specified for an intermediate useful life, these standards apply for five years or 50,000 miles.

(e) *Interim provisions.* The useful life provisions of § 86.1805–12 apply for vehicles not yet subject to Tier 3 requirements. For example, vehicles above 6,000 pounds GVWR are not subject to the useful life provisions in this section until model year 2019 unless manufacturers voluntarily certify to the Tier 3 requirements earlier than the regulations require. Also, where the transition to Tier 3 standards involves a phase-in percentage for a given standard, vehicles not included as part of the phase-in portion of the fleet continue to be subject to the useful life provisions of § 86.1805–12 with respect to that standard.

§§ 86.1806–01 and 86.1806–04 [Removed]

■ 148. Remove §§ 86.1806–01 and 86.1806–04.

■ 149. Section 86.1806–05 is amended by revising paragraphs (b) introductory text and (j) and adding paragraph (k)(7) to read as follows:

§ 86.1806–05 On-board diagnostics for vehicles less than or equal to 14,000 pounds GVWR.

* * * * *

(b) *Malfunction descriptions.* The OBD system must detect and identify malfunctions in all monitored emission-related powertrain systems or components according to the following malfunction definitions as measured and calculated in accordance with test procedures set forth in subpart B of this part (chassis-based test procedures), excluding those test procedures defined as ''Supplemental'' test procedures in § 86.004–2 and codified in §§ 86.158, 86.159, and 86.160. For clean alternative fuel conversion manufacturers, your OBD system is expected to detect and identify malfunctions in all monitored emission-related powertrain systems or components according to the malfunction definitions described in this paragraph (b) as measured and calculated in accordance with the chassis-based test procedures set forth in subpart B of this part to the extent feasible, excluding the elements of the Supplemental FTP (see § 86.1803). However, at a minimum, systems must detect and identify malfunctions as described in paragraph (k)(7) of this section.

* * * * *

(j) *California OBDII compliance option.* Manufacturers may comply with California's OBD requirements instead of meeting the requirements of this section as follows:

(1) Through the 2006 model year, demonstration of compliance with California OBDII requirements (Title 13 California Code of Regulations § 1968.2 (13 CCR 1968.2)), as modified, approved and filed on April 21, 2003 (incorporated by reference, see § 86.1), shall satisfy the requirements of this section, except that compliance with 13 CCR 1968.2(e)(4.2.2)(C), pertaining to 0.02 inch evaporative leak detection, and 13 CCR 1968.2(d)(1.4), pertaining to tampering protection, are not required to satisfy the requirements of this section. Also, the deficiency provisions of 13 CCR 1968.2(i) do not apply. In addition, demonstration of compliance with 13 CCR 1968.2(e)(16.2.1)(C), to the extent it applies to the verification of proper alignment between the camshaft and crankshaft, applies only to vehicles equipped with variable valve timing.

(2) For 2007 through 2012 model year vehicles, demonstration of compliance with California OBD II requirements (Title 13 California Code of Regulations § 1968.2 (13 CCR 1968.2)), approved on November 9, 2007 (incorporated by reference, see § 86.1), shall satisfy the requirements of this section, except that compliance with 13 CCR 1968.2(e)(4.2.2)(C), pertaining to 0.02 inch evaporative leak detection, and 13 CCR 1968.2(d)(1.4), pertaining to tampering protection, are not required to satisfy the requirements of this section. Also, the deficiency provisions of 13 CCR 1968.2(k) do not apply. In addition, demonstration of compliance with 13 CCR 1968.2(e)(15.2.1)(C), to the extent it applies to the verification of proper alignment between the camshaft and crankshaft, applies only to vehicles equipped with variable valve timing.

(3) Beginning with the 2013 model year, manufacturers may demonstrate compliance with California's 2010 OBD requirements as described in § 86.1806–17(a).

(4) For all model years, the deficiency provisions of paragraph (i) of this section and the evaporative leak detection requirement of paragraph (b)(4) of this section, if applicable, apply to manufacturers selecting this paragraph for demonstrating compliance.

(k) * * *

(7) For clean alternative fuel conversion manufacturers (e.g., natural

gas, liquefied petroleum gas, methanol, ethanol), in lieu of the requirements specified for other manufacturers in this paragraph (k), you may demonstrate that the malfunction indicator light will illuminate, at a minimum, under any of the following circumstances when the vehicle is operated on the applicable alternative fuel:

(i) *Otto-cycle.* A catalyst is replaced with a defective catalyst system where the catalyst brick for the monitored volume has been removed (i.e., empty catalyst system) resulting in an increase of 1.5 times the NMOG (or NMOG+NO_X) standard or FEL above the NMOG (or NMOG+NO_X) emission level measured using a representative 4000 mile catalyst system.

(ii)(A) *Diesel.* If monitored for emissions performance—a catalyst is replaced with a defective catalyst system where the catalyst brick for the monitored volume has been removed (i.e., empty catalyst can) resulting in exhaust emissions exceeding 1.5 times the applicable standard or FEL for NO_X (or NMOG+NO_X) or PM.

(B) If monitored for performance—a particulate trap is replaced with a trap that has catastrophically failed.

(iii)(A) *Otto-cycle.* An engine misfire condition is induced that completely disables one or more cylinders, either through mechanical or electrical means, resulting in exhaust emissions exceeding 1.5 times the applicable standards or FEL for CO, NMOG, or NO_X (or NMOG+NOx).

(B) *Diesel.* An engine misfire condition resulting in complete lack of cylinder firing is induced and is not detected.

(iv) If so equipped, any oxygen sensor is replaced with a completely defective oxygen sensor, or an electronic simulation of such, resulting in exhaust emissions exceeding 1.5 times the applicable standard or FEL for CO, NMOG, or NO_X (or NMOG+NO_X).

(v) If so equipped and applicable, a vapor leak is introduced in the evaporative and/or refueling system (excluding the tubing and connections between the purge valve and the intake manifold) greater than or equal in magnitude to a leak caused by a 0.040 inch diameter orifice, or the evaporative purge air flow is blocked or otherwise eliminated from the complete evaporative emission control system. At a minimum, gas cap removal or complete venting of the evaporative and/or refueling system may be introduced resulting in a gross leak of the complete evaporative emission control system.

(vi) A malfunction condition is induced resulting in complete disablement in any emission-related powertrain system or component, including but not necessarily limited to, the exhaust gas recirculation (EGR) system, if equipped, the secondary air system, if equipped, and the fuel control system, singularly resulting in exhaust emissions exceeding 1.5 times the applicable emission standard or FEL for PM, CO, NMOG, or NO_X (or NMOG+NOx).

(vii) A malfunction condition is induced that completely disables an electronic emission-related powertrain system or component not otherwise described in this paragraph (k) that either provides input to or receives commands from the on-board computer resulting in a measurable impact on emissions. At a minimum, manufacturers may be required to perform this disablement on critical inputs and outputs where lack of the input and output disables an entire monitor as described in this paragraph (k)(7)(vii), disables multiple monitors (e.g., two or more) used by the on-board computer, or renders the entire on-board computer and its functions inoperative.

(viii) Clean alternative fuel conversion manufacturers must use good engineering judgment to induce malfunctions and may perform more stringent malfunction demonstrations than described in this paragraph (k)(7). In addition, the Administrator reserves the right to request a clean alternative fuel conversion manufacturer to perform stricter demonstration requirements, to the extent feasible, on clean alternative fuel conversions.

* * * * *

■ 150. A new § 86.1806–17 is added to subpart S to read as follows:

§ 86.1806–17 On-board diagnostics.

Model year 2017 and later vehicles must have onboard diagnostic (OBD) systems as described in this section. OBD systems must generally detect malfunctions in the emission control system, store fault codes corresponding to detected malfunctions, and alert operators appropriately.

(a) Vehicles must comply with the 2010 OBD requirements adopted for California as described in this paragraph (a). California's 2010 OBD requirements are part of Title 13, § 1968.2 of the California Code of Regulations, approved on June 17, 2010 (incorporated by reference in § 86.1). The following clarifications and exceptions apply for vehicles certified under this subpart:

(1) For vehicles not certified in California, references to vehicles meeting certain California Air Resources Board emission standards are understood to refer to the corresponding EPA emission standards for a given family, where applicable. Use good engineering judgment to correlate the specified standards with the bin standards that apply under this subpart.

(2) Vehicles must comply with OBD requirements throughout the useful life as specified in § 86.1805. If the specified useful life is different for evaporative and exhaust emissions, the useful life specified for evaporative emissions applies for monitoring related to fuel-system leaks and the useful life specified for exhaust emissions applies for all other parameters.

(3) The purpose and applicability statements in 13 CCR 1968.2(a) and (b) do not apply.

(4) The anti-tampering provisions in 13 CCR 1968.2(d)(1.4) do not apply.

(5) The requirement to verify proper alignment between the camshaft and crankshaft described in 13 CCR 1968.2(e)(15.2.1)(C) applies only for vehicles equipped with variable valve timing.

(6) The deficiency provisions described in paragraph (c) of this section apply instead of 13 CCR 1968.2(k).

(b) The following additional provisions apply:

(1) OBD systems must record in computer memory the result of the most recent successfully completed diagnostic check for a 0.020 inch leak. The required data records include the miles driven since the last check occurred and the pass/fail result. The system may be designed to keep data only from the previous 750 miles of driving. The leak check results must be scan readable, and must be retained in system memory even if codes are cleared or the vehicle loses battery power.

(2) For every family selected for making the full OBD demonstration for certification, that demonstration must also include a test showing that the OBD system is capable of detecting an implanted 0.020 inch leak in the fuel system. Manufacturers may separately perform this test with any number of additional families. For any untested families, the statement specified in § 86.1844–01(d)(8) applies with regard to this leak monitoring requirement.

(3) For vehicles with fuel tanks exceeding 25 gallons nominal fuel tank capacity, you may request our approval for a leak threshold greater than 0.020 inches, up to a maximum value of 0.040 inches. We will generally approve a leak threshold equal to the standard that applies under § 86.1813.

(c) You may ask us to accept as compliant a vehicle that does not fully

meet specific requirements under this section. Such deficiencies are intended to allow for minor deviations from OBD standards under limited conditions. We expect vehicles to have functioning OBD systems that meet the objectives stated in this section. The following provisions apply regarding OBD system deficiencies:

(1) Except as specified in paragraph (d) of this section, we will not approve a deficiency that involves the complete lack of a major diagnostic monitor, such as monitors related to exhaust aftertreatment devices, oxygen sensors, air-fuel ratio sensors, NOx sensors, engine misfire, evaporative leaks, and diesel EGR (if applicable).

(2) We will approve a deficiency only if you show us that full compliance is infeasible or unreasonable considering any relevant factors, such as the technical feasibility of a given monitor, or the lead time and production cycles of vehicle designs and programmed computing upgrades.

(3) Our approval for a given deficiency applies only for a single model year, though you may continue to ask us to extend a deficiency approval in renewable one-year increments. We may approve an extension if you demonstrate an acceptable level of effort toward compliance and show that the necessary hardware or software modifications would pose an unreasonable burden.

(d) For alternative-fuel vehicles, manufacturers may request a waiver from specific requirements for which monitoring may not be reliable for operation with the alternative fuel. However, we will not waive requirements that we judge to be feasible for a particular manufacturer or vehicle model.

(e) For alternative-fuel conversions, manufacturers may meet the requirements of § 86.1806–05 instead of the requirements of this section.

§ 86.1807–01 [Amended]

■ 151. Section 86.1807–01 is amended by removing and reserving paragraph (a)(3)(ix).

■ 152. Section 86.1808–01 is amended as follows:

■ a. By revising paragraphs (f)(1), (f)(3) introductory text, (f)(6)(ii)(D), (f)(7)(i) introductory text, (f)(7)(ii)(B), (f)(10)(ii), (f)(13) introductory text, (f)(13)(iv), and (f)(16)(i).

■ b. By adding paragraph (g).

§ 86.1808–01 Maintenance instructions.

* * * * *

(f) * * *

(1) *Applicability.* Manufacturers are subject to the provisions of this paragraph (f) beginning in the 1996 model year for manufacturers of light-duty vehicles and light-duty trucks, and beginning in the 2005 model year for manufacturers of heavy-duty vehicles and heavy-duty engines weighing 14,000 pounds gross vehicle weight (GVW) and less that are subject to the OBD requirements of this part.

* * * * *

(3) *Information dissemination.* By December 24, 2003, each manufacturer shall provide or cause to be provided to the persons specified in paragraph (f)(2)(i) of this section and to any other interested parties a manufacturer-specific World Wide Web site containing the information specified in paragraph (f)(2)(i) of this section for 1996 and later model year vehicles which have been offered for sale; this requirement does not apply to indirect information, including the information specified in paragraphs (f)(12) through (f)(16) of this section. Upon request and approval of the Administrator, manufacturers who can demonstrate significant hardship in complying with this provision within four months after the effective date may request an additional six months lead time to meet this requirement. Each manufacturer Web site shall:

* * * * *

(6) * * *

(ii) * * *

(D) Any alternative means proposed by a manufacturer must be available to aftermarket technicians at a fair and reasonable price.

* * * * *

(7) * * *

(i) All information required to be made available by this section shall be made available at a fair and reasonable price. In determining whether a price is fair and reasonable, consideration may be given to relevant factors, including, but not limited to, the following:

* * * * *

(ii) * * *

(B) The Administrator will act on the request within 180 days following receipt of a complete request or following receipt of any additional information requested by the Administrator.

* * * * *

(10) * * *

(ii) Provide on the manufacturer's Web site an index of all emissions-related training information available for purchase by aftermarket service providers for 1994 and newer vehicles. For model years subsequent to 2003, the required information must be made available for purchase within 3 months of model introduction and then must be made available at the same time it is made available to manufacturer-franchised dealerships, whichever is earlier. The index shall describe the title of the course or instructional session, the cost of the video tape or duplicate, and information on how to order the item(s) from the manufacturer Web site. All of the items available must be shipped within 24 hours of the order being placed and are to be made available at a fair and reasonable price as described in paragraph (f)(7) of this section. Manufacturers unable to meet the 24 hour shipping requirement under circumstances where orders exceed supply and additional time is needed by the distributor to reproduce the item being ordered may exceed the 24 hour shipping requirement, but in no instance can take longer than 14 days to ship the item.

* * * * *

(13) *Generic and enhanced information for scan tools.* By September 25, 2003, manufacturers shall make available to equipment and tool companies all generic and enhanced service information including bi-directional control and data stream information as defined in paragraph (f)(2)(ii) of this section. This requirement applies for 1996 and later model year vehicles.

* * * * *

(iv) Manufacturers can satisfy the requirement of paragraph (f)(13)(iii) of this section by making available diagnostic trouble trees on their Web sites in full-text.

* * * * *

(16) * * *

(i) Manufacturers who have developed special tools to extinguish the malfunction indicator light (MIL) for Model Years 1994 through 2003 shall make available the necessary information to equipment and tool companies to design a comparable generic tool. This information shall be made available to equipment and tool companies no later than September 23, 2003.

* * * * *

(g) Through model year 2013, the manufacturer shall furnish or cause to be furnished to the purchaser the following statement for each new diesel-fueled Tier 2 vehicle (certified using a test fuel with 15 ppm sulfur or less): ''This vehicle must be operated only with ultra low sulfur diesel fuel (that is, diesel fuel meeting EPA specifications for highway diesel fuel, including a 15 ppm sulfur cap).''

§ 86.1808–07 [Removed]

■ 153. Remove § 86.1808–07.

■ 154. Section 86.1810–01 is amended by removing and reserving paragraph (m), and revising paragraph (f) to read as follows:

§ 86.1810–01 General standards; increase in emissions; unsafe condition; waivers.

* * * * *

(f) *Altitude requirements.* Unless otherwise specified, emission standards apply at low-altitude conditions and at high-altitude conditions. The following exceptions apply:

(1) The supplemental exhaust emission standards as described in § 86.1811–04(f) apply only at low-altitude conditions;

(2) The cold temperature NMHC emission standards as described in § 86.1811–10(g) apply only at low-altitude conditions;

(3) The evaporative emission standards specified in § 86.1811–09(e) apply at low-altitude conditions. The evaporative emission standards specified in § 86.1811–04(e) continue to apply at high-altitude conditions for 2009 and later model year vehicles.

* * * * *

■ 155. A new § 86.1810–17 is added to subpart S to read as follows:

§ 86.1810–17 General standards; increase in emissions; unsafe condition; waivers.

The following provisions apply to all vehicles certified under this subpart:

(a) Any device, system or element of design installed on or incorporated in a new motor vehicle to enable such vehicle to conform to the standards imposed by this subpart:

(1) Shall not in its operation or function cause the emission into the ambient air of any noxious or toxic substance that would not be emitted in the operation of such vehicle without such system, except as specifically permitted by regulation; and

(2) Shall not in its operation, function or malfunction result in any unsafe condition endangering the vehicle, its occupants, or persons or property in close proximity to the vehicle.

(b) In establishing the physically adjustable range of each adjustable parameter on a new motor vehicle, the manufacturer shall ensure that, taking into consideration the production tolerances, safe vehicle drivability characteristics are available within that range.

(c) Unless otherwise specified, the emission standards of this subpart apply equally for certification and for in-use vehicles throughout the specified useful-life period. Also, manufacturers must use good engineering judgment to determine that all of a vehicle's emission-related components are designed to operate properly throughout the specified useful-life period.

(d) *Crankcase emissions prohibited.* Vehicles may not discharge crankcase emissions into the ambient atmosphere.

(e) *On-board diagnostics.* All vehicles must have an on-board diagnostic system as described in § 86.1806.

(f) *Altitude requirements.* Emission standards apply at low-altitude conditions and at high-altitude conditions, except as noted in this subpart.

(g) The cold CO and cold NMHC standards in this subpart refer to test procedures set forth in subpart C of this part and 40 CFR part 1066, subpart H. All other emission standards in this subpart rely on test procedures set forth in subpart B of this part. These procedures rely on the test specifications in 40 CFR parts 1065 and 1066 as described in subparts B and C of this part.

(h) Multi-fueled vehicles (including dual-fueled and flexible-fueled vehicles) shall comply with all requirements established for each consumed fuel (or blend of fuels in the case of flexible fueled vehicles). In the case of flexible-fueled vehicles operating on ethanol and gasoline, this involves additional exhaust emission measurements using the fuel specified in 40 CFR 1065.725. No additional evaporative emission testing is required.

§ 86.1811–01 [Removed]

■ 156. Remove § 86.1811–01.

■ 157. Section 86.1811–04 is amended by removing and reserving paragraph (h) and revising paragraphs (j) and (n) to read as follows:

§ 86.1811–04 Emission standards for light-duty vehicles, light-duty trucks and medium-duty passenger vehicles.

* * * * *

(j) *Highway NO_X exhaust emission standard.* The NO_X emissions measured on the federal Highway Fuel Economy Test in 40 CFR part 600, subpart B, must not be greater than 1.33 times the applicable FTP NO_X standard to which the manufacturer certifies the test group. Both the measured emissions and the product of the NO_X standard and 1.33 must be rounded to the nearest 0.01 g/mi before being compared.

* * * * *

(n) *Requirements for vehicles with rechargeable energy storage systems.* Manufacturers must test electric vehicles according to the procedures specified in SAE J1634 (incorporated by reference in § 86.1). Manufacturers must measure emissions from hybrid electric vehicles (including plug-in hybrid electric vehicles) according to the procedures specified in SAE J1711 (incorporated by reference in § 86.1), except that these procedures do not apply for plug-in hybrid electric vehicles during charge-depleting operation,

* * * * *

■ 158. A new § 86.1811–17 is added to subpart S to read as follows:

§ 86.1811–17 Exhaust emission standards for light-duty vehicles, light-duty trucks and medium-duty passenger vehicles.

(a) *Applicability and general provisions.* This section describes exhaust emission standards that apply for model year 2017 and later light-duty vehicles, light-duty trucks, and medium-duty passenger vehicles. MDPVs are subject to all the same provisions of this section that apply to LDT4s. Some of the provisions of this section also apply to heavy-duty vehicles as specified in § 86.1816. See § 86.1818 for greenhouse gas emission standards. See § 86.1813 for evaporative and refueling emission standards. This section may apply to vehicles from model years earlier than 2017 as specified in paragraph (b)(9) of this section.

(b) *Tier 3 exhaust emission standards.* Exhaust emissions may not exceed the Tier 3 exhaust emission standards, as follows:

(1) Measure emissions using the chassis dynamometer procedures of subpart B of this part, as follows:

(i) Establish appropriate load settings based on loaded vehicle weight (see § 86.1803).

(ii) Use appropriate driving schedules. Measurements involve testing over multiple driving schedules. The Federal Test Procedure (FTP) is based on testing with the Urban Dynamometer Driving Schedule (UDDS). The Supplemental Federal Test Procedure (SFTP) involves testing with the UDDS, the US06 driving schedule, and the SC03 driving schedule. See 40 CFR 1066.801 for further information on these test cycles. SFTP emissions in particular are calculated as a composite of test results over these driving schedules based on the following calculation:

$$\text{SFTP (g/mi)} = 0.35 \cdot \text{FTP} + 0.28 \cdot \text{US06} + 0.37 \cdot \text{SC03}$$

(iii) For vehicles that qualify for the derived 5-cycle method for determining fuel economy label values and are therefore not required to operate over the SC03 driving schedule under 40 CFR 600.115, you may alternatively use FTP emission results to substitute for the SC03 value in the calculation under paragraph (b)(1)(ii) of this section for a given vehicle for any testing under this section.

(iv) Use E15 test fuel as required in § 86.113, except as specified in this section.

(v) Hydrocarbon emission standards are expressed as NMOG; however, for certain vehicles you may measure exhaust emissions based on nonmethane hydrocarbon instead of NMOG as described in 40 CFR 1066.665.

(vi) Measure emissions from hybrid electric vehicles to demonstrate compliance with the Tier 3 standards according to the procedures specified in SAE J1711 (incorporated by reference in § 86.1).

(2) Table 1 of this section describes fully phased-in Tier 3 standards that apply as specified in this paragraph (b) for the identified driving schedules. The FTP standards for NMOG+NO_X apply on a fleet-average basis using discrete bin standards as described in paragraph (b)(4) of this section. The bin standards include additional emission standards for high-altitude testing and for CO emissions when testing over the FTP driving schedule. The SFTP standards for NMOG+NOx apply on a fleet-average basis as described in paragraph (b)(5) of this section. Table 1 follows:

TABLE 1 OF § 86.1811–17—FULLY PHASED-IN TIER 3 EXHAUST EMISSION STANDARDS

[g/mile]

NMOG+NO_X		PM		CO	Formaldehyde
FTP [1]	SFTP	FTP	US06 [2]	SFTP	FTP
0.030	0.050	0.003	0.010	4.2	0.004

[1] The fleet-average FTP emission standard for NMOG+NOx is 0.026 g/mile for LDV and LDT1 if a manufacturer certifies one or more test groups based on a useful life of 120,000 miles and 10 years in a given model year.

[2] The US06 emission standard for PM is 0.020 g/mile for vehicles above 6,000 pounds GVWR.

(3) The FTP standards specified in this section apply for testing at low-altitude conditions and high-altitude conditions as specified in paragraph (b)(4) of this section. The SFTP standards specified in paragraph (b)(2) of this section apply only for testing at low-altitude conditions.

(4) The FTP emission standard for NMOG+NO_X is based on a fleet average for a given model year. You must specify a family emission limit (FEL) for each test group. The FEL serves as the emission standard for the test group with respect to all required FTP testing. Calculate your fleet-average emission level as described in § 86.1860 based on the FEL that applies for low-altitude testing to show that you meet the specified standard. For multi-fueled vehicles, calculate fleet-average emission levels based only on emission levels for testing with gasoline or diesel fuel. You may generate or use emission credits for averaging, banking, and trading as described in § 86.1861 for demonstrating compliance with the FTP emission standard for NMOG+NO_X. You comply with the emission standard for a given model year if you have enough credits to show that your fleet-average emission level is at or below the applicable standard. You may exchange FTP credits between or among any test groups subject to standards under this section. You may not exchange FTP and SFTP credits.

(i) You may specify any of the FELs from Table 2 of this section for demonstrating that your fleet-average emission level complies with the FTP emission standard for NMOG+NO_X under low-altitude conditions. These FEL values define emission bins that also determine corresponding emission standards for NMOG+NO_X emissions under high-altitude conditions, and for CO emissions, as follows:

TABLE 2 OF § 86.1811–17—TIER 3 FTP BIN STANDARDS (G/MILE)

FEL name	NMOG+NO_X FELs for low altitude	NMOG+NO_X for high altitude	CO for low and high altitude
Bin 160	0.160	0.160	4.2
Bin 125	0.125	0.160	2.1
Bin 70	0.070	0.105	1.7
Bin 50	0.050	0.070	1.7
Bin 30	0.030	0.050	1.0
Bin 20	0.020	0.030	1.0
Bin 0	0.000	0.000	0.0

(ii) Manufacturers earn a compliance credit of 0.005 g/mile NMOG+NO_X for vehicles that are certified for a useful life of 150,000 miles or 15 years and that are covered by an extended warranty over the same period for all components whose failure triggers MIL illumination. Manufacturers may apply the compliance credit as follows:

(A) You may subtract your official FTP emission result for certification by the amount of the compliance credit if that allows you to certify to a more stringent bin. In that case, you may use the more stringent bin standard for calculating the fleet-average NMOG+NO_X emission level. For any compliance testing with these vehicles, the applicable FTP bin standard for NMOG+NO_X is higher than the specified bin standard by the amount of the compliance credit. For example, if the official FTP emission result for NMOG+NO_X is 0.052 g/mile, this qualifies for an FEL of 0.050 g/mile for calculating the fleet average and the vehicle is subject to an FTP bin standard of 0.055 g/mile.

(B) If the amount of the compliance credit does not allow you to certify to a more stringent bin, calculate the fleet-average NMOG+NO_X emission level using an FEL for these vehicles that is smaller than the bin standard by the amount of the compliance credit. For any compliance testing with these vehicles, the specified bin standard applies. For example, if the official FTP emission result for NMOG+NO_X is 0.038

g/mile, calculate the fleet-average NMOG+NO_X emission level by specifying an FEL of 0.045 g/mile; these vehicles are subject to the specified FTP bin standard of 0.050 g/mile.

(iii) If you qualify for a compliance credit for direct ozone reduction under the LEV III program, you may apply the compliance credit approved for California vehicles as described in paragraphs (b)(4)(ii)(A) and (B) of this section.

(iv) You may combine the adjustments in paragraphs (b)(4)(ii) and (iii) of this section if you qualify for them separately.

(5) The SFTP emission standard for NMOG+NO_X is also based on a fleet average in a given model year. You must specify FELs as described in paragraph (b)(4) of this section and calculate a fleet-average emission level to show that you meet the SFTP emission standard for NMOG+NO_X, except that you may specify FELs in any even increment of 0.010 g/mile up to a maximum value of 0.180 g/mile. You may generate or use emission credits for averaging, banking, and trading as described in § 86.1860 for demonstrating compliance with the SFTP emission standard for NMOG+NO_X. You comply with the emission standard for a given model year if you have enough credits to show that your fleet-average emission level is at or below the applicable standard. You may exchange SFTP credits between or among any test groups subject to standards under this section. You may not exchange FTP and SFTP credits. The SFTP standards described in this section apply only for testing at low-altitude conditions.

(6) The full Tier 3 program includes new emission standards for NMOG+NO_X, PM, CO, and formaldehyde; it also includes measurement with a new test fuel and a longer useful life (for some vehicles). Vehicles meeting all these requirements are considered Final Tier 3 vehicles. Vehicles that do not meet all the Tier 3 requirements are considered Interim Tier 3 vehicles. The Tier 3 PM standards phase in over several years. The following provisions describe the primary approach for phasing in the Tier 3 PM standards:

(i) You must meet the FTP and the US06 PM standards with 20, 20, 40, 70, and 100 percent of your projected nationwide sales of all vehicles subject to this section in model years 2017 through 2021, respectively. Each vehicle meeting the Tier 3 FTP standard for PM must also meet the Tier 3 US06 standard for PM. In model year 2017, the phase-in requirement applies only for vehicles at or below 6,000 pounds GVWR; however, if you certify these vehicles to the Tier 3 PM standards in the model year 2017, you may count those projected U.S. sales toward your calculation for meeting the phase-in percentage for that year (numerator only).

(ii) You may disregard the phase-in percentages specified in paragraph (b)(6)(i) of this section if you instead comply with an indexed PM phase-in schedule as described in this paragraph (b)(6)(ii). To do this, you must notify us of your intent before January 1, 2017, and include a detailed plan for complying with the indexed phase-in schedule. You comply with the indexed phase-in schedule by calculating a PM phase-in index at or above 540 using the following equation for model years 2017 through 2021:

$$\text{PM phase-in index} = 5 \cdot APP_{2017} + 4 \cdot APP_{2018} + 3 \cdot APP_{2019} + 2 \cdot APP_{2020} + APP_{2021}$$

Where:

APP = The actual phase-in percentage of vehicles meeting the Tier 3 p.m. standards for the indicated model year, based on actual sales, as described in paragraph (b)(6)(i) of this section.

(iii) You may alternatively ask us to approve calculation of the annual percentage for a given model year based on production volumes instead of sales volumes.

(iv) Vehicles meeting the Tier 3 PM standards must meet those standards over the useful life as specified in § 86.1805–17. Note that Interim Tier 3 vehicles may have different useful life values for PM emission standards than for other emission standards.

(v) Any vehicles not included for demonstrating compliance with the Tier 3 p.m. phase-in requirement must instead comply with an FTP emission standard for PM of 0.010 g/mile, and a composite SFTP emission standard for PM of 0.070 g/mile.

(vi) Measure PM emissions from all vehicles using the same test fuel used for measuring NMOG+NO_X emissions.

(vii) You may certify Interim Tier 3 vehicles based on carryover data.

(viii) You may use the alternative phase-in provisions described in paragraph (b)(8) of this section to transition to the Tier 3 exhaust emission standards on a different schedule.

(7) The following provisions describe the primary approach for phasing in the Tier 3 standards other than PM in 2025 and earlier model years:

(i) *FTP phase-in.* The fleet-average FTP emission standard for NMOG+NO_X phases in over several years as described in this paragraph (b)(7)(i). You must identify FELs as described in paragraph (b)(4) of this section and calculate a fleet-average emission level to show that you meet the FTP emission standard for NMOG+NO_X that applies for each model year. For model year 2017, do not include vehicles above 6,000 pounds GVWR (in the numerator or denominator). Through model year 2019, you may also certify to transitional Bin 85 or Bin 110 standards, which consist of all-altitude FTP emission standards for NMOG+NO_X of 0.085 or 0.110 g/mile, respectively; additional FTP standards for PM, CO, and formaldehyde apply as specified in this section for vehicles certified to Bin 125 standards. Fleet-average FTP emission standards decrease through the phase-in period as shown in the following table:

TABLE 3 OF § 86.1811–17—DECLINING FLEET-AVERAGE TIER 3 FTP EMISSION STANDARDS FOR NMOG+NO_X

[g/mile]

Model Year	LDV, LDT1 [1]	LDT2, HLDT
2017 [2]	0.086	0.101
2018	0.079	0.092
2019	0.072	0.083
2020	0.065	0.074
2021	0.058	0.065
2022	0.051	0.056
2023	0.044	0.047
2024	0.037	0.038
2025	0.030	0.030

[1] If a manufacturer certifies one or more LDV or LDT1 test groups based on a useful life of 120,000 miles and 10 years in a given model year, calculate the adjusted fleet-average standard by multiplying the specified value by 0.85 and rounding to the nearest 0.001 g/mile. Through model year 2019, apply this adjustment only if one or more test groups is certified to Bin 70 or lower standards based on a useful life of 120,000 miles and 10 years.

[2] Vehicles above 6,000 pounds GVWR must meet the Tier 3 standards starting with the 2018 model year.

(ii) *SFTP phase-in.* The fleet-average SFTP emission standard for NMOG+NO_X phases in over several years as described in this paragraph (b)(7)(ii). You must identify FELs as described in paragraph (b)(5) of this section and calculate a fleet-average emission level to show that you meet the SFTP emission standard for NMOG+NO_X that applies for each model year.

(A) Calculate the fleet-average emission level together for all your light-duty vehicles and light-duty trucks, except for those certified using the provisions of paragraph (b)(7)(ii)(C) of this section. For model year 2017, do not include vehicles above 6,000 pounds GVWR (in the numerator or denominator).

(B) Fleet-average FTP emission standards decrease through the phase-in period as shown in the following table:

TABLE 4 OF § 86.1811–17—DECLINING FLEET-AVERAGE TIER 3 SFTP EMISSION STANDARDS

Model lYear	NMOG+NO_X (g/mile)
2017 [1]	0.103
2018	0.097
2019	0.090
2020	0.083
2021	0.077
2022	0.070
2023	0.063
2024	0.057
2025	0.050

[1] Vehicles above 6,000 pounds GVWR must meet the Tier 3 standards starting with the 2018 model year.

(C) You may use the Option 1 provisions specified in the LEV III program to demonstrate compliance with EPA's SFTP standards instead of the phased-in fleet-average SFTP standards specified in this paragraph (b)(7)(ii).

(iii) *Interim provisions.* (A) For LDT2 and HLDT certified to Bin 125 or Bin 160 standards under this section through model year 2019, the Tier 2 useful life period applies as specified in § 86.1805–12.

(B) You may alternatively use the E0 test fuel specified in § 86.113 through model year 2019 for vehicles certified to bins higher than Bin 70. You may not certify these vehicles in model year 2020 using carryover data.

(iv) You may use the alternative phase-in provisions described in paragraph (b)(8) of this section to transition to the Tier 3 exhaust emission standards on a different schedule.

(8) This paragraph (b)(8) describes an alternative approach to phasing in the Tier 3 emission standards. If you choose this approach, you must phase in the Tier 3 standards for all your vehicles subject to this section according to this schedule. Under this alternative phase-in, you must meet all the FTP and SFTP emission standards as specified in paragraphs (b)(1) through (6) of this section with 40, 70, and 100 percent of your projected nationwide sales of all vehicles subject to this section in model years 2019 through 2021, respectively. Any vehicles not subject to Tier 3 standards during the phase-in period must continue to comply with the Tier 2 standards in § 86.1811–04(c) and (f), including the Tier 2 SFTP emission standards for NMHC+NO_X and CO for 4,000-mile testing as specified in § 86.1811–04(f)(1). Vehicles subject to Tier 2 standards under this paragraph (b)(8) are subject to the useful life provisions in § 86.1805–12. Each vehicle counting toward the phase-in percentage under this paragraph (b)(8) must meet all the standards that apply based on the useful life provisions of § 86.1805–17, and must use the Tier 3 test fuel specified in § 86.113–07. Vehicles certified under this paragraph (b)(8) may not generate or use emission credits.

(9) You may not use credits generated from Tier 2 vehicles for demonstrating compliance with the Tier 3 standards except as specified in this paragraph (b)(9). You may generate early credits with U.S. sales of Tier 2 vehicles in the two model years before the Tier 3 standards start to apply for a given vehicle model. Separate from any Tier 2 demonstrations, calculate early Tier 3 emission credits as described in § 86.1861 by determining a fleet-average value for FTP emissions of NMOG+NO_X based on the applicable bin standards and subtracting this value from 0.160 g/mile. Calculate your fleet-average value for the model year based on vehicles at or below 6,000 pounds GVWR in 2015, on all sizes of vehicles in 2016, and on vehicles above 6,000 pounds GVWR in 2017. Vehicles certified to the Tier 2 standards must meet all the Tier 2 requirements in § 86.1811–10. You must also continue to meet the fleet-average Tier 2 standards as long as they apply. You may use these early credits as described in § 86.1861 for demonstrating compliance with the FTP emission standard for NMOG+NO_X; however, starting in model year 2018, use of early credits is subject to a limitation based on credits generated in California, as follows:

(i) For the applicable model years in which you generate emission credits relative to California's LEV III fleet-average NMOG+NO_X standard, determine the actual California sales of light-duty vehicles and light-duty trucks and the actual nationwide sales of those same vehicles. In 2015, count sales only from vehicle models at or below 6,000 pounds GVWR. For each model year, multiply the credits generated under the California program by the ratio of nationwide sales to California sales to calculate an effective nationwide quantity. Sum these results for model years 2015 through 2017.

(ii) You may not use more early credits generated under this paragraph (b)(9) to meet Tier 3 emission standards than the calculated value of the effective nationwide credit quantity summed in paragraph (b)(9)(i) of this section. If your generated credits are greater than this threshold, determine the percentage of your generated early credits that exceed the threshold. Calculate an adjusted quantity of early credits generated under this paragraph (b)(9) by decreasing the generated quantity from each model year by the calculated percentage that exceed the applicable threshold. This adjusted quantity of credits may be used for demonstrating compliance with the Tier 3 standards, subject to the five-year credit life described in § 86.1861.

(10) The following alternate standards apply for in-use testing with 2021 and earlier model year vehicles:

(i) The alternate in-use PM emission standard for FTP testing is 0.006 g/mile.

(ii) The alternate in-use PM emission standards for SFTP testing are 0.015 g/mile for vehicles at or below 6,000 pounds GVWR and 0.025 g/mile for vehicles above 6,000 pounds GVWR.

(iii) Alternate in-use NMOG+NO_X emission standards for FTP testing apply for vehicles certified to Bin 70 and lower. Calculate these alternate standards by multiplying the applicable FEL by 1.4. These alternate standards apply only for testing at low-altitude conditions.

(11) Keep records as needed to show that you meet the requirements specified in this paragraph (b) for phasing in standards and for complying with declining fleet-average average standards.

(c) *Highway NMOG+NO_X exhaust emission standard.* NMOG+NO_X emissions measured on the federal Highway Fuel Economy Test in 40 CFR part 600, subpart B, may not exceed the applicable NMOG+NO_X bin standard for FTP testing. Demonstrate compliance with this standard for low-mileage vehicles by applying the appropriate deterioration factor.

(d) *Special provisions for Otto-cycle engines.* The following special provisions apply for vehicles with Otto-cycle engines:

(1) *Enrichment limits.* The nominal air-fuel ratio throughout the US06 cycle may not be richer than the leanest air-fuel mixture required for lean best torque, except as allowed under paragraph (d)(2) of this section. Unless we approve otherwise in advance, lean best torque is the leanest air-fuel ratio required at any speed and load point with a fixed spark advance to make peak torque. The allowable tolerance around the nominal value for any given speed and load point over the US06 cycle for a particular vehicle is 4 percent, which is calculated as the nominal mass-based air-fuel ratio for lean best torque divided by 1.04.

(2) *Engine protection.* AECDs that use commanded enrichment to protect the engine or emission control hardware

must not use enrichment more frequently or to a greater degree than is needed for this purpose. For purposes of this section, commanded enrichment includes intended engine operation at air-fuel ratios rich of stoichiometry, except the following:

(i) Cycling back and forth in a narrow window between rich and lean operation as a result of feedback controls targeted to maintain overall engine operation at stoichiometry.

(ii) Small changes in the target air-fuel ratio to optimize vehicle emissions or drivability. This may be called ''closed-loop biasing.''

(iii) Temporary enrichment in response to rapid throttle motion.

(iv) Enrichment during cold-start and warm-up conditions.

(v) Temporary enrichment for running OBD checks to comply with § 86.1806.

(3) *A/C-on specific calibrations.* (i) A/C-on specific calibrations (e.g., air-fuel ratio, spark timing, and exhaust gas recirculation) that differ from A/C-off calibrations may be used for a given set of engine operating conditions (e.g., engine speed, manifold pressure, coolant temperature, air charge temperature, and any other parameters). Such calibrations must not unnecessarily reduce emission control effectiveness during A/C-on operation when the vehicle is operated under conditions that may reasonably be expected during normal operation and use. If emission control effectiveness decreases as a result of such calibrations, the manufacturer must describe in the Application for Certification the circumstances under which this occurs and the reason for using these calibrations.

(ii) For AECDs involving commanded enrichment, these AECDs must not operate differently for A/C-on operation than for A/C-off operation, except as provided under paragraph (d)(2) of this section. This includes both the sensor inputs for triggering enrichment and the degree of enrichment employed.

(4) *''Lean-on-cruise'' calibration strategies.* Manufacturers may use ''lean-on-cruise'' strategies subject to the following specifications:

(i) A ''lean-on-cruise'' strategy is defined as the use of an air-fuel ratio significantly leaner than stoichiometry during non-deceleration conditions at speeds above 40 mph.

(ii) You must not employ ''lean-on-cruise'' strategies during vehicle operation in normal driving conditions, including A/C usage, unless at least one of the following conditions is met:

(A) Such strategies are substantially employed during the FTP, US06, or SC03 duty cycle.

(B) Such strategies are demonstrated not to significantly reduce vehicle emission control effectiveness over the operating conditions in which they are employed.

(C) Such strategies are demonstrated to be necessary to protect the vehicle occupants, engine, or emission control hardware.

(iii) If you propose to use a ''lean-on-cruise'' strategy, you mustdescribe in the application for certification the circumstances under which such a calibration would be used and the reasons for using it.

(e) through (f) [Reserved]

(g) *Cold temperature exhaust emission standards.* The following standards apply for vehicles tested over the test procedures specified in subpart C of this part:

(1) *Cold temperature CO standards.* These cold temperature CO standards are applicable only to gasoline-fueled vehicles. These standards apply for testing at low-altitude conditions and high-altitude conditions. Cold temperature CO exhaust emission standards apply when measured using the test procedures specified in subpart C of this part, as follows:

(i) For LDVs and LDT1s, the standard is 10.0 g/mile CO.

(ii) For LDT2s, LDT3s and LDT4s, the standard is 12.5 grams per mile CO.

(2) *Cold temperature NMHC standards.* Fleet average cold temperature NMHC standards are applicable only to gasoline-fueled vehicles, and apply equally to certification and in-use except as otherwise specified in § 86.1811–10(u) for in-use standards for applicable phase-in models. Testing with other fuels such as E85, or testing on diesel vehicles, is not required. Multi-fuel, bi-fuel or dual-fuel vehicles must comply with requirements using gasoline only.

(i) The standards are shown in the following table:

TABLE 5 OF § 86.1811–17—FLEET AVERAGE COLD TEMPERATURE NMHC EXHAUST EMISSION STANDARDS

Vehicle weight category	Cold temperature NMHC sales-weighted fleet average standard (g/mile)
LDVs & LLDTs (≤6,000 lbs GVWR)	0.3
HLDTs >6,000 lbs GVWR	0.5

(ii) The manufacturer must calculate its fleet average cold temperature NMHC emission level(s) as described in § 86.1864–10(m).

(iii) The standards specified in this paragraph (g)(2) apply only for testing at low-altitude conditions. However, manufacturers must submit an engineering evaluation indicating that common calibration approaches are utilized at high altitudes. Any deviation from low altitude emission control practices must be included in the auxiliary emission control device (AECD) descriptions submitted at certification. Any AECD specific to high altitude must require engineering emission data for EPA evaluation to quantify any emission impact and validity of the AECD.

(h) *Small-volume manufacturers.* Small-volume manufacturers meeting the eligibility requirements in § 86.1838 may delay complying with the requirements in this section until model year 2022. This also applies for continuing to use the E0 test fuel specified in § 86.113 through model year 2022. If meeting the Tier 3 standards in model year 2022 would cause severe economic hardship, such manufacturers may ask us to approve an extended compliance deadline under the provisions of 40 CFR 1068.250, except that the solvency criterion does not apply and there is no maximum duration of the hardship relief.

§§ 86.1812–01 and 86.1813–01 [Removed]

■ 159. Remove §§ 86.1812–01 and 86.1813–01.

■ 160. A new § 86.1813–17 is added to subpart S to read as follows:

§ 86.1813–17 Evaporative and refueling emission standards.

Vehicles must meet evaporative and refueling emission standards as specified in this section. The emission standards apply for total hydrocarbon equivalent (THCE) measurements using the test procedures specified in subpart B of this part, as appropriate. Note that § 86.1829 allows you to certify without testing in certain circumstances. Except as specified in paragraph (b) of this section, evaporative and refueling emission standards do not apply for diesel-fueled vehicles. Unless otherwise specified, MDPVs are subject to all the same provisions of this section that apply to LDT4s.

(a) *Tier 3 evaporative emission standards.* Vehicles may not exceed the Tier 3 evaporative emission standards, as follows:

(1) Measure emissions using the test procedures of subpart B of this part, as follows:

(i) Follow the vehicle preconditioning and exhaust testing procedures as described in subpart B of this part.

(ii) Measure diurnal, running loss, and hot soak emissions as shown in § 86.130.

(iii) Use E15 test fuel as required in § 86.113, except as specified in this section.

(iv) Emissions are measured as total hydrocarbon; however, in the case of E15 test fuel, multiply measured values by 1.1 to convert values to total hydrocarbon equivalent.

(2) Diurnal and hot soak emissions may not exceed the Tier 3 emission standards, as follows:

(i) The emission standard for the sum of diurnal and hot soak measurements from the two-diurnal test sequence and the three-diurnal test sequence is based on a fleet average in a given model year. You must specify a family emission limit (FEL) for each test group. The FEL serves as the emission standard for the test group with respect to all required diurnal and hot soak testing. Calculate your fleet average emission level as described in § 86.1860 based on the FEL that applies for low-altitude testing to show that you meet the specified standard. For multi-fueled vehicles, calculate fleet-average emission levels based only on emission levels for testing with gasoline. You may generate or use emission credits for averaging, banking, or trading for vehicles required to meet the Tier 3 standards, other than electric vehicles and gaseous-fueled vehicles, as described in § 86.1861 for demonstrating compliance with the hot soak plus diurnal emission standard starting in the 2017 model year. You comply with the emission standard for a given model year if you have enough credits to show that your fleet-average emission level is at or below the applicable standard. You may exchange credits between or among test groups within an averaging set as described in § 86.1861. Separate diurnal plus hot soak emission standards apply as shown for high-altitude conditions. The sum of diurnal and hot soak measurements may not exceed the following fleet-average Tier 3 standards:

TABLE 1 OF § 86.1813–17—TIER 3 DIURNAL PLUS HOT SOAK EMISSION STANDARDS

[Grams per test]

Vehicle category	Low-altitude conditions	High-altitude conditions
LDV, LDT1	0.300	0.65
LDT2	0.400	0.85
HLDT	0.500	[1] 1.15

TABLE 1 OF § 86.1813–17—TIER 3 DIURNAL PLUS HOT SOAK EMISSION STANDARDS—Continued

[Grams per test]

Vehicle category	Low-altitude conditions	High-altitude conditions
HDV	0.600	1.75

[1] 1.25 g/test for MDPVs.

(ii) Specify FELs as follows:

(A) You may specify the low-altitude FEL in increments of 0.025 g above or below the otherwise applicable Tier 3 diurnal plus hot soak standard, up to the maximum values specified in the following table:

TABLE 2 OF § 86.1813–17—TIER 3 FEL CAPS FOR LOW-ALTITUDE TESTING

Vehicle category	FEL caps
LDV	0.500
LLDT	0.650
HLDT	0.900
MDPV	1.000
HDV	1.4

(B) Calculate the FEL for testing at high-altitude conditions based on the difference between the low-altitude FEL and the standard. For example, if a light-duty vehicle was certified with an FEL of 0.400 g instead of the 0.300 g standard, the FEL for testing under high-altitude conditions would be 0.75 g (0.65+0.10).

(iii) Hydrocarbon emissions must not exceed 0.020 g for LDVs and LDTs and 0.030 g for HDVs when tested using the Bleed Emission Test Procedure adopted by the California Air Resources Board (incorporated by reference in § 86.1). This procedure quantifies diurnal emissions without measuring hot soak emissions. The standards in this paragraph (a)(2)(iii) do not apply for testing at high-altitude conditions. For vehicles with non-integrated refueling emission control systems, the bleed emission test and standard do not apply to the refueling canister.

(3) Running losses may not exceed 0.05 g per mile when measured using the test procedures specified in § 86.134.

(4) Fuel systems for vehicles operating on one or more volatile liquid fuels may not exceed an effective leak diameter of 0.02 inches when measured using the procedure specified in 40 CFR 1066.840. For vehicles with fuel tanks exceeding 25 gallons nominal fuel tank capacity, you may request our approval for a leak standard greater than 0.020 inches, up to a maximum value of 0.040 inches.

(5) The Tier 3 evaporative emission standards start to phase in with model year 2017 for vehicles at or below 6,000 pounds GVWR and with model year 2018 for vehicles above 6,000 pounds GVWR. Table 3 of this section specifies the minimum percentage of each manufacturer's sales in each model year that must be certified to the Tier 3 evaporative emission standards. Calculate annual percentages based on actual nationwide sales of all vehicles subject to standards under this paragraph (a) for the applicable model year; however, if all your FELs for Tier 3 test groups are at the applicable standard (neither generating nor using emission credits), the phase-in requirements are based on projected sales. Also, if you certify vehicles above 6,000 pounds GVWR to the Tier 3 evaporative emission standards in model year 2017, you may count projected U.S. sales of those vehicles toward your calculation for meeting the 40 percent requirement in 2017 (numerator only). Manufacturers may meet this requirement using the additional alternative phase-in provisions in paragraph (g) of this section. Vehicles from the identified model years not certified to the Tier 3 evaporative emission standards continue to be subject to the evaporative emission standards specified in § 86.1811–09(e) or § 86.1816–08(d), including the useful life provisions of § 86.1805–12. Note that this subjects LDVs and LDT1s to a 150,000 mile useful life for evaporative emissions if the vehicles are subject to a 150,000 mile useful life for exhaust emissions. Keep records as needed to show that you meet the phase-in requirements specified in this section.

TABLE 3 OF § 86.1813–17—DEFAULT PHASE-IN SCHEDULE FOR TIER 3 EVAPORATIVE EMISSION STANDARDS

Model year	Minimum percentage of vehicles subject to the Tier 3 standards
2017	[1] [2] 40
2018	60
2019	60
2020	80
2021	80
2022	100

[1] The phase-in percentage for model year 2017 applies only for vehicles at or below 6,000 pounds GVWR.

[2] The leak standard specified in paragraph (a)(4) of this section does not apply for model year 2017.

(6) For model year 2017, exclude vehicle sales from California and section

177 states from the calculation to demonstrate compliance with the phase-in schedule in paragraph (a)(5) or (g) of this section, and from the credit calculation in § 86.1860.

(b) *Refueling emissions.* Vehicles must meet the refueling emission standards in this paragraph (b) when measured over the procedure specified in § 86.150. These standards apply starting with model year 2018 for vehicles above 10,000 pounds GVWR. The following refueling standards apply:

(1) 0.20 g THCE per gallon of fuel dispensed for gasoline-fueled, diesel-fueled and methanol-fueled vehicles.

(2) 0.15 g THC per gallon of fuel dispensed for liquefied petroleum gas-fueled vehicles.

(c) *Fuel spitback.* For vehicles fueled by volatile liquid fuels, fuel spitback emissions may not exceed 1.0 g THCE when measured using the test procedures specified in § 86.146. The fuel spitback standard applies only to newly assembled vehicles.

(d) [Reserved]

(e) *Auxiliary engines and separate fuel systems.* The provisions of 40 CFR 1037.103(f) apply for vehicles with auxiliary engines. This includes any engines installed in the final vehicle configuration that contribute no motive power through the vehicle's transmission.

(f) *Refueling provisions for gaseous fuel vehicles.* The following provisions apply specifically for gaseous fuel vehicles:

(1) Refueling receptacles on natural gas-fueled vehicles must comply with the receptacle provisions of the ANSI/AGA NGV1–1994 standard (incorporated by reference in § 86.1).

(2) With our advance approval, liquefied petroleum gas-fueled vehicles with gauges or valves that can be opened to release fuel or fuel vapor during refueling (such as fixed liquid level gauges) may be tested for refueling emissions without opening such gauges or valves, as outlined in § 86.157–98(d)(2). We will approve your request if you can show that such gauges or valves will not be open during in-use refueling due to inaccessibility or other design features that would prevent them from opening or make this very unlikely.

(g) *Alternative phase-in options for Tier 3 evaporative emission standards.* You may use any of the following alternative methods to transition to the Tier 3 evaporative emission standards:

(1) Starting in model year 2015, you may earn an ''allowance'' for each vehicle at or below 14,000 pounds GVWR that you certify early to the Tier 3 standards in paragraph (a) of this section, as long as the vehicle is not sold in California or any of the section 177 states. This applies in model years 2015 and 2016 for vehicles at or below 6,000 pounds GVWR and in model years 2015 through 2017 for vehicles above 6,000 pounds GVWR. For each allowance you earn, you may count it as one compliant vehicle in a later model year during the phase-in period. As an example, selling 100,000 Tier 3 vehicles in 2016 and a total of 400,000 vehicles at or below 14,000 pounds GVWR in 2017 would allow a manufacturer to ''spend'' up to 40,000 allowances in both 2017 and 2018, leaving a total of 20,000 allowances for 2019 through 2022. Calculate the total phase-in percentage in each model year by adding the allowances to the number of compliant vehicles (in the numerator), without increasing total sales (in the denominator). For each allowance you earn, you may alternatively count it as one compliant vehicle for model year 2018 under the phase-in schedule described in paragraph (g)(5) of this section; however, you may not use those allowances to increase the value of APP in any model year by more than 10 percentage points. Vehicles earning allowances under this paragraph (g)(1) may not have an FEL above the applicable Tier 3 standard, and may not generate emission credits. Allowances may not be traded to another company. You may earn additional allowances under this paragraph (g)(1) as follows:

(i) To the extent that you over-comply with the 40-percent phase-in requirement in model year 2017, you may count your actual U.S. sales exceeding the required number of Tier 3 vehicles as allowances toward meeting the phase-in requirement in 2018 and later model years.

(ii) For vehicles above 10,000 pounds GVWR that you certify to the refueling emission standards in paragraph (b) of this section in model years 2015 through 2017, a single vehicle may produce two allowances if it is certified to the Tier 3 diurnal plus hot soak standard and the refueling standard. Allowances earned under this paragraph (g)(1)(ii) may alternatively be used in model years 2018 through 2022 to phase in the refueling standard.

(2) [Reserved]

(3) You may disregard the percentage phase-in specified in paragraph (a)(5) of this section for 2017 if you choose 50-state certification for all your vehicles meeting the LEV III PZEV evaporative standards in 2017. Under this option, you may not produce a higher-emitting version of those vehicle models for sale outside of California or the section 177 states. Such vehicles may be certified using carryover data under the California program; however, they may generate or use emission credits only if they are certified to meet the emission standards of paragraph (a)(2) of this section. Vehicles that comply under this paragraph (g)(3) may not generate allowances under paragraph (g)(1) of this section, regardless of the calculated percentage of compliant vehicles in model year 2017.

(4) If you certify model year 2019 or earlier vehicles to the LEV III emission standards in California, you may certify those as Tier 3 vehicles that count toward meeting the phase-in requirements of this section. Such vehicles must still be certified to the leak standard specified in paragraph (a)(4) of this section and the high-altitude standards in paragraph (a)(2) of this section. You may not certify vehicles under this paragraph (g)(4) after model year 2019. Vehicles meeting the LEV III standards may also generate allowances under paragraph (g)(1) of this section; however, these vehicles may generate or use emission credits under this subpart only if they are not used to generate allowances and if they are certified using the Option 2 procedures under the LEV III program (including the bleed emission test).

(5) You may disregard the phase-in percentages specified in paragraph (a)(5) of this section for 2018 through 2022 if you instead comply with the alternate phase-in schedule described in this paragraph (g)(5). To do this, you must notify us of your intent before January 1, 2018, and include a detailed plan for complying with the alternate phase-in schedule. You comply with the alternate phase-in schedule by calculating an evaporative phase-in index at or above 1,040 using the following equation for model years 2018 through 2022:

$$\text{Evaporative phase-in index} = 5 \cdot APP_{2018} + 4 \cdot APP_{2019} + 3 \cdot APP_{2020} + 2 \cdot APP_{2021} + APP_{2022}$$

Where:

APP = The actual phase-in percentage of vehicles meeting the Tier 3 evaporative emission standards for the indicated model year, based on actual sales; you may instead ask us to calculate the annual percentage based on actual production volumes.

(6) You may alternatively use the E0 test fuel specified in § 86.113 through model year 2019 for vehicles certified to emission standards comparable to the standards in this section based on testing specified by the California Air Resources Board. You may not certify these vehicles in model year 2020 using carryover data.

(h) *Small-volume manufacturers.* Small-volume manufacturers meeting the eligibility requirements in § 86.1838 may delay complying with the requirements in this section until model year 2022. If meeting the Tier 3 standards in model year 2022 would cause severe economic hardship, such manufacturers may ask us to approve an extended compliance deadline under the provisions of 40 CFR 1068.250, except that the solvency criterion does not apply and there is no maximum duration of the hardship relief.

§§ 86.1814–01, 86.1814–02, 86.1815–01, and 86.1815–02 [Removed]

■ 161. Remove §§ 86.1814–01, 86.1814–02, 86.1815–01, and 86.1815–02.

■ 162. A new § 86.1816–18 is added to subpart S to read as follows:

§ 86.1816–18 Emission standards for heavy-duty vehicles.

(a) *Applicability and general provisions.* This section describes exhaust emission standards that apply for model year 2018 and later complete heavy-duty vehicles at or below 14,000 pounds GVWR. These standards are optional for incomplete heavy-duty vehicles and for heavy duty vehicles above 14,000 pounds GVWR as described in § 86.1801. Greenhouse gas emission standards are specified in § 86.1818 for MDPVs and in 40 CFR 1037.104 for other HDVs. See § 86.1813 for evaporative and refueling emission standards. This section may apply to vehicles before model year 2018 as specified in paragraph (b)(10) of this section. Separate requirements apply for MDPVs as specified in § 86.1811. See subpart A of this part for requirements that apply for incomplete heavy-duty vehicles and for heavy-duty engines certified independent of the chassis. The following general provisions apply:

(1) Test all vehicles as described in this section using a chassis dynamometer; establish appropriate load settings based on adjusted loaded vehicle weight (see § 86.1803).

(2) Some provisions apply differently depending on the vehicle's power-to-weight ratio. Determine a vehicle's power-to-weight ratio by dividing the engine's rated power by the vehicle's GVWR (in hp/pound). For purposes of this section, if a test group includes multiple configurations, use the vehicle with the highest power-to-weight ratio to characterize the test group.

(3) Use E15 test fuel as required in § 86.113, except as specified in this section.

(4) Measure emissions from hybrid electric vehicles to demonstrate compliance with the standards of this section according to the procedures specified in SAE J1711 (incorporated by reference in § 86.1).

(b) *Tier 3 exhaust emission standards.* Exhaust emissions may not exceed the Tier 3 exhaust emission standards, as follows:

(1) Measure emissions using the procedures of subpart B of this part, using specific driving schedules and additional procedures as follows:

(i) The Federal Test Procedure (FTP) is based on testing with the Urban Dynamometer Driving Schedule (UDDS) specified in paragraph (a) of Appendix I of this part.

(ii) The Heavy-Duty Supplemental Federal Test Procedure (HD–SFTP) involves testing with the UDDS, the SC03 driving schedule specified in paragraph (h) of Appendix I of this part, and one of the following additional driving schedules:

(A) For Class 2b vehicles, the US06 driving schedule specified in paragraph (g) of Appendix I of this part.

(B) For Class 2b vehicles with a power-to-weight ratio at or below 0.024 hp/pound that are certified to optional standards under paragraphs (b)(2) and (4) of this section, the highway portion of the US06 driving schedule characterized as the ''second bag'' in § 86.159–08(a).

(C) For Class 3 vehicles, the LA–92 driving schedule as specified in paragraph (c) of Appendix I of this part.

(iii) HD–SFTP emissions are calculated as a composite of test results over these driving schedules based on the following calculation:

$$\text{HD–SFTP (g/mi)} = 0.35 \cdot \text{FTP} + 0.28 \cdot \text{HDSIM} + 0.37 \cdot \text{SC03}$$

Where:

HDSIM = the appropriate driving schedule specified in paragraph (b)(1)(ii)(A) through (C) of this section.

(iv) You may alternatively use FTP emission results to substitute for the SC03 value in the calculation under paragraph (b)(1)(iii) of this section for a given vehicle for any testing under this section.

(v) Hydrocarbon emission standards are expressed as NMOG; however, you may measure exhaust emissions based on nonmethane hydrocarbon instead of NMOG as described in 40 CFR 1066.665.

(2) Table 1 of this section describes fully phased-in Tier 3 standards that apply as specified in this paragraph (b) for the identified driving schedules. The FTP standards for NMOG+NO_X apply on a fleet-average basis using discrete bin standards as described in paragraph (b)(4) of this section. The bin standards include additional emission standards for CO emissions, and for NMOG+NO_X standards when testing over the HD–SFTP driving schedule. Table 1 follows:

TABLE 1 OF § 86.1816–18—FULLY PHASED-IN TIER 3 HDV EXHAUST EMISSION STANDARDS

[g/mile]

HDV Class	Fleet-average NMOG+NO_X	PM		Formaldehyde
	FTP	FTP	HD–SFTP	FTP
2b	0.178	0.008	[1] 0.010	0.006
3	0.247	0.010	0.007	0.006

[1] For vehicles with a power-to-weight ratio at or below 0.024 hp/pound that are certified using the driving schedule described in paragraph (b)(1)(ii)(B) of this section, the HD–SFTP standard for PM is 0.007 g/mile instead of the value specified in the table.

(3) The FTP standards specified in this section apply equally for testing at low-altitude conditions and high-altitude conditions. The HD–SFTP standards described in this section apply only for testing at low-altitude conditions.

(4) The FTP emission standard for NMOG+NO_X is based on a fleet average in a given model year. You must specify a family emission limit (FEL) for each test group. The FEL serves as the emission standard for the test group with respect to all required FTP testing. Calculate your fleet-average emission level as described in § 86.1860 to show that you meet the specified standard. For multi-fueled vehicles, calculate fleet-average emission levels based only on emission levels for testing with gasoline or diesel fuel. You may

generate or use emission credits for averaging, banking, or trading as described in § 86.1860 for demonstrating compliance with the FTP emission standard for NMOG+NO_X. You comply with the emission standard for a given model year if you have enough credits to show that your fleet-average emission level is at or below the applicable standard. You may exchange credits between or among any test groups subject to standards under this section. You may specify any of the FELs from Table 2 or Table 3 of this section for demonstrating that your fleet-average emission level complies with the FTP emission standard for NMOG+NO_X. These FEL values define emission bins that also determine corresponding emission standards for NMOG+NO_X emissions over the HD–SFTP driving schedule and for CO emissions, as follows:

TABLE 2 OF § 86.1816–18—TIER 3 BIN STANDARDS—CLASS 2b

[g/mile]

FEL Name		NMOG+NO_X	CO	
FTP (FEL)	HD–SFTP [1]		FTP	HD–SFTP
Bin 250	0.250	0.800	6.4	22.0
Bin 200	0.200	0.800	4.2	22.0
Bin 170	0.170	0.450	4.2	12.0
Bin 150	0.150	0.450	3.2	12.0
Bin 0 [2]	0.000	0.000	0.0	0.0

[1] Vehicles with a power-to-weight ratio at or below 0.024 hp/pound that are certified using the driving schedule described in paragraph (b)(1)(ii)(B) of this section, the following HD–SFTP bin standards for NMOG+NO_X apply instead of those identified in the table: 0.350 g/mile for Bin 150 and Bin 170; and 0.550 g/mile for Bin 200 and Bin 250.

[2] Vehicles certified to Bin 0 must also meet PM and formaldehyde standards of 0.000 g/mile instead of the standards specified in paragraph (b)(2) of this section.

TABLE 3 OF § 86.1816–18—TIER 3 BIN STANDARDS—CLASS 3

[g/mile]

FEL Name	NMOG+NO_X		CO	
	FTP (FEL)	HD–SFTP	FTP	HD–SFTP
Bin 400	0.400	0.550	7.3	6.0
Bin 270	0.270	0.550	4.2	6.0
Bin 230	0.230	0.350	4.2	4.0
Bin 200	0.200	0.350	3.7	4.0
Bin 0 [1]	0.000	0.000	0.0	0.0

[1] Vehicles certified to Bin 0 must also meet PM and formaldehyde standards of 0.000 g/mile instead of the standards specified in paragraph (b)(2) of this section.

(5) [Reserved]

(6) The full Tier 3 program includes new emission standards for NMOG+NO_X, PM, CO, and formaldehyde; it also includes measurement with a new test fuel and a longer useful life. Vehicles meeting all these requirements are considered Final Tier 3 vehicles. Vehicles that do not meet all the Tier 3 requirements are considered Interim Tier 3 vehicles. The Tier 3 PM standards phase in over several years. Any vehicles not subject to Tier 3 PM standards during the phase-in period must continue to comply with the PM standards in § 86.1816–08. Paragraph (b)(7) of this section describes how to transition to Tier 3 standards for emissions other than PM. The following provisions describe the primary approach for phasing in the Tier 3 PM standards:

(i) You must meet the FTP emission standard for PM with 20, 40, 70, and 100 percent of your projected nationwide sales of all vehicles subject to this section in model years 2018 through 2021, respectively. Each vehicle meeting the Tier 3 FTP standard for PM must also meet the Tier 3 HD–SFTP standard for PM.

(ii) You may disregard the phase-in percentages specified in paragraph (b)(6)(i) of this section if you instead comply with an indexed PM phase-in schedule as described in this paragraph (b)(6)(ii). To do this, you must notify us of your intent before January 1, 2018, and include a detailed plan for complying with the indexed phase-in schedule. You comply with the indexed phase-in schedule by calculating a PM phase-in index at or above 440 using the following equation for model years 2018 through 2021:

$$\text{PM phase-in index} = 4 \cdot APP_{2018} + 3 \cdot APP_{2019} + 2 \cdot APP_{2020} + APP_{2021}$$

Where:

APP = The actual phase-in percentage of vehicles meeting the Tier 3 PM standards for the indicated model year, based on actual sales, as described in paragraph (b)(6)(i) of this section.

(iii) You may alternatively ask us to approve calculation of the annual percentage for a given model year based on production volumes instead of sales volumes.

(iv) Vehicles meeting the Tier 3 PM standards must meet those standards over the useful life as specified in § 86.1805–17. Note that Interim Tier 3 vehicles may have different useful life values for PM emission standards than for other emission standards.

(v) Measure PM emissions from all vehicles using the same test fuel used for measuring NMOG+NO_X emissions.

(vi) You may certify Interim Tier 3 vehicles based on carryover data.

(vii) You may use the alternative phase-in provisions described in paragraph (b)(8) of this section to transition to the Tier 3 exhaust emission standards on a different schedule.

(7) The following provisions describe the primary approach for phasing in the Tier 3 standards other than PM in 2022 and earlier model years:

(i) The fleet-average FTP emission standard for NMOG+NO_X phases in over several years as described in this paragraph (b)(7)(i). You must identify

FELs as described in paragraph (b)(4) of this section and calculate a fleet-average emission level to show that you meet the FTP emission standard for NMOG+NO_X that applies for each model year. You may certify using transitional bin standards specified in Table 5 of this section through model year 2021; include these vehicles in the fleet-average calculation by treating the sum of the NMOG and NO_X emission standards as the Family Emission Limit under § 86.1860. You may alternatively use the E0 test fuel specified in § 86.113 for vehicles certified to the transitional bins; the useful life period for these vehicles is 120,000 miles or 11 years. Fleet-average FTP emission standards decrease as shown in the following table:

TABLE 4 OF § 86.1816–18—DECLINING FLEET-AVERAGE FTP EMISSION STANDARDS FOR NMOG+NO_X

[g/mile]

Model year	Class 2b	Class 3
2016 [1]	0.333	0.548
2017 [1]	0.310	0.508
2018	0.278	0.451
2019	0.253	0.400
2020	0.228	0.349
2021	0.203	0.298
2022	0.178	0.247

[1] Fleet-average standards are shown for 2016 and 2017 for purposes of voluntary early compliance as described in paragraph (b)(10) of this section.

TABLE 5 OF § 86.1816–18—TRANSITIONAL TIER 3 FTP BIN STANDARDS

[g/mile] [1]

Class	FEL name	NMOG	NO_X	PM	CO	Formaldehyde
2b	Bin 395	0.195	0.200	0.012	6.4	0.032
	Bin 340	0.140	0.200	0.012	6.4	0.032
3	Bin 630	0.230	0.400	0.012	7.3	0.040
	Bin 570	0.170	0.400	0.012	7.3	0.040

[1] Vehicles certified to Transitional Tier 3 FTP bins are not subject to HD–SFTP standards.

(ii) You may use the alternative phase-in provisions described in paragraph (b)(8) of this section to transition to the Tier 3 exhaust emission standards on a different schedule.

(8) This paragraph (b)(8) describes an alternative approach to phasing in all the Tier 3 emission standards. If you choose this approach, you must phase in the Tier 3 standards for all your vehicles subject to this section according to this schedule. You may meet the standards specified in paragraph (b)(2) of this section according to the phase-in schedule specified in Table 6 of this section based on the indicated percentage of your projected nationwide sales in each model year. These vehicles must meet the applicable FTP emission standard for CO and the HD–SFTP emissions standards for NMOG+NO_X and CO that apply for Class 2b Bin 170 and Class 3 Bin 230 as described in paragraph (b)(4) of this section. You may use averaging, banking, and trading relative to the Tier 3 FTP emission standard for NMOG+NO_X during the phase-in period, but only if all the vehicles certified under § 86.1816–08 have FELs that are at or below the applicable NMHC and NO_X standards. Any vehicles not subject to Tier 3 standards during the phase-in period must continue to comply with the gaseous exhaust emission standards in § 86.1816–08. Each vehicle counting toward the PM phase-in percentage under this paragraph (b)(8) in model years 2019 and 2020 must also be included in the portion of the fleet meeting the Tier 3 standards for pollutants other than PM. Each vehicle counting toward the phase-in percentage for any pollutant must use the Tier 3 test fuel specified in § 86.113–07. To generate emission credits during the phase-in period, all pre-Tier 3 vehicles must have FELs at or below the NO_X and NMHC standards in § 86.1816–08. Determine emission credits by calculating fleet-average emission levels for Tier 3 and pre-Tier 3 vehicles together; for pre-Tier 3 vehicles use an NMOG+NO_X equivalent FEL of 0.395 g/mile for Class 2b vehicles and 0.630 g/mile for Class 3 vehicles. You may optionally meet the Tier 3 standards before model year 2019.

TABLE 6 OF § 86.1816–18

[Alternative Phase-In Schedule]

Model year	Class 2b		Class 3	
	PM	Other than PM (percent)	PM	Other than PM (percent)
2019	40	65	40	60
2020	70	77	70	73
2021	100	88	100	87
2022	100	100	100	100

(9) You may not use credits generated from vehicles certified under § 86.1816–08 for demonstrating compliance with the Tier 3 standards.

(10) [Reserved]

(11) You may voluntarily certify your vehicles under this section in model years 2016 and 2017. If you do this, the fleet-average FTP emission standards for NMOG+NO_X apply to all your complete heavy-duty vehicles at or below 14,000 pounds GVWR as specified in paragraph (b)(7)(i) of this section. Use any of the available bin standards as described in this section. Vehicles certified under

this paragraph (b)(10) must comply with the PM standards specified in § 86.1816–08 instead of the Tier 3 p.m. standards specified in this section.

(12) Keep records as needed to show that you meet the requirements specified in this paragraph (b) for phasing in standards and for complying with declining fleet-average average standards.

(c) Highway NMOG+NO_X exhaust emission standard. NMOG+NO_X emissions measured on the highway test cycle in 40 CFR part 600, subpart B, may not exceed the applicable NMOG+NO_X bin standard for FTP testing. Demonstrate compliance with this standard for low-mileage vehicles by applying the appropriate deterioration factor.

(d) *Provisions for Otto-cycle engines.* The special provisions described in § 86.1811–17(d) apply to vehicles with Otto-cycle engines that are certified under this section.

(e) *Small-volume manufacturers.* Small-volume manufacturers meeting the eligibility requirements in § 86.1838 may delay complying with the requirements in this section until model year 2022. This also applies for continuing to use the E0 test fuel specified in § 86.113 through model year 2021. If meeting the Tier 3 standards in model year 2022 would cause severe economic hardship, such manufacturers may ask us to approve an extended compliance deadline under the provisions of 40 CFR 1068.250, except that the solvency criterion does not apply and there is no maximum duration of the hardship relief.

■ 163. Section § 86.1817–08 is amended by revising the introductory text to read as follows:

§ 86.1817–08 Complete heavy-duty vehicle averaging, trading, and banking program.

Section 86.1817–08 includes text that specifies requirements that differ from § 86.1817–05. Where a paragraph in § 86.1817–05 is identical and applicable to § 86.1817–08, this may be indicated by specifying the corresponding paragraph and the statement ''[Reserved]. For guidance see § 86.1817–05.'' This section does not apply for NO_X or NMOG+NO_X emissions for vehicles certified to the Tier 3 standards in § 86.1816–18, including those vehicles that certify to the Tier 3 standards before model year 2018.

* * * * *

■ 164. Section 86.1818–12 is amended by revising paragraph (a) to read as follows:

§ 86.1818–12 Greenhouse gas emission standards for light-duty vehicles, light-duty trucks, and medium-duty passenger vehicles.

(a) *Applicability.* (1) This section contains standards and other regulations applicable to the emission of the air pollutant defined as the aggregate group of six greenhouse gases: Carbon dioxide, nitrous oxide, methane, hydrofluorocarbons, perfluorocarbons, and sulfur hexafluoride. This section applies to 2012 and later model year LDVs, LDTs and MDPVs, including multi-fuel vehicles, vehicles fueled with alternative fuels, hybrid electric vehicles, plug-in hybrid electric vehicles, electric vehicles, and fuel cell vehicles. Unless otherwise specified, multi-fuel vehicles must comply with all requirements established for each consumed fuel. The provisions of this section, except paragraph (c), also apply to clean alternative fuel conversions as defined in 40 CFR 85.502, of all model year light-duty vehicles, light-duty trucks, and medium-duty passenger vehicles. Manufacturers that qualify as a small business according to the requirements of § 86.1801–12(j) are exempt from the emission standards in this section. Manufacturers that have submitted a declaration for a model year according to the requirements of § 86.1801–12(k) for which approval has been granted by the Administrator are conditionally exempt from the emission standards in paragraphs (c) through (e) of this section for the approved model year.

(2) The standards specified in this section apply only for testing at low-altitude conditions. However, manufacturers must submit an engineering evaluation indicating that common calibration approaches are utilized at high altitude. Any deviation from low altitude emission control practices must be included in the auxiliary emission control device (AECD) descriptions submitted at certification. Any AECD specific to high altitude requires engineering emission data for EPA evaluation to quantify any emission impact and determine the validity of the AECD.

* * * * *

■ 165. Section § 86.1821–01 is amended by adding paragraph (f) to read as follows:

§ 86.1821–01 Evaporative/refueling family determination.

* * * * *

(f) For vehicles to be classed in the same leak family, they must be similar with respect to the items listed in paragraph (b) of this section and use the same OBD method for detecting leaks.

■ 166. Section § 86.1823–08 is amended by revising paragraph (g) to read as follows:

§ 86.1823–08 Durability demonstration procedures for exhaust emissions.

* * * * *

(g) *Emission component durability.* The manufacturer shall use good engineering judgment to determine that all emission-related components are designed to operate properly for the full useful life of the vehicles in actual use.

* * * * *

■ 167. Section § 86.1824–08 is amended by revising paragraphs (a), (f)(1), and (h) to read as follows:

§ 86.1824–08 Durability demonstration procedures for evaporative emissions.

* * * * *

(a) *Durability program objective.* The durability program must predict an expected in-use emission deterioration rate and emission level that effectively represents a significant majority of the distribution of emission levels and deterioration in actual use over the full useful life of candidate in-use vehicles of each vehicle design which uses the durability program. This requirement applies for all SHED-based measurements. It does not apply for spitback or leak standards.

* * * * *

(f) * * *

(1) For gasoline fueled vehicles certified to meet the evaporative emission standards set forth in this subpart, any mileage accumulation method for evaporative emissions must employ gasoline fuel for the entire mileage accumulation period which contains ethanol in, at least, the highest concentration permissible in gasoline under federal law and that is commercially available in any state in the United States. Unless otherwise approved by the Administrator, the manufacturer must determine the appropriate ethanol concentration by selecting the highest legal concentration commercially available during the calendar year before the one in which the manufacturer begins its mileage accumulation. The manufacturer must also provide information acceptable to the Administrator to indicate that the mileage accumulation method is of sufficient design, duration and severity to stabilize the permeability of all non-metallic fuel and evaporative system components to the mileage accumulation fuel constituents.

* * * * *

(h) *Emission component durability.* The manufacturer shall use good engineering judgment to determine that all emission-related components are

designed to operate properly for the full useful life of the vehicles in actual use.

* * * * *

■ 168. Section § 86.1825–08 is amended by revising paragraph (h) to read as follows:

§ 86.1825–08 Durability demonstration procedures for refueling emissions.

* * * * *

(h) *Emission component durability.* The manufacturer shall use good engineering judgment to determine that all emission-related components are designed to operate properly for the full useful life of the vehicles in actual use.

* * * * *

■ 169. Section § 86.1826–01 is revised to read as follows:

§ 86.1826–01 Assigned deterioration factors for small-volume manufacturers and small-volume test groups.

(a) *Applicability.* This program is an option available for small-volume manufacturers and small-volume test groups as described in § 86.1838.

(b) *Determination of deterioration factors.* No service accumulation method or vehicle/component selection method is required. Deterioration factors for all types of regulated emissions are assigned using the provisions in this paragraph (b). A separate assigned deterioration factor is required for each durability group. Manufacturers shall use good engineering judgment in applying deterioration factors. Manufacturers may use assigned deterioration factors that the Administrator determines and prescribes.

(1) The deterioration factors will be the Administrator's estimate, periodically updated and published in a guidance document, of the 70th percentile deterioration factors calculated using the industry-wide database of previously completed durability data vehicles or engines used for certification.

(2) The Administrator may use discretion to develop assigned deterioration factors using alternative methods if there is insufficient information to calculate an appropriate industry-wide deterioration factor (for example: A new engine technology coupled with a proven emission control system). These methods may include the use of assigned deterioration factors based on similar durability vehicles.

(3) Alternatively, with advance approval from the Administrator, a manufacturer may use deterioration factors developed by another manufacturer. The manufacturer seeking to use these deterioration factors must—

(i) Demonstrate that the engines from the two manufacturers share technical parameters to the degree that would support the conclusion that a common deterioration factor should apply for both vehicle configurations as defined in § 86.1803.

(ii) Provide supporting information, such as histograms of exhaust temperature data, comparisons of vehicle weight and road load horsepower, or comparisons of powertrains and emission control systems.

■ 170. Section 86.1828–01 is amended by removing and reserving paragraph (d) and adding paragraph (g) to read as follows:

§ 86.1828–01 Emission data vehicle selection.

* * * * *

(g) *Cold temperature NMHC testing.* For cold temperature NMHC exhaust emission compliance for each durability group, the manufacturer must select the vehicle expected to emit the highest NMHC emissions at 20 °F on candidate in-use vehicles from the test vehicles specified in paragraph (a) of this section. When the expected worst-case cold temperature NMHC vehicle is also the expected worst-case cold temperature CO vehicle as selected in paragraph (c) of this section, then cold testing is required only for that vehicle; otherwise, testing is required for both the worst-case cold temperature CO vehicle and the worst-case cold temperature NMHC vehicle.

■ 171. Section 86.1829–01 is amended as follows:

■ a. By removing and reserving paragraph (b)(1)(iii)(C).

■ b. By revising paragraph (b)(2)(i).

■ c. By adding paragraph (b)(2)(iv).

■ d. By revising paragraph (b)(4).

■ f. By removing and reserving paragraph (d).

§ 86.1829–01 Durability and emission testing requirements; waivers.

* * * * *

(b) * * *

(2) * * *

(i) *Testing at low altitude.* One EDV in each evaporative/refueling family and evaporative/refueling emission control system combination must be tested in accordance with the evaporative/refueling test procedure requirement of subpart B of this part. The configuration of the EDV will be determined under the provisions of § 86.1828–01. The EDV must also be tested for exhaust emission compliance using the FTP and SFTP procedures of subpart B of this part. In lieu of testing natural gas or hydrogen fueled vehicles to demonstrate compliance with the evaporative and refueling emission standards specified in this subpart, a manufacturer may provide a statement in its application for certification that, based on the manufacturer's engineering evaluation of appropriate testing and/or design parameters, all light-duty vehicles, light-duty trucks, and complete heavy-duty vehicles comply with applicable emission standards. This same testing exemption applies for vehicles fueled by liquefied petroleum gas, except that refueling tests are required for systems that allow venting during the refueling operation.

* * * * *

(iv) For diesel-fueled vehicles, a manufacturer may provide a statement in the application for certification that vehicles comply with the refueling emission standard instead of submitting test data. Such a statement must be based on previous emission tests, development tests, or other appropriate information, and good engineering judgment.

* * * * *

(4) *Electric vehicles and fuel cell vehicles.* For electric vehicles and fuel cell vehicles, manufacturers may provide a statement in the application for certification that vehicles comply with all the requirements of this subpart instead of submitting test data. Such a statement must be based on previous emission tests, development tests, or other appropriate information, and good engineering judgment.

* * * * *

■ 172. A new § 86.1829–17 is added to subpart S to read as follows:

§ 86.1829–17 Durability and emission testing requirements; waivers.

This section describes general testing requirements for certifying vehicles under this subpart, and includes several provisions allowing for statements of compliance instead of testing in certain circumstances. Where a manufacturer provides a statement instead of test data under this section, it must be based on previous emission tests, development tests, or other appropriate information, and good engineering judgment.

(a) One durability demonstration is required for each durability group. The configuration of the DDV is determined according to § 86.1822. The DDV shall be tested and accumulate service mileage according to the provisions of §§ 86.1823, 86.1824, 86.1825, and 86.1831. Small volume manufacturers and small volume test groups may optionally use the alternative durability provisions of § 86.1838.

(b) The manufacturer must test EDVs as follows to demonstrate compliance with emission standards:

(1) Test one EDV in each durability group using the test procedures in 40 CFR part 1066 to demonstrate compliance with cold temperature CO and NMHC exhaust emission standards.

(2) Test one EDV in each test group using the FTP and SFTP test procedures in 40 CFR part 1066 and the HFET test procedures of 40 CFR part 600, subpart B, to demonstrate compliance with other exhaust emission standards.

(3) Test one EDV in each evaporative/refueling family and evaporative/refueling emission control system combination using the test procedures in subpart B of this part to demonstrate compliance with evaporative and refueling emission standards.

(c) The manufacturer must demonstrate compliance with emission standards at low-altitude conditions as described in paragraph (b) of this section. For standards that apply at high-altitude conditions, the manufacturer may either perform the same tests or provide a statement in the application for certification that, based on an engineering evaluation of appropriate testing to measure or simulate high-altitude emissions, all vehicles comply with applicable emission standards at high altitude.

(d) Manufacturers may omit exhaust testing for certification in certain circumstances as follows:

(1) For vehicles subject to the Tier 3 p.m. standards in §§ 86.1811, a manufacturer may provide a statement in the application for certification that vehicles comply with applicable PM standards instead of submitting PM test data for a certain number of vehicles as follows:

(i) Except as noted in paragraph (d)(1)(ii) of this section, manufacturers must submit PM test data for at least 25 percent of its durability data groups that are subject to the Tier 3 p.m. standards in § 86.1811–17. For example, if a manufacturer has a mix of light-duty vehicles and light-duty trucks divided over a total of nine durability data groups in a given model year, three of them would need PM data for certification in that model year. EPA will work with the manufacturer to select durability data groups for testing, with the general expectation that testing will rotate to cover all of a manufacturer's product line over time. If a durability data group has been certified in an earlier model year based on submitted PM data, and that durability data group is eligible for certification using carryover test data, that carryover data may count toward meeting the requirements of this paragraph (d)(1)(i), subject to the selection of durability data groups.

(ii) In every model year that manufacturers have only one or two durability data groups subject to the Tier 3 p.m. standards, they must submit PM test data for certifying all their durability data groups. If manufacturers have three durability data groups subject to the Tier 3 p.m. standards in a given model year, they must submit PM test data for at least two of those durability data groups.

(2) Small-volume manufacturers may provide a statement in the application for certification that vehicles comply with the applicable PM standard instead of submitting test data.

(3) Manufacturers may omit PM measurements for fuel economy and GHG testing conducted in addition to the testing needed to demonstrate compliance with the PM emission standards.

(4) Manufacturers may provide a statement in the application for certification that vehicles comply with the applicable formaldehyde standard instead of submitting test data.

(5) When conducting Selective Enforcement Audit testing, a manufacturer may petition the Administrator to waive the requirement to measure PM emissions and formaldehyde emissions.

(e) Manufacturers may omit evaporative or refueling testing for certification in certain circumstances as follows:

(1) For diesel-fueled vehicles, a manufacturer may provide a statement in the application for certification that vehicles comply with the refueling emission standard instead of submitting test data.

(2) For vehicles fueled by natural gas, a manufacturer may provide a statement in the application for certification that vehicles comply with evaporative emission standards instead of submitting test data. Vehicles fueled by liquefied petroleum gas are similarly exempted from submitting test data for the evaporative and refueling emission standards, except that refueling tests are required for systems that allow venting during the refueling operation.

(3) Manufacturers may provide a statement in the application for certification that vehicles comply with the leak standard in § 86.1813 instead of submitting test data.

(4) For vehicles certified to the refueling emission standards in §§ 86.1811 or 86.1813, a manufacturer may provide a statement in the application for certification that vehicles comply with the fuel dispensing spitback standard instead of submitting test data.

(5) In lieu of testing vehicles for the supplemental two-diurnal test sequence, a manufacturer may optionally provide a statement of compliance in its application for certification that, based on the manufacturer's good engineering judgment, all vehicles in the evaporative/refueling emission family comply with the evaporative emission standard for the supplemental two-diurnal test sequence.

(i) The option to provide a statement of compliance in lieu of 2-diurnal evaporative certification test data is limited to vehicles with conventional evaporative emission control systems (as determined by the Administrator). EPA may perform confirmatory 2-diurnal evaporative emission testing on test vehicles certified using this option. If data shows noncompliance, it will be addressed through § 86.1851. Also, if data shows noncompliance, EPA will generally disallow subsequent waivers for the applicable evaporative family.

(ii) Manufacturers shall supply information if requested by EPA in support of the statement of compliance described in this paragraph (d)(12). This information shall include evaporative calibration information for the emission-data vehicle and for other vehicles in the evaporative/refueling family, including, but not limited to, canister type, canister volume, canister working capacity, fuel tank volume, fuel tank geometry, the type of fuel delivery system (return, returnless, variable flow fuel pump, etc.), a description of the input parameters and software strategy used to control the evaporative canister purge, the nominal purge flow volume (in bed volumes) when vehicles are driven over the 2-diurnal (FTP) driving cycle, the nominal purge flow volume (in bed volumes) when vehicles are driven over the 3-diurnal (FTP + running loss) driving cycle, and other supporting information as necessary to demonstrate that the purge flow rate calibration on the 2-diurnal test sequence is adequate to comply with the evaporative emission standard for the supplemental two-diurnal test sequence.

(6) Where a California evaporative emission standard is at least as stringent as a comparable federal evaporative emission standard for a vehicle, we may accept test data demonstrating compliance with the California standard as demonstrating compliance with the comparable standard under this subpart. We may require you to provide test data clearly demonstrating that a vehicle tested using the California-specified test procedures will meet the comparable standard under this subpart when tested

using the test procedures specified in this part.

(7) Through model year 2019, we may accept test data demonstrating compliance with the California refueling emission standard as demonstrating compliance with the analogous refueling emission standard under this subpart if all the following conditions apply:

(i) You certified the vehicles in model year 2016 to California's refueling emission standards.

(ii) You are certifying the vehicles to refueling standards for the new model year based on carryover data instead of performing new testing.

(iii) You are also certifying the vehicles for evaporative emissions based on California test procedures under the provisions of paragraph (e)(6) of this section,

(f) For electric vehicles and fuel cell vehicles, manufacturers may provide a statement in the application for certification that vehicles comply with all the requirements of this subpart instead of submitting test data.

■ 173. Section 86.1837–01 is amended by revising paragraph (a) to read as follows:

§ 86.1837–01 Rounding of emission measurements.

(a) Unless otherwise specified, the results of all emission tests shall be rounded to the number of places to the right of the decimal point indicated by expressing the applicable emission standard of this subpart to one additional significant figure, in accordance with 40 CFR 1065.20.

* * * * *

■ 174. Section 86.1838–01 is revised to read as follows:

§ 86.1838–01 Small-volume manufacturer certification procedures.

(a) The small-volume manufacturer certification procedures described in paragraphs (b) and (c) of this section are optional. Small-volume manufacturers may use these optional procedures to demonstrate compliance with the general standards and specific emission requirements contained in this subpart.

(b) *Eligibility requirements*—(1) *Small-volume manufacturers.* (i) Optional small-volume manufacturer certification procedures apply for vehicles produced by manufacturers with the following number of combined sales of vehicles subject to standards under this subpart in all states and territories of the United States in the model year for which certification is sought, including all vehicles and engines imported under the provisions of 40 CFR 85.1505 and 85.1509:

(A) 5,000 units for the Tier 3 standards described in §§ 86.1811–17, 86.1813–17, and 86.1816–18. This is based on average nationwide sales volumes for model years 2012 through 2014 for manufacturers that sell vehicles in model year 2012. The provision allowing delayed compliance with the Tier 3 standards applies for qualifying companies even if sales after model year 2014 increase beyond 5,000 units. Manufacturers with no sales in model year 2012 may instead rely on projected sales volumes; however, if nationwide sales exceed an average value of 5,000 units in any three consecutive model years, the manufacturer is no longer eligible for provisions that apply to small-volume manufacturers after two additional model years. For example, if actual sales in model years 2015 through 2017 exceed 5,000 units, the small-volume provisions would no longer apply starting in model year 2020.

(B) 15,000 units for all other requirements.

(ii) If a manufacturer's aggregated sales in the United States, as determined in paragraph (b)(3) of this section are fewer than the number of units specified in paragraph (b)(1)(i) of this section, the manufacturer (or each manufacturer in the case of manufacturers in an aggregated relationship) may certify under the provisions of paragraph (c) of this section.

(iii) A manufacturers that qualifies as a small business under the Small Business Administration regulations in 13 CFR part 121 is eligible for all the provisions that apply for small-volume manufacturers under this subpart. See § 86.1801–12(j) to determine whether companies qualify as small businesses.

(iv) The sales volumes specified in this section are based on actual sales, unless otherwise specified.

(v) Except for delayed implementation of new emission standards, an eligible manufacturer must transition out of the special provisions that apply for small-volume manufacturers as described in § 86.1801–12(k)(2)(i) through (iii) if sales volumes increase above the applicable threshold.

(2) *Small-volume test groups.* (i) If the aggregated sales in all states and territories of the United States, as determined in paragraph (b)(3) of this section are equal to or greater than 15,000 units, then the manufacturer (or each manufacturer in the case of manufacturers in an aggregated relationship) will be allowed to certify a number of units under the small-volume test group certification procedures in accordance with the criteria identified in paragraphs (b)(2)(ii) through (iv) of this section.

(ii) If there are no additional manufacturers in an aggregated relationship meeting the provisions of paragraph (b)(3) of this section, then the manufacturer may certify whole test groups whose total aggregated sales (including heavy-duty engines) are less than 15,000 units using the small-volume provisions of paragraph (c) of this section.

(iii) If there is an aggregated relationship with another manufacturer which satisfies the provisions of paragraph (b)(3) of this section, then the following provisions shall apply:

(A) If none of the manufacturers own 50 percent or more of another manufacturer in the aggregated relationship, then each manufacturer may certify whole test groups whose total aggregated sales (including heavy-duty engines) are less than 15,000 units using the small-volume provisions of paragraph (c) of this section.

(B) If any of the manufacturers own 50 percent or more of another manufacturer in the aggregated relationship, then the limit of 14,999 units must be shared among the manufacturers in such a relationship. In total for all the manufacturers involved in such a relationship, aggregated sales (including heavy-duty engines) of up to 14,999 units may be certified using the small-volume provisions of paragraph (c) of this section. Only whole test groups shall be eligible for small-volume status under paragraph (c) of this section.

(iv) In the case of a joint venture arrangement (50/50 ownership) between two manufacturers, each manufacturer retains its eligibility for 14,999 units under the small-volume test group certification procedures, but the joint venture must draw its maximum 14,999 units from the units allocated to its parent manufacturers. Only whole test groups shall be eligible for small-volume status under paragraph (c) of this section.

(3) *Sales aggregation for related manufacturers.* The projected or actual sales from different firms shall be aggregated in the following situations:

(i) Vehicles and/or engines produced by two or more firms, one of which is 10 percent or greater part owned by another;

(ii) Vehicles and/or engines produced by any two or more firms if a third party has equity ownership of 10 percent or more in each of the firms;

(iii) Vehicles and/or engines produced by two or more firms having a common corporate officer(s) who is (are) responsible for the overall direction of the companies;

(iv) Vehicles and/or engines imported or distributed by all firms where the vehicles and/or engines are manufactured by the same entity and the importer or distributor is an authorized agent of the entity.

(c) Small-volume manufacturers and small-volume test groups shall demonstrate compliance with all applicable sections of this subpart, except as provided in paragraphs (c)(1) and (2) of this section. Small-volume manufacturers and small-volume test groups may optionally meet the following requirements:

(1) *Durability demonstration.* Use the provisions of § 86.1826 rather than the requirements of §§ 86.1823, 86.1824, and 86.1825.

(2) *In-use verification testing. Requirements for testing in-use vehicles apply as described in* § 86.1845, subject to the following additional provisions for small-volume manufacturers and small-volume test groups:

(i) Small-volume in-use verification test vehicles may be procured from customers or may be owned by, or under the control of the manufacturer, provided that the vehicle has accumulated mileage in typical operation on public streets and has received typical maintenance.

(ii) In lieu of procuring small-volume in-use verification test vehicles that have a minimum odometer reading of 50,000 miles, a manufacturer may demonstrate to the satisfaction of the Agency that, based on owner survey data, the average mileage accumulated after 4 years for a given test group is less than 50,000 miles. The Agency may approve a lower minimum odometer reading based on such data.

(iii) The provisions of § 86.1845–04(c)(2) that require one vehicle of each test group during high mileage in-use verification testing to have a minimum odometer mileage do not apply.

(iv) Manufacturers intending to use the provisions of paragraphs (c)(2)(i) or (ii) of this section shall submit to the Agency, prior to the certification of the subject vehicles, a plan detailing how these provisions will be met.

■ 175. Section 86.1843–01 is amended by revising paragraph (g) to read as follows:

§ 86.1843–01 General information requirements.

* * * * *

(g) *Recordkeeping.* (1) This subpart includes various requirements to record data or other information. Unless we specify otherwise, store these records in any format and on any media and keep them readily available for eight years after you send an associated application for certification, or eight years after you generate the data if they do not support an application for certification. You must promptly send us organized, written records in English upon request. We may review them at any time.

(2) Upon written request by the Administrator, a manufacturer shall submit any information as described in § 86.1844–01 within 15 business days. A manufacturer may request the Administrator to grant an extension. The request must clearly indicate the circumstances necessitating the extension.

* * * * *

■ 176. Section 86.1844–01 is amended by revising paragraphs (a), (d)(7), (d)(8), (d)(9), (d)(11), and (d)(16)(i) introductory text, removing paragraph (d)(16)(iv), and adding paragraph (e)(7) to read as follows:

§ 86.1844–01 Information requirements: Application for certification and submittal of information upon request.

(a) All the information listed in this section must be submitted to the Agency according to the requirements specified in § 86.1843; however, we may ask you to include less information than we specify, as long as you keep the specified records.

* * * * *

(d) * * *

(7) A comprehensive list of all test results, including official certification levels, and the applicable intermediate and full useful life emission standards to which the test group is to be certified as required in § 86.1829–01. Also include a comparison of drive cycle energy and target cycle energy relative to both inertia and road load forces as specified in 40 CFR 1066.430 for each drive cycle or test phase, as appropriate.

(8) A statement that all applicable vehicles will conform to the emission standards for which emission data is not being provided, as allowed under § 86.1806 or § 86.1829. The statement shall clearly identify the standards for which emission testing was not completed.

(9) Information describing each emission control diagnostic system required by § 86.1806, including all of the following:

(i) A description of the functional operation characteristics of the diagnostic system, with additional information demonstrating that the system meets the requirements specified in § 86.1806. Include all testing and demonstration data submitted to the California Air Resources Board for certification.

(ii) The general method of detecting malfunctions for each emission-related powertrain component.

(iii) Any deficiencies, including resolution plans and schedules.

(iv) A statement that the diagnostic system is adequate for the performance warranty test described in 40 CFR part 85, subpart W.

(v) For vehicles certified to meet the leak standard in § 86.1813, a description of the anticipated test procedure. The description must include, at a minimum, a method for accessing the fuel system for measurements, and a method for pressurizing the fuel system to perform the procedure specified in 40 CFR 1066.840 without involving the fuel cap or filler neck.

* * * * *

(11) A list of all auxiliary emission control devices (AECD) installed on any applicable vehicles, including a justification for each AECD, the parameters they sense and control, a detailed justification of each AECD that results in a reduction in effectiveness of the emission control system, and rationale for why it is not a defeat device as defined under § 86.1809. The following specific provisions apply for AECDs:

(i) For any AECD uniquely used at high altitudes, EPA may request engineering emission data to quantify any emission impact and validity of the AECD.

(ii) For any AECD uniquely used on multi-fuel vehicles when operated on fuels other than gasoline, EPA may request engineering emission data to quantify any emission impact and validity of the AECD.

(iii) For Tier 3 vehicles with spark-ignition engines, describe how AECDs are designed to comply with the requirements of § 86.1811–17(d). Identify which components need protection through enrichment strategies; describe the temperature limitations for those components; and describe how the enrichment strategy corresponds to those temperature limitations. We may also require manufacturers to submit this information for certification related to Tier 2 vehicles.

* * * * *

(16) * * *

(i) A statement indicating that the manufacturer has conducted an engineering analysis of the complete exhaust system to ensure that the exhaust system has been designed:

* * * * *

(e) * * *

(7) The results of any production vehicle evaluation testing required for OBD systems under § 86.1806.

* * * * *

§ 86.1845–01 [Removed]

■ 177. Remove § 86.1845–01.

■ 178. Section 86.1845–04 is amended by revising paragraphs (a)(3), (b)(3) introductory text, (b)(4), (b)(5), (b)(6), (b)(7), and (c) to read as follows:

§ 86.1845–04 Manufacturer in-use verification testing requirements.

(a) * * *

(3) The following provisions apply regarding the possibility of residual effects from varying fuel sulfur levels:

(i) Vehicles certified to Tier 3 standards under § 86.1811 must always measure emissions over the FTP, then over the HFET (if applicable), then over the US06 portion of the SFTP. If a Tier 3 vehicle meets all the applicable emission standards except the FTP or HFET emission standard for $NMOG+NO_X$, and a fuel sample from the tested vehicle (representing the as-received condition) has a measured fuel sulfur level exceeding 15 ppm when measured as described in 40 CFR 1065.710, the manufacturer may repeat the FTP and HFET measurements and use the new emission values as the official results for that vehicle. For all other cases of testing Tier 3 vehicles, measured emission levels from the first test will be considered the official results for the test vehicle, regardless of any test results from additional test runs. Where repeat testing is allowed, the vehicle may operate for up to two US06 cycles (with or without measurement) before repeating the FTP and HFET measurements. The repeat measurements must include both FTP and HFET, even if the vehicle failed only one of those tests, unless the HFET is not required for a particular vehicle. Tier 3 vehicles may not undergo any other vehicle preconditioning to eliminate fuel sulfur effects on the emission control system, unless we approve it in advance.

(ii) Upon a manufacturer's written request, prior to in-use testing, that presents information to EPA regarding pre-conditioning procedures designed solely to remove the effects of high sulfur in gasoline from vehicles produced through the 2007 model year, EPA will consider allowing such procedures on a case-by-case basis. EPA's decision will apply to manufacturer in-use testing conducted under this section and to any in-use testing conducted by EPA. Such procedures are not available for complete HDVs. For model year 2007 and later Tier 2 vehicles, this provision can be used only in American Samoa, Guam, and the Commonwealth of the Northern Mariana Islands, and then only if low sulfur gasoline is determined by the Administrator to be unavailable in that specific location.

(b) * * *

(3) *Number of test vehicles.* For each test group, the minimum number of vehicles that must be tested is specified in Table S04–06 and Table S04–07 of this paragraph (b)(3). After testing the minimum number of vehicles of a specific test group as specified in Table S04–06 or S04–07 of this paragraph (b)(3), a manufacturer may test additional vehicles upon request and approval by the Agency prior to the initiation of the additional testing. Any additional testing must be completed within the testing completion requirements shown in § 86.1845–04(b)(4). The request and Agency approval (if any) shall apply to test groups on a case by case basis and apply only to testing under this paragraph. Separate approval will be required to test additional vehicles under paragraph (c) of this section. In addition to any testing that is required under Table S04–06 and Table S04–07, a manufacturer shall test one vehicle from each evaporative/refueling family for evaporative/refueling emissions. If a manufacturer believes it is unable to procure the test vehicles necessary to test the required number of vehicles in a test group, the manufacturer may request, subject to Administrator approval, a decreased sample size for that test group. The request shall include a description of the methods the manufacturer has used to procure the required number of vehicles. The approval of any such request, and the substitution of an alternative sample size requirement for the test group, will be based on a review of the procurement efforts made by the manufacturer to determine if all reasonable steps have been taken to procure the required test group size. Tables S04–06 and S04–07 follow:

* * * * *

(4) *Completion of testing.* Testing of the vehicles in a test group and evaporative/refueling family must be completed within 12 months of the end of production of that test group (or evaporative/refueling family) for that model year.

(5) *Testing.* (i) Each test vehicle of a test group shall be tested in accordance with the Federal Test Procedure and the US06 portion of the Supplemental Federal Test Procedure as described in subpart B of this part, when such test vehicle is tested for compliance with applicable exhaust emission standards under this subpart. Test vehicles subject to applicable exhaust CO_2 emission standards under this subpart shall also be tested in accordance with the highway fuel economy test as described in part 600, subpart B, of this chapter.

(ii) Manufacturers must measure PM emissions over the FTP and US06 driving schedules for at least 50 percent of the vehicles tested under paragraph (b)(5)(i) of this section.

(iii) Starting with model year 2018 vehicles, manufacturers must demonstrate compliance with the Tier 3 leak standard specified in § 86.1813, if applicable, as described in this paragraph (b)(5)(iii). Manufacturers must evaluate each vehicle tested under paragraph (b)(5)(i) of this section. In addition, manufacturers must evaluate at least one vehicle from each leak family for a given model year. Manufacturers may rely on OBD monitoring instead of testing as follows:

(A) A vehicle is considered to pass the leak test if the OBD system completed a leak check within the previous 750 miles of driving without showing a leak fault code.

(B) Whether or not a vehicle's OBD system has completed a leak check within the previous 750 miles of driving, the manufacturer may operate the vehicle as needed to force the OBD system to perform a leak check. If the OBD leak check does not show a leak fault, the vehicle is considered to pass the leak test.

(C) If the most recent OBD leak check from paragraph (b)(5)(iii)(A) or (B) of this section shows a fault code, the vehicle is presumed to have failed the leak test. Manufacturers may perform the leak measurement procedure described in 40 CFR 1066.840 for an official result to replace the finding from the OBD leak check.

(D) Manufacturers may not perform repeat OBD checks or leak measurements to over-ride a failure under paragraph (b)(5)(iii)(C) of this section.

(iv) For non-gaseous fueled vehicles, one test vehicle of each evaporative/refueling family shall be tested in accordance with the supplemental 2-diurnal-plus-hot-soak evaporative emission and refueling emission procedures described in subpart B of this part, when such test vehicle is tested for compliance with applicable evaporative emission and refueling standards under this subpart. For gaseous fueled vehicles, one test vehicle of each evaporative/refueling family shall be tested in accordance with the 3-diurnal-plus-hot-soak evaporative emission and refueling emission

procedures described in subpart B of this part, when such test vehicle is tested for compliance with applicable evaporative emission and refueling standards under this subpart. The test vehicles tested to fulfill the evaporative/refueling testing requirement of this paragraph (b)(5)(ii) will be counted when determining compliance with the minimum number of vehicles as specified in Table S04–06 and Table S04–07 in paragraph (b)(3) of this section for testing under paragraph (b)(5)(i) of this section only if the vehicle is also tested for exhaust emissions under the requirements of paragraph (b)(5)(i) of this section.

(6) Each test vehicle not rejected based on the criteria specified in appendix II to this subpart shall be tested in as-received condition.

(7) A manufacturer may conduct subsequent diagnostic maintenance and/or testing of any vehicle. Any such maintenance and/or testing shall be reported to the Agency as specified in § 86.1847.

(c) *High-mileage testing*—(1) *Test groups.* Testing must be conducted for each test group.

(2) *Vehicle mileage.* All test vehicles must have a minimum odometer mileage of 50,000 miles. At least one vehicle of each test group must have a minimum odometer mileage of 105,000 miles or 75 percent of the full useful life mileage, whichever is less. See § 86.1838–01(c)(2) for small volume manufacturer mileage requirements.

(3) *Number of test vehicles.* For each test group, the minimum number of vehicles that must be tested is specified in Table S04–06 and Table S04–07 in paragraph (b)(3) of this section. After testing the minimum number of vehicles of a specific test group as specified in Table S04–06 and Table S04–07 in paragraph (b)(3) of this section, a manufacturer may test additional vehicles upon request and approval by the Agency prior to the initiation of the additional testing. Any additional testing must be completed within the testing completion requirements shown in § 86.1845–04(c)(4). The request and Agency approval (if any) shall apply to test groups on a case by case basis and apply only to testing under this paragraph (c). In addition to any testing that is required under Table S04–06 and Table S04–07, a manufacturer shall test one vehicle from each evaporative/refueling family for evaporative/refueling emissions. If a manufacturer believes it is unable to procure the test vehicles necessary to test the required number of vehicles in a test group as specified in Table S04–06 or Table S04–07, the manufacturer may request, subject to Administrator approval, a decreased sample size for that test group. The request shall include a description of the methods the manufacturer has used to procure the required number of vehicles. The approval of any such request, and the substitution of an alternative sample size requirement for the test group, will be based on a review of the procurement efforts made by the manufacturer to determine if all reasonable steps have been taken to procure the required test group size.

(4) *Initiation and completion of testing.* Testing of a test group (or evaporative refueling family) must commence within 4 years of the end of production of the test group (or evaporative/refueling family) and be completed within 5 years of the end of production of the test group (or evaporative/refueling family).

(5) *Testing.* (i) Each test vehicle shall be tested in accordance with the Federal Test Procedure and the US06 portion of the Supplemental Federal Test Procedure as described in subpart B of this part when such test vehicle is tested for compliance with applicable exhaust emission standards under this subpart. Test vehicles subject to applicable exhaust CO_2 emission standards under this subpart shall also be tested in accordance with the highway fuel economy test as described in part 600, subpart B of this chapter. One test vehicle from each test group shall receive a Federal Test Procedure at high altitude. The test vehicle tested at high altitude is not required to be one of the same test vehicles tested at low altitude. The test vehicle tested at high altitude is counted when determining the compliance with the requirements shown in Table S04–06 and Table S04–07 in paragraph (b)(3) of this section or the expanded sample size as provided for in this paragraph (c).

(ii) Manufacturers must measure PM emissions over the FTP and US06 driving schedules for at least 50 percent of the vehicles tested under paragraph (c)(5)(i) of this section.

(iii) Starting with model year 2018 vehicles, manufacturers must evaluate each vehicle tested under paragraph (c)(5)(i) of this section to demonstrate compliance with the Tier 3 leak standard specified in § 86.1813. In addition, manufacturers must evaluate at least one vehicle from each leak family for a given model year. Manufacturers may rely on OBD monitoring instead of testing as described in paragraph (c)(5)(iii) of this section.

(iv) For non-gaseous fueled vehicles, one test vehicle of each evaporative/refueling family shall be tested in accordance with the supplemental 2-diurnal-plus-hot-soak evaporative emission procedures described in subpart B of this part, when such test vehicle is tested for compliance with applicable evaporative emission and refueling standards under this subpart. For gaseous fueled vehicles, one test vehicle of each evaporative/refueling family shall be tested in accordance with the 3-diurnal-plus-hot-soak evaporative emission procedures described in subpart B of this part, when such test vehicle is tested for compliance with applicable evaporative emission and refueling standards under this subpart. The test vehicles tested to fulfill the evaporative/refueling testing requirement of this paragraph (b)(5)(ii) will be counted when determining compliance with the minimum number of vehicles as specified in Table S04–06 and table S04–07 in paragraph (b)(3) of this section for testing under paragraph (b)(5)(i) of this section only if the vehicle is also tested for exhaust emissions under the requirements of paragraph (b)(5)(i) of this section.

(6) *Test condition.* Each test vehicle not rejected based on the criteria specified in appendix II to this subpart shall be tested in as-received condition.

(7) *Diagnostic maintenance.* A manufacturer may conduct subsequent diagnostic maintenance and/or testing on any vehicle. Any such maintenance and/or testing shall be reported to the Agency as specified in § 86.1847–01.

* * * * *

■ 179. Section 86.1846–01 is revised to read as follows:

§ 86.1846–01 Manufacturer in-use confirmatory testing requirements.

(a) *General requirements.* (1) Manufacturers must test, or cause testing to be conducted, under this section when the emission levels shown by a test group sample from testing under § 86.1845 exceeds the criteria specified in paragraph (b) of this section. The testing required under this section applies separately to each test group and at each test point (low and high mileage) that meets the specified criteria. The testing requirements apply separately for each model year. These provisions apply to heavy-duty vehicles and heavy-duty engines starting with model year 2007. These provisions do not apply to emissions of CO_2, CH_4, and N_2O.

(2) [Reserved]

(3) [Reserved]

(4) The provisions of § 86.1845–04(a)(3) regarding fuel sulfur effects apply equally to testing under this section.

(b) *Criteria for additional testing.* (1) A manufacturer shall test a test group or a subset of a test group as described in paragraph (j) of this section when the results from testing conducted under § 86.1845 show mean exhaust emissions for that test group of any pollutant(s) (except CO_2, CH_4, and N_2O) to be equal to or greater than 1.30 times the applicable in-use standard and a failure rate, among the test group vehicles, for the corresponding pollutant(s) of fifty percent or greater.

(i) This requirement does not apply to Supplemental FTP testing or evaporative/refueling testing. Testing conducted at high altitude under the requirements of § 86.1845 will be included in determining if a test group meets the criteria triggering testing required under this section.

(ii) The vehicle tested under the requirements of § 86.1845–04(c)(2) with a minimum odometer miles of 75% of useful life will not be included in determining if a test group meets the triggering criteria.

(iii) The SFTP composite emission levels shall include the IUVP FTP emissions, the IUVP US06 emissions, and the values from the SC03 Air Conditioning EDV certification test (without DFs applied). The calculations shall be made using the equations prescribed in § 86.164. If more than one set of certification SC03 data exists (due to running change testing or other reasons), the manufacturer shall choose the SC03 result to use in the calculation from among those data sets using good engineering judgment.

(2) If fewer than 50 percent of the vehicles from a leak family pass the leak test under § 86.1845, EPA may require further leak testing under this paragraph (b)(2). Testing under this section must include five vehicles from the family. If all five of these vehicles fail the test, the manufacturer must test five additional vehicles.

EPA will determine whether to require further leak testing under this section after providing the manufacturer an opportunity to discuss the results, including consideration of any of the following information, or other items that may be relevant:

(i) Detailed system design, calibration, and operating information, technical explanations as to why the individual vehicles tested failed the leak emission standard.

(ii) Comparison of the subject vehicles to other similar models from the same manufacturer.

(iii) Data or other information on owner complaints, technical service bulletins, service campaigns, special policy warranty programs, warranty repair data, state I/M data, and data available from other manufacturer-specific programs or initiatives.

(iv) Evaporative emission test data on any individual vehicles that did not pass leak testing during IUVP.

(c) *Useful life.* Vehicles tested under the provisions of this section must be within the useful life specified for the emission standards which were exceeded in the testing under § 86.1845. Testing should be within the useful life specified, subject to sections 207(c)(5) and (c)(6) of the Clean Air Act where applicable.

(d) *Number of test vehicles.* A manufacturer must test a minimum of ten vehicles of the test group or Agency-designated subset. A manufacturer may, at the manufacturer's discretion, test more than ten vehicles under this paragraph for a specific test group or Agency-designated subset. If a manufacturer chooses to test more than the required ten vehicles, all testing must be completed within the time designated in the testing completion requirements of paragraph (g) of this section. Any vehicles which are eliminated from the sample either prior to or subsequent to testing, or any vehicles for which test results are determined to be void, must be replaced in order that the final sample of vehicles for which test results acceptable to the Agency are available equals a minimum of ten vehicles. A manufacturer may cease testing with a sample of five vehicles if the results of the first five vehicles tested show mean emissions for each pollutant to be less than 75.0 percent of the applicable standard, with no vehicles exceeding the applicable standard for any pollutant.

(e) *Emission testing.* Each test vehicle of a test group or Agency-designated subset shall be tested in accordance with the Federal Test Procedure and/or the Supplemental Federal Test Procedure (whichever of these tests performed under § 86.1845 produces emission levels requiring testing under this section) as described in subpart B of this part, when such test vehicle is tested for compliance with applicable exhaust emission standards under this subpart.

(f) *Geographical limitations.* (1) Test groups or Agency-designated subsets certified to 50-state standards: For low altitude testing no more than 50 percent of the test vehicles may be procured from California. The test vehicles procured from the 49 state area must be procured from a location with a heating degree day 30 year annual average equal to or greater than 4000.

(2) Test groups or Agency-designated subsets certified to 49 state standards: For low-altitude testing all vehicles shall be procured from a location with a heating degree day 30 year annual average equal to or greater than 4000.

(3) Vehicles procured for high altitude testing may be procured from any area provided that the vehicle's primary area of operation was above 4000 feet.

(g) *Testing.* Testing required under this section must commence within three months of completion of the testing under § 86.1845 which triggered the confirmatory testing and must be completed within seven months of the completion of the testing which triggered the confirmatory testing. Any industry review of the results obtained under § 86.1845 and any additional vehicle procurement and/or testing which takes place under the provisions of § 86.1845 which the industry believes may affect the triggering of required confirmatory testing must take place within the three month period. The data and the manufacturers reasoning for reconsideration of the data must be provided to the Agency within the three month period.

(h) *Limit on manufacturer conducted testing.* For each manufacturer, the maximum number of test group(s) (or Agency-designated subset(s)) of each model year for which testing under this section shall be required is limited to 50 percent of the total number of test groups of each model year required to be tested by each manufacturer as prescribed in § 86.1845 rounded to the next highest whole number where appropriate. For each manufacturer with only one test group under § 86.1845, such manufacturer shall have a maximum potential testing requirement under this section of one test group (or Agency-designated subset) per model year.

(i) *Testing plan.* Prior to beginning in-use confirmatory testing the manufacturer must, after consultation with the Agency, submit a written plan describing the details of the vehicle procurement, maintenance, and testing procedures (not otherwise specified by regulation) it intends to use. EPA must approve the test plan before the manufacturer may start further testing.

(j) *Testing a subset.* EPA may designate a subset of the test group based on transmission type for testing under this section in lieu of testing the entire test group when the results for the entire test group from testing conducted under § 86.1845 show mean emissions and a failure rate which meet these criteria for additional testing.

■ 180. Section 86.1848–10 is amended by revising paragraph (c)(7) to read as follows:

§ 86.1848–10 Compliance with emission standards for the purpose of certification.

* * * * *

(c) * * *

(7) All certificates of conformity issued are conditional upon compliance with all the provisions of §§ 86.1811 through 86.1816 and §§ 86.1860 through 86.1862 both during and after model year production. The manufacturer bears the burden of establishing to the satisfaction of the Administrator that the terms and conditions upon which each certificate was issued were satisfied. For recall and warranty purposes, vehicles not covered by a certificate of conformity will continue to be held to the standards stated or referenced in the certificate that otherwise would have applied to the vehicles.

(i) Failure to meet the applicable fleet average standard will be considered to be a failure to satisfy the terms and conditions upon which the certificate was issued and the vehicles sold in violation of the fleet average standard will not be covered by the certificate.

(ii) Failure to comply fully with the prohibition against selling credits that it has not generated or that are not available, as specified in § 86.1861, will be considered a failure to satisfy the terms and conditions upon which the certificate was issued and the vehicles sold in violation of this prohibition will not be covered by the certificate.

(iii) Failure to comply fully with the phase-in requirements of §§ 86.1811 through 86.1816 will be considered a failure to satisfy the terms and conditions upon which the certificate was issued and the vehicles sold that do not comply with the applicable standards, up to the number needed to comply, will not be covered by the certificate.

* * * * *

■ 181. A new § 86.1860–17 is added to subpart S to read as follows:

§ 86.1860–17 How to comply with the Tier 3 fleet-average standards.

(a) You must show that you meet the applicable fleet-average NMOG+NO_X standards from §§ 86.1811 and 86.1816 and the fleet-average evaporative emission standards from § 86.1813 as described in this section. Note that separate fleet-average calculations are required for the FTP and SFTP exhaust emission standards under § 86.1811.

(b) Calculate your fleet-average value for each model year for all vehicle models subject to a separate fleet-average standard using the following equation, rounded to the nearest 0.001 g/mile for NMOG+NO_X emissions and the nearest 0.001 g/test for evaporative emissions:

$$Fleet\ average\ value = \frac{\sum_{i=1}^{b}(N_i \cdot FEL_i)}{N_{total}}$$

Where:

i = A counter associated with each separate Tier 3 test group.

b = The number of separate Tier 3 test groups to which you certify your vehicles.

$N_{i>}$ = The actual sales for the model year for test group i.

FEL_i = The FEL selected for test group i. Disregard any separate standards that apply for in-use testing or for testing under high-altitude conditions.

N_{total} = The actual nationwide sales for the model year for all your Tier 3 vehicles, except as described in paragraph (c) of this section. The pool of vehicle models included in N_{total} may vary by model year, and it may be different for evaporative standards, FTP exhaust standards, and SFTP exhaust standards in a given model year.

(c) Do not include any of the following vehicles to calculate your fleet-average value:

(1) Vehicles that you do not certify to the standards of this part because they are permanently exempted under 40 CFR part 85 or part 1068.

(2) Exported vehicles.

(3) Vehicles excluded under § 86.1801.

(d) Except as specified in paragraph (e) of this section, your calculated fleet-average value may not exceed the corresponding fleet-average standard for the model year.

(e) You may generate or use emission credits related to your calculated fleet-average value as follows:

(1) You may generate emission credits as described in § 86.1861 if your fleet-average value is below the corresponding fleet-average standard.

(2) You may use emission credits as described in § 86.1861 if your fleet-average value is above the corresponding fleet-average standard. Except as specified in paragraph (e)(3) of this section, you must use enough credits for each model year to show that your adjusted fleet average value does not exceed the fleet-average standard.

(3) If you do not have enough emission credits to demonstrate compliance with a fleet-average standard in a given model year, you may carry forward a credit deficit for up to three model years. You may not bank emission credits with respect to a given emission standard during a model year in which you have a credit deficit in the same averaging set. If you fail to meet the fleet-average standard for four consecutive model years, the vehicles causing you to exceed the fleet-average standard will be considered not covered by the certificate of conformity. You will be subject to penalties on an individual-vehicle basis for sale of vehicles not covered by a certificate of conformity.

(f) If the applicable bin standards and FELs for all your vehicle models are at or below a corresponding fleet-average standard for a given model year, and you do not want to generate emission credits, you may omit the calculations described in this section.

(g) The deadline for offsetting debits as specified in paragraph (e)(3) of this section serves as the starting date for calculating the statute of limitations with respect to violating the requirements of paragraph (e)(3) of this section, failing to satisfy the conditions upon which a certificate was issued, and selling, offering for sale, introducing or delivering into U.S. commerce, or importing vehicles not covered by a certificate.

■ 182. A new § 86.1861–17 is added to subpart S to read as follows:

§ 86.1861–17 How do the NMOG+NO_X and evaporative emission credit programs work?

You may use emission credits for purposes of certification to show compliance with the applicable fleet-average NMOG+NO_X standards from §§ 86.1811 and 86.1816 and the fleet-average evaporative emission standards from § 86.1813 as described in 40 CFR part 1037, subpart H, with certain exceptions and clarifications as specified in this section. MDPVs are subject to the same provisions of this section that apply to LDT4s. (a) Calculate emission credits as described in this paragraph (a) instead of using the provisions of 40 CFR 1037.705. Calculate positive or negative emission

credits relative to the applicable fleet-average standard. Calculate positive emission credits if your fleet-average level is below the standard. Calculate negative emission credits if your fleet-average value is above the standard. Calculate credits separately for each type of standard and for each averaging set. Calculate emission credits using the following equation, rounded to the nearest whole number:

Emission credit = Volume · [Fleet average standard − Fleet average value]

Where:

Emission credit = The positive or negative credit for each discrete fleet-average standard, in units of vehicle-grams per mile for NMOG+NO_x and vehicle-grams per test for evaporative emissions.

Volume = Sales volume in a given model year from the collection of test groups covered by the fleet-average value, as described in § 86.1860.

(b) The following restrictions apply instead of those specified in 40 CFR 1037.740:

(1) Except as specified in paragraph (b)(3) of this section, emission credits may be exchanged only within an averaging set, as follows:

(i) HDVs represent a separate averaging set with respect to all emission standards.

(ii) LDVs and LDTs together represent a single averaging set with respect to NMOG+NO_X emission standards. Note that FTP and SFTP credits are not interchangeable.

(iii) The following separate averaging sets apply for evaporative emission standards:

(A) LDV and LDT1 together represent a single averaging set.

(B) LDT2 represents a single averaging set.

(C) HLDT represents a single averaging set.

(D) HDV represents a single averaging set.

(2) You may exchange evaporative emission credits across averaging sets as follows if you need additional credits to offset a deficit in the final year of maintaining deficit credits as allowed under paragraph (c) of this section:

(i) You may exchange LDV/LDT1 and LDT2 emission credits.

(ii) You may exchange HLDT and HDV emission credits.

(3) Credits expire after five years. For example, credits you generate in model year 2018 may be used only through model year 2023.

(c) The credit-deficit provisions 40 CFR 1037.745 apply without modification to the NMOG+NO_X and evaporative emission standards for Tier 3 vehicles.

(d) The reporting and recordkeeping provisions of § 86.1862 apply instead of those specified in 40 CFR 1037.730 and 1037.735.

(e) The provisions of 40 CFR 1037.645 do not apply.

■ 183. Section 86.1862–04 is revised to read as follows:

§ 86.1862–04 Maintenance of records and submittal of information relevant to compliance with fleet-average standards.

(a) *Overview.* This section describes reporting and recordkeeping requirements for vehicles subject to the following fleet-average or fleet-average standards:

(1) Tier 2 NO_X emission standard for light-duty vehicles and light-duty trucks in § 86.1811–04.

(2) Tier 3 FTP emission standard for NMOG+NO_X for light-duty vehicles and light-duty trucks in § 86.1811–17.

(3) Tier 3 SFTP emission standard for NMOG+NO_X for light-duty vehicles and light-duty trucks in § 86.1811–17.

(4) Tier 3 evaporative emission standards in § 86.1813–17.

(5) Tier 3 FTP emission standard for NMOG+NO_X for heavy-duty vehicles in § 86.1816–18.

(6) Cold-temperature NMHC standards in § 86.1811–10.

(b) *Maintenance of records.* (1) The manufacturer producing any vehicles subject to a fleet-average standard under this subpart must establish and maintain all the following information in organized and indexed records for each model year:

(i) Model year.

(ii) Applicable fleet-average standard.

(iii) Calculated fleet-average value.

(iv) All values used in calculating the fleet-average value achieved.

(2) The manufacturer producing any vehicle subject to the provisions in this section must keep all the following information for each vehicle:

(i) Model year.

(ii) Applicable fleet-average standard.

(iii) EPA test group.

(iv) Assembly plant.

(v) Vehicle identification number.

(vi) The FEL and the fleet-average standard to which the vehicle is certified.

(vii) Information on the point of first sale, including the purchaser, city, and state.

(3) The manufacturer must retain all records required to be maintained under this section for a period of eight years from the due date for the annual report. Records may be stored in any format and on any media, as long as manufacturers can promptly send EPA organized written records in English if we ask for them. Manufacturers must keep records readily available as EPA may review them at any time.

(4) The Administrator may require the manufacturer to retain additional records or submit information not specifically required by this section.

(5) EPA may void ab initio a certificate of conformity for a vehicle certified to emission standards as set forth or otherwise referenced in this subpart for which the manufacturer fails to retain the records required in this section, to provide such information to the Administrator upon request, or to submit the reports required in this section in the specified time period.

(c) *Reporting.* (1) Each manufacturer must submit an annual report. Except as provided in paragraph (b)(2) of this section, the annual report must contain, for each applicable fleet average standard, the fleet average value achieved, all values required to calculate the fleet-average value, the number of credits generated or debits incurred, all the values required to calculate the credits or debits, and sufficient information to show compliance with all phase-in requirements, if applicable. The annual report must also contain the resulting balance of credits or debits.

(2) When a manufacturer calculates compliance with the fleet-average standard using the provisions in § 86.1860–04(c)(2) or § 86.1860–17(f), the annual report must state that the manufacturer has elected to use such provision and must contain the fleet-average standard as the fleet-average value for that model year.

(3) For each applicable fleet-average standard, the annual report must also include documentation on all credit transactions the manufacturer has engaged in since those included in the last report. Information for each transaction must include all the following information:

(i) Name of credit provider.

(ii) Name of credit recipient.

(iii) Date the transfer occurred.

(iv) Quantity of credits transferred.

(v) Model year in which the credits were earned.

(4) Unless a manufacturer reports the data required by this section in the annual production report required under § 86.1844–01(e) and subsequent model year provisions, a manufacturer must submit an annual report for each model year after production ends for all affected vehicles produced by the manufacturer subject to the provisions of this subpart and no later than May 1 of the calendar year following the given model year. Annual reports must be submitted to: Director, Compliance Division, U.S. Environmental Protection

Agency, 2000 Traverwood, Ann Arbor, Michigan 48105.

(5) Failure by a manufacturer to submit the annual report in the specified time period for all vehicles subject to the provisions in this section is a violation of Clean Air Act section 203(a)(1) (42 U.S.C 7522(a)(1)) for each subject vehicle produced by that manufacturer.

(6) If EPA or the manufacturer determines that a reporting error occurred on an annual report previously submitted to EPA, the manufacturer's credit or debit calculations will be recalculated. EPA may void erroneous credits, unless transferred, and must adjust erroneous debits. In the case of transferred erroneous credits, EPA must adjust the selling manufacturer's credit or debit balance to reflect the sale of such credits and any resulting generation of debits.

(d) *Notice of opportunity for hearing.* Any voiding of the certificate under paragraph (a)(6) of this section will be made only after EPA has offered the manufacturer concerned an opportunity for a hearing conducted in accordance with § 86.614 for light-duty vehicles and light-duty trucks and with 40 CFR part 1068, subpart G, for heavy-duty vehicles.

■ 184. Section 86.1863–07 is amended by adding introductory text to read as follows:

§ 86.1863–07 Optional chassis certification for diesel vehicles.

This section does not apply for vehicles certified to the Tier 3 standards in § 86.1816–18, including those vehicles that certify to the Tier 3 standards before model year 2018.

* * * * *

■ 185. Section 86.1864–10 is amended by revising paragraph (p) to read as follows:

§ 86.1864–10 How to comply with the fleet average cold temperature NMHC standards.

* * * * *

(p) *Reporting and recordkeeping.* Keep records and submit information for demonstrating compliance with the fleet average cold temperature NMHC standard as described in § 86.1862–04.

■ 186. Section 86.1868–12 is amended by revising paragraphs (f)(1) and (g)(1) to read as follows:

§ 86.1868–12 CO_2 credits for improving the efficiency of air conditioning systems.

* * * * *

(f) * * *

(1) The manufacturer shall perform the AC17 test specified in 40 CFR 1066.840 on each unique air conditioning system design and vehicle platform combination for which the manufacturer intends to accrue air conditioning efficiency credits. The manufacturer must test at least one unique air conditioning system within each vehicle platform in a model year, unless all unique air conditioning systems within a vehicle platform have been previously tested. A unique air conditioning system design is a system with unique or substantially different component designs or types and/or system control strategies (e.g., fixed displacement vs. variable displacement compressors, orifice tube vs. thermostatic expansion valve, single vs. dual evaporator, etc.). In the first year of such testing, the tested vehicle configuration shall be the highest production vehicle configuration within each platform. In subsequent model years the manufacturer must test other unique air conditioning systems within the vehicle platform, proceeding from the highest production untested system until all unique air conditioning systems within the platform have been tested, or until the vehicle platform experiences a major redesign. Whenever a new unique air conditioning system is tested, the highest production configuration using that system shall be the vehicle selected for testing. Air conditioning system designs which have similar cooling capacity, component types, and control strategies, yet differ in terms of compressor pulley ratios or condenser or evaporator surface areas will not be considered to be unique system designs. The test results from one unique system design may represent all variants of that design. Manufacturers must use good engineering judgment to identify the unique air conditioning system designs which will require AC17 testing in subsequent model years. Results must be reported separately for all four phases (two phases with air conditioning off and two phases with air conditioning on) of the test to the Environmental Protection Agency, and the results of the calculations required in 40 CFR 1066.840 must also be reported. In each subsequent model year additional air conditioning system designs, if such systems exist, within a vehicle platform that is generating air conditioning credits must be tested using the AC17 procedure.

* * * * *

(g) * * *

(1) For each air conditioning system selected by the manufacturer to generate air conditioning efficiency credits, the manufacturer shall perform the AC17 Air Conditioning Efficiency Test Procedure specified in 40 CFR 1066.840, according to the requirements of this paragraph (g).

* * * * *

■ 187. Appendix I to Part 86 is amended by revising the appendix heading, paragraph (a) before the table, paragraphs (b) and (c), and the introductory text of paragraph (d) to read as follows:

Appendix I to Part 86—Dynamometer Schedules

(a) *EPA light-duty urban dynamometer driving schedule (UDDS).* This driving schedule is also known as the LA–4 cycle.

(1) The driving schedule in this paragraph (a) applies for light-duty vehicles, light-duty trucks, and heavy-duty vehicles certified under subpart S of this part.

(2) The driving schedule in this paragraph (a) applies for motorcycles with engine displacement at or above 170 cc. Calculate the speed-versus-time sequence in kilometers per hour by multiplying the listed speed by 1.6 and rounding to the nearest 0.1 kilometers per hour.

(3) The driving schedule follows:

* * * * *

(b) *EPA driving schedule for motorcycles with engine displacement below 170 cc.* Use the driving schedule specified in paragraph (a)(2) of this appendix, except that the schedule specified in this paragraph (b) applies for the portion of the driving schedule from 164 to 332 seconds.

SPEED VERSUS TIME SEQUENCE

Time (sec.)	Speed (kph)
164	3.4
165	6.8
166	10.3
167	13.7
168	17.1
169	20.5
170	23.0
171	25.2
172	26.7
173	27.4
174	26.6
175	26.0
176	25.6
177	25.9
178	26.1
179	26.3
180	26.7
181	28.2
182	27.5
183	24.9
184	23.5
185	20.1
186	18.3
187	17.8
188	18.8
189	19.3
190	20.7
191	23.0
192	25.4
193	28.3
194	31.6
195	34.7
196	37.5

SPEED VERSUS TIME SEQUENCE—Continued

Time (sec.)	Speed (kph)
197	38.6
198	40.7
199	42.0
200	43.6
201	45.1
202	46.7
203	47.7
204	48.5
205	49.2
206	49.2
207	49.0
208	48.9
209	48.7
210	48.7
211	48.7
212	48.7
213	48.7
214	48.9
215	49.1
216	49.6
217	50.2
218	50.9
219	51.3
220	51.8
221	52.4
222	52.8
223	53.4
224	54.1
225	55.1
226	56.0
227	56.6
228	56.9
229	57.0
230	56.9
231	56.6
232	56.6
233	56.8
234	57.1
235	57.5
236	57.7
237	58.1
238	58.3
239	58.6
240	58.7
241	58.7
242	58.5
243	58.5
244	58.5
245	58.5
246	58.5
247	58.5
248	58.4
249	58.1
250	57.8
251	57.1
252	56.6
253	56.2
254	55.9
255	55.6
256	55.5
257	55.8
258	55.9
259	56.0
260	56.0
261	55.7
262	55.3
263	54.9
264	54.5
265	54.0
266	54.3

SPEED VERSUS TIME SEQUENCE—Continued

Time (sec.)	Speed (kph)
267	53.9
268	53.8
269	53.6
270	53.4
271	53.5
272	53.7
273	54.0
274	54.4
275	54.9
276	55.4
277	55.9
278	56.9
279	57.4
280	57.6
281	58.0
282	58.0
283	57.8
284	57.2
285	56.5
286	55.5
287	54.4
288	53.4
289	53.4
290	53.4
291	52.9
292	51.9
293	51.8
294	51.9
295	51.8
296	51.4
297	51.3
298	51.3
299	51.3
300	50.9
301	50.3
302	49.8
303	48.9
304	47.8
305	46.6
306	45.4
307	44.1
308	43.0
309	41.8
310	39.9
311	38.3
312	36.5
313	35.0
314	33.7
315	32.6
316	31.7
317	31.6
318	31.1
319	30.0
320	28.5
321	25.7
322	22.3
323	20.8
324	19.8
325	19.2
326	17.6
327	16.1
328	12.9
329	11.2
330	8.3
331	4.9
332	1.5

(c) *EPA driving schedule for class 3 heavy-duty vehicles.* This driving schedule is also known as the LA–92 cycle.

Time (sec.)	Speed (mph)
1	0.0
2	0.0
3	0.0
4	0.0
5	0.0
6	0.0
7	0.0
8	0.0
9	0.0
10	0.0
11	0.0
12	0.0
13	0.0
14	0.0
15	0.0
16	0.0
17	0.0
18	0.0
19	0.0
20	0.0
21	1.2
22	4.2
23	7.3
24	8.8
25	10.8
26	12.3
27	13.1
28	12.3
29	12.3
30	11.5
31	11.5
32	11.1
33	11.1
34	11.1
35	13.1
36	15.0
37	16.9
38	16.9
39	16.1
40	15.7
41	15.4
42	15.0
43	13.8
44	10.8
45	8.4
46	6.1
47	4.2
48	3.5
49	3.5
50	1.5
51	0.0
52	0.0
53	0.0
54	0.0
55	0.0
56	0.0
57	0.0
58	0.0
59	0.0
60	0.0
61	0.0
62	0.0
63	1.2
64	3.5
65	7.7
66	11.1
67	13.8
68	16.5
69	18.4
70	20.4
71	20.7
72	19.6
73	17.3

Time (sec.)	Speed (mph)	Time (sec.)	Speed (mph)	Time (sec.)	Speed (mph)
74	12.3	147	20.0	220	0.0
75	8.1	148	23.0	221	0.0
76	6.1	149	25.7	222	0.0
77	9.6	150	28.0	223	0.0
78	12.7	151	30.7	224	0.0
79	15.7	152	32.6	225	0.0
80	18.0	153	34.2	226	0.0
81	20.4	154	35.3	227	0.0
82	21.9	155	36.9	228	0.0
83	23.4	156	36.9	229	0.0
84	23.8	157	37.2	230	0.0
85	24.6	158	37.6	231	0.0
86	25.0	159	37.6	232	0.0
87	26.1	160	37.6	233	0.0
88	26.1	161	37.2	234	0.0
89	26.9	162	37.2	235	0.0
90	26.9	163	36.9	236	0.0
91	26.9	164	36.5	237	0.0
92	26.5	165	36.5	238	1.5
93	25.7	166	34.9	239	5.0
94	21.9	167	33.4	240	8.8
95	16.5	168	31.9	241	11.5
96	10.0	169	29.2	242	14.2
97	4.6	170	25.0	243	15.4
98	1.5	171	25.0	244	16.1
99	0.4	172	26.1	245	16.1
100	0.0	173	27.6	246	16.9
101	0.0	174	29.2	247	16.5
102	0.0	175	31.1	248	16.9
103	0.0	176	32.3	249	18.0
104	0.0	177	34.2	250	19.2
105	0.0	178	34.9	251	20.4
106	0.0	179	35.7	252	20.4
107	0.0	180	36.5	253	21.1
108	0.4	181	36.9	254	21.1
109	1.2	182	36.9	255	22.3
110	1.9	183	37.2	256	23.0
111	3.8	184	37.6	257	23.8
112	7.7	185	37.2	258	24.2
113	11.5	186	37.6	259	24.6
114	14.6	187	38.0	260	25.0
115	18.0	188	38.4	261	25.7
116	21.5	189	39.2	262	25.7
117	25.0	190	39.6	263	26.5
118	28.4	191	39.9	264	27.6
119	30.7	192	40.7	265	28.4
120	31.9	193	40.3	266	29.2
121	32.3	194	41.1	267	30.3
122	32.3	195	41.1	268	31.1
123	31.9	196	40.7	269	31.1
124	30.3	197	31.9	270	30.7
125	28.0	198	23.9	271	31.1
126	24.2	199	15.9	272	29.6
127	20.0	200	7.9	273	29.2
128	16.1	201	2.7	274	29.2
129	11.5	202	0.4	275	28.8
130	8.1	203	0.4	276	28.0
131	5.0	204	2.7	277	23.0
132	3.5	205	3.8	278	21.1
133	1.9	206	3.8	279	21.5
134	0.0	207	1.5	280	20.7
135	0.0	208	0.0	281	20.7
136	0.0	209	0.0	282	19.6
137	0.0	210	0.0	283	16.5
138	0.0	211	0.0	284	13.1
139	0.0	212	0.0	285	9.6
140	0.0	213	0.0	286	7.3
141	0.0	214	0.0	287	3.8
142	0.0	215	0.0	288	0.8
143	1.5	216	0.0	289	0.0
144	6.9	217	0.0	290	0.0
145	12.7	218	0.0	291	0.0
146	16.5	219	0.0	292	0.0

Time (sec.)	Speed (mph)	Time (sec.)	Speed (mph)	Time (sec.)	Speed (mph)
293	0.0	366	45.3	439	60.3
294	0.0	367	46.5	440	60.3
295	0.0	368	48.0	441	60.3
296	0.0	369	48.8	442	59.5
297	0.0	370	49.5	443	58.8
298	0.0	371	49.9	444	59.1
299	0.0	372	49.9	445	58.8
300	0.0	373	49.9	446	58.8
301	0.0	374	49.5	447	58.8
302	0.0	375	49.5	448	58.4
303	0.0	376	48.8	449	58.0
304	0.0	377	48.8	450	58.0
305	0.0	378	48.8	451	58.0
306	0.0	379	48.4	452	58.4
307	0.0	380	48.8	453	59.1
308	0.0	381	49.5	454	59.5
309	0.0	382	50.3	455	59.9
310	0.0	383	50.7	456	59.9
311	0.0	384	51.8	457	60.3
312	0.0	385	52.6	458	61.1
313	0.4	386	53.4	459	61.1
314	2.7	387	54.1	460	61.1
315	7.3	388	55.3	461	61.4
316	11.5	389	55.3	462	61.4
317	15.4	390	56.1	463	61.1
318	18.4	391	56.4	464	60.7
319	20.7	392	56.4	465	59.9
320	24.2	393	56.4	466	59.1
321	26.9	394	57.2	467	59.1
322	29.6	395	56.8	468	59.1
323	31.1	396	57.6	469	59.9
324	32.6	397	57.6	470	59.5
325	33.8	398	57.6	471	59.9
326	34.9	399	58.0	472	58.8
327	36.9	400	58.0	473	58.0
328	39.2	401	58.4	474	57.6
329	41.1	402	58.4	475	56.8
330	43.0	403	58.8	476	56.1
331	43.8	404	59.1	477	55.3
332	44.5	405	58.8	478	54.1
333	45.3	406	58.8	479	52.6
334	45.3	407	58.0	480	49.2
335	44.9	408	58.0	481	46.1
336	44.5	409	57.6	482	43.0
337	43.8	410	57.6	483	37.2
338	43.4	411	57.6	484	29.6
339	42.6	412	57.6	485	21.5
340	41.9	413	57.6	486	16.5
341	41.5	414	59.1	487	15.7
342	40.7	415	59.5	488	18.4
343	40.3	416	59.9	489	21.5
344	41.1	417	60.3	490	25.0
345	41.5	418	60.3	491	27.3
346	42.6	419	61.1	492	29.2
347	43.4	420	60.3	493	30.7
348	44.2	421	59.9	494	31.5
349	44.9	422	59.5	495	31.1
350	45.7	423	59.1	496	31.1
351	46.5	424	59.1	497	30.3
352	46.8	425	59.5	498	30.0
353	47.2	426	59.5	499	30.0
354	48.0	427	59.5	500	29.6
355	47.6	428	59.9	501	30.0
356	48.4	429	60.3	502	28.8
357	48.0	430	60.7	503	28.8
358	47.2	431	60.7	504	28.0
359	46.1	432	61.4	505	28.4
360	45.7	433	61.8	506	28.0
361	44.9	434	61.8	507	28.4
362	44.2	435	61.8	508	28.4
363	43.8	436	61.8	509	28.8
364	44.5	437	61.1	510	28.4
365	44.9	438	60.7	511	28.4

Time (sec.)	Speed (mph)	Time (sec.)	Speed (mph)	Time (sec.)	Speed (mph)
512	28.0	585	20.0	658	33.0
513	26.5	586	16.9	659	34.2
514	24.2	587	13.4	660	34.6
515	22.7	588	13.4	661	35.3
516	20.4	589	15.7	662	36.1
517	17.7	590	18.4	663	36.1
518	15.7	591	21.1	664	36.9
519	13.1	592	23.4	665	36.9
520	10.8	593	25.3	666	37.6
521	8.4	594	27.6	667	37.6
522	7.3	595	28.8	668	38.4
523	5.0	596	30.3	669	38.0
524	3.8	597	30.7	670	37.6
525	3.5	598	31.5	671	37.6
526	1.9	599	31.1	672	37.2
527	0.8	600	31.1	673	36.9
528	0.0	601	30.3	674	36.1
529	0.0	602	30.3	675	35.7
530	0.0	603	30.3	676	36.1
531	0.8	604	30.7	677	35.7
532	1.9	605	31.1	678	35.7
533	3.8	606	32.3	679	35.7
534	6.9	607	32.6	680	36.1
535	9.6	608	32.6	681	36.1
536	11.1	609	32.6	682	35.7
537	11.1	610	31.1	683	35.7
538	10.4	611	26.9	684	34.9
539	8.8	612	22.3	685	34.6
540	9.2	613	18.0	686	34.2
541	10.0	614	13.8	687	33.8
542	10.4	615	9.6	688	33.4
543	10.4	616	4.6	689	33.0
544	5.4	617	6.1	690	30.3
545	1.9	618	10.0	691	29.2
546	0.0	619	14.2	692	28.4
547	0.0	620	17.3	693	25.0
548	0.0	621	20.0	694	21.1
549	0.0	622	21.5	695	16.9
550	0.0	623	22.3	696	13.4
551	0.0	624	22.3	697	13.1
552	0.0	625	22.3	698	12.3
553	0.0	626	22.3	699	12.7
554	0.0	627	23.0	700	15.7
555	0.0	628	23.0	701	19.2
556	0.0	629	22.7	702	22.3
557	0.0	630	22.3	703	24.6
558	0.0	631	21.9	704	25.7
559	0.0	632	22.7	705	26.5
560	0.0	633	23.8	706	26.5
561	0.0	634	25.0	707	26.9
562	0.0	635	25.3	708	27.3
563	0.0	636	25.7	709	27.3
564	0.0	637	26.5	710	27.6
565	0.0	638	26.9	711	28.4
566	0.0	639	27.3	712	28.8
567	0.0	640	28.0	713	28.8
568	0.0	641	29.2	714	29.2
569	0.0	642	30.0	715	28.8
570	0.0	643	30.0	716	28.8
571	0.0	644	29.6	717	28.0
572	0.4	645	29.6	718	28.0
573	1.5	646	28.8	719	27.6
574	3.5	647	28.4	720	26.5
575	6.1	648	28.0	721	24.6
576	10.4	649	27.3	722	20.7
577	14.2	650	25.7	723	16.5
578	16.9	651	24.6	724	15.0
579	19.2	652	25.0	725	14.2
580	20.0	653	26.5	726	14.2
581	21.5	654	28.0	727	13.8
582	23.4	655	29.6	728	13.8
583	24.6	656	30.7	729	11.9
584	24.2	657	32.3	730	8.4

Time (sec.)	Speed (mph)	Time (sec.)	Speed (mph)	Time (sec.)	Speed (mph)
731	4.2	804	20.4	877	62.2
732	1.2	805	18.8	878	62.2
733	0.0	806	17.3	879	62.6
734	0.0	807	15.0	880	63.7
735	0.0	808	13.1	881	64.5
736	0.0	809	9.2	882	64.9
737	0.0	810	6.9	883	66.0
738	0.0	811	4.6	884	66.0
739	0.0	812	4.6	885	66.8
740	0.0	813	4.6	886	66.4
741	0.0	814	4.2	887	66.8
742	0.0	815	5.4	888	67.2
743	0.0	816	4.6	889	66.4
744	0.0	817	3.5	890	66.4
745	0.0	818	2.3	891	66.0
746	0.0	819	2.3	892	65.7
747	0.0	820	1.9	893	65.7
748	0.0	821	3.1	894	66.4
749	0.0	822	6.1	895	66.0
750	0.0	823	4.6	896	65.7
751	0.0	824	2.7	897	65.3
752	0.0	825	2.3	898	65.3
753	0.0	826	2.3	899	64.5
754	0.0	827	3.1	900	64.5
755	0.0	828	4.2	901	64.1
756	0.0	829	3.5	902	63.7
757	0.0	830	3.8	903	63.7
758	0.0	831	4.2	904	63.7
759	0.0	832	3.5	905	64.5
760	0.0	833	3.5	906	64.5
761	0.0	834	3.5	907	64.9
762	0.0	835	4.6	908	64.5
763	1.5	836	5.8	909	64.1
764	5.4	837	3.5	910	64.9
765	9.2	838	0.8	911	65.3
766	11.5	839	3.5	912	65.3
767	14.6	840	3.8	913	65.3
768	17.3	841	2.3	914	64.1
769	19.2	842	0.0	915	63.4
770	21.1	843	1.2	916	63.0
771	20.7	844	6.9	917	63.4
772	20.7	845	13.8	918	64.1
773	19.6	846	18.8	919	64.9
774	18.4	847	23.8	920	65.3
775	16.9	848	27.3	921	64.5
776	16.9	849	30.7	922	64.1
777	16.5	850	33.8	923	63.4
778	16.9	851	37.6	924	63.7
779	16.9	852	40.7	925	63.4
780	16.9	853	43.8	926	63.4
781	17.3	854	46.1	927	63.4
782	19.2	855	48.0	928	63.4
783	20.4	856	49.5	929	63.7
784	21.1	857	51.5	930	64.5
785	22.3	858	53.0	931	65.3
786	22.3	859	54.5	932	64.9
787	22.7	860	55.7	933	63.7
788	22.3	861	56.8	934	63.0
789	22.7	862	58.0	935	59.9
790	22.3	863	59.1	936	55.3
791	23.8	864	60.3	937	50.7
792	25.7	865	61.1	938	49.2
793	27.6	866	61.8	939	48.0
794	29.6	867	61.8	940	46.1
795	30.0	868	61.8	941	44.2
796	29.2	869	61.8	942	41.1
797	27.6	870	62.6	943	39.9
798	25.0	871	63.4	944	36.1
799	23.8	872	63.0	945	32.6
800	23.4	873	63.0	946	29.2
801	24.2	874	62.6	947	24.6
802	23.4	875	61.8	948	20.7
803	23.0	876	61.8	949	19.2

Time (sec.)	Speed (mph)	Time (sec.)	Speed (mph)	Time (sec.)	Speed (mph)
950	16.5	1023	0.4	1096	9.6
951	15.0	1024	2.7	1097	8.8
952	11.9	1025	6.1	1098	10.8
953	9.6	1026	9.2	1099	12.7
954	8.4	1027	11.5	1100	14.2
955	5.8	1028	14.2	1101	14.6
956	1.2	1029	16.1	1102	13.1
957	0.0	1030	18.0	1103	11.1
958	0.0	1031	20.0	1104	11.1
959	0.0	1032	21.5	1105	11.1
960	1.2	1033	23.0	1106	13.1
961	3.1	1034	24.2	1107	15.7
962	5.0	1035	25.0	1108	18.4
963	8.4	1036	25.7	1109	20.7
964	11.5	1037	26.9	1110	23.8
965	14.6	1038	27.6	1111	25.7
966	16.9	1039	27.6	1112	28.0
967	18.8	1040	28.4	1113	30.0
968	21.1	1041	29.2	1114	31.1
969	23.8	1042	29.2	1115	32.3
970	26.5	1043	30.0	1116	34.2
971	28.0	1044	29.6	1117	35.7
972	29.6	1045	29.6	1118	36.9
973	30.7	1046	28.8	1119	38.8
974	32.6	1047	28.0	1120	40.3
975	34.2	1048	23.8	1121	41.5
976	35.3	1049	18.8	1122	42.2
977	36.1	1050	11.9	1123	43.0
978	36.9	1051	6.1	1124	43.8
979	38.0	1052	1.5	1125	43.8
980	38.0	1053	1.5	1126	43.4
981	38.0	1054	4.2	1127	43.0
982	38.0	1055	8.1	1128	42.2
983	38.0	1056	10.4	1129	41.9
984	37.2	1057	13.1	1130	41.5
985	36.9	1058	15.4	1131	41.9
986	36.1	1059	18.0	1132	41.9
987	35.7	1060	20.4	1133	41.9
988	34.9	1061	23.0	1134	42.2
989	34.9	1062	25.3	1135	42.6
990	33.8	1063	27.3	1136	42.6
991	31.5	1064	28.8	1137	42.6
992	28.8	1065	30.3	1138	42.6
993	25.7	1066	31.1	1139	42.6
994	24.6	1067	32.3	1140	42.6
995	23.4	1068	31.9	1141	42.6
996	22.3	1069	32.3	1142	42.2
997	21.5	1070	31.9	1143	43.0
998	20.0	1071	31.1	1144	43.4
999	20.0	1072	28.8	1145	43.0
1000	19.2	1073	25.0	1146	42.6
1001	19.2	1074	22.7	1147	41.9
1002	18.0	1075	18.8	1148	40.7
1003	11.9	1076	15.4	1149	36.9
1004	6.9	1077	13.4	1150	32.6
1005	2.7	1078	11.9	1151	28.0
1006	0.8	1079	8.8	1152	23.4
1007	0.4	1080	5.0	1153	18.4
1008	0.0	1081	1.9	1154	14.6
1009	0.0	1082	2.3	1155	12.3
1010	0.0	1083	2.7	1156	9.2
1011	0.0	1084	3.5	1157	5.8
1012	0.0	1085	6.5	1158	1.9
1013	0.0	1086	10.8	1159	0.4
1014	0.0	1087	13.8	1160	0.0
1015	0.0	1088	16.1	1161	0.0
1016	0.0	1089	18.4	1162	0.0
1017	0.0	1090	20.4	1163	0.0
1018	0.0	1091	21.9	1164	0.0
1019	0.0	1092	21.9	1165	0.4
1020	0.0	1093	20.7	1166	4.2
1021	0.0	1094	17.3	1167	9.2
1022	0.0	1095	13.1	1168	11.9

Time (sec.)	Speed (mph)	Time (sec.)	Speed (mph)	Time (sec.)	Speed (mph)
1169	14.2	1242	15.4	1315	38.8
1170	15.7	1243	17.3	1316	38.0
1171	15.0	1244	17.3	1317	37.6
1172	14.2	1245	18.4	1318	37.2
1173	13.4	1246	21.5	1319	36.5
1174	13.8	1247	24.6	1320	34.6
1175	14.6	1248	27.3	1321	31.5
1176	14.6	1249	30.0	1322	29.6
1177	14.2	1250	31.5	1323	29.2
1178	16.1	1251	31.9	1324	28.8
1179	15.7	1252	32.6	1325	28.8
1180	15.7	1253	33.4	1326	28.0
1181	14.6	1254	34.9	1327	28.0
1182	13.1	1255	36.5	1328	28.4
1183	10.0	1256	37.6	1329	29.6
1184	7.3	1257	39.2	1330	30.0
1185	3.5	1258	40.3	1331	30.3
1186	0.8	1259	40.7	1332	29.2
1187	0.0	1260	41.1	1333	26.5
1188	0.0	1261	40.7	1334	25.3
1189	0.0	1262	40.7	1335	25.0
1190	0.0	1263	40.7	1336	24.6
1191	0.4	1264	41.5	1337	24.6
1192	2.7	1265	42.6	1338	25.3
1193	7.3	1266	43.0	1339	26.1
1194	11.5	1267	44.5	1340	27.3
1195	15.4	1268	45.3	1341	28.4
1196	19.2	1269	45.3	1342	29.2
1197	21.9	1270	44.9	1343	29.2
1198	23.8	1271	43.4	1344	29.6
1199	25.0	1272	40.3	1345	30.0
1200	26.1	1273	38.0	1346	31.1
1201	27.3	1274	36.1	1347	32.6
1202	28.8	1275	36.5	1348	33.8
1203	30.0	1276	38.0	1349	34.6
1204	29.6	1277	39.2	1350	34.9
1205	29.6	1278	40.7	1351	34.6
1206	28.8	1279	42.2	1352	34.9
1207	26.1	1280	43.4	1353	34.6
1208	22.3	1281	44.9	1354	34.9
1209	19.2	1282	45.7	1355	34.9
1210	16.5	1283	46.1	1356	34.9
1211	12.7	1284	46.8	1357	34.2
1212	9.6	1285	46.5	1358	33.8
1213	6.9	1286	46.5	1359	32.6
1214	4.2	1287	46.5	1360	31.5
1215	2.3	1288	46.1	1361	30.0
1216	0.8	1289	46.1	1362	28.8
1217	0.0	1290	46.1	1363	27.3
1218	0.0	1291	46.8	1364	23.8
1219	0.0	1292	47.6	1365	23.0
1220	0.0	1293	48.0	1366	23.0
1221	0.0	1294	48.4	1367	22.3
1222	0.0	1295	48.0	1368	20.4
1223	0.0	1296	48.0	1369	18.8
1224	0.0	1297	47.2	1370	17.7
1225	0.0	1298	46.5	1371	16.1
1226	0.0	1299	46.8	1372	14.6
1227	0.0	1300	47.2	1373	12.7
1228	0.0	1301	48.4	1374	11.1
1229	0.0	1302	48.4	1375	9.2
1230	0.0	1303	48.8	1376	8.8
1231	0.0	1304	48.4	1377	7.3
1232	0.0	1305	47.6	1378	6.1
1233	0.0	1306	46.5	1379	5.0
1234	0.0	1307	44.2	1380	4.2
1235	0.0	1308	42.2	1381	3.5
1236	0.0	1309	41.5	1382	2.7
1237	0.0	1310	41.1	1383	2.3
1238	0.0	1311	40.7	1384	1.5
1239	0.0	1312	40.3	1385	1.2
1240	3.5	1313	39.6	1386	0.0
1241	10.4	1314	39.2	1387	1.2

Time (sec.)	Speed (mph)	Time (sec.)	Speed (mph)	Time (sec.)	Speed (mph)
1388	4.2	1461	12.3	1534	0.4
1389	7.3	1462	13.1	1535	0.0
1390	8.8	1463	12.3	1536	0.0
1391	10.8	1464	12.3	1537	0.0
1392	12.3	1465	11.5	1538	0.0
1393	13.1	1466	11.5	1539	0.0
1394	12.3	1467	11.1	1540	0.0
1395	12.3	1468	11.1	1541	0.0
1396	11.5	1469	11.1	1542	0.0
1397	11.5	1470	13.1	1543	0.4
1398	11.1	1471	15.0	1544	1.2
1399	11.1	1472	16.9	1545	1.9
1400	11.1	1473	16.9	1546	3.8
1401	13.1	1474	16.1	1547	7.7
1402	15.0	1475	15.7	1548	11.5
1403	16.9	1476	15.4	1549	14.6
1404	16.9	1477	15.0	1550	18.0
1405	16.1	1478	13.8	1551	21.5
1406	15.7	1479	10.8	1552	25.0
1407	15.4	1480	8.4	1553	28.4
1408	15.0	1481	6.1	1554	30.7
1409	13.8	1482	4.2	1555	31.9
1410	10.8	1483	3.5	1556	32.3
1411	8.4	1484	3.5	1557	32.3
1412	6.1	1485	1.5	1558	31.9
1413	4.2	1486	0.0	1559	30.3
1414	3.5	1487	0.0	1560	28.0
1415	3.5	1488	0.0	1561	24.2
1416	1.5	1489	0.0	1562	20.0
1417	0.0	1490	0.0	1563	16.1
1418	0.0	1491	0.0	1564	11.5
1419	0.0	1492	0.0	1565	8.1
1420	0.0	1493	0.0	1566	5.0
1421	0.0	1494	0.0	1567	3.5
1422	0.0	1495	0.0	1568	1.9
1423	0.0	1496	0.0	1569	0.0
1424	0.0	1497	0.0	1570	0.0
1425	0.0	1498	1.2	1571	0.0
1426	0.0	1499	3.5	1572	0.0
1427	0.0	1500	7.7	1573	0.0
1428	0.0	1501	11.1	1574	0.0
1429	0.0	1502	13.8	1575	0.0
1430	0.0	1503	16.5	1576	0.0
1431	0.0	1504	18.4	1577	0.0
1432	0.0	1505	20.4	1578	1.5
1433	0.0	1506	20.7	1579	6.9
1434	0.0	1507	19.6	1580	12.7
1435	0.0	1508	17.3	1581	16.5
1436	0.0	1509	12.3	1582	20.0
1437	0.0	1510	8.1	1583	23.0
1438	0.0	1511	6.1	1584	25.7
1439	0.0	1512	9.6	1585	28.0
1440	0.0	1513	12.7	1586	30.7
1441	0.0	1514	15.7	1587	32.6
1442	0.0	1515	18.0	1588	34.2
1443	0.0	1516	20.4	1589	35.3
1444	0.0	1517	21.9	1590	36.9
1445	0.0	1518	23.4	1591	36.9
1446	0.0	1519	23.8	1592	37.2
1447	0.0	1520	24.6	1593	37.6
1448	0.0	1521	25.0	1594	37.6
1449	0.0	1522	26.1	1595	37.6
1450	0.0	1523	26.1	1596	37.2
1451	0.0	1524	26.9	1597	37.2
1452	0.0	1525	26.9	1598	36.9
1453	0.0	1526	26.9	1599	36.5
1454	0.0	1527	26.5	1600	36.5
1455	0.0	1528	25.7	1601	34.9
1456	1.2	1529	21.9	1602	33.4
1457	4.2	1530	16.5	1603	31.9
1458	7.3	1531	10.0	1604	29.2
1459	8.8	1532	4.6	1605	25.0
1460	10.8	1533	1.5	1606	25.0

Time (sec.)	Speed (mph)
1607	26.1
1608	27.6
1609	29.2
1610	31.1
1611	32.3
1612	34.2
1613	34.9
1614	35.7
1615	36.5
1616	36.9
1617	36.9
1618	37.2
1619	37.6
1620	37.2
1621	37.6
1622	38.0
1623	38.4
1624	39.2
1625	39.6
1626	39.9
1627	40.7
1628	40.3
1629	41.1
1630	41.1
1631	40.7
1632	31.9
1633	23.9
1634	15.9
1635	7.9
1636	2.7
1637	0.4
1638	0.4
1639	2.7
1640	3.8
1641	3.8
1642	1.5
1643	0.0
1644	0.0
1645	0.0
1646	0.0
1647	0.0
1648	0.0
1649	0.0
1650	0.0
1651	0.0
1652	0.0
1653	0.0
1654	0.0
1655	0.0
1656	0.0
1657	0.0
1658	0.0
1659	0.0
1660	0.0
1661	0.0
1662	0.0
1663	0.0
1664	0.0
1665	0.0
1666	0.0
1667	0.0
1668	0.0
1669	0.0
1670	0.0
1671	0.0
1672	0.0
1673	1.5
1674	5.0
1675	8.8
1676	11.5
1677	14.2
1678	15.4
1679	16.1
1680	16.1
1681	16.9
1682	16.5
1683	16.9
1684	18.0
1685	19.2
1686	20.4
1687	20.4
1688	21.1
1689	21.1
1690	22.3
1691	23.0
1692	23.8
1693	24.2
1694	24.6
1695	25.0
1696	25.7
1697	25.7
1698	26.5
1699	27.6
1700	28.4
1701	29.2
1702	30.3
1703	31.1
1704	31.1
1705	30.7
1706	31.1
1707	29.6
1708	29.2
1709	29.2
1710	28.8
1711	28.0
1712	23.0
1713	21.1
1714	21.5
1715	20.7
1716	20.7
1717	19.6
1718	16.5
1719	13.1
1720	9.6
1721	7.3
1722	3.8
1723	0.8
1724	0.0
1725	0.0
1726	0.0
1727	0.0
1728	0.0
1729	0.0
1730	0.0
1731	0.0
1732	0.0
1733	0.0
1734	0.0
1735	0.0

(d) *EPA driving schedule for testing heavy-duty vehicles above 14,000 pounds GVWR.* This driving schedule applies for testing vehicles subject to evaporative emission standards under subpart A of this part.

* * * * *

Appendix XIII Through Appendix XVIII to Part 86—[Removed]

■ 188. Appendix XIII through Appendix XVIII to part 86 are removed.

PART 600—FUEL ECONOMY AND GREENHOUSE GAS EXHAUST EMISSIONS OF MOTOR VEHICLES

■ 189. The authority citation for part 600 continues to read as follows:

Authority: 49 U.S.C. 32901–32919q, Pub. L. 109–58.

Subpart A—[Amended]

■ 190. Section 600.011 is amended by revising paragraphs (b), (c)(2), and (c)(3) to read as follows:

§ 600.011 Incorporation by reference.

* * * * *

(b) American Society for Testing and Materials, 100 Barr Harbor Drive, P.O. Box C700, West Conshohocken, PA 19428–2959, (610) 832–9585, *http://www.astm.org/.*

(1) ASTM D975–11 Standard Specification for Diesel Fuel Oils, approved March 1, 2011, IBR approved for § 600.107–08(b).

(2) ASTM D 1298–99 (Reapproved 2005) Standard Practice for Density, Relative Density (Specific Gravity), or API Gravity of Crude Petroleum and Liquid Petroleum Products by Hydrometer Method, approved November 1, 2005, IBR approved for §§ 600.113–12(f) and (g) and 600.510–12(g).

(3) ASTM D 1945–03 (Reapproved 2010) Standard Test Method for Analysis of Natural Gas By Gas Chromatography, approved January 1, 2010, IBR approved for § 600.113–12(f).

(4) ASTM D 3338/D 3338M–09 Standard Test Method for Estimation of Net Heat of Combustion of Aviation Fuels, approved April 15, 2009, IBR approved for § 600.113–12(f).

(5) ASTM D 3343–05 (Reapproved 2010) Standard Test Method for Estimation of Hydrogen Content of Aviation Fuels, approved October 1, 2010, IBR approved for § 600.113–12(f).

(c) * * *

(2) SAE J1634, Revised October 2012, Battery Electric Vehicle Energy Consumption and Range Test Procedure, IBR approved for §§ 600.116–12(a) and 600.311–12(j) and (k).

(3) SAE J1711, Recommended Practice for Measuring the Exhaust Emissions and Fuel Economy of Hybrid-Electric Vehicles, Including Plug-In Hybrid Vehicles, June 2010, IBR approved for §§ 600.114–12(c) and (f), 600.116–12(b) and (c), and 600.311–12(d), (j), and (k).

* * * * *

Subpart B—[Amended]

§§ 600.113–08 and 600.114–08 [Removed]

■ 191. Remove §§ 600.113–08 and 600.114–08.

■ 192. Section 600.116–12 is amended as follows:

■ a. By revising the section heading.

■ b. By revising paragraph (a)(5).

■ c. By redesignating paragraphs (b) and (c) as paragraphs (c) and (d), respectively.

■ d. By adding a new paragraph (b).

■ e. By revising the redesignated paragraphs (c) introductory text, (c)(1) introductory text, and (c)(2) introductory text.

§ 600.116–12 Special procedures related to electric vehicles and hybrid electric vehicles.

(a) * * *

(5) We may approve alternate measurement procedures with respect to electric vehicles if they are necessary or appropriate for meeting the objectives of this part. For example, we may approve the use of an earlier version of SAE J1634 for carryover vehicles, or if you show that it is equivalent for your vehicle.

* * * * *

(b) Determine performance values for hybrid electric vehicles that have no plug-in capability as specified in §§ 600.210 and 600.311 using the procedures for charge-sustaining operation from SAE J1711 (incorporated by reference in § 600.011). We may approve alternate measurement procedures with respect to these vehicles if that is necessary or appropriate for meeting the objectives of this part.

(c) Determine performance values for hybrid electric vehicles that have plug-in capability as specified in §§ 600.210 and 600.311 using the procedures of SAE J1711 (incorporated by reference in § 600.011), with the following clarifications and modifications:

(1) To determine fuel economy and CREE values to demonstrate compliance with CAFE and GHG standards, calculate composite values representing combined operation during charge-depleting and charge-sustaining operation using the following utility factors except as specified in this paragraph (b):

* * * * *

(2) To determine fuel economy and CO_2 emission values for labeling purposes, calculate composite values representing combined operation during charge-depleting and charge-sustaining operation using the following utility factors except as specified in this paragraph (b):

* * * * *

Subpart C—[Amended]

§§ 600.206–08, 600.207–08, 600.208–08, 600.209–08, and 600.210–08 [Removed]

■ 193. Remove §§ 600.206–08, 600.207–08, 600.208–08, 600.209–08, and 600.210–08.

Subpart D—[Amended]

§§ 600.302–08 and 600.311–08 [Removed]

■ 194. Remove 600.302–08 and 600.311–08.

■ 195. Section 600.311–12 is amended by revising paragraph (g) to read as follows:

§ 600.311–12 Determination of values for fuel economy labels.

* * * * *

(g) *Smog rating.* Establish a rating for exhaust emissions other than CO_2 based on the applicable emission standards for the appropriate model year as shown in Tables 1 through 3 of this section. For Independent Commercial Importers that import vehicles not subject to Tier 2 or Tier 3 emission standards, the vehicle's smog rating is 1. Similarly, if a manufacturer certifies vehicles to emission standards that are less stringent than all the identified standards for any reason, the vehicle's smog rating is 1. If EPA or California emission standards change in the future, we may revise the emission levels corresponding to each rating for future model years as appropriate to reflect the changed standards. If this occurs, we would publish the revised ratings as described in § 600.302–12(k), allowing sufficient lead time to make the changes; we would also expect to initiate a rulemaking to update the smog rating in the regulation.

TABLE 1 OF § 600.311–12—CRITERIA FOR ESTABLISHING SMOG RATING FOR MODEL YEAR 2025 AND LATER

Rating	U.S. EPA Tier 3 emission standard	California Air Resources Board LEV III emission standard
1	Bin 160	LEV 160
2	Bin 125	ULEV125
4	Bin 70	ULEV70
5	Bin 50	ULEV50
6	Bin 30	SULEV30
7	Bin 20	SULEV20
8		TZEV
10	Bin 0	ZEV

TABLE 2 OF § 600.311–12—CRITERIA FOR ESTABLISHING SMOG RATING FOR MODEL YEARS 2018–2024

Rating	U.S. EPA Tier 3 emission standard	U.S EPA Tier 2 emission standard	California Air Resources Board LEV III emission standard
1	Bin 160	Bin 5 through Bin 8	LEV 160
3	Bin 125	Bin 4	ULEV125
5	Bin 70	Bin 3	ULEV70
6	Bin 50		ULEV50
7	Bin 30	Bin 2	SULEV30
8	Bin 20		SULEV20
9			TZEV
10	Bin 0	Bin 1	ZEV

TABLE 3 OF § 600.311–12—CRITERIA FOR ESTABLISHING SMOG RATING THROUGH MODEL YEAR 2017

Rating	U.S. EPA Tier 2 emission standard	California Air Resources Board LEV II emission standard
1		ULEV & LEV II large trucks.
2	Bin 8	SULEV II large trucks.
3	Bin 7	

TABLE 3 OF § 600.311–12—CRITERIA FOR ESTABLISHING SMOG RATING THROUGH MODEL YEAR 2017—Continued

Rating	U.S. EPA Tier 2 emission standard	California Air Resources Board LEV II emission standard
4	Bin 6	LEV II, option 1.
5	Bin 5	LEV II.
6	Bin 4	ULEV II.
7	Bin 3	
8	Bin 2	SULEV II.
9		PZEV.
10	Bin 1	ZEV.

* * * * *

Subpart F—[Amended]

§§ 600.507–08, 600.509–08, 600.510–08, and 600.512–08 [Removed]

■ 196. Remove §§ 600.507–08, 600.509–08, 600.510–08, and 600.512–08.

Appendix IV and Appendix V to Part 600—[Removed and Reserved]

■ 197. Remove and reserve Appendix IV and Appendix V to Part 600.

PART 1036—CONTROL OF EMISSIONS FROM NEW AND IN–USE HEAVY–DUTY HIGHWAY ENGINES

■ 198. The authority citation for part 1036 continues to read as follows:

Authority: 42 U.S.C. 7401–7671q.

Subpart B—[Amended]

■ 199. Section 1036.115 is amended by adding paragraph (b) to read as follows:

§ 1036.115 Other requirements.

* * * * *

(b) You must design and produce your engines to comply with evaporative emission standards as follows:

(1) For complete heavy-duty vehicles you produce, you must certify the vehicles to emission standards as specified in 40 CFR 1037.103.

(2) For incomplete heavy-duty vehicles, and for engines used in vehicles you do not produce, you do not need to certify your engines to evaporative emission standards or otherwise meet those standards. However, vehicle manufacturers certifying their vehicles with your engines may depend on you to produce your engines according to their specifications. Also, your engines must meet applicable exhaust emission standards in the installed configuration.

PART 1037—CONTROL OF EMISSIONS FROM NEW HEAVY–DUTY MOTOR VEHICLES

■ 200. The authority citation for part 1037 continues to read as follows:

Authority: 42 U.S.C. 7401–7671q.

Subpart B—[Amended]

■ 201. Section 1037.101 is amended by revising paragraph (b)(4) and adding paragraph (c)(3) to read as follows:

§ 1037.101 Overview of emission standards for heavy-duty vehicles.

* * * * *

(b) * * *

(4) *Fuel evaporative emissions.* These requirements are described in 40 CFR part 86 and § 1037.103.

(c) * * *

(3) For evaporative and refueling emissions, vehicles are regulated based on the type of fuel they use. Vehicles fueled with volatile liquid fuels or gaseous fuels are subject to evaporative emission standards. Vehicles up to a certain size that are fueled with gasoline, diesel fuel, ethanol, methanol, or LPG are subject to refueling emission standards.

■ 202. A new § 1037.103 is added to read as follows:

§ 1037.103 Evaporative emission standards.

(a) *Applicability.* Evaporative emission standards apply to heavy-duty vehicles as follows:

(1) Complete and incomplete heavy-duty vehicles at or below 14,000 pounds GVWR must meet evaporative and refueling emission standards as specified in 40 CFR part 86, subpart S, instead of the requirements specified in this section, except that incomplete heavy-duty vehicles at or below 14,000 pounds GVWR must meet evaporative emission standards as specified in 40 CFR part 86, subpart A through model year 2017.

(2) Heavy-duty vehicles above 14,000 pounds GVWR that run on volatile liquid fuel (such as gasoline or ethanol) or gaseous fuel (such as natural gas or LPG) must meet evaporative emission standards as specified in this section starting in model year 2018.

(b) *Emission standards.* The evaporative emission standards specified in 40 CFR 86.1813 apply for vehicles subject to standards under this section based on emission measurements using the procedures specified in § 1037.530. These standards phase in over model years 2018 through 2022. Count vehicles subject to standards under this section the same as heavy-duty vehicles at or below 14,000 pounds GVWR to comply with the phase-in requirements specified in 40 CFR 86.1813. These vehicles may generate and use emission credits as described in 40 CFR part 86, subpart S, but only for vehicles that are tested for certification (instead of relying on the provisions of paragraph (c) of this section).

(c) *Compliance demonstration.* You may provide a statement in the application for certification that vehicles comply with evaporative and refueling emission standards instead of submitting test data if you include an engineering analysis describing how vehicles include design parameters, equipment, operating controls, or other elements of design that adequately demonstrate that vehicles comply with the standards. We would expect emission control components and systems to exhibit a comparable degree of control relative to vehicles that comply based on testing. For example, vehicles that comply under this paragraph (c) should rely on comparable material specifications to limit fuel permeation, and components should be sized and calibrated to correspond with the appropriate fuel capacities, fuel flow rates, purge strategies, and other vehicle operating characteristics. You may alternatively show that design parameters are comparable to those for vehicles at or below 14,000 pounds GVWR certified under 40 CFR part 86, subpart S.

(d) *Incomplete vehicles.* If you sell incomplete vehicles, you must identify the maximum fuel tank capacity for which you designed the vehicle's evaporative emission control system.

(e) *Useful life.* Your vehicles must meet the evaporative emission standards of this section throughout their useful life, expressed in service miles or calendar years, whichever comes first. The useful life values for the standards

of this section are those that apply for criteria pollutants under 40 CFR part 86.

(f) *Auxiliary engines and separate fuel systems.* The provisions of this paragraph (g) apply for vehicles with auxiliary engines. This includes any engines installed in the final vehicle configuration that contribute no motive power through the vehicle's transmission.

(1) Auxiliary engines and associated fuel-system components must be installed when testing complete vehicles. If the auxiliary engine draws fuel from a separate fuel tank, you must fill the extra fuel tank before the start of diurnal testing as described for the vehicle's main fuel tank. Use good engineering judgment to ensure that any nonmetal portions of the fuel system related to the auxiliary engine have reached stabilized levels of permeation emissions. The auxiliary engine must not operate during the running loss test or any other portion of testing under this section.

(2) For testing with incomplete vehicles, you may omit installation of auxiliary engines and associated fuel-system components as long as those components installed in the final configuration are certified to meet the applicable emission standards for Small SI equipment described in 40 CFR 1054.112 or for Large SI engines in 40 CFR 1048.105. For any fuel-system components that you do not install, your installation instructions must describe this certification requirement.

■ 203. Section 1037.104 is amended by adding paragraph (h)(2) to read as follows:

§ 1037.104 Exhaust emission standards for CO_2, CH_4, and N_2O for heavy-duty vehicles at or below 14,000 pounds GVWR.

* * * * *

(h) * * *

(2) The evaporative and refueling emission standards in § 1037.103.

* * * * *

Subpart C—[Amended]

■ 204. Section 1037.230 is amended by adding paragraph (e) to read as follows:

§ 1037.230 Vehicle families, sub-families, and configurations.

* * * * *

(e) Divide your vehicles that are subject to evaporative emission standards into groups of vehicles with similar physical features expected to affect evaporative emissions. Group vehicles in the same evaporative emission family if they are the same in all the following aspects, unless we approve a better way of grouping vehicles into families that have similar emission control characteristics:

(1) Method of vapor storage, including the number of vapor storage devices, the working material, and the total working capacity of vapor storage (as determined under 40 CFR 86.132–96(h)(1)(iv)). You may consider the working capacity to be the same if the values differ by 20 grams or less.

(2) Method of purging stored vapors.

(3) Material for liquid and vapor fuel lines.

* * * * *

■ 205. A new § 1037.243 is added to subpart C to read as follows:

§ 1037.243 Demonstrating compliance with evaporative emission standards.

(a) For purposes of certification, your vehicle family is considered in compliance with the evaporative emission standards in subpart B of this part if you prepare an engineering analysis showing that your vehicles in the family will comply with applicable standards throughout the useful life, and there are no test results from an emission-data vehicle representing the family that exceed an emission standard.

(b) Your evaporative emission family is deemed not to comply if your engineering analysis is not adequate to show that all the vehicles in the family will comply with applicable emission standards throughout the useful life, or if a test result from an emission-data vehicle representing the family exceeds an emission standard.

(c) To compare emission levels with emission standards, apply deterioration factors to the measured emission levels. Establish an additive deterioration factor based on an engineering analysis that takes into account the expected aging from in-use vehicles.

(d) Apply the deterioration factor to the official emission result, as described in paragraph (c) of this section, then round the adjusted figure to the same number of decimal places as the emission standard. Compare the rounded emission levels to the emission standard for each emission-data vehicle.

(e) Your analysis to demonstrate compliance with emission standards must take into account your design strategy for vehicles that require testing. Specifically, vehicles above 14,000 pounds GVWR are presumed to need the same technologies that are required for heavy-duty vehicles at or below 14,000 pounds GVWR. Similarly, your analysis to establish a deterioration factor must take into account your testing to establish deterioration factors for smaller vehicles.

Subpart F—[Amended]

■ 206. Section 1037.501 is amended by adding paragraph (a) to read as follows:

§ 1037.501 General testing and modeling provisions.

* * * * *

(a) Use the equipment and procedures specified in § 1037.530 to determine whether vehicles meet the diurnal, running loss, and hot soak emission standards specified in § 1037.103.

* * * * *

■ 207. A new § 1037.530 is added to subpart F to read as follows:

§ 1037.530 Evaporative emission test procedures.

Apply the provisions of 40 CFR part 86, subpart B, to demonstrate compliance with the diurnal, running loss, and hot soak emission standards as specified in § 1037.103, with the following exceptions:

(a) Use drive cycles for heavy-duty vehicles as follows:

(1) The Heavy-Duty Urban Dynamometer Driving Schedule (HD–UDDS) is specified in 40 CFR part 86, Appendix I, paragraph (d). It represents about 5.6 miles of driving for a heavy-duty vehicle in an urban area.

(2) For the preconditioning drive, operate the vehicle over one HD–UDDS instead of the drive specified in 40 CFR 86.132.

(3) For the dynamometer run preceding the diurnal emission test, operate the vehicle over one HD–UDDS instead of the FTP driving schedule.

(4) For performing the running loss test and developing fuel tank temperature profiles, operate the vehicle over three consecutive HD–UDDS cycles, each separated by two minutes if idle operation, instead of the driving specified in 40 CFR 86.134.

(b) The vehicle may be driven onto the dynamometer, as long as the vehicle is driven at minimum throttle and the total time of engine operation in the soak period before the diurnal emission test does not exceed 3 minutes.

(c) Testing under this subpart does not require measurement of exhaust emissions. Disregard references in 40 CFR part 86, subpart B, to procedures, equipment specifications, and recordkeeping related to measuring exhaust emissions. All references to the exhaust test under 40 CFR part 86, subpart B, are considered the ''dynamometer run'' as part of the evaporative testing sequence under this subpart.

PART 1065—ENGINE–TESTING PROCEDURES

■ 208. The authority citation for part 1065 continues to read as follows:

Authority: 42 U.S.C. 7401–7671q.

Subpart A—[Amended]

■ 209. Section 1065.1 is amended by revising paragraph (h) to read as follows:

§ 1065.1 Applicability.

* * * * *

(h) This part describes procedures and specifications for measuring an engine's exhaust emissions. While the measurements are geared toward engine-based measurements (in units of g/kW·hr), many of these provisions apply equally to vehicle-based measurements (in units of g/mile or g/kilometer). 40 CFR part 1066 describes the analogous procedures for vehicle-based emission measurements, and in many cases states that specific provisions of this part 1065 also apply for those vehicle-based measurements. Where material from this part 1065 applies for vehicle-based measurements under 40 CFR part 1066, it is sometimes necessary to include parenthetical statements in this part 1065 to properly cite secondary references that are different for vehicle-based testing. See 40 CFR part 1066 and the standard-setting part for additional information.

■ 210. Section 1065.15 is amended by revising paragraphs (a) and (b) to read as follows:

§ 1065.15 Overview of procedures for laboratory and field testing.

* * * * *

(a) In the standard-setting part, we set brake-specific emission standards in g/(kW·hr) (or g/(hp·hr)), for the following constituents:

(1) Total oxides of nitrogen, NO_X.

(2) Hydrocarbons (HC), which may be expressed in the following ways:

(i) Total hydrocarbons, THC.

(ii) Nonmethane hydrocarbons, NMHC, which results from subtracting methane (CH_4) from THC.

(iii) Total hydrocarbon-equivalent, THCE, which results from adjusting THC mathematically to be equivalent on a carbon-mass basis.

(iv) Nonmethane hydrocarbon-equivalent, NMHCE, which results from adjusting NMHC mathematically to be equivalent on a carbon-mass basis.

(3) Particulate mass, PM.

(4) Carbon monoxide, CO.

(5) Carbon dioxide, CO_2.

(6) Methane, CH_4.

(7) Nitrous oxide, N_2O.

(b) Note that some engines are not subject to standards for all the emission constituents identified in paragraph (a) of this section. Note also that the standard-setting part may include standards for pollutants not listed in paragraph (a) of this section.

* * * * *

■ 211. Section 1065.20 is amended by italicizing the heading for paragraph (g) and revising paragraphs (a), (b), and (c) to read as follows:

§ 1065.20 Units of measure and overview of calculations.

(a) *System of units.* The procedures in this part generally follow the International System of Units (SI), as detailed in NIST Special Publication 811, which we incorporate by reference in § 1065.1010. The following exceptions apply:

(1) We designate angular speed, f_n, of an engine's crankshaft in revolutions per minute (r/min), rather than the SI unit of radians per second (rad/s). This is based on the commonplace use of r/min in many engine dynamometer laboratories.

(2) We designate brake-specific emissions in grams per kilowatt-hour (g/(kW·hr)), rather than the SI unit of grams per megajoule (g/MJ). In addition, we use the symbol *hr* to identify hour, rather than the SI convention of using *h*. This is based on the fact that engines are generally subject to emission standards expressed in g/kW·hr. If we specify engine standards in grams per horsepower·hour (g/(hp·hr)) in the standard-setting part, convert units as specified in paragraph (d) of this section.

(3) We designate temperatures in units of degrees Celsius (°C) unless a calculation requires an absolute temperature. In that case, we designate temperatures in units of Kelvin (K). For conversion purposes throughout this part, 0 °C equals 273.15 K. Always use absolute temperature values for multiplying or dividing by temperature.

(b) *Concentrations.* This part does not rely on amounts expressed in parts per million. Rather, we express such amounts in the following SI units:

(1) For ideal gases, μmol/mol, formerly ppm (volume).

(2) For all substances, cm^3/m^3, formerly ppm (volume).

(3) For all substances, mg/kg, formerly ppm (mass).

(c) *Absolute pressure.* Measure absolute pressure directly or calculate it as the sum of atmospheric pressure plus a differential pressure that is referenced to atmospheric pressure. Always use absolute pressure values for multiplying or dividing by pressure.

* * * * *

■ 212. Section 1065.25 is revised to read as follows:

§ 1065.25 Recordkeeping.

The procedures in this part include various requirements to record data or other information. Refer to the standard-setting part and § 1065.695 regarding recordkeeping requirements. You must promptly send us organized, written records in English if we ask for them. We may review them at any time.

Subpart B—[Amended]

■ 213. Section 1065.130 is amended by revising paragraph (a) to read as follows:

§ 1065.130 Engine exhaust.

(a) *General.* Use the exhaust system installed with the engine or one that represents a typical in-use configuration. This includes any applicable aftertreatment devices. We refer to exhaust piping as an exhaust stack; this is equivalent to a tailpipe for vehicle configurations.

* * * * *

■ 214. Section 1065.140 is revised to read as follows:

§ 1065.140 Dilution for gaseous and PM constituents.

(a) *General.* You may dilute exhaust with ambient air, purified air, or nitrogen. References in this part to ''dilution air'' may include any of these. For gaseous emission measurement, the dilution air must be at least 15 °C. Note that the composition of the dilution air affects some gaseous emission measurement instruments' response to emissions. We recommend diluting exhaust at a location as close as possible to the location where ambient air dilution would occur in use. Dilution may occur in a single stage or in multiple stages. For dilution in multiple stages, the first stage is considered primary dilution and later stages are considered secondary dilution.

(b) *Dilution-air conditions and background concentrations.* Before dilution air is mixed with exhaust, you may precondition it by increasing or decreasing its temperature or humidity. You may also remove constituents to reduce their background concentrations. The following provisions apply to removing constituents or accounting for background concentrations:

(1) You may measure constituent concentrations in the dilution air and compensate for background effects on test results. See § 1065.650 for calculations that compensate for background concentrations (40 CFR 1066.620 for vehicle testing).

(2) Measure these background concentrations the same way you

measure diluted exhaust constituents, or measure them in a way that does not affect your ability to demonstrate compliance with the applicable standards. For example, you may use the following simplifications for background sampling:

(i) You may disregard any proportional sampling requirements.

(ii) You may use unheated gaseous sampling systems.

(iii) You may use unheated PM sampling systems.

(iv) You may use continuous sampling if you use batch sampling for diluted emissions.

(v) You may use batch sampling if you use continuous sampling for diluted emissions.

(3) For removing background PM, we recommend that you filter all dilution air, including primary full-flow dilution air, with high-efficiency particulate air (HEPA) filters that have an initial minimum collection efficiency specification of 99.97% (see § 1065.1001 for procedures related to HEPA-filtration efficiencies). Ensure that HEPA filters are installed properly so that background PM does not leak past the HEPA filters. If you choose to correct for background PM without using HEPA filtration, demonstrate that the background PM in the dilution air contributes less than 50% to the net PM collected on the sample filter. You may correct net PM without restriction if you use HEPA filtration.

(c) *Full-flow dilution; constant-volume sampling (CVS).* You may dilute the full flow of raw exhaust in a dilution tunnel that maintains a nominally constant volume flow rate, molar flow rate or mass flow rate of diluted exhaust, as follows:

(1) *Construction.* Use a tunnel with inside surfaces of 300 series stainless steel. Electrically ground the entire dilution tunnel. We recommend a thin-walled and insulated dilution tunnel to minimize temperature differences between the wall and the exhaust gases. You may not use any flexible tubing in the dilution tunnel upstream of the PM sample probe. You may use nonconductive flexible tubing downstream of the PM sample probe and upstream of the CVS flow meter; use good engineering judgment to select a tubing material that is not prone to leaks, and configure the tubing to ensure smooth flow at the CVS flow meter.

(2) *Pressure control.* Maintain static pressure at the location where raw exhaust is introduced into the tunnel within ±1.2 kPa of atmospheric pressure. You may use a booster blower to control this pressure. If you test using more careful pressure control and you show by engineering analysis or by test data that you require this level of control to demonstrate compliance at the applicable standards, we will maintain the same level of static pressure control when we test.

(3) *Mixing.* Introduce raw exhaust into the tunnel by directing it downstream along the centerline of the tunnel. If you dilute directly from the exhaust stack, the end of the exhaust stack is considered to be the start of the dilution tunnel. You may introduce a fraction of dilution air radially from the tunnel's inner surface to minimize exhaust interaction with the tunnel walls. You may configure the system with turbulence generators such as orifice plates or fins to achieve good mixing. We recommend a minimum Reynolds number, *Re#*, of 4000 for the diluted exhaust stream, where *Re#* is based on the inside diameter of the dilution tunnel. *Re#* is defined in § 1065.640.

(4) *Flow measurement preconditioning.* You may condition the diluted exhaust before measuring its flow rate, as long as this conditioning takes place downstream of any heated HC or PM sample probes, as follows:

(i) You may use flow straighteners, pulsation dampeners, or both of these.

(ii) You may use a filter.

(iii) You may use a heat exchanger to control the temperature upstream of any flow meter, but you must take steps to prevent aqueous condensation as described in paragraph (c)(6) of this section.

(5) *Flow measurement.* Section 1065.240 describes measurement instruments for diluted exhaust flow.

(6) *Aqueous condensation.* This paragraph (c)(6) describes how you must address aqueous condensation in the CVS. As described below, you may meet these requirements by preventing or limiting aqueous condensation in the CVS from the exhaust inlet to the last emission sample probe. See that paragraph for provisions related to the CVS between the last emission sample probe and the CVS flow meter. You may heat and/or insulate the dilution tunnel walls, as well as the bulk stream tubing downstream of the tunnel to prevent or limit aqueous condensation. Where we allow aqueous condensation to occur, use good engineering judgment to ensure that the condensation does not affect your ability to demonstrate that your engines comply with the applicable standards (see § 1065.10(a)).

(i) *Preventing aqueous condensation.* To prevent condensation, you must keep the temperature of internal surfaces, excluding any sample probes, above the dew point of the dilute exhaust passing through the CVS tunnel. Use good engineering judgment to monitor temperatures in the CVS. For the purposes of this paragraph (c)(6), assume that aqueous condensation is pure water condensate only, even though the definition of ''aqueous condensation'' in § 1065.1001 includes condensation of any constituents that contain water. No specific verification check is required under this paragraph (c)(6)(i), but we may ask you to show how you comply with this requirement. You may use engineering analysis, CVS tunnel design, alarm systems, measurements of wall temperatures, and calculation of water dew point to demonstrate compliance with this requirement. For optional CVS heat exchangers, you may use the lowest water temperature at the inlet(s) and outlet(s) to determine the minimum internal surface temperature.

(ii) *Limiting aqueous condensation.* This paragraph (c)(6)(ii) specifies limits of allowable condensation and requires you to verify that the amount of condensation that occurs during each test interval does not exceed the specified limits.

(A) Use chemical balance equations in § 1065.655 to calculate the mole fraction of water in the dilute exhaust continuously during testing. Alternatively, you may continuously measure the mole fraction of water in the dilute exhaust prior to any condensation during testing. Use good engineering judgment to select, calibrate and verify water analyzers/detectors. The linearity verification requirements of § 1065.307 do not apply to water analyzers/detectors used to correct for the water content in exhaust samples.

(B) Use good engineering judgment to select and monitor locations on the CVS tunnel walls prior to the last emission sample probe. If you are also verifying limited condensation from the last emission sample probe to the CVS flow meter, use good engineering judgment to select and monitor locations on the CVS tunnel walls, optional CVS heat exchanger, and CVS flow meter. For optional CVS heat exchangers, you may use the lowest water temperature at the inlet(s) and outlet(s) to determine the minimum internal surface temperature. Identify the minimum surface temperature on a continuous basis.

(C) Identify the maximum potential mole fraction of dilute exhaust lost on a continuous basis during the entire test interval. This value must be less than or equal to 0.02. Calculate on a continuous basis the mole fraction of water that would be in equilibrium with liquid water at the measured minimum surface temperature. Subtract this mole fraction from the mole fraction of water that

would be in the exhaust without condensation (either measured or from the chemical balance), and set any negative values to zero. This difference is the potential mole fraction of the dilute exhaust that would be lost due to water condensation on a continuous basis.

(D) Integrate the product of the molar flow rate of the dilute exhaust and the potential mole fraction of dilute exhaust lost, and divide by the totalized dilute exhaust molar flow over the test interval. This is the potential mole fraction of the dilute exhaust that would be lost due to water condensation over the entire test interval. Note that this assumes no re-evaporation. This value must be less than or equal to 0.005.

(7) *Flow compensation.* Maintain nominally constant molar, volumetric or mass flow of diluted exhaust. You may maintain nominally constant flow by either maintaining the temperature and pressure at the flow meter or by directly controlling the flow of diluted exhaust. You may also directly control the flow of proportional samplers to maintain proportional sampling. For an individual test, verify proportional sampling as described in § 1065.545.

(d) *Partial-flow dilution (PFD).* You may dilute a partial flow of raw or previously diluted exhaust before measuring emissions. Section 1065.240 describes PFD-related flow measurement instruments. PFD may consist of constant or varying dilution ratios as described in paragraphs (d)(2) and (3) of this section. An example of a constant dilution ratio PFD is a ''secondary dilution PM'' measurement system.

(1) *Applicability.* (i) You may use PFD to extract a proportional raw exhaust sample for any batch or continuous PM emission sampling over any transient duty cycle, any steady-state duty cycle, or any ramped-modal cycle.

(ii) You may use PFD to extract a proportional raw exhaust sample for any batch or continuous gaseous emission sampling over any transient duty cycle, any steady-state duty cycle, or any ramped-modal cycle.

(iii) You may use PFD to extract a proportional raw exhaust sample for any batch or continuous field-testing.

(iv) You may use PFD to extract a proportional diluted exhaust sample from a CVS for any batch or continuous emission sampling.

(v) You may use PFD to extract a constant raw or diluted exhaust sample for any continuous emission sampling.

(vi) You may use PFD to extract a constant raw or diluted exhaust sample for any steady-state emission sampling.

(2) *Constant dilution-ratio PFD.* Do one of the following for constant dilution-ratio PFD:

(i) Dilute an already proportional flow. For example, you may do this as a way of performing secondary dilution from a CVS tunnel to achieve overall dilution ratio for PM sampling.

(ii) Continuously measure constituent concentrations. For example, you might dilute to precondition a sample of raw exhaust to control its temperature, humidity, or constituent concentrations upstream of continuous analyzers. In this case, you must take into account the dilution ratio before multiplying the continuous concentration by the sampled exhaust flow rate.

(iii) Extract a proportional sample from a separate constant dilution ratio PFD system. For example, you might use a variable-flow pump to proportionally fill a gaseous storage medium such as a bag from a PFD system. In this case, the proportional sampling must meet the same specifications as varying dilution ratio PFD in paragraph (d)(3) of this section.

(iv) For each mode of a discrete-mode test (such as a locomotive notch setting or a specific setting for speed and torque), use a constant dilution ratio for any PM sampling. You must change the overall PM sampling system dilution ratio between modes so that the dilution ratio on the mode with the highest exhaust flow rate meets § 1065.140(e)(2) and the dilution ratios on all other modes is higher than this (minimum) dilution ratio by the ratio of the maximum exhaust flow rate to the exhaust flow rate of the corresponding other mode. This is the same dilution ratio requirement for RMC or field transient testing. You must account for this change in dilution ratio in your emission calculations.

(3) *Varying dilution-ratio PFD.* All the following provisions apply for varying dilution-ratio PFD:

(i) Use a control system with sensors and actuators that can maintain proportional sampling over intervals as short as 200 ms (i.e., 5 Hz control).

(ii) For control input, you may use any sensor output from one or more measurements; for example, intake-air flow, fuel flow, exhaust flow, engine speed, and intake manifold temperature and pressure.

(iii) Account for any emission transit time in the PFD system, as necessary.

(iv) You may use preprogrammed data if they have been determined for the specific test site, duty cycle, and test engine from which you dilute emissions.

(v) We recommend that you run practice cycles to meet the verification criteria in § 1065.545. Note that you must verify every emission test by meeting the verification criteria with the data from that specific test. Data from previously verified practice cycles or other tests may not be used to verify a different emission test.

(vi) You may not use a PFD system that requires preparatory tuning or calibration with a CVS or with the emission results from a CVS. Rather, you must be able to independently calibrate the PFD.

(e) *Dilution air temperature, dilution ratio, residence time, and temperature control of PM samples.* Dilute PM samples at least once upstream of transfer lines. You may dilute PM samples upstream of a transfer line using full-flow dilution, or partial-flow dilution immediately downstream of a PM probe. In the case of partial-flow dilution, you may have up to 26 cm of insulated length between the end of the probe and the dilution stage, but we recommend that the length be as short as practical. The intent of these specifications is to minimize heat transfer to or from the emission sample before the final stage of dilution, other than the heat you may need to add to prevent aqueous condensation. This is accomplished by initially cooling the sample through dilution. Configure dilution systems as follows:

(1) Set the dilution air temperature to (25 ±5) °C. Use good engineering judgment to select a location to measure this temperature that is as close as practical upstream of the point where dilution air mixes with raw exhaust.

(2) For any PM dilution system (i.e., CVS or PFD), add dilution air to the raw exhaust such that the minimum overall ratio of diluted exhaust to raw exhaust is within the range of (5:1 to 7:1) and is at least 2:1 for any primary dilution stage. Base this minimum value on the maximum engine exhaust flow rate for a given test interval. Either measure the maximum exhaust flow during a practice run of the test interval or estimate it based on good engineering judgment (for example, you might rely on manufacturer-published literature).

(3) Configure any PM dilution system to have an overall residence time of (1.0 to 5.5) s, as measured from the location of initial dilution air introduction to the location where PM is collected on the sample media. Also configure the system to have a residence time of at least 0.50 s, as measured from the location of final dilution air introduction to the location where PM is collected on the sample media. When determining residence times within sampling system volumes, use an

assumed flow temperature of 25 °C and pressure of 101.325 kPa.

(4) Control sample temperature to a (47 ±5) °C tolerance, as measured anywhere within 20 cm upstream or downstream of the PM storage media (such as a filter). Measure this temperature with a bare-wire junction thermocouple with wires that are (0.500 ±0.025) mm diameter, or with another suitable instrument that has equivalent performance.

■ 215. Section 1065.145 is amended by revising paragraphs (a), (c), (d), and (e) to read as follows:

§ 1065.145 Gaseous and PM probes, transfer lines, and sampling system components.

(a) *Continuous and batch sampling.* Determine the total mass of each constituent with continuous or batch sampling. Both types of sampling systems have probes, transfer lines, and other sampling system components that are described in this section.

* * * * *

(c) *Gaseous and PM sample probes.* A probe is the first fitting in a sampling system. It protrudes into a raw or diluted exhaust stream to extract a sample, such that its inside and outside surfaces are in contact with the exhaust. A sample is transported out of a probe into a transfer line, as described in paragraph (d) of this section. The following provisions apply to sample probes:

(1) *Probe design and construction.* Use sample probes with inside surfaces of 300 series stainless steel or, for raw exhaust sampling, use any nonreactive material capable of withstanding raw exhaust temperatures. Locate sample probes where constituents are mixed to their mean sample concentration. Take into account the mixing of any crankcase emissions that may be routed into the raw exhaust. Locate each probe to minimize interference with the flow to other probes. We recommend that all probes remain free from influences of boundary layers, wakes, and eddies—especially near the outlet of a raw-exhaust stack where unintended dilution might occur. Make sure that purging or back-flushing of a probe does not influence another probe during testing. You may use a single probe to extract a sample of more than one constituent as long as the probe meets all the specifications for each constituent.

(2) *Gaseous sample probes.* Use either single-port or multi-port probes for sampling gaseous emissions. You may orient these probes in any direction relative to the raw or diluted exhaust flow. For some probes, you must control sample temperatures, as follows:

(i) For probes that extract NO_X from diluted exhaust, control the probe's wall temperature to prevent aqueous condensation.

(ii) For probes that extract hydrocarbons for THC or NMHC analysis from the diluted exhaust of compression-ignition engines, two-stroke spark-ignition engines, or four-stroke spark-ignition engines at or below 19 kW, we recommend heating the probe to minimize hydrocarbon contamination consistent with good engineering judgment. If you routinely fail the contamination check in the 1065.520 pretest check, we recommend heating the probe section to approximately 190 °C to minimize contamination.

(3) *PM sample probes.* Use PM probes with a single opening at the end. Orient PM probes to face directly upstream. If you shield a PM probe's opening with a PM pre-classifier such as a hat, you may not use the preclassifier we specify in paragraph (f)(1) of this section. We recommend sizing the inside diameter of PM probes to approximate isokinetic sampling at the expected mean flow rate.

(d) *Transfer lines.* You may use transfer lines to transport an extracted sample from a probe to an analyzer, storage medium, or dilution system, noting certain restrictions for PM sampling in § 1065.140(e). Minimize the length of all transfer lines by locating analyzers, storage media, and dilution systems as close to probes as practical. We recommend that you minimize the number of bends in transfer lines and that you maximize the radius of any unavoidable bend. Avoid using 90° elbows, tees, and cross-fittings in transfer lines. Where such connections and fittings are necessary, take steps, using good engineering judgment, to ensure that you meet the temperature tolerances in this paragraph (d). This may involve measuring temperature at various locations within transfer lines and fittings. You may use a single transfer line to transport a sample of more than one constituent, as long as the transfer line meets all the specifications for each constituent. The following construction and temperature tolerances apply to transfer lines:

(1) *Gaseous samples.* Use transfer lines with inside surfaces of 300 series stainless steel, PTFE, Viton™, or any other material that you demonstrate has better properties for emission sampling. For raw exhaust sampling, use a non-reactive material capable of withstanding raw exhaust temperatures. You may use in-line filters if they do not react with exhaust constituents and if the filter and its housing meet the same temperature requirements as the transfer lines, as follows:

(i) For NO_X transfer lines upstream of either an NO_2-to-NO converter that meets the specifications of § 1065.378 or a chiller that meets the specifications of § 1065.376, maintain a sample temperature that prevents aqueous condensation.

(ii) For THC transfer lines for testing compression-ignition engines, two-stroke spark-ignition engines, or four-stroke spark-ignition engines at or below 19 kW, maintain a wall temperature tolerance throughout the entire line of (191 ±11) °C. If you sample from raw exhaust, you may connect an unheated, insulated transfer line directly to a probe. Design the length and insulation of the transfer line to cool the highest expected raw exhaust temperature to no lower than 191 °C, as measured at the transfer line's outlet. For dilute sampling, you may use a transition zone between the probe and transfer line of up to 92 cm to allow your wall temperature to transition to (191 ±11) °C.

(2) *PM samples.* We recommend heated transfer lines or a heated enclosure to minimize temperature differences between transfer lines and exhaust constituents. Use transfer lines that are inert with respect to PM and are electrically conductive on the inside surfaces. We recommend using PM transfer lines made of 300 series stainless steel. Electrically ground the inside surface of PM transfer lines.

(e) *Optional sample-conditioning components for gaseous sampling.* You may use the following sample-conditioning components to prepare gaseous samples for analysis, as long as you do not install or use them in a way that adversely affects your ability to show that your engines comply with all applicable gaseous emission standards.

(1) *NO_2*-to-NO converter. You may use an NO_2-to-NO converter that meets the converter conversion verification specified in § 1065.378 at any point upstream of a NO_X analyzer, sample bag, or other storage medium.

(2) *Sample dryer.* You may use either type of sample dryer described in this paragraph (e)(2) to decrease the effects of water on gaseous emission measurements. You may not use a chemical dryer, or use dryers upstream of PM sample filters.

(i) *Osmotic-membrane.* You may use an osmotic-membrane dryer upstream of any gaseous analyzer or storage medium, as long as it meets the temperature specifications in paragraph (d)(1) of this section. Because osmotic-

membrane dryers may deteriorate after prolonged exposure to certain exhaust constituents, consult with the membrane manufacturer regarding your application before incorporating an osmotic-membrane dryer. Monitor the dewpoint, $T_{dew,}$ and absolute pressure, $p_{total,}$ downstream of an osmotic-membrane dryer. You may use continuously recorded values of T_{dew} and p_{total} in the amount of water calculations specified in § 1065.645. For our testing we may use average temperature and pressure values over the test interval or a nominal pressure value that we estimate as the dryer's average pressure expected during testing as constant values in the amount of water calculations specified in § 1065.645. For your testing, you may use the maximum temperature or minimum pressure values observed during a test interval or duty cycle or the high alarm temperature setpoint or low alarm pressure setpoint as constant values in the calculations specified in § 1065.645. For your testing, you may also use a nominal $p_{total,}$ which you may estimate as the dryer's lowest absolute pressure expected during testing.

(ii) *Thermal chiller.* You may use a thermal chiller upstream of some gas analyzers and storage media. You may not use a thermal chiller upstream of a THC measurement system for compression-ignition engines, two-stroke spark-ignition engines, or four-stroke spark-ignition engines at or below 19 kW. If you use a thermal chiller upstream of an NO_2-to-NO converter or in a sampling system without an NO_2-to-NO converter, the chiller must meet the NO_2 loss-performance check specified in § 1065.376. Monitor the dewpoint, $T_{dew,}$ and absolute pressure, $p_{total,}$ downstream of a thermal chiller. You may use continuously recorded values of T_{dew} and p_{total} in the amount of water calculations specified in § 1065.645. If it is valid to assume the degree of saturation in the thermal chiller, you may calculate T_{dew} based on the known chiller performance and continuous monitoring of chiller temperature, $T_{chiller.}$ If it is valid to assume a constant temperature offset between $T_{chiller}$ and $T_{dew,}$ due to a known and fixed amount of sample reheat between the chiller outlet and the temperature measurement location, you may factor in this assumed temperature offset value into emission calculations. If we ask for it, you must show by engineering analysis or by data the validity of any assumptions allowed by this paragraph (e)(2)(ii). For our testing we may use average temperature and pressure values over the test interval or a nominal pressure value that we estimate as the dryer's average pressure expected during testing as constant values in the calculations specified in § 1065.645. For your testing you may use the maximum temperature and minimum pressure values observed during a test interval or duty cycle or the high alarm temperature setpoint and the low alarm pressure setpoint as constant values in the amount of water calculations specified in § 1065.645. For your testing you may also use a nominal $p_{total,}$ which you may estimate as the dryer's lowest absolute pressure expected during testing.

(3) *Sample pumps.* You may use sample pumps upstream of an analyzer or storage medium for any gas. Use sample pumps with inside surfaces of 300 series stainless steel, PTFE, or any other material that you demonstrate has better properties for emission sampling. For some sample pumps, you must control temperatures, as follows:

(i) If you use a NO_X sample pump upstream of either an NO_2-to-NO converter that meets § 1065.378 or a chiller that meets § 1065.376, it must be heated to prevent aqueous condensation.

(ii) For testing compression-ignition engines, 2-stroke spark-ignition engines, or four-stroke spark-ignition engines at or below 19 kW, if you use a THC sample pump upstream of a THC analyzer or storage medium, its inner surfaces must be heated to a tolerance of (191 ±11) °C.

(4) *Ammonia Scrubber.* You may use ammonia scrubbers for any or all gaseous sampling systems to prevent interference with NH_3, poisoning of the NO_2-to-NO converter, and deposits in the sampling system or analyzers. Follow the ammonia scrubber manufacturer's recommendations or use good engineering judgment in applying ammonia scrubbers.

* * * * *

■ 216. Section 1065.170 is amended by revising paragraphs (a)(1), (b), and (c)(1)(i) to read as follows:

§ 1065.170 Batch sampling for gaseous and PM constituents.

* * * * *

(a) * * *

(1) Verify proportional sampling after an emission test as described in § 1065.545. Use good engineering judgment to select storage media that will not significantly change measured emission levels (either up or down). For example, do not use sample bags for storing emissions if the bags are permeable with respect to emissions or if they off gas emissions to the extent that it affects your ability to demonstrate compliance with the applicable gaseous emission standards. As another example, do not use PM filters that irreversibly absorb or adsorb gases to the extent that it affects your ability to demonstrate compliance with the applicable PM emission standard.

* * * * *

(b) *Gaseous sample storage media.* Store gas volumes in sufficiently clean containers that minimally off-gas or allow permeation of gases. Use good engineering judgment to determine acceptable thresholds of storage media cleanliness and permeation. To clean a container, you may repeatedly purge and evacuate a container and you may heat it. Use a flexible container (such as a bag) within a temperature-controlled environment, or use a temperature controlled rigid container that is initially evacuated or has a volume that can be displaced, such as a piston and cylinder arrangement. Use containers meeting the specifications in the Table1 of this section, noting that you may request to use other container materials under § 1065.10. Sample temperatures must stay within the following ranges for each container material:

(1) Up to 40 °C for Tedlar™ and Kynar™.

(2) (191 ±11) °C for Teflon™ and 300 series stainless steel used with measuring THC or NMHC from compression-ignition engines, two-stroke spark-ignition engines, and four-stroke spark-ignition engines at or below 19 kW. For all other engines and pollutants, these materials are good for sample temperatures up to 202 °C.

TABLE 1 OF § 1065.170—CONTAINER MATERIALS FOR GASEOUS BATCH SAMPLING

Emissions	Engine type	
	Compression-ignition Two-stroke spark-ignition Four-stroke spark-ignition at or below 19 kW	All other engines
CO, CO_2, O_2, CH_4, C_2H_6, C_3H_8, NO, NO_2, N_2O.	Tedlar™, Kynar™, Teflon™, or 300 series stainless steel.	Tedlar™, Kynar™, Teflon™, or 300 series stainless steel.
THC, NMHC	Teflon™ or 300 series stainless steel	Tedlar™, Kynar™, Teflon™, or 300 series stainless steel.

(c) * * *

(1) * * *

(i) If you expect that a filter's total surface concentration of PM will exceed 400 μg, assuming a 38 mm diameter filter stain area, for a given test interval, you may use filter media with a minimum initial collection efficiency of 98%; otherwise you must use a filter media with a minimum initial collection efficiency of 99.7%. Collection efficiency must be measured as described in ASTM D2986 (incorporated by reference in § 1065.1010), though you may rely on the sample-media manufacturer's measurements reflected in their product ratings to show that you meet this requirement.

* * * * *

Subpart C—[Amended]

■ 217. Section 1065.201 is amended by revising paragraphs (b), (d), (e), and (h) to read as follows:

§ 1065.201 Overview and general provisions.

* * * * *

(b) *Instrument types.* You may use any of the specified instruments as described in this subpart to perform emission tests. If you want to use one of these instruments in a way that is not specified in this subpart, or if you want to use a different instrument, you must first get us to approve your alternate procedure under § 1065.10. Where we specify more than one instrument for a particular measurement, we may identify which instrument serves as the reference for comparing with an alternate procedure. You may generally use instruments with compensation algorithms that are functions of other gaseous measurements and the engine's known or assumed fuel properties. The target value for any compensation algorithm is 0% (that is, no bias high and no bias low), regardless of the uncompensated signal's bias.

* * * * *

(d) *Redundant systems.* For all measurement instruments described in this subpart, you may use data from multiple instruments to calculate test results for a single test. If you use redundant systems, use good engineering judgment to use multiple measured values in calculations or to disregard individual measurements. Note that you must keep your results from all measurements. This requirement applies whether or not you actually use the measurements in your calculations.

(e) *Range.* You may use an instrument's response above 100% of its operating range if this does not affect your ability to show that your engines comply with the applicable emission standards. Note that we require additional testing and reporting if an analyzer responds above 100% of its range. Auto-ranging analyzers do not require additional testing or reporting.

* * * * *

(h) *Recommended practices.* This subpart identifies a variety of recommended but not required practices for proper measurements. We believe in most cases it is necessary to follow these recommended practices for accurate and repeatable measurements. However, we do not specifically require you to follow these recommended practices to perform a valid test, as long as you meet the required calibrations and verifications of measurement systems specified in subpart D of this part. Similarly, we are not required to follow all recommended practices, as long as we meet the required calibrations and verifications. Our decision to follow or not follow a given recommendation when we perform a test does not depend on whether you followed it during your testing.

■ 218. Section 1065.202 is revised to read as follows:

§ 1065.202 Data updating, recording, and control.

Your test system must be able to update data, record data and control systems related to operator demand, the dynamometer, sampling equipment, and measurement instruments. Use data acquisition and control systems that can record at the specified minimum frequencies, as follows:

TABLE 1 OF § 1065.202—DATA RECORDING AND CONTROL MINIMUM FREQUENCIES

Applicable test protocol section	Measured values	Minimum command and control frequency	Minimum recording frequency
§ 1065.510	Speed and torque during an engine step-map	1 Hz	1 mean value per step.
§ 1065.510	Speed and torque during an engine sweep-map	5 Hz	1 Hz means.
§ 1065.514 § 1065.530	Transient duty cycle reference and feedback speeds and torques.	5 Hz	1 Hz means.
§ 1065.514 § 1065.530	Steady-state and ramped-modal duty cycle reference and feedback speeds and torques.	1 Hz	1 Hz.
§ 1065.520 § 1065.530 § 1065.550	Continuous concentrations of raw or dilute analyzers	N/A	1 Hz.
§ 1065.520 § 1065.530 § 1065.550	Batch concentrations of raw or dilute analyzers	N/A	1 mean value per test interval.

TABLE 1 OF § 1065.202—DATA RECORDING AND CONTROL MINIMUM FREQUENCIES—Continued

Applicable test protocol section	Measured values	Minimum command and control frequency	Minimum recording frequency
§ 1065.530 § 1065.545	Diluted exhaust flow rate from a CVS with a heat exchanger upstream of the flow measurement.	N/A	1 Hz.
§ 1065.530 § 1065.545	Diluted exhaust flow rate from a CVS without a heat exchanger upstream of the flow measurement.	N/A	1 Hz means.
§ 1065.530 § 1065.545	Intake-air or raw-exhaust flow rate	N/A	1 Hz means.
§ 1065.530 § 1065.545	Dilution air if actively controlled	5 Hz	1 Hz means.
§ 1065.530 § 1065.545	Sample flow from a CVS that has a heat exchanger	1 Hz	1 Hz.
§ 1065.530 § 1065.545	Sample flow from a CVS does not have a heat exchanger	5 Hz	1 Hz means.

■ 219. Section 1065.205 is amended by revising the introductory text to read as follows:

§ 1065.205 Performance specifications for measurement instruments.

Your test system as a whole must meet all the calibrations, verifications, and test-validation criteria specified outside of this section for laboratory testing or field testing, as applicable. We recommend that your instruments meet the specifications in Table 1 of this section for all ranges you use for testing. We also recommend that you keep any documentation you receive from instrument manufacturers showing that your instruments meet the specifications in Table 1 of this section.

* * * * *

■ 220. Section 1065.225 is amended by revising paragraph (a) to read as follows:

§ 1065.225 Intake-air flow meter.

(a) *Application.* You may use an intake-air flow meter in combination with a chemical balance of fuel, inlet air, and exhaust to calculate raw exhaust flow as described in § 1065.655(e) and (f), as follows:

(1) Use the actual value of calculated raw exhaust in the following cases:

(i) For multiplying raw exhaust flow rate with continuously sampled concentrations.

(ii) For multiplying total raw exhaust flow with batch-sampled concentrations.

(iii) For verifying minimum dilution ratio for PM batch sampling as described in § 1065.546.

(iv) For calculating the dilution air flow for background correction as described in § 1065.667.

(2) In the following cases, you may use an intake-air flow meter signal that does not give the actual value of raw exhaust, as long as it is linearly proportional to the exhaust flow rate's actual calculated value:

(i) For feedback control of a proportional sampling system, such as a partial-flow dilution system.

(ii) For multiplying with continuously sampled gas concentrations, if the same signal is used in a chemical-balance calculation to determine work from brake-specific fuel consumption and fuel consumed.

* * * * *

■ 221. Section 1065.230 is amended by revising paragraph (d) to read as follows:

§ 1065.230 Raw exhaust flow meter.

* * * * *

(d) *Exhaust cooling.* You may cool raw exhaust upstream of a raw-exhaust flow meter, as long as you observe all the following provisions:

(1) Do not sample PM downstream of the cooling.

(2) If cooling causes exhaust temperatures above 202 °C to decrease to below 180 °C, do not sample NMHC downstream of the cooling for compression-ignition engines, two-stroke spark-ignition engines, or four-stroke spark-ignition engines at or below 19 kW.

(3) The cooling must not cause aqueous condensation.

■ 222. Section 1065.240 is amended by revising paragraph (d) to read as follows:

§ 1065.240 Dilution air and diluted exhaust flow meters.

* * * * *

(d) *Exhaust cooling.* You may cool diluted exhaust upstream of a dilute-exhaust flow meter, as long as you observe all the following provisions:

(1) Do not sample PM downstream of the cooling.

(2) If cooling causes exhaust temperatures above 202 °C to decrease to below 180 °C, do not sample NMHC downstream of the cooling for compression-ignition engines, two-stroke spark-ignition engines, or four-stroke spark-ignition engines at or below 19 kW.

(3) The cooling must not cause aqueous condensationas described in § 1065.140(c)(6).

■ 223. Section 1065.250 is amended by revising paragraph (b) to read as follows:

§ 1065.250 Nondispersive infrared analyzer.

* * * * *

(b) *Component requirements.* We recommend that you use an NDIR analyzer that meets the specifications in Table 1 of § 1065.205. Note that your NDIR-based system must meet the calibration and verifications in §§ 1065.350 and 1065.355 and it must also meet the linearity verification in § 1065.307.

■ 224. Section 1065.260 is amended by revising paragraphs (b), (c), (e) and (f) to read as follows:

§ 1065.260 Flame-ionization detector.

* * * * *

(b) *Component requirements.* We recommend that you use a FID analyzer that meets the specifications in Table 1 of § 1065.205. Note that your FID-based system for measuring THC, THCE, or CH_4 must meet all the verifications for hydrocarbon measurement in subpart D of this part, and it must also meet the linearity verification in § 1065.307.

(c) *Heated FID analyzers.* For measuring THC or THCE from compression-ignition engines, two-stroke spark-ignition engines, and four-stroke spark-ignition engines at or below 19 kW, you must use heated FID analyzers that maintain all surfaces that are exposed to emissions at a temperature of (191 ±11) °C.

* * * * *

(e) *NMHC and NMOG.* For demonstrating compliance with NMHC standards, you may either measure THC and CH_4 and determine NMHC as

described in § 1065.660(b)(2) or (3), or you may measure THC and determine NMHC mass as described in § 1065.660(b)(1). See 40 CFR 1066.665 for methods to demonstrate compliance with NMOG standards for vehicle testing.

(f) *CH_4*. For reporting CH_4 or for demonstrating compliance with CH_4 standards, you may use a FID analyzer with a nonmethane cutter as described in § 1065.265 or you may use a GC–FID as described in § 1065.267. Determine CH_4 as described in § 1065.660(c).

■ 225. Section 1065.267 is amended by revising paragraph (b) to read as follows:

§ 1065.267 Gas chromatograph with a flame ionization detector.

* * * * *

(b) *Component requirements.* We recommend that you use a GC–FID that meets the specifications in Table 1 of § 1065.205 and that the measurement be done according to SAE J1151 (incorporated by reference in § 1065.1010). The GC–FID must meet the linearity verification in § 1065.307.

■ 226. A new § 1065.269 is added to subpart C to read as follows:

§ 1065.269 Photoacoustic analyzer for methanol and ethanol.

(a) *Application.* You may use a photoacoustic analyzer to measure ethanol and/or methanol concentrations in diluted exhaust for batch sampling.

(b) *Component requirements.* We recommend that you use a photoacoustic analyzer that meets the specifications in Table 1 of § 1065.205. Note that your photoacoustic system must meet the calibration and verifications in § 1065.369 and it must also meet the linearity verification in § 1065.307. Use an optical wheel configuration that gives analytical priority to measurement of the least stable components in the sample. Select a sample integration time of at least 5 seconds. Take into account sample chamber and sample line volumes when determining flush times for your instrument.

■ 227. Section 1065.270 is amended by revising paragraph (b) to read as follows:

§ 1065.270 Chemiluminescent detector.

* * * * *

(b) *Component requirements.* We recommend that you use a CLD that meets the specifications in Table 1 of § 1065.205. Note that your CLD-based system must meet the quench verification in § 1065.370 and it must also meet the linearity verification in § 1065.307. You may use a heated or unheated CLD, and you may use a CLD that operates at atmospheric pressure or under a vacuum.

* * * * *

■ 228. Section 1065.272 is amended by revising paragraph (b) to read as follows:

§ 1065.272 Nondispersive ultraviolet analyzer.

* * * * *

(b) *Component requirements.* We recommend that you use an NDUV analyzer that meets the specifications in Table 1 of § 1065.205. Note that your NDUV-based system must meet the verifications in § 1065.372 and it must also meet the linearity verification in § 1065.307.

* * * * *

■ 229. Section 1065.275 is amended by revising paragraph (b) to read as follows:

§ 1065.275 N_2O measurement devices.

* * * * *

(b) *Instrument types.* You may use any of the following analyzers to measure N_2O:

(1) Nondispersive infrared (NDIR) analyzer.

(2) Fourier transform infrared (FTIR) analyzer. Use appropriate analytical procedures for interpretation of infrared spectra. For example, EPA Test Method 320 is considered a valid method for spectral interpretation (see *http://www.epa.gov/ttn/emc/methods/method320.html*).

(3) Laser infrared analyzer. Examples of laser infrared analyzers are pulsed-mode high-resolution narrow band mid-infrared analyzers, and modulated continuous wave high-resolution narrow band mid-infrared analyzers.

(4) Photoacoustic analyzer. Use an optical wheel configuration that gives analytical priority to measurement of the least stable components in the sample. Select a sample integration time of at least 5 seconds. Take into account sample chamber and sample line volumes when determining flush times for your instrument.

(5) Gas chromatograph analyzer. You may use a gas chromatograph with an electron-capture detector (GC–ECD) to measure N_2O concentrations of diluted exhaust for batch sampling.

(i) You may use a packed or porous layer open tubular (PLOT) column phase of suitable polarity and length to achieve adequate resolution of the N_2O peak for analysis. Examples of acceptable columns are a PLOT column consisting of bonded polystyrene-divinylbenzene or a Porapack Q packed column. Take the column temperature profile and carrier gas selection into consideration when setting up your method to achieve adequate N_2O peak resolution.

(ii) Use good engineering judgment to zero your instrument and correct for drift. You do not need to follow the specific procedures in §§ 1065.530 and 1065.550(b) that would otherwise apply. For example, you may perform a span gas measurement before and after sample analysis without zeroing and use the average area counts of the pre-span and post-span measurements to generate a response factor (area counts/span gas concentration), which you then multiply by the area counts from your sample to generate the sample concentration.

* * * * *

■ 230. Section 1065.280 is amended by revising paragraph (b) to read as follows:

§ 1065.280 Paramagnetic and magnetopneumatic O_2 detection analyzers.

* * * * *

(b) *Component requirements.* We recommend that you use a PMD or MPD analyzer that meets the specifications in Table 1 of § 1065.205. Note that it must meet the linearity verification in § 1065.307.

■ 231. Section 1065.284 is amended by revising paragraph (b) to read as follows:

§ 1065.284 Zirconia (ZrO_2) analyzer.

* * * * *

(b) *Component requirements.* We recommend that you use a ZrO_2 analyzer that meets the specifications in Table 1 of § 1065.205. Note that your ZrO_2-based system must meet the linearity verification in § 1065.307.

■ 232. Section 1065.295 is amended by revising paragraph (b) to read as follows:

§ 1065.295 PM inertial balance for field-testing analysis.

* * * * *

(b) *Component requirements.* We recommend that you use a balance that meets the specifications in Table 1 of § 1065.205. Note that your balance-based system must meet the linearity verification in § 1065.307. If the balance uses an internal calibration process for routine spanning and linearity verifications, the process must be NIST-traceable.

* * * * *

Subpart D—[Amended]

■ 233. Section 1065.303 is revised to read as follows:

§ 1065.303 Summary of required calibration and verifications.

The following table summarizes the required and recommended calibrations and verifications described in this subpart and indicates when these have to be performed:

TABLE 1 OF § 1065.303—SUMMARY OF REQUIRED CALIBRATION AND VERIFICATIONS

Type of calibration or verification	Minimum frequency [1]
§ 1065.305: Accuracy, repeatability and noise	Accuracy: Not required, but recommended for initial installation. Repeatability: Not required, but recommended for initial installation. Noise: Not required, but recommended for initial installation.
§ 1065.307: Linearity verification	Speed: Upon initial installation, within 370 days before testing and after major maintenance. Torque: Upon initial installation, within 370 days before testing and after major maintenance. Electrical power, current, and voltage: Upon initial installation, within 370 days before testing and after major maintenance.[2] Fuel flow rate: Upon initial installation, within 370 days before testing, and after major maintenance. Intake-air, dilution air, diluted exhaust, and batch sampler flow rates: Upon initial installation, within 370 days before testing and after major maintenance, unless flow is verified by propane check or by carbon or oxygen balance. Raw exhaust flow rate: Upon initial installation, within 185 days before testing and after major maintenance, unless flow is verified by propane check or by carbon or oxygen balance. Gas dividers: Upon initial installation, within 370 days before testing, and after major maintenance. Gas analyzers (unless otherwise noted): Upon initial installation, within 35 days before testing and after major maintenance. FTIR and photoacoustic analyzers: Upon initial installation, within 370 days before testing and after major maintenance. GC–ECD: Upon initial installation and after major maintenance. PM balance: Upon initial installation, within 370 days before testing and after major maintenance. Pressure, temperature, and dewpoint: Upon initial installation, within 370 days before testing and after major maintenance.
§ 1065.308: Continuous gas analyzer system response and updating-recording verification—for gas analyzers not continuously compensated for other gas species.	Upon initial installation or after system modification that would affect response.
§ 1065.309: Continuous gas analyzer system-response and updating-recording verification—for gas analyzers continuously compensated for other gas species.	Upon initial installation or after system modification that would affect response.
§ 1065.310: Torque	Upon initial installation and after major maintenance.
§ 1065.315: Pressure, temperature, dewpoint	Upon initial installation and after major maintenance.
§ 1065.320: Fuel flow	Upon initial installation and after major maintenance.
§ 1065.325: Intake flow	Upon initial installation and after major maintenance.
§ 1065.330: Exhaust flow	Upon initial installation and after major maintenance.
§ 1065.340: Diluted exhaust flow (CVS)	Upon initial installation and after major maintenance.
§ 1065.341: CVS and batch sampler verification [3].	Upon initial installation, within 35 days before testing, and after major maintenance.
§ 1065.342 Sample dryer verification	For thermal chillers: upon installation and after major maintenance. For osmotic membranes; upon installation, within 35 days of testing, and after major maintenance.
§ 1065.345: Vacuum leak	For laboratory testing: upon initial installation of the sampling system, within 8 hours before the start of the first test interval of each duty-cycle sequence, and after maintenance such as pre-filter changes. For field testing: after each installation of the sampling system on the vehicle, prior to the start of the field test, and after maintenance such as pre-filter changes.
§ 1065.350: CO_2 NDIR H_2O interference	Upon initial installation and after major maintenance.
§ 1065.355: CO NDIR CO_2 and H_2O interference.	Upon initial installation and after major maintenance.
§ 1065.360: FID calibration, THC FID optimization, and THC FID verification.	Calibrate all FID analyzers: upon initial installation and after major maintenance. Optimize and determine CH_4 response for THC FID analyzers: upon initial installation and after major maintenance. Verify CH_4 response for THC FID analyzers: upon initial installation, within 185 days before testing, and after major maintenance.
§ 1065.362: Raw exhaust FID O_2 interference	For all FID analyzers: upon initial installation, and after major maintenance. For THC FID analyzers: upon initial installation, after major maintenance, and after FID optimization according to § 1065.360.
§ 1065.365: Nonmethane cutter penetration	Upon initial installation, within 185 days before testing, and after major maintenance.
§ 1065.369: H_2O, CO, and CO_2 interference verification for ethanol photoacoustic analyzers.	Upon initial installation and after major maintenance.
§ 1065.370: CLD CO_2 and H_2O quench	Upon initial installation and after major maintenance.
§ 1065.372: NDUV HC and H_2O interference	Upon initial installation and after major maintenance.
§ 1065.375: N_2O analyzer interference	Upon initial installation and after major maintenance.
§ 1065.376: Chiller NO_2 penetration	Upon initial installation and after major maintenance.
§ 1065.378: NO_2-to-NO converter conversion	Upon initial installation, within 35 days before testing, and after major maintenance.
§ 1065.390: PM balance and weighing	Independent verification: upon initial installation, within 370 days before testing, and after major maintenance.

TABLE 1 OF § 1065.303—SUMMARY OF REQUIRED CALIBRATION AND VERIFICATIONS—Continued

Type of calibration or verification	Minimum frequency [1]
§ 1065.395: Inertial PM balance and weighing ...	Zero, span, and reference sample verifications: within 12 hours of weighing, and after major maintenance. Independent verification: upon initial installation, within 370 days before testing, and after major maintenance. Other verifications: upon initial installation and after major maintenance.

[1] Perform calibrations and verifications more frequently than we specify, according to measurement system manufacturer instructions and good engineering judgment.
[2] Perform linearity verification either for electrical power or for current and voltage.
[3] The CVS verification described in § 1065.341 is not required for systems that agree within ±2% based on a chemical balance of carbon or oxygen of the intake air, fuel, and diluted exhaust.

■ 234. Section 1065.305 is amended by revising paragraph (d)(10)(i) to read as follows:

§ 1065.305 Verifications for accuracy, repeatability, and noise.

* * * * *

(d) * * *

(10) * * *

(i) Your measurement systems meet all the other required calibration, verification, and validation specifications that apply as specified in the regulations.

* * * * *

■ 235. Section 1065.307 is revised to read as follows:

§ 1065.307 Linearity verification.

(a) *Scope and frequency.* Perform linearity verification on each measurement system listed in Table 1 of this section at least as frequently as indicated in Table 1 of § 1065.303, consistent with measurement system manufacturer's recommendations and good engineering judgment. The intent of linearity verification is to determine that a measurement system responds accurately and proportionally over the measurement range of interest. Linearity verification generally consists of introducing a series of at least 10 reference values to a measurement system. The measurement system quantifies each reference value. The measured values are then collectively compared to the reference values by using a least-squares linear regression and the linearity criteria specified in Table 1 of this section.

(b) *Performance requirements.* If a measurement system does not meet the applicable linearity criteria referenced in Table 1 of this section, correct the deficiency by re-calibrating, servicing, or replacing components as needed. Repeat the linearity verification after correcting the deficiency to ensure that the measurement system meets the linearity criteria. Before you may use a measurement system that does not meet linearity criteria, you must demonstrate to us that the deficiency does not adversely affect your ability to demonstrate compliance with the applicable standards.

(c) *Procedure.* Use the following linearity verification protocol, or use good engineering judgment to develop a different protocol that satisfies the intent of this section, as described in paragraph (a) of this section:

(1) In this paragraph (c), the letter ''y'' denotes a generic measured quantity, the superscript over-bar denotes an arithmetic mean (such as), and the subscript ''$_{ref}$'' denotes the known or reference quantity being measured.

(2) Use good engineering judgment to operate a measurement system at normal operating conditions. This may include any specified adjustment or periodic calibration of the measurement system.

(3) If applicable, zero the instrument as you would before an emission test by introducing a zero signal. Depending on the instrument, this may be a zero-concentration gas, a reference signal, a set of reference thermodynamic conditions, or some combination of these. For gas analyzers, use a zero gas that meets the specifications of § 1065.750 and introduce it directly at the analyzer port.

(4) If applicable, span the instrument as you would before an emission test by introducing a span signal. Depending on the instrument, this may be a span-concentration gas, a reference signal, a set of reference thermodynamic conditions, or some combination of these. For gas analyzers, use a span gas that meets the specifications of § 1065.750 and introduce it directly at the analyzer port.

(5) If applicable, after spanning the instrument, check zero with the same signal you used in paragraph (c)(3) of this section. Based on the zero reading, use good engineering judgment to determine whether or not to rezero and or re-span the instrument before continuing.

(6) For all measured quantities, use the instrument manufacturer's recommendations and good engineering judgment to select reference values, y_{refi}, that cover a range of values that you expect would prevent extrapolation beyond these values during emission testing. We recommend selecting a zero reference signal as one of the reference values for the linearity verification. For pressure, temperature, dewpoint, power, current, voltage, photoacoustic analyzers, and GC–ECD linearity verifications, we recommend at least three reference values. For all other linearity verifications select at least ten reference values.

(7) Use the instrument manufacturer's recommendations and good engineering judgment to select the order in which you will introduce the series of reference values. For example, you may select the reference values randomly to avoid correlation with previous measurements and to avoid hysteresis; you may select reference values in ascending or descending order to avoid long settling times of reference signals; or you may select values to ascend and then descend to incorporate the effects of any instrument hysteresis into the linearity verification.

(8) Generate reference quantities as described in paragraph (d) of this section. For gas analyzers, use gas concentrations known to be within the specifications of § 1065.750 and introduce them directly at the analyzer port.

(9) Introduce a reference signal to the measurement instrument.

(10) Allow time for the instrument to stabilize while it measures the value at the reference condition. Stabilization time may include time to purge an instrument and time to account for its response.

(11) At a recording frequency of at least f Hz, specified in Table 1 of § 1065.205, measure the value at the reference condition for 30 seconds (you may select a longer sampling period if the recording update frequency is less than 0.5 Hz) and record the arithmetic mean of the recorded values, $\bar{y}_{i,}$. Refer to § 1065.602 for an example of calculating an arithmetic mean.

(12) Repeat the steps in paragraphs (c)(9) though (11) of this section until measurements are complete at each of the reference conditions.

(13) Use the arithmetic means, $\bar{y}_{i,}$, and reference values, $\bar{y}_{refi,}$ to calculate least-squares linear regression parameters and statistical values to compare to the minimum performance criteria specified in Table 1 of this section. Use the calculations described in § 1065.602. Using good engineering judgment, you may weight the results of individual data pairs (i.e. ($y_{refi,}$ $\bar{y}_{i,}$)), in the linear regression calculations.

(d) *Reference signals.* This paragraph (d) describes recommended methods for generating reference values for the linearity-verification protocol in paragraph (c) of this section. Use reference values that simulate actual values, or introduce an actual value and measure it with a reference-measurement system. In the latter case, the reference value is the value reported by the reference-measurement system. Reference values and reference-measurement systems must be NIST-traceable. We recommend using calibration reference quantities that are NIST-traceable within 0.5% uncertainty, if not specified elsewhere in this part 1065. Use the following recommended methods to generate reference values or use good engineering judgment to select a different reference:

(1) *Speed.* Run the engine or dynamometer at a series of steady-state speeds and use a strobe, photo tachometer, or laser tachometer to record reference speeds.

(2) *Torque.* Use a series of calibration weights and a calibration lever arm to simulate engine torque. You may instead use the engine or dynamometer itself to generate a nominal torque that is measured by a reference load cell or proving ring in series with the torque-measurement system. In this case, use the reference load cell measurement as the reference value. Refer to § 1065.310 for a torque-calibration procedure similar to the linearity verification in this section.

(3) *Electrical power, current, and voltage.* You must perform linearity verification for either electrical power, or for current and voltage. Perform linearity verifications using a reference meter and controlled sources of current and voltage. We recommend using a complete calibration system that is suitable for the electrical power distribution industry.

(4) *Fuel rate.* Operate the engine at a series of constant fuel-flow rates or re-circulate fuel back to a tank through the fuel flow meter at different flow rates. Use a gravimetric reference measurement (such as a scale, balance, or mass comparator) at the inlet to the fuel-measurement system. Use a stopwatch or timer to measure the time intervals over which reference masses of fuel are introduced to the fuel measurement system. The reference fuel mass divided by the time interval is the reference fuel flow rate.

(5) *Flow rates—inlet air, dilution air, diluted exhaust, raw exhaust, or sample flow.* Use a reference flow meter with a blower or pump to simulate flow rates. Use a restrictor, diverter valve, a variable-speed blower or a variable-speed pump to control the range of flow rates. Use the reference meter's response as the reference values.

(i) *Reference flow meters.* Because the flow range requirements for these various flows are large, we allow a variety of reference meters. For example, for diluted exhaust flow for a full-flow dilution system, we recommend a reference subsonic venturi flow meter with a restrictor valve and a blower to simulate flow rates. For inlet air, dilution air, diluted exhaust for partial-flow dilution, raw exhaust, or sample flow, we allow reference meters such as critical flow orifices, critical flow venturis, laminar flow elements, master mass flow standards, or Roots meters. Make sure the reference meter is calibrated by the flow-meter manufacturer and its calibration is NIST-traceable. If you use the difference of two flow measurements to determine a net flow rate, you may use one of the measurements as a reference for the other.

(ii) *Reference flow values.* Because the reference flow is not absolutely constant, sample and record values of $\dot{n}_{refi,}$ for 30 seconds and use the arithmetic mean of the values, $\dot{n}_{ref,}$ as the reference value. Refer to § 1065.602 for an example of calculating arithmetic mean.

(6) *Gas division.* Use one of the two reference signals:

(i) At the outlet of the gas-division system, connect a gas analyzer that meets the linearity verification described in this section and has not been linearized with the gas divider being verified. For example, verify the linearity of an analyzer using a series of reference analytical gases directly from compressed gas cylinders that meet the specifications of § 1065.750. We recommend using a FID analyzer or a PMD or MPD O_2 analyzer because of their inherent linearity. Operate this analyzer consistent with how you would operate it during an emission test. Connect a span gas to the gas-divider inlet. Use the gas-division system to divide the span gas with purified air or nitrogen. Select gas divisions that you typically use. Use a selected gas division as the measured value. Use the analyzer response divided by the span gas concentration as the reference gas-division value. Because the instrument response is not absolutely constant, sample and record values of x_{refi} for 30 seconds and use the arithmetic mean of the values, $\bar{x}_{refi}$, as the reference value. Refer to § 1065.602 for an example of calculating arithmetic mean.

(ii) Using good engineering judgment and the gas divider manufacturer's recommendations, use one or more reference flow meters to measure the flow rates of the gas divider and verify the gas-division value.

(7) *Continuous constituent concentration.* For reference values, use a series of gas cylinders of known gas concentration or use a gas-division system that is known to be linear with a span gas. Gas cylinders, gas-division systems, and span gases that you use for reference values must meet the specifications of § 1065.750.

(8) *Temperature.* You may perform the linearity verification for temperature measurement systems with thermocouples, RTDs, and thermistors by removing the sensor from the system and using a simulator in its place. Use a NIST-traceable simulator that is independently calibrated and, as appropriate, cold-junction-compensated. The simulator uncertainty scaled to absolute temperature must be less than 0.5% of $T_{max.}$ If you use this option, you must use sensors that the supplier states are accurate to better than 0.5% of T_{max} compared with their standard calibration curve.

(9) *Mass.* For linearity verification for gravimetric PM balances, use external calibration weights that that meet the requirements in § 1065.790.

(e) *Measurement systems that require linearity verification.* Table 1 of this section indicates measurement systems that require linearity verification, subject to the following provisions:

(1) Perform linearity verification more frequently based on the instrument manufacturer's recommendation or good engineering judgment.

(2) The expression "x_{min}" refers to the reference value used during linearity verification that is closest to zero. This is the value used to calculate the first tolerance in Table 1 of this section using the intercept, $a_{0.}$ Note that this value may be zero, positive, or negative depending on the reference values. For example, if the reference values chosen to validate a pressure transducer vary from −10 to −1 kPa, x_{min} is −1 kPa. If the reference values used to validate a

temperature device vary from 290 to 390 K, x_{min} is 290 K.

(3) The expression ''max'' generally refers to the absolute value of the reference value used during linearity verification that is furthest from zero. This is the value used to scale the first and third tolerances in Table 1 of this section using a_0 and *SEE*. For example, if the reference values chosen to validate a pressure transducer vary from −10 to −1 kPa, then p_{max} is +10 kPa. If the reference values used to validate a temperature device vary from 290 to 390 K, then T_{max} is 390 K. For gas dividers where ''max'' is expressed as, $x_{max}/x_{span} \geq$; x_{max} is the maximum gas concentration used during the verification, x_{span} is the undivided, undiluted, span gas concentration, and the resulting ratio is the maximum divider point reference value used during the verification (typically 1). The following are special cases where ''max'' refers to a different value:

(i) For linearity verification with a PM balance, m_{max} refers to the typical mass of a PM filter.

(ii) For linearity verification of torque on the engine's primary output shaft, T_{max} refers to the manufacturer's specified engine torque peak value of the lowest torque engine to be tested.

(4) The specified ranges are inclusive. For example, a specified range of 0.98–1.02 for a_1 means $0.98 \leq a_1 \leq 1.02$.

(5) Linearity verification is optional for systems that pass the flow-rate verification for diluted exhaust as described in § 1065.341 (the propane check) or for systems that agree within ±2% based on a chemical balance of carbon or oxygen of the intake air, fuel, and exhaust.

(6) You must meet the a_1 criteria for these quantities only if the absolute value of the quantity is required, as opposed to a signal that is only linearly proportional to the actual value.

(7) Linearity verification is required for the following temperature measurements:

(i) The following temperature measurements always require linearity verification:

(A) Air intake.

(B) Aftertreatment bed(s), for engines tested with aftertreatment devices subject to cold-start testing.

(C) Dilution air for PM sampling, including CVS, double-dilution, and partial-flow systems.

(D) PM sample.

(E) Chiller sample, for gaseous sampling systems that use thermal chillers to dry samples and use chiller temperature to calculate the dewpoint at the outlet of the chiller. For your testing, if you choose to use a high alarm temperature setpoint for the chiller temperature as a constant value in determining the amount of water removed from the emission sample, you may use good engineering judgment to verify the accuracy of the high alarm temperature setpoint instead of linearity verification on the chiller temperature. To verify that the alarm trip point value is no less than 2.0 °C below the reference value at the trip point, we recommend that you input a reference simulated temperature signal below the alarm trip point and increase this signal until the high alarm trips.

(ii) Linearity verification is required for the following temperature measurements if these temperature measurements are specified by the engine manufacturer:

(A) Fuel inlet.

(B) Air outlet to the test cell's charge air cooler air outlet, for engines tested with a laboratory heat exchanger that simulates an installed charge air cooler.

(C) Coolant inlet to the test cell's charge air cooler, for engines tested with a laboratory heat exchanger that simulates an installed charge air cooler.

(D) Oil in the sump/pan.

(E) Coolant before the thermostat, for liquid-cooled engines.

(8) Linearity verification is required for the following pressure measurements:

(i) The following pressure measurements always require linearity verification:

(A) Air intake restriction.

(B) Exhaust back pressure.

(C) Barometer.

(D) CVS inlet gage pressure.

(E) Sample dryer, for gaseous sampling systems that use either osmotic-membrane or thermal chillers to dry samples. For your testing, if you choose to use a low alarm pressure setpoint for the sample dryer pressure as a constant value in determining the amount of water removed from the emission sample, you may use good engineering judgment to verify the accuracy of the low alarm pressure setpoint instead of linearity verification on the sample dryer pressure. To verify that the trip point value is no more than 4.0 kPa above the reference value at the trip point, we recommend that you input a reference pressure signal above the alarm trip point and decrease this signal until the low alarm trips.

(ii) Linearity verification is required for the following pressure measurements if these pressure measurements are specified by the engine manufacturer:

(A) The test cell's charge air cooler and interconnecting pipe pressure drop, for turbo-charged engines tested with a laboratory heat exchanger that simulates an installed charge air cooler.

(B) Fuel outlet.

TABLE 1 OF § 1065.307—MEASUREMENT SYSTEMS THAT REQUIRE LINEARITY VERIFICATION

Measurement system	Quantity	Linearity criteria			
		$\chi_{min}(a_1-1)+a_0$	a_1	*SEE*	r^2
Speed	f_n	≤0.05% · f_{nmax}	0.98–1.02	≤2% · f_{nmax}	≥0.990
Torque	T	≤1% · T_{max}	0.98–1.02	≤2% · T_{max}	≥0.990
Electrical power	P	≤1% · P_{max}	0.98–1.02	≤2% · P_{max}	≥0.990
Current	I	≤1% · I_{max}	0.98–1.02	≤2% · I_{max}	≥0.990
Voltage	U	≤1% · U_{max}	0.98–1.02	≤2% · U_{max}	≥0.990
Fuel flow rate	$\dot{m}$	≤1% · $\dot{m}_{max}$	0.98–1.02	≤2% · $\dot{m}_{max}$	≥0.990
Intake-air flow rate[1]	$\dot{n}$	≤1% · $\dot{n}_{max}$	0.98–1.02	≤2% · $\dot{n}_{max}$	≥0.990
Dilution air flow rate[1]	$\dot{n}$	≤1% · $\dot{n}_{max}$	0.98–1.02	≤2% · $\dot{n}_{max}$	≥0.990
Diluted exhaust flow rate[1]	$\dot{n}$	≤1% · $\dot{n}_{max}$	0.98–1.02	≤2% · $\dot{n}_{max}$	≥0.990
Raw exhaust flow rate[1]	$\dot{n}$	≤1% · $\dot{n}_{max}$	0.98–1.02	≤2% · $\dot{n}_{max}$	≥0.990
Batch sampler flow rates[1]	$\dot{n}$	≤1% · $\dot{n}_{max}$	0.98–1.02	≤2% · $\dot{n}_{max}$	≥0.990
Gas dividers	χ/χ_{span}	≤0.5% · $\chi_{max/xspan}$	0.98–1.02	≤2% · $\chi_{max/xspan}$	≥0.990
Gas analyzers for laboratory testing.	χ	≤0.5% · χ_{max}	0.99–1.01	≤1% · χ_{max}	≥0.998
Gas analyzers for field testing	χ	≤1% · χ_{max}	0.99–1.01	≤1% · χ_{max}	≥0.998
PM balance	m	≤1% · m_{max}	0.99–1.01	≤1% · m_{max}	≥0.998

TABLE 1 OF § 1065.307—MEASUREMENT SYSTEMS THAT REQUIRE LINEARITY VERIFICATION—Continued

Pressures	p	$\leq 1\% \cdot p_{max}$	0.99–1.01	$\leq 1\% \cdot p_{max}$	≥0.998
Dewpoint for intake air, PM-stabilization and balance environments.	T_{dew}	$\leq 0.5\% \cdot T_{dewmax}$	0.99–1.01	$\leq 0.5\% \cdot T_{dewmax}$ -	≥0.998
Other dewpoint measurements	T_{dew}	$\leq 1\% \cdot T_{dewmax}$	0.99–1.01	$\leq 1\% \cdot T_{dewmax}$ -	≥0.998
Analog-to-digital conversion of temperature signals.	T	$\leq 1\% \cdot T_{max}$	0.99–1.01	$\leq 1\% \cdot T_{max}$	≥0.998

[1] For flow meters that determine volumetric flow rate, $\dot{V}_{std}$, you may substitute $\dot{V}_{std}$ for $\dot{n}$ as the quantity and substitute $\dot{V}_{stdmax}$ for $\dot{n}_{max}$.

■ 236. Section 1065.308 is amended by revising paragraph (d) and adding paragraph (g) to read as follows:

§ 1065.308 Continuous gas analyzer system-response and updating-recording verification—for gas analyzers not continuously compensated for other gas species.

* * * * *

(d) *Procedure.* Use the following procedure to verify the response of each continuous gas analyzer:

(1) *Instrument setup.* Follow the analyzer manufacturer's start-up and operating instructions. Adjust the measurement system as needed to optimize performance. Run this verification with the analyzer operating in the same manner you will use for emission testing. If the analyzer shares its sampling system with other analyzers, and if gas flow to the other analyzers will affect the system response time, then start up and operate the other analyzers while running this verification test. You may run this verification test on multiple analyzers sharing the same sampling system at the same time. If you use any analog or real-time digital filters during emission testing, you must operate those filters in the same manner during this verification.

(2) *Equipment setup.* We recommend using minimal lengths of gas transfer lines between all connections and fast-acting three-way valves (2 inlets, 1 outlet) to control the flow of zero and blended span gases to the sample system's probe inlet or a tee near the outlet of the probe. If you inject the gas at a tee near the outlet of the probe, you may correct the transformation time, $t_{50,}$ for an estimate of the transport time from the probe inlet to the tee. Normally the gas flow rate is higher than the sample flow rate and the excess is overflowed out the inlet of the probe. If the gas flow rate is lower than the sample flow rate, the gas concentrations must be adjusted to account for the dilution from ambient air drawn into the probe. We recommend you use the final, stabilized analyzer reading as the final gas concentration. Select span gases for the species being measured. You may use binary or multi-gas span gases. You may use a gas blending or mixing device to blend span gases. A gas blending or mixing device is recommended when blending span gases diluted in N_2 with span gases diluted in air. You may use a multi-gas span gas, such as NO-CO-CO_2-C_3H_8-CH_4, to verify multiple analyzers at the same time. If you use standard binary span gases, you must run separate response tests for each analyzer. In designing your experimental setup, avoid pressure pulsations due to stopping the flow through the gas-blending device. The change in gas concentration must be at least 20% of the analyzer's range.

(3) *Data collection.* (i) Start the flow of zero gas.

(ii) Allow for stabilization, accounting for transport delays and the slowest analyzer's full response.

(iii) Start recording data. For this verification you must record data at a frequency greater than or equal to that of the updating-recording frequency used during emission testing. You may not use interpolation or filtering to alter the recorded values.

(iv) Switch the flow to allow the blended span gases to flow to the analyzer. If you intend to use the data from this test to determine t_{50} for time alignment, record this time as $t_{0.}$

(v) Allow for transport delays and the slowest analyzer's full response.

(vi) Switch the flow to allow zero gas to flow to the analyzer. If you intend to use the data from this test to determine t_{50} for time alignment, record this time as $t_{100.}$

(vii) Allow for transport delays and the slowest analyzer's full response.

(viii) Repeat the steps in paragraphs (d)(3)(iv) through (vii) of this section to record seven full cycles, ending with zero gas flowing to the analyzers.

(ix) Stop recording.

* * * * *

(g) *Optional procedure.* Instead of using a three-way valve to switch between zero and span gases, you may use a fast-acting two-way valve to switch sampling between ambient air and span gas at the probe inlet. For this alternate procedure, the following provisions apply:

(1) If your probe is sampling from a continuously flowing gas stream (such as a CVS tunnel), you may adjust the span gas flow rate to be different than the sample flow rate.

(2) If your probe is sampling from a gas stream that is not continuously flowing (such as a raw exhaust stack), you must adjust the span gas flow rate to be less than the sample flow rate so ambient air is always drawn into the probe inlet. This avoids errors associated with overflowing span gas out of the probe inlet and drawing the span gas back in when sampling ambient air.

(3) When sampling ambient air with or without span gas, all the analyzer readings must be stable within ±0.5% of the target gas concentration step size. If any analyzer reading is outside the specified range, you must resolve the problem and verify that all the analyzer readings meet this specification.

(4) For oxygen analyzers, you may use purified N_2 as the zero gas and ambient air (plus purified N_2 if needed) as the reference gas. Perform the verification with seven repeat measurements that each consist of stabilizing with purified N_2, switching to ambient air and observing the analyzer's response rise and stabilized reading, followed by switching back to purified N_2 and observing the analyzer's response fall and stabilized reading.

■ 237. Section 1065.309 is amended by revising paragraphs (a) and (d)(2) and adding paragraphs (g) and (h) to read as follows:

§ 1065.309 Continuous gas analyzer system-response and updating-recording verification—for gas analyzers continuously compensated for other gas species.

(a) *Scope and frequency.* This section describes a verification procedure for system response and updating-recording frequency for continuous gas analyzers that output a single gas species mole fraction (i.e., concentration) based on a continuous combination of multiple gas species measured with multiple

detectors (i.e., gas analyzers continuously compensated for other gas species). See § 1065.308 for verification procedures that apply to continuous gas analyzers that are not continuously compensated for other gas species or that use only one detector for gaseous species. Perform this verification to determine the system response of the continuous gas analyzer and its sampling system. This verification is required for continuous gas analyzers used for transient or ramped-modal testing. You need not perform this verification for batch gas analyzers or for continuous gas analyzers that are used only for discrete-mode testing. For this check we consider water vapor a gaseous constituent. This verification does not apply to any processing of individual analyzer signals that are time-aligned to their t_{50} times and were verified according to § 1065.308. For example, this verification does not apply to correction for water removed from the sample done in post-processing according to § 1065.659 (40 CFR 1066.640 for vehicle testing) and it does not apply to NMHC determination from THC and CH_4 according to § 1065.660. Perform this verification after initial installation (i.e., test cell commissioning) and after any modifications to the system that would change the system response.

* * * * *

(d) * * *

(2) *Equipment setup.* We recommend using minimal lengths of gas transfer lines between all connections and fast-acting three-way valves (2 inlets, 1 outlet) to control the flow of zero and blended span gases to the sample system's probe inlet or a tee near the outlet of the probe. If you inject the gas at a tee near the outlet of the probe, you may correct the transformation time, t_{50}, for an estimate of the transport time from the probe inlet to the tee. Normally the gas flow rate is higher than the sample flow rate and the excess is overflowed out the inlet of the probe. If the gas flow rate is lower than the sample flow rate, the gas concentrations must be adjusted to account for the dilution from ambient air drawn into the probe. We recommend you use the final, stabilized analyzer reading as the final gas concentration. Select span gases for the species being continuously combined, other than H_2O. Select concentrations of compensating species that will yield concentrations of these species at the analyzer inlet that covers the range of concentrations expected during testing. You may use binary or multi-gas span gases. You may use a gas blending or mixing device to blend span gases. A gas blending or mixing device is recommended when blending span gases diluted in N_2 with span gases diluted in air. You may use a multi-gas span gas, such as NO-CO-CO_2-C_3H_8-CH_4, to verify multiple analyzers at the same time. In designing your experimental setup, avoid pressure pulsations due to stopping the flow through the gas blending device. The change in gas concentration must be at least 20% of the analyzer's range. If H_2O correction is applicable, then span gases must be humidified before entering the analyzer; however, you may not humidify NO_2 span gas by passing it through a sealed humidification vessel that contains water. You must humidify NO_2 span gas with another moist gas stream. We recommend humidifying your NO-CO-CO_2-C_3H_8-CH_4, balance N_2 blended gas by flowing the gas mixture through a sealed vessel that humidifies the gas by bubbling it through distilled water and then mixing the gas with dry NO_2 gas, balance purified air. If your system does not use a sample dryer to remove water from the sample gas, you must humidify your span gas to the highest sample H_2O content that you estimate during emission sampling. If your system uses a sample dryer during testing, it must pass the sample dryer verification check in § 1065.342, and you must humidify your span gas to an H_2O content greater than or equal to the level determined in § 1065.145(e)(2). If you are humidifying span gases without NO_2, use good engineering judgment to ensure that the wall temperatures in the transfer lines, fittings, and valves from the humidifying system to the probe are above the dewpoint required for the target H_2O content. If you are humidifying span gases with NO_2, use good engineering judgment to ensure that there is no condensation in the transfer lines, fittings, or valves from the point where humidified gas is mixed with NO_2 span gas to the probe. We recommend that you design your setup so that the wall temperatures in the transfer lines, fittings, and valves from the humidifying system to the probe are at least 5 °C above the local sample gas dewpoint. Operate the measurement and sample handling system as you do for emission testing. Make no modifications to the sample handling system to reduce the risk of condensation. Flow humidified gas through the sampling system before this check to allow stabilization of the measurement system's sampling handling system to occur, as it would for an emission test.

* * * * *

(g) *Optional procedure.* Follow the optional procedures in § 1065.308(g), noting that you may use compensating gases mixed with ambient air for oxygen analyzers.

(h) *Analyzers with H_2O compensation sampling downstream of a sample dryer.* You may omit humidifying the span gas as described in this paragraph (h). If an analyzer compensates only for H_2O, you may apply the requirements of § 1065.308 instead of the requirements of this section. You may omit humidifying the span gas if you meet the following conditions:

(1) The analyzer is located downstream of a sample dryer.

(2) The maximum value for H_2O mole fraction downstream of the dryer must be less than or equal to 0.010. Verify this during each sample dryer verification according to § 1065.342.

■ 238. Section 1065.310 is amended by revising paragraph (d) to read as follows:

§ 1065.310 Torque calibration.

* * * * *

(d) *Strain gage, load transducer, or proving ring calibration.* This technique applies force either by hanging weights on a lever arm (these weights and their lever arm length are not used as part of the reference torque determination) or by operating the dynamometer at different torques. Apply at least six force combinations for each applicable torque-measuring range, spacing the force quantities about equally over the range. Oscillate or rotate the dynamometer during calibration to reduce frictional static hysteresis. In this case, the reference torque is determined by multiplying the force output from the reference meter (such as a strain gage, load transducer, or proving ring) by its effective lever-arm length, which you measure from the point where the force measurement is made to the dynamometer's rotational axis. Make sure you measure this length perpendicular to the reference meter's measurement axis and perpendicular to the dynamometer's rotational axis.

■ 239. Section 1065.315 is amended by revising paragraph (a)(2) to read as follows:

§ 1065.315 Pressure, temperature, and dewpoint calibration.

(a) * * *

(2) *Temperature.* We recommend digital dry-block or stirred-liquid temperature calibrators, with data logging capabilities to minimize transcription errors. We recommend using calibration reference quantities that are NIST-traceable within 0.5% uncertainty. You may perform linearity

verification for temperature measurement systems with thermocouples, RTDs, and thermistors by removing the sensor from the system and using a simulator in its place. Use a NIST-traceable simulator that is independently calibrated and, as appropriate, cold-junction compensated. The simulator uncertainty scaled to absolute temperature must be less than 0.5% of $T_{max.}$ If you use this option, you must use sensors that the supplier states are accurate to better than 0.5% of T_{max} compared with their standard calibration curve.

* * * * *

■ 240. Section 1065.341 is amended by revising the section heading and paragraphs (a) introductory text, (d) introductory text, and (f)(3) to read as follows:

§ 1065.341 CVS, PFD, and batch sampler verification (propane check).

(a) A propane check serves as a CVS verification to determine if there is a discrepancy in measured values of diluted exhaust flow. You may use the same procedure to verify PFDs and batch samplers. For purposes of PFD and batch sampler verification, read the term CVS to mean PFD or batch sampler as appropriate. A propane check also serves as a batch-sampler verification to determine if there is a discrepancy in a batch sampling system that extracts a sample from a CVS, as described in paragraph (g) of this section. Using good engineering judgment and safe practices, this check may be performed using a gas other than propane, such as CO_2 or CO. A failed propane check might indicate one or more problems that may require corrective action, as follows:

* * * * *

(d) If you performed the vacuum-side leak verification of the HC sampling system as described in paragraph (c)(8) of this section, you may use the HC contamination procedure in § 1065.520(f) to verify HC contamination. Otherwise, zero, span, and verify contamination of the HC sampling system, as follows:

* * * * *

(f) * * *

(3) Calculate total C_3H_8 mass based on your CVS and HC data as described in § 1065.650 (40 CFR 1066.610 for vehicle testing) and § 1065.660, using the molar mass of C_3H_8, $M_{C3H8,}$ instead the effective molar mass of HC, $M_{HC.}$

* * * * *

■ 241. Section 1065.350 is amended by revising paragraph (d) and adding paragraph (e) to read as follows:

§ 1065.350 H_2O interference verification for CO_2 NDIR analyzers.

* * * * *

(d) *Procedure.* Perform the interference verification as follows:

(1) Start, operate, zero, and span the CO_2 NDIR analyzer as you would before an emission test. If the sample is passed through a dryer during emission testing, you may run this verification test with the dryer if it meets the requirements of § 1065.342. Operate the dryer at the same conditions as you will for an emission test. You may also run this verification test without the sample dryer.

(2) Create a humidified test gas by bubbling zero gas that meets the specifications in § 1065.750 through distilled H_2O in a sealed vessel. If the sample is not passed through a dryer during emission testing, control the vessel temperature to generate an H_2O level at least as high as the maximum expected during emission testing. If the sample is passed through a dryer during emission testing, control the vessel temperature to generate an H_2O level at least as high as the level determined in § 1065.145(e)(2) for that dryer.

(3) Introduce the humidified test gas into the sample system. You may introduce it downstream of any sample dryer, if one is used during testing.

(4) If the sample is not passed through a dryer during this verification test, measure the H_2O mole fraction, $x_{H2O,}$ of the humidified test gas, as close as possible to the inlet of the analyzer. For example, measure dewpoint, $T_{dew,}$ and absolute pressure, $p_{total,}$ to calculate $x_{H2O.}$ Verify that the H_2O content meets the requirement in paragraph (d)(2) of this section. If the sample is passed through a dryer during this verification test, you must verify that the H_2O content of the humidified test gas downstream of the vessel meets the requirement in paragraph (d)(2) of this section based on either direct measurement of the H_2O content (e.g., dewpoint and pressure) or an estimate based on the vessel pressure and temperature. Use good engineering judgment to estimate the H_2O content. For example, you may use previous direct measurements of H_2O content to verify the vessel's level of saturation.

(5) If a sample dryer is not used in this verification test, use good engineering judgment to prevent condensation in the transfer lines, fittings, or valves from the point where x_{H2O} is measured to the analyzer. We recommend that you design your system so the wall temperatures in the transfer lines, fittings, and valves from the point where x_{H2O} is measured to the analyzer are at least 5 °C above the local sample gas dewpoint.

(6) Allow time for the analyzer response to stabilize. Stabilization time may include time to purge the transfer line and to account for analyzer response.

(7) While the analyzer measures the sample's concentration, record 30 seconds of sampled data. Calculate the arithmetic mean of this data. The analyzer meets the interference verification if this value is within (0.0 ±0.4) mmol/mol.

(e) *Exceptions.* The following exceptions apply:

(1) You may omit this verification if you can show by engineering analysis that for your CO_2 sampling system and your emission-calculation procedures, the H_2O interference for your CO_2 NDIR analyzer always affects your brake-specific emission results within ±0.5% of each of the applicable standards. This specification also applies for vehicle testing, except that it relates to emission results in g/mile or g/kilometer.

(2) You may use a CO_2 NDIR analyzer that you determine does not meet this verification, as long as you try to correct the problem and the measurement deficiency does not adversely affect your ability to show that engines comply with all applicable emission standards.

■ 242. Section 1065.355 is amended by revising paragraph (d) to read as follows:

§ 1065.355 H_2O and CO_2 interference verification for CO NDIR analyzers.

* * * * *

(d) *Procedure.* Perform the interference verification as follows:

(1) Start, operate, zero, and span the CO NDIR analyzer as you would before an emission test. If the sample is passed through a dryer during emission testing, you may run this verification test with the dryer if it meets the requirements of § 1065.342. Operate the dryer at the same conditions as you will for an emission test. You may also run this verification test without the sample dryer.

(2) Create a humidified CO_2 test gas by bubbling a CO_2 span gas that meets the specifications in § 1065.750 through distilled H_2O in a sealed vessel. If the sample is not passed through a dryer during emission testing, control the vessel temperature to generate an H_2O level at least as high as the maximum expected during emission testing. If the sample is passed through a dryer during emission testing, control the vessel temperature to generate an H_2O level at least as high as the level determined in § 1065.145(e)(2) for that dryer. Use a

CO_2 span gas concentration at least as high as the maximum expected during testing.

(3) Introduce the humidified CO_2 test gas into the sample system. You may introduce it downstream of any sample dryer, if one is used during testing.

(4) If the sample is not passed through a dryer during this verification test, measure the H_2O mole fraction, χ_{H2O}, of the humidified CO_2 test gas as close as possible to the inlet of the analyzer. For example, measure dewpoint, T_{dew}, and absolute pressure, p_{total}, to calculate x_{H2O}. Verify that the H_2O content meets the requirement in paragraph (d)(2) of this section. If the sample is passed through a dryer during this verification test, you must verify that the H_2O content of the humidified test gas downstream of the vessel meets the requirement in paragraph (d)(2) of this section based on either direct measurement of the H_2O content (e.g., dewpoint and pressure) or an estimate based on the vessel pressure and temperature. Use good engineering judgment to estimate the H_2O content. For example, you may use previous direct measurements of H_2O content to verify the vessel's level of saturation.

(5) If a sample dryer is not used in this verification test, use good engineering judgment to prevent condensation in the transfer lines, fittings, or valves from the point where x_{H2O} is measured to the analyzer. We recommend that you design your system so that the wall temperatures in the transfer lines, fittings, and valves from the point where x_{H2O} is measured to the analyzer are at least 5 °C above the local sample gas dewpoint.

(6) Allow time for the analyzer response to stabilize. Stabilization time may include time to purge the transfer line and to account for analyzer response.

(7) While the analyzer measures the sample's concentration, record its output for 30 seconds. Calculate the arithmetic mean of this data.

(8) The analyzer meets the interference verification if the result of paragraph (d)(7) of this section meets the tolerance in paragraph (c) of this section.

(9) You may also run interference procedures for CO_2 and H_2O separately. If the CO_2 and H_2O levels used are higher than the maximum levels expected during testing, you may scale down each observed interference value by multiplying the observed interference by the ratio of the maximum expected concentration value to the actual value used during this procedure. You may run separate interference concentrations of H_2O (down to 0.025 mol/mol H_2O content) that are lower than the maximum levels expected during testing, but you must scale up the observed H_2O interference by multiplying the observed interference by the ratio of the maximum expected H_2O concentration value to the actual value used during this procedure. The sum of the two scaled interference values must meet the tolerance in paragraph (c) of this section.

* * * * *

■ 243. Section 1065.360 is amended by revising paragraphs (a)(3), (b), (d), and (e) introductory text, and adding paragraph (e)(4), to read as follows:

§ 1065.360 FID optimization and verification.

(a) * * *

(3) Verify the CH_4 response within 185 days before testing as described in paragraph (e) of this section.

(b) *Calibration.* Use good engineering judgment to develop a calibration procedure, such as one based on the FID-analyzer manufacturer's instructions and recommended frequency for calibrating the FID. Alternately, you may remove system components for off-site calibration. For a FID that measures THC, calibrate using C_3H_8 calibration gases that meet the specifications of § 1065.750. For a FID that measures CH_4, calibrate using CH_4 calibration gases that meet the specifications of § 1065.750. We recommend FID analyzer zero and span gases that contain approximately the flow-weighted mean concentration of O_2 expected during testing. If you use a FID to measure CH_4 downstream of a nonmethane cutter, you may calibrate that FID using CH_4 calibration gases with the cutter. Regardless of the calibration gas composition, calibrate on a carbon number basis of one (C_1). For example, if you use a C_3H_8 span gas of concentration 200 µmol/mol, span the FID to respond with a value of 600 µmol/mol. As another example, if you use a CH_4 span gas with a concentration of 200 µmol/mol, span the FID to respond with a value of 200 µmol/mol.

* * * * *

(d) *THC FID CH_4 response factor determination.* This procedure is only for FID analyzers that measure THC. Since FID analyzers generally have a different response to CH_4 versus C_3H_8, determine each THC–FID analyzer's CH_4 response factor, $RF_{CH4[THC–FID]}$, after FID optimization. Use the most recent $RF_{CH4[THC–FID]}$ measured according to this section in the calculations for HC determination described in § 1065.660 to compensate for CH_4 response. Determine $RF_{CH4[THC–FID]}$ as follows, noting that you do not determine $RF_{CH4[THC–FID]}$ for FIDs that are calibrated and spanned using CH_4 with a nonmethane cutter:

(1) Select a C_3H_8 span gas concentration that you use to span your analyzers before emission testing. Use only span gases that meet the specifications of § 1065.750. Record the C_3H_8 concentration of the gas.

(2) Select a CH_4 span gas concentration that you use to span your analyzers before emission testing. Use only span gases that meet the specifications of § 1065.750. Record the CH_4 concentration of the gas.

(3) Start and operate the FID analyzer according to the manufacturer's instructions.

(4) Confirm that the FID analyzer has been calibrated using C_3H_8. Calibrate on a carbon number basis of one (C_1). For example, if you use a C_3H_8 span gas of concentration 200 µmol/mol, span the FID to respond with a value of 600 µmol/mol.

(5) Zero the FID with a zero gas that you use for emission testing.

(6) Span the FID with the C_3H_8 span gas that you selected under paragraph (d)(1) of this section.

(7) Introduce at the sample port of the FID analyzer, the CH_4 span gas that you selected under paragraph (d)(2) of this section.

(8) Allow time for the analyzer response to stabilize. Stabilization time may include time to purge the analyzer and to account for its response.

(9) While the analyzer measures the CH_4 concentration, record 30 seconds of sampled data. Calculate the arithmetic mean of these values.

(10) For analyzers with multiple ranges, you need to perform the procedure in this paragraph (d) only on a single range.

(11) Divide the mean measured concentration by the recorded span concentration of the CH_4 calibration gas. The result is the FID analyzer's response factor for CH_4, $RF_{CH4[THC–FID]}$.

(e) *THC FID CH_4 response verification.* This procedure is only for FID analyzers that measure THC. If the value of $RF_{CH4[THC–FID]}$ from paragraph (d) of this section is within ±5% of its most recent previously determined value, the THC FID passes the CH_4 response verification. For example, if the most recent previous value for $RF_{CH4[THC–FID]}$ was 1.05 and it changed by ±0.05 to become 1.10 or it changed by −0.05 to become 1.00, either case would be acceptable because ±4.8% is less than ±5%. Verify $RF_{CH4[THC–FID]}$ as follows:

* * * * *

(4) For analyzers with multiple ranges, you need to perform the procedure in this paragraph (e) only on a single range.

■ 244. Section 1065.362 is amended by adding paragraph (d)(15) to read as follows:

§ 1065.362 Non-stoichiometric raw exhaust FID O_2 interference verification.

* * * * *

(d) * * *

(15) For analyzers with multiple ranges, you need to perform the procedure in this paragraph (d) only on a single range.

■ 245. Section 1065.365 is amended by revising paragraphs (a), (b), (d)(1), (e)(1), (f) introductory text, and (f)(1) to read as follows:

§ 1065.365 Nonmethane cutter penetration fractions.

(a) *Scope and frequency.* If you use a FID analyzer and a nonmethane cutter (NMC) to measure methane (CH_4), determine the nonmethane cutter's penetration fractions of CH_4, $PF_{CH4,}$ and ethane, $PF_{C2H6.}$ As detailed in this section, these penetration fractions may be determined as a combination of NMC penetration fractions and FID analyzer response factors, depending on your particular NMC and FID analyzer configuration. Perform this verification after installing the nonmethane cutter. Repeat this verification within 185 days of testing to verify that the catalytic activity of the cutter has not deteriorated. Note that because nonmethane cutters can deteriorate rapidly and without warning if they are operated outside of certain ranges of gas concentrations and outside of certain temperature ranges, good engineering judgment may dictate that you determine a nonmethane cutter's penetration fractions more frequently.

(b) *Measurement principles.* A nonmethane cutter is a heated catalyst that removes nonmethane hydrocarbons from an exhaust sample stream before the FID analyzer measures the remaining hydrocarbon concentration. An ideal nonmethane cutter would have a CH_4 penetration fraction, $PF_{CH4,}$ of 1.000, and the penetration fraction for all other nonmethane hydrocarbons would be 0.000, as represented by $PF_{C2H6.}$ The emission calculations in § 1065.660 use the measured values from this verification to account for less than ideal NMC performance.

* * * * *

(d) * * *

(1) Select CH_4 and C_2H_6 analytical gas mixtures and ensure that both mixtures meet the specifications of § 1065.750. Select a CH_4 concentration that you would use for spanning the FID during emission testing and select a C_2H_6 concentration that is typical of the peak NMHC concentration expected at the hydrocarbon standard or equal to the THC analyzer's span value. For CH_4 analyzers with multiple ranges, perform this procedure on the highest range used for emission testing.

* * * * *

(e) * * *

(1) Select CH_4 and C_2H_6 analytical gas mixtures and ensure that both mixtures meet the specifications of § 1065.750. Select a CH_4 concentration that you would use for spanning the FID during emission testing and select a C_2H_6 concentration that is typical of the peak NMHC concentration expected at the hydrocarbon standard and the C_2H_6 concentration typical of the peak total hydrocarbon (THC) concentration expected at the hydrocarbon standard or equal to the THC analyzer's span value. For CH_4 analyzers with multiple ranges, perform this procedure on the highest range used for emission testing.

* * * * *

(f) *Procedure for a FID calibrated with CH_4, bypassing the NMC.* If you use a FID with an NMC that is calibrated with CH_4, by bypassing the NMC, determine its combined ethane (C_2H_6) response factor and penetration fraction, $RFPF_{C2H6[NMC-FID],}$ as well as its CH_4 penetration fraction, $PF_{CH4[NMC-FID]}$, as follows:

(1) Select CH_4 and C_2H_6 analytical gas mixtures and ensure that both mixtures meet the specifications of § 1065.750. Select a CH_4 concentration that you would use for spanning the FID during emission testing and select a C_2H_6 concentration that is typical of the peak NMHC concentration expected at the hydrocarbon standard or equal to the THC analyzer's span value. For CH_4 analyzers with multiple ranges, perform this procedure on the highest range used for emission testing.

* * * * *

■ 246. A new § 1065.369 is added to subpart D to read as follows:

§ 1065.369 H_2O, CO, and CO_2 interference verification for photoacoustic alcohol analyzers.

(a) *Scope and frequency.* If you measure ethanol or methanol using a photoacoustic analyzer, verify the amount of H_2O, CO, and CO_2 interference after initial analyzer installation and after major maintenance.

(b) *Measurement principles.* H_2O, CO, and CO_2 can positively interfere with a photoacoustic analyzer by causing a response similar to ethanol or methanol. If the photoacoustic analyzer uses compensation algorithms that utilize measurements of other gases to meet this interference verification, simultaneously conduct these other measurements to test the compensation algorithms during the analyzer interference verification.

(c) *System requirements.* Photoacoustic analyzers must have combined interference that is within (0.0 ± 0.5) μmol/mol. We strongly recommend a lower interference that is within (0.0 ± 0.25) μmol/mol.

(d) *Procedure.* Perform the interference verification by following the procedure in § 1065.375(d), comparing the results to paragraph (c) of this section.

■ 247. Section 1065.370 is amended by revising paragraphs (d)(9) and (e)(5) to read as follows:

§ 1065.370 CLD CO_2 and H_2O quench verification.

* * * * *

(d) * * *

(9) While flowing NO and CO_2 through the gas divider, stabilize the output of the gas divider. Determine the CO_2 concentration from the gas divider output, applying gas property correction as necessary to ensure accurate gas division, or measure it using an NDIR. Record this concentration, $x_{CO2act,}$ and use it in the quench verification calculations in § 1065.675. Alternatively, you may use a simple gas blending device and use an NDIR to determine this CO_2 concentration. If you use an NDIR, it must meet the requirements of this part for laboratory testing and you must span it with the CO_2 span gas from paragraph (d)(4) of this section.

* * * * *

(e) * * *

(5) Humidify the NO span gas by bubbling it through distilled H_2O in a sealed vessel. If the humidified NO span gas sample does not pass through a sample dryer for this verification test, control the vessel temperature to generate an H_2O level approximately equal to the maximum mole fraction of H_2O expected during emission testing. If the humidified NO span gas sample does not pass through a sample dryer, the quench verification calculations in § 1065.675 scale the measured H_2O quench to the highest mole fraction of H_2O expected during emission testing. If the humidified NO span gas sample passes through a dryer for this verification test, control the vessel temperature to generate an H_2O level at least as high as the level determined in § 1065.145(e)(2). For this case, the quench verification calculations in

§ 1065.675 do not scale the measured H_2O quench.

* * * * *

■ 248. Section 1065.375 is amended by revising paragraph (d) to read as follows:

§ 1065.375 Interference verification for N_2O analyzers.

* * * * *

(d) *Procedure.* Perform the interference verification as follows:

(1) Start, operate, zero, and span the N_2O analyzer as you would before an emission test. If the sample is passed through a dryer during emission testing, you may run this verification test with the dryer if it meets the requirements of § 1065.342. Operate the dryer at the same conditions as you will for an emission test. You may also run this verification test without the sample dryer.

(2) Create a humidified test gas by bubbling a multi component span gas that incorporates the target interference species and meets the specifications in § 1065.750 through distilled H_2O in a sealed vessel. If the sample is not passed through a dryer during emission testing, control the vessel temperature to generate an H_2O level at least as high as the maximum expected during emission testing. If the sample is passed through a dryer during emission testing, control the vessel temperature to generate an H_2O level at least as high as the level determined in § 1065.145(e)(2) for that dryer. Use interference span gas concentrations that are at least as high as the maximum expected during testing.

(3) Introduce the humidified interference test gas into the sample system. You may introduce it downstream of any sample dryer, if one is used during testing.

(4) If the sample is not passed through a dryer during this verification test, measure the H_2O mole fraction, $x_{H2O,}$ of the humidified interference test gas as close as possible to the inlet of the analyzer. For example, measure dewpoint, $T_{dew,}$ and absolute pressure, $p_{total,}$ to calculate $x_{H2O.}$ Verify that the H_2O content meets the requirement in paragraph (d)(2) of this section. If the sample is passed through a dryer during this verification test, you must verify that the H_2O content of the humidified test gas downstream of the vessel meets the requirement in paragraph (d)(2) of this section based on either direct measurement of the H_2O content (e.g., dewpoint and pressure) or an estimate based on the vessel pressure and temperature. Use good engineering judgment to estimate the H_2O content. For example, you may use previous direct measurements of H_2O content to verify the vessel's level of saturation.

(5) If a sample dryer is not used in this verification test, use good engineering judgment to prevent condensation in the transfer lines, fittings, or valves from the point where x_{H2O} is measured to the analyzer. We recommend that you design your system so that the wall temperatures in the transfer lines, fittings, and valves from the point where x_{H2O} is measured to the analyzer are at least 5 °C above the local sample gas dewpoint.

(6) Allow time for the analyzer response to stabilize. Stabilization time may include time to purge the transfer line and to account for analyzer response.

(7) While the analyzer measures the sample's concentration, record its output for 30 seconds. Calculate the arithmetic mean of this data. When performed with all the gases simultaneously, this is the combined interference.

(8) The analyzer meets the interference verification if the result of paragraph (d)(7) of this section meets the tolerance in paragraph (c) of this section.

(9) You may also run interference procedures separately for individual interference gases. If the interference gas levels used are higher than the maximum levels expected during testing, you may scale down each observed interference value (the arithmetic mean of 30 second data described in paragraph (d)(7) of this section) by multiplying the observed interference by the ratio of the maximum expected concentration value to the actual value used during this procedure. You may run separate interference concentrations of H_2O (down to 0.025 mol/mol H_2O content) that are lower than the maximum levels expected during testing, but you must scale up the observed H_2O interference by multiplying the observed interference by the ratio of the maximum expected H_2O concentration value to the actual value used during this procedure. The sum of the scaled interference values must meet the tolerance for combined interference as specified in paragraph (c) of this section.

■ 249. Section 1065.376 is amended by revising paragraphs (b) and (d)(2) to read as follows:

§ 1065.376 Chiller NO_2 penetration.

* * * * *

(b) *Measurement principles.* A chiller removes H_2O, which can otherwise interfere with a NO_X measurement. However, liquid H_2O remaining in an improperly designed chiller can remove NO_2 from the sample. If a chiller is used without an NO_2-to-NO converter upstream, it could remove NO_2 from the sample prior NO_X measurement.

* * * * *

(d) * * *

(2) *Equipment setup and data collection.* (i) Zero and span the total NO_X gas analyzer(s) as you would before emission testing.

(ii) Select an NO_2 calibration gas, balance gas of dry air, that has an NO_2 concentration within ±5% of the maximum NO_2 concentration expected during testing.

(iii) Overflow this calibration gas at the gas sampling system's probe or overflow fitting. Allow for stabilization of the total NO_X response, accounting only for transport delays and instrument response.

(iv) Calculate the mean of 30 seconds of recorded total NO_X data and record this value as $x_{NOxref.}$

(v) Stop flowing the NO_2 calibration gas.

(vi) Next saturate the sampling system by overflowing a dewpoint generator's output, set at a dewpoint of 50 °C, to the gas sampling system's probe or overflow fitting. Sample the dewpoint generator's output through the sampling system and chiller for at least 10 minutes until the chiller is expected to be removing a constant rate of H_2O.

(vii) Immediately switch back to overflowing the NO_2 calibration gas used to establish $x_{NOxref.}$ Allow for stabilization of the total NO_X response, accounting only for transport delays and instrument response. Calculate the mean of 30 seconds of recorded total NO_X data and record this value as $x_{NOxmeas.}$

(viii) Correct $x_{NOxmeas}$ to x_{NOxdry} based upon the residual H_2O vapor that passed through the chiller at the chiller's outlet temperature and pressure.

* * * * *

Subpart E—[Amended]

■ 250. Section 1065.405 is amended by revising paragraph (a) and adding paragraph (f) to read as follows:

§ 1065.405 Test engine preparation and maintenance.

* * * * *

(a) If you are testing an emission-data engine for certification, make sure it is built to represent production engines, consistent with paragraph (f) of this section. This includes governors that you normally install on production engines. Production engines should also be tested with their installed governors. If you do not install governors on

production engines, simulate a governor that is representative of a governor that others will install on your production engines. In certain circumstances, you may incorporate test cell components to simulate an in-use configuration, consistent with good engineering judgment. For example, §§ 1065.122 and 1065.125 allow the use of test cell components to represent engine cooling and intake air systems.

* * * * *

(f) This paragraph (f) defines the components that are considered to be part of the engine for laboratory testing. See § 1065.110 for provisions related to system boundaries with respect to work inputs and outputs.

(1) This paragraph (f)(1) describes certain criteria for considering a component to be part of the test engine. The criteria are intended to apply broadly, such that a component would generally be considered part of the engine in cases of uncertainty. An engine-related component meeting all the following criteria is considered to be part of the test engine for purposes of testing and for stabilizing emission levels, preconditioning, and measuring emission levels:

(i) The component directly affects the functioning of the engine, is related to the control of emissions, or transmits engine power. This would include engine cooling systems, engine controls, and transmissions.

(ii) The component is covered by the applicable certificate of conformity. For example, this criterion would typically exclude radiators not described in an application for certification.

(iii) The component is not part of the laboratory setup, or it is used for other engines.

(2) Although components meeting the criteria specified in paragraphs (f)(1)(i) or (ii) of this section, but not the criterion specified in paragraph (f)(1)(iii) of this section, are not considered to be part of the test engine, you must precondition these components along with the test engine.

Subpart F—[Amended]

■ 251. Section 1065.501 is amended as follows:

■ a. By redesignating paragraphs (b) through (d) as paragraphs (c) through (e), respectively.

■ b. By adding a new paragraph (b).

■ c. By revising the redesignated paragraph (c)(2) introductory text.

§ 1065.501 Overview.

* * * * *

(b) Unless we specify otherwise, you may control the regeneration timing of infrequently regenerated aftertreatment devices such as diesel particulate filters using good engineering judgment. You may control the regeneration timing using a sequence of engine operating conditions or you may initiate regeneration with an external regeneration switch or other command. This provision would also allow you to ensure that a regeneration event does not occur during an emission test.

(c) * * *

(2) *Steady-state cycles.* Steady-state duty cycles are typically specified in the standard-setting part as a list of discrete operating points (modes or notches), where each operating point has one value of a normalized speed command and one value of a normalized torque (or power) command. Ramped-modal cycles for steady-state testing also list test times for each mode and transition times between modes where speed and torque are linearly ramped between modes, even for cycles with % power. Start a steady-state cycle as a hot running test, where you start to measure emissions after an engine is started, warmed up and running. Run a steady-state duty cycle as a discrete-mode cycle or a ramped-modal cycle, as follows:

* * * * *

■ 252. A new § 1065.516 is added to subpart F to read as follows:

§ 1065.516 Sample system decontamination and preconditioning.

This section describes how to manage the impact of sampling system contamination on emission measurements. Use good engineering judgement to determine if you should decontaminate and precondition your sampling system. Contamination occurs when a regulated pollutant accumulates in the sample system in a high enough concentration to cause release during emission tests. Hydrocarbons and PM are generally the only regulated pollutants that contaminate sample systems. A sampling system is considered decontaminated if the contaminants are in equilibrium with measured exhaust emissions. Note that although this section focuses on avoiding excessive contamination of sample systems, you must also use good engineering judgment to avoid loss of sample to a sample system that is too clean. The goal of decontamination is not to perfectly clean the sample system, but rather to achieve equilibrium between the sample system and the exhaust so emission components are neither lost to nor entrained from the sample system.

(a) You may perform contamination checks as follows to determine if decontamination is needed:

(1) For dilute exhaust sampling systems, measure hydrocarbon and PM emissions by sampling with the CVS dilution air turned on, without an engine connected to it.

(2) For raw analyzers and systems that collect PM samples from raw exhaust, measure hydrocarbon and PM emissions by sampling purified air or nitrogen.

(3) When calculating zero emission levels, apply all applicable corrections, including initial THC contamination and diluted (CVS) exhaust background corrections.

(4) Sampling systems are considered contaminated if either of the following conditions applies:

(i) The hydrocarbon emission level exceeds 2% of the flow-weighted mean wet, net concentration expected at the HC standard.

(ii) The PM emission level exceeds 5% of the level expected at the standard and exceeds 20 μg on a 47 mm PTFE membrane filter.

(b) To precondition/decontaminate sampling systems, use the following recommended procedure or use good engineering judgment to select a different procedure:

(1) Start the engine and use good engineering judgment to operate it at a condition that generates high exhaust temperatures at the sample probe inlet.

(2) Operate any dilution systems at their expected flow rates. Prevent aqueous condensation in the dilution systems.

(3) Operate any PM sampling systems at their expected flow rates.

(4) Sample PM for at least 10 min using any sample media. You may change sample media at any time during this process and you may discard them without weighing them.

(5) You may purge any gaseous sampling systems that do not require decontamination during this procedure.

(6) You may conduct calibrations or verifications on any idle equipment or analyzers during this procedure.

(c) If your sampling system is still contaminated following the procedures specified in paragraph (b) of this section, you may use more aggressive procedures to decontaminate the sampling system, as long as the decontamination does not cause the sampling system to be cleaner than an equilibrium condition such that artificially low emission measurements may result.

■ 253. A new § 1065.518 is added to subpart F to read as follows:

§ 1065.518 Engine preconditioning.

(a) This section applies for engines where measured emissions are affected by prior operation, such as with a diesel

engine that relies on urea-based selective catalytic reduction. Note that § 1065.520(e) allows you to run practice duty cycles before the emission test; this section recommends how to do this for the purpose of preconditioning the engine. We may test your engine after completing only the minimum amount of preconditioning recommended in this section. For subsequent testing, such as steady-state testing following transient testing, we may consider the previous test cycle as preconditioning. Follow the standard-setting part if it specifies a different engine preconditioning procedure.

(b) The intent of engine preconditioning is to manage the representativeness of emissions over the duty cycle, as described in § 1065.10(c)(1), by conditioning the engine to a state where its emissions are representative of in-use operation.

(c) This paragraph (c) specifies the engine preconditioning procedures for different types of duty cycles. You may measure emissions during preconditioning cycles, as long as you perform a predefined number of preconditioning cycles. You must identify before each duty cycle whether it is a preconditioning cycle or an emission test. You may not abort an emission test based on emissions measured during preconditioning.

(1) *Cold-start transient cycle.* Precondition the engine by running at least one cold-start or hot-start transient cycle. Immediately after completing the last preconditioning cycle, shut down the engine and begin the cold soak as described in § 1065.530(a)(1).

(2) *Hot-start transient cycle.* Precondition the engine by running at least one hot-start transient cycle. Shut down the engine after completing the last preconditioning cycle and start the hot-start transient test as soon as practical.

(3) *Hot-running transient cycle.* Precondition the engine by running at least one hot-running transient cycle. Start the official hot-running transient cycle as soon as practical after completing the last preconditioning cycle.

(4) *Discrete-mode cycle for steady-state testing.* Precondition the engine at the same operating condition as the next test mode, unless the standard-setting part specifies sampling time limits.

(5) *Ramped-modal cycle for steady-state testing.* If you run the ramped-modal cycle after a transient test, additional preconditioning is allowed, but not required. If you perform additional preconditioning, we recommend running the first non-idle mode of the ramped-modal cycle or a mode approximating 50% power.

(d) You may conduct calibrations or verifications on any idle equipment or analyzers during engine preconditioning.

■ 254. Section 1065.520 is amended by removing paragraph (g) and revising paragraphs (a), (e), and (f) to read as follows:

§ 1065.520 Pre-test verification procedures and pre-test data collection.

(a) For tests in which you measure PM emissions, follow the procedures for PM sample preconditioning and tare weighing according to § 1065.590.

* * * * *

(e) You may perform a final calibration of the speed, torque, and proportional-flow control systems, which may include performing practice duty cycles (or portions of duty cycles). This may be done in conjunction with the preconditioning in § 1065.518.

(f) Verify the amount of nonmethane hydrocarbon contamination in the exhaust and background HC sampling systems within 8 hours before the start of the first test interval of each duty-cycle sequence for laboratory tests. You may verify the contamination of a background HC sampling system by reading the last bag fill and purge using zero gas. For any NMHC measurement system that involves separately measuring CH_4 and subtracting it from a THC measurement or for any CH_4 measurement system that uses an NMC, verify the amount of THC contamination using only the THC analyzer response. There is no need to operate any separate CH_4 analyzer for this verification; however, you may measure and correct for THC contamination in the CH_4 sample train for the cases where NMHC is determined by subtracting CH_4 from THC or, where CH_4 is determined, using an NMC as configured in § 1065.365(d), (e), and (f); and using the calculations in § 1065.660(b)(2). Perform this verification as follows:

(1) Select the HC analyzer range for measuring the flow-weighted mean concentration expected at the HC standard.

(2) Zero the HC analyzer at the analyzer zero or sample port. Note that FID zero and span balance gases may be any combination of purified air or purified nitrogen that meets the specifications of § 1065.750. We recommend FID analyzer zero and span gases that contain approximately the flow-weighted mean concentration of O_2 expected during testing.

(3) Span the HC analyzer using span gas introduced at the analyzer span or sample port. Span on a carbon number basis of one (C_1). For example, if you use a C_3H_8 span gas of concentration 200 μmol/mol, span the FID to respond with a value of 600 μmol/mol.

(4) Overflow zero gas at the HC probe inlet or into a tee near the probe outlet.

(5) Measure the THC concentration in the sampling and background systems as follows:

(i) For continuous sampling, record the mean THC concentration as overflow zero gas flows.

(ii) For batch sampling, fill the sample medium (e.g., bag) and record its mean THC concentration.

(iii) For the background system, record the mean THC concentration of the last fill and purge.

(6) Record this value as the initial THC concentration, $x_{THC[THC-FID]init}$, and use it to correct measured values as described in § 1065.660.

(7) You may correct the measured initial THC concentration for drift as follows:

(i) For batch and continuous HC analyzers, after determining the initial THC concentration, flow zero gas to the analyzer zero or sample port. When the analyzer reading is stable, record the mean analyzer value.

(ii) Flow span gas to the analyzer span or sample port. When the analyzer reading is stable, record the mean analyzer value.

(iii) Use mean analyzer values from paragraphs (f)(2), (f)(3), (f)(7)(i), and (f)(7)(ii) of this section to correct the initial THC concentration recorded in paragraph (f)(6) of this section for drift, as described in § 1065.550.

(8) If any of the $x_{THC[THC-FID]init}$ values exceed the greatest of the following values, determine the source of the contamination and take corrective action, such as purging the system during an additional preconditioning cycle or replacing contaminated portions:

(i) 2% of the flow-weighted mean wet, net concentration expected at the HC (THC or NMHC) standard.

(ii) 2% of the flow-weighted mean wet, net concentration of HC (THC or NMHC) measured during testing.

(iii) 2 μmol/mol.

(9) If corrective action does not resolve the deficiency, you may request to use the contaminated system as an alternate procedure under § 1065.10.

■ 255. Section 1065.526 is amended by revising paragraphs (c)(3) and (d)(1) to read as follows:

§ 1065.526 Repeating of void modes or test intervals.

* * * * *

(c) * * *

(3) Precondition the engine by operating it at the mode at which the

test was interrupted and continue with the duty cycle as specified in the standard-setting part.

* * * * *

(d) * * *

(1) Use good engineering judgment to restart (as applicable) and precondition the engine to the same condition as would apply for normal testing. This may require you to complete the voided test interval. For example, you may generally repeat a hot-start test of a heavy-duty highway engine after completing the voided hot-start test and allowing the engine to soak for 20 minutes.

* * * * *

■ 256. Section 1065.530 is amended by removing paragraph (b)(13) and revising paragraphs (a), (b)(12), and (c) to read as follows:

§ 1065.530 Emission test sequence.

(a) Time the start of testing as follows:

(1) Perform one of the following if you precondition the engine as described in § 1065.518:

(i) For cold-start duty cycles, shut down the engine. Unless the standard-setting part specifies that you may only perform a natural engine cooldown, you may perform a forced engine cooldown. Use good engineering judgment to set up systems to send cooling air across the engine, to send cool oil through the engine lubrication system, to remove heat from coolant through the engine cooling system, and to remove heat from any exhaust aftertreatment systems. In the case of a forced aftertreatment cooldown, good engineering judgment would indicate that you not start flowing cooling air until the aftertreatment system has cooled below its catalytic activation temperature. For platinum-group metal catalysts, this temperature is about 200 °C. Once the aftertreatment system has naturally cooled below its catalytic activation temperature, good engineering judgment would indicate that you use clean air with a temperature of at least 15 °C, and direct the air through the aftertreatment system in the normal direction of exhaust flow. Do not use any cooling procedure that results in unrepresentative emissions (see § 1065.10(c)(1)). You may start a cold-start duty cycle when the temperatures of an engine's lubricant, coolant, and aftertreatment systems are all between (20 and 30) °C.

(ii) For hot-start emission measurements, immediately after completing the last preconditioning cycle, shut down the engine and as soon as practical start the official hot-start transient cycle. We will start the official hot-start transient cycle within 1 minute of the conclusion of the preconditioning cycle where applicable. Start the hot-start duty cycle as specified in the standard-setting part if it is different from this procedure.

(iii) For testing that involves hot-stabilized emission measurements, such as any steady-state testing, as soon as practical after completing the discrete-mode preconditioning time or the last preconditioning cycle, without shutting down the engine, start the official hot-stabilized cycle. We will start the official hot-stabilized cycle within 1 minute of the conclusion of the preconditioning cycle where applicable. If the last preconditioning cycle ends with a different operating condition than the first mode of the hot-stabilized cycle, add a linear transition period of 20 s between cycles where you linearly ramp the (denormalized) reference speed and torque values over the transition period.

(2) If you do not precondition the engine as described in § 1065.518, perform one of the following:

(i) For cold-start duty cycles, prepare the engine according to paragraph (a)(1)(i) of this section.

(ii) For hot-start emission measurements, first operate the engine at any speed above peak-torque speed and at (65 to 85) % of maximum mapped power until either the engine coolant, block, or head absolute temperature is within ±2% of its mean value for at least 2 min or until the engine thermostat controls engine temperature. Shut down the engine. Start the duty cycle within 20 min of engine shutdown.

(iii) For testing that involves hot-stabilized emission measurements, bring the engine either to warm idle or the first operating point of the duty cycle. Start the test within 10 min of achieving temperature stability. Determine temperature stability either as the point at which the engine coolant, block, or head absolute temperature is within ±2% of its mean value for at least 2 min, or as the point at which the engine thermostat controls engine temperature.

(b) * * *

(12) Drain any accumulated condensate from the intake air system before starting a duty cycle, as described in § 1065.125(e)(1). If engine and aftertreatment preconditioning cycles are run before the duty cycle, treat the preconditioning cycles and any associated soak period as part of the duty cycle for the purpose of opening drains and draining condensate. Note that you must close any intake air condensate drains that are not representative of those normally open during in-use operation.

(c) Start testing as follows:

(1) If engine starting is not part of the duty cycle, perform the following for the various duty cycles:

(i) *Transient and steady-state ramped-modal cycles.* Simultaneously start recording continuous data, any electronic integrating devices, batch sampling, and execution of the duty cycle.

(ii) *Steady-state discrete-mode cycles.* Control the engine operation to match the first mode in the test cycle. This will require controlling engine speed and load, engine load, or other operator demand settings, as specified in the standard-setting part. Follow the instructions in the standard-setting part to determine how long to stabilize engine operation at each mode, how long to sample emissions at each mode, and how to transition between modes. For each mode, simultaneously start recording continuous data, any electronic integrating devices, and batch sampling.

(2) If engine starting is part of the duty cycle, simultaneously start recording continuous data, any electronic integrating devices, and batch sampling before attempting to start the engine. Initiate the duty cycle when the engine starts.

(3) For batch sampling systems you may use good engineering judgment to advance or delay the start and stop of sampling with respect to the beginning and end of the test interval to improve the accuracy of the batch sample.

* * * * *

■ 257. Section 1065.545 is revised to read as follows:

§ 1065.545 Verification of proportional flow control for batch sampling.

For any proportional batch sample such as a bag or PM filter, demonstrate that proportional sampling was maintained using one of the following, noting that you may omit up to 5% of the total number of data points as outliers:

(a) For any pair of flow rates, use recorded sample and total flow rates, where total flow rate means the raw exhaust flow rate for raw exhaust sampling and the dilute exhaust flow rate for CVS sampling, or their 1 Hz means with the statistical calculations in § 1065.602. Determine the standard error of the estimate, *SEE,* of the sample flow rate versus the total flow rate. For each test interval, demonstrate that *SEE* was less than or equal to 3.5% of the mean sample flow rate.

(b) For any pair of flow rates, use recorded sample and total flow rates,

where total flow rate means the raw exhaust flow rate for raw exhaust sampling and the dilute exhaust flow rate for CVS sampling, or their 1 Hz means to demonstrate that each flow rate was constant within ±2.5% of its respective mean or target flow rate. You may use the following options instead of recording the respective flow rate of each type of meter:

(1) *Critical-flow venturi option.* For critical-flow venturis, you may use recorded venturi-inlet conditions or their 1 Hz means. Demonstrate that the flow density at the venturi inlet was constant within ±2.5% of the mean or target density over each test interval. For a CVS critical-flow venturi, you may demonstrate this by showing that the absolute temperature at the venturi inlet was constant within ±4% of the mean or target absolute temperature over each test interval.

(2) *Positive-displacement pump option.* You may use recorded pump-inlet conditions or their 1 Hz means. Demonstrate that the flow density at the pump inlet was constant within ±2.5% of the mean or target density over each test interval. For a CVS pump, you may demonstrate this by showing that the absolute temperature at the pump inlet was constant within ±2% of the mean or target absolute temperature over each test interval.

(c) Using good engineering judgment, demonstrate with an engineering analysis that the proportional-flow control system inherently ensures proportional sampling under all circumstances expected during testing. For example, you might use CFVs for both sample flow and total dilute exhaust (CVS) flow and demonstrate that they always have the same inlet pressures and temperatures and that they always operate under critical-flow conditions.

■ 258. Section 1065.546 is amended by revising the section heading and the introductory text to read as follows:

§ 1065.546 Verification of minimum dilution ratio for PM batch sampling.

Use continuous flows and/or tracer gas concentrations for transient and ramped-modal cycles to verify the minimum dilution ratios for PM batch sampling as specified in § 1065.140(e)(2) over the test interval. You may use mode-average values instead of continuous measurements for discrete mode steady-state duty cycles. Determine the minimum primary and minimum overall dilution ratios using one of the following methods (you may use a different method for each stage of dilution):

* * * * *

■ 259. Section 1065.550 is revised to read as follows:

§ 1065.550 Gas analyzer range verification and drift verification.

(a) *Range verification.* If an analyzer operated above 100% of its range at any time during the test, perform the following steps:

(1) For batch sampling, re-analyze the sample using the lowest analyzer range that results in a maximum instrument response below 100%. Report the result from the lowest range from which the analyzer operates below 100% of its range.

(2) For continuous sampling, repeat the entire test using the next higher analyzer range. If the analyzer again operates above 100% of its range, repeat the test using the next higher range. Continue to repeat the test until the analyzer always operates at less than 100% of its range.

(b) *Drift verification.* Gas analyzer drift verification is required for all gaseous exhaust constituents for which an emission standard applies. It is also required for CO_2 even if there is no CO_2 emission standard. It is not required for other gaseous exhaust constituents for which only a reporting requirement applies (such as CH_4 and N_2O).

(1) Verify drift using one of the following methods:

(i) For regulated exhaust constituents determined from the mass of a single component, perform drift verification based on the regulated constituent. For example, when NO_X mass is determined with a dry sample measured with a CLD and the removed water is corrected based on measured CO_2, CO, THC, and NO_X concentrations, you must verify the calculated NO_X value.

(ii) For regulated exhaust constituents determined from the masses of multiple subcomponents, perform the drift verification based on either the regulated constituent or all the mass subcomponents. For example, when NO_X is measured with separate NO and NO_2 analyzers, you must verify either the NO_X value or both the NO and NO_2 values.

(iii) For regulated exhaust constituents determined from the concentrations of multiple gaseous emission subcomponents prior to performing mass calculations, perform drift verification on the regulated constituent. You may not verify the concentration subcomponents (e.g., THC and CH_4 for NMHC) separately. For example, for NMHC measurements, perform drift verification on NMHC; do not verify THC and CH_4 separately.

(2) Drift verification requires two sets of emission calculations. For each set of calculations, include all the constituents in the drift verification. Calculate one set using the data before drift correction and calculate the other set after correcting all the data for drift according to § 1065.672. Note that for purposes of drift verification, you must leave unaltered any negative emission results over a given test interval (i.e., do not set them to zero). These unaltered results are used when verifying either test interval results or composite brake-specific emissions over the entire duty cycle for drift. For each constituent to be verified, both sets of calculations must include the following:

(i) Calculated mass (or mass rate) emission values over each test interval.

(ii) If you are verifying each test interval based on brake-specific values, calculate brake-specific emission values over each test interval.

(iii) If you are verifying over the entire duty cycle, calculate composite brake-specific emission values.

(3) The duty cycle is verified for drift if you satisfy the following criteria:

(i) For each regulated gaseous exhaust constituent, you must satisfy one of the following:

(A) For each test interval of the duty cycle, the difference between the uncorrected and the corrected brake-specific emission values of the regulated constituent must be within ±4% of the uncorrected value or the applicable emissions standard, whichever is greater. Alternatively, the difference between the uncorrected and the corrected emission mass (or mass rate) values of the regulated constituent must be within ±4% of the uncorrected value or the composite work (or power) multiplied by the applicable emissions standard, whichever is greater. For purposes of verifying each test interval, you may use either the reference or actual composite work (or power).

(B) For each test interval of the duty cycle and for each mass subcomponent of the regulated constituent, the difference between the uncorrected and the corrected brake-specific emission values must be within ±4% of the uncorrected value. Alternatively, the difference between the uncorrected and the corrected emissions mass (or mass rate) values must be within ±4% of the uncorrected value.

(C) For the entire duty cycle, the difference between the uncorrected and the corrected composite brake-specific emission values of the regulated constituent must be within ±4% of the uncorrected value or applicable emission standard, whichever is greater.

(D) For the entire duty cycle and for each subcomponent of the regulated constituent, the difference between the

uncorrected and the corrected composite brake-specific emission values must be within ±4% of the uncorrected value.

(ii) Where no emission standard applies for CO_2, you must satisfy one of the following:

(A) For each test interval of the duty cycle, the difference between the uncorrected and the corrected brake-specific CO_2 values must be within ±4% of the uncorrected value; or the difference between the uncorrected and the corrected CO_2 mass (or mass rate) values must be within ±4% of the uncorrected value.

(B) For the entire duty cycle, the difference between the uncorrected and the corrected composite brake-specific CO_2 values must be within ±4% of the uncorrected value.

(4) If the test is not verified for drift as described in paragraph (b)(1) of this section, you may consider the test results for the duty cycle to be valid only if, using good engineering judgment, the observed drift does not affect your ability to demonstrate compliance with the applicable emission standards. For example, if the drift-corrected value is less than the standard by at least two times the absolute difference between the uncorrected and corrected values, you may consider the data to be verified for demonstrating compliance with the applicable standard.

Subpart G—[Amended]

■ 260. Section 1065.601 is amended by revising paragraph (b) to read as follows:

§ 1065.601 Overview.

* * * * *

(b) You may use data from multiple systems to calculate test results for a single emission test, consistent with good engineering judgment. You may also make multiple measurements from a single batch sample, such as multiple weighings of a PM filter or multiple readings from a bag sample. Although you may use an average of multiple measurements from a single test, you may not use test results from multiple emission tests to report emissions. We allow weighted means where appropriate. You may discard statistical outliers, but you must report all results.

* * * * *

■ 261. Section 1065.630 is revised to read as follows:

§ 1065.630 1980 international gravity formula.

The acceleration of Earth's gravity, a_g, varies depending on your location. Calculate a_g at your latitude, as follows:

$$a_g = 9.7803267715 \cdot [1 + 5.2790414 \cdot 10^{-3} \cdot \sin^2(\theta) + 2.32718 \cdot 10^{-5} \cdot \sin^4(\theta) + 1.262 \cdot 10^{-7} \cdot \sin^6(\theta) + 7 \cdot 10^{-10} \cdot \sin^8(\theta)]$$

Eq. 1065.630-1

Where:

θ = Degrees north or south latitude.

Example:

θ = 45 °

$a_g = 9.7803267715 \cdot (1 + 5.2790414 \cdot 10^{-3} \cdot \sin^2(45) + 2.32718 \cdot 10^{-5} \cdot \sin^4(45) + 1.262 \cdot 10^{-7} \cdot \sin^6(45) + 7 \cdot 10^{-10} \cdot \sin^8(45)$

$a_g = 9.8061992026$ m/s²

■ 262. Section 1065.640 is amended by revising paragraphs (a), (b), and (e) to read as follows:

§ 1065.640 Flow meter calibration calculations.

* * * * *

* * * * *

(a) *Reference meter conversions.* The calibration equations in this section use molar flow rate, $\dot{n}_{ref}$, as a reference quantity. If your reference meter outputs a flow rate in a different quantity, such as standard volume rate, $\dot{V}_{stdref}$, actual volume rate, $\dot{V}_{actref}$, or mass rate, $\dot{m}_{ref}$, convert your reference meter output to a molar flow rate using the following equations, noting that while values for volume rate, mass rate, pressure, temperature, and molar mass may change during an emission test, you should ensure that they are as constant as practical for each individual set point during a flow meter calibration:

$$\dot{n}_{ref} = \frac{\dot{V}_{stdref} \cdot p_{std}}{T_{std} \cdot R} = \frac{\dot{V}_{actref} \cdot p_{act}}{T_{act} \cdot R} = \frac{\dot{m}_{ref}}{M_{mix}}$$

Eq. 1065.640-1

Where:

$\dot{n}_{ref}$ = reference molar flow rate.

$\dot{V}_{stdref}$ = reference volume flow rate, corrected to a standard pressure and a standard temperature.

$\dot{V}_{actref}$ = reference volume flow rate at the actual pressure and temperature of the flow rate.

$\dot{m}_{ref}$ = reference mass flow.

p_{std} = standard pressure.

p_{act} = actual pressure of the flow rate.

T_{std} = standard temperature.

T_{act} = actual temperature of the flow rate.

R = molar gas constant.

M_{mix} = molar mass of the flow rate.

Example 1:

$\dot{V}_{stdref}$ = 1000.00 ft³/min = 0.471948 m³/s

p_{std} = 29.9213 in Hg @ 32 °F = 101325 Pa

T_{std} = 68.0 °F = 293.15 K

R = 8.314472 J/(mol·K)

$$\dot{n}_{ref} = \frac{0.471948 \cdot 101325}{293.15 \cdot 8.314472}$$

$\dot{n}_{ref}$ = 19.619 mol/s

Example 2:

$\dot{m}_{ref}$ = 17.2683 kg/min = 287.805 g/s

M_{mix} = 28.7805 g/mol

$$\dot{n}_{ref} = \frac{287.805}{28.7805}$$

$\dot{n}_{ref}$ = 10.0000 mol/s

(b) *PDP calibration calculations.* For each restrictor position, calculate the following values from the mean values determined in § 1065.340, as follows:

(1) PDP volume pumped per revolution, V_{rev} (m^3/r):

$$V_{rev} = \frac{\bar{\dot{n}}_{ref} \cdot R \cdot \bar{T}_{in}}{\bar{p}_{in} \cdot \bar{f}_{nPDP}}$$

Eq. 1065.640-2

Example:
$\bar{\dot{n}}_{ref}$ = 25.096 mol/s
R = 8.314472 J/(mol·K)
$\bar{T}_{in}$ = 299.5 K
$\bar{p}_{in}$ = 98290 Pa
$\bar{f}_{nPDP}$ = 1205.1 r/min = 20.085 r/s

$$V_{rev} = \frac{25.096 \cdot 8.314472 \cdot 299.5}{98290 \cdot 20.085}$$

V_{rev} = 0.03166 m^3/r

(2) PDP slip correction factor, K_s (s/r):

$$K_s = \frac{1}{\bar{f}_{nPDP}} \cdot \sqrt{\frac{\bar{p}_{out} - \bar{p}_{in}}{\bar{p}_{out}}}$$

Eq. 1065.640-3

Example:
$\bar{f}_{nPDP}$ = 1205.1 r/min = 20.085 r/s
$\bar{p}_{out}$ = 100.103 kPa
$\bar{p}_{in>}$ = 98.290 kPa

$$K_s = \frac{1}{20.085} \cdot \sqrt{\frac{100.103 - 98.290}{100.103}}$$

K_s = 0.006700 s/r

(3) Perform a least-squares regression of PDP volume pumped per revolution, V_{rev}, versus PDP slip correction factor, K_s, by calculating slope, a_1, and intercept, a_0, as described in § 1065.602.

(4) Repeat the procedure in paragraphs (b)(1) through (3) of this section for every speed that you run your PDP.

(5) The following example illustrates these calculations:

TABLE 1 OF § 1065.640—EXAMPLE OF PDP CALIBRATION DATA

$\bar{f}_{nPDP}$ (r/min)	a_1 (m^3/min)	a_0 (m^3/r)
755.0	50.43	0.056
987.6	49.86	−0.013
1254.5	48.54	0.028
1401.3	47.30	−0.061

(6) For each speed at which you operate the PDP, use the corresponding slope, a_1, and intercept, a_0, to calculate flow rate during emission testing as described in § 1065.642.

* * * * *

(e) *CFV calibration.* Some CFV flow meters consist of a single venturi and some consist of multiple venturis, where different combinations of venturis are used to meter different flow rates. For CFV flow meters that consist of multiple venturis, either calibrate each venturi independently to determine a separate discharge coefficient, C_d, for each venturi, or calibrate each combination of venturis as one venturi. In the case where you calibrate a combination of venturis, use the sum of the active venturi throat areas as A_t, the square root of the sum of the squares of the active venturi throat diameters as d_t, and the ratio of the venturi throat to inlet diameters as the ratio of the square root of the sum of the active venturi throat diameters (d_t) to the diameter of the common entrance to all of the venturis (D). To determine the C_d for a single venturi or a single combination of venturis, perform the following steps:

(1) Use the data collected at each calibration set point to calculate an individual C_d for each point using Eq. 1065.640–4.

(2) Calculate the mean and standard deviation of all the C_d values according to Eqs. 1065.602–1 and 1065.602–2.

(3) If the standard deviation of all the C_d values is less than or equal to 0.3% of the mean C_d, use the mean C_d in Eq. 1065.642–4, and use the CFV only up to the highest r measured during calibration using the following equation:

$$r = 1 - \frac{\Delta p_{CFV}}{p_{in}}$$

Eq. 1065.640-13

Where:

Δp_{CFV} = Differential static pressure; venturi inlet minus venturi outlet.

(4) If the standard deviation of all the C_d values exceeds 0.3% of the mean C_d, omit the C_d value corresponding to the data point collected at the highest r measured during calibration.

(5) If the number of remaining data points is less than seven, take corrective action by checking your calibration data or repeating the calibration process. If you repeat the calibration process, we recommend checking for leaks, applying tighter tolerances to measurements and allowing more time for flows to stabilize.

(6) If the number of remaining C_d values is seven or greater, recalculate the mean and standard deviation of the remaining C_d values.

(7) If the standard deviation of the remaining C_d values is less than or equal to 0.3% of the mean of the remaining C_d, use that mean C_d in Eq. 1065.642–4, and use the CFV values only up to the highest r associated with the remaining C_d.

(8) If the standard deviation of the remaining C_d still exceeds 0.3% of the mean of the remaining C_d values, repeat the steps in paragraph (e)(4) through (8) of this section.

■ 263. Section 1065.642 is amended by revising paragraphs (a) and (c) to read as follows:

§ 1065.642 SSV, CFV, and PDP molar flow rate calculations.

* * * * *

(a) *PDP molar flow rate.* Based upon the speed at which you operate the PDP for a test interval, select the corresponding slope, a_1, and intercept, a_0, as calculated in § 1065.640, to calculate molar flow rate, $\dot{n}$ as follows:

$$\dot{n} = f_{nPDP} \cdot \frac{p_{in} \cdot V_{rev}}{R \cdot T_{in}}$$

Eq. 1065.642-1

Where:

$$V_{rev} = \frac{a_1}{f_{nPDP}} \cdot \sqrt{\frac{p_{out} - p_{in}}{p_{out}}} + a_0$$

Eq. 1065.642-2

Example:
a_1 = 50.43 (m^3/min) = 0.8405 (m^3/s)
f_{nPDP} = 755.0 r/min = 12.58 r/s
p_{out} = 99950 Pa
p_{in} = 98575 Pa
a_0 = 0.056 (m^3/r)
R = 8.314472 J/(mol·K)
$T_{in>}$ = 323.5 K
C_p = 1000 (J/m^3)/kPa
C_t = 60 s/min

$$V_{rev} = \frac{0.8405}{12.58} \cdot \sqrt{\frac{99950 - 98575}{99950}} + 0.056$$

V_{rev} = 0.06383 m³/r

$$\dot{n} = 12.58 \cdot \frac{98575 \cdot 0.06383}{8.314472 \cdot 323.5}$$

$\dot{n}$ = 29.428 mol/s

* * * * *

(c) *CFV molar flow rate.* Some CFV flow meters consist of a single venturi and some consist of multiple venturis, where different combinations of venturis are used to meter different flow rates. If you use multiple venturis and you calibrated each venturi independently to determine a separate discharge coefficient, C_d (or calibration coefficient, K_v), for each venturi, calculate the individual molar flow rates through each venturi and sum all their flow rates to determine $\dot{n}$. If you use multiple venturis and you calibrated each combination of venturis, calculate $\dot{n}$ using the sum of the active venturi throat areas as A_t, the square root of the sum of the squares of the active venturi throat diameters as d_t, and the ratio of the venturi throat to inlet diameters as the ratio of the square root of the sum of the active venturi throat diameters (d_t) to the diameter of the common entrance to all of the venturis (D).

(1) To calculate the molar flow rate through one venturi or one combination of venturis, use its respective mean C_d and other constants you determined according to § 1065.640 and calculate its molar flow rate $\dot{n}$ during an emission test, as follows:

$$\dot{n} = C_d \cdot C_f \cdot \frac{A_t \cdot p_{in}}{\sqrt{Z \cdot M_{mix} \cdot R \cdot T_{in}}}$$

Eq. 1065.642-4

Example:

C_d = 0.985

C_f = 0.7219

A_t = 0.00456 m²

p_{in} = 98836 Pa

Z = 1

M_{mix} = 28.7805 g/mol = 0.0287805 kg/mol

R = 8.314472 J/(mol·K)

T_{in} = 378.15 K

$$\dot{n} = 0.985 \cdot 0.7219 \cdot \frac{0.00456 \cdot 98836}{\sqrt{1 \cdot 0.0287805 \cdot 8.314472 \cdot 378.15}}$$

$\dot{n}$ = 33.690 mol/s

(2) To calculate the molar flow rate through one venturi or a combination of venturis, you may use its respective mean K_v and other constants you determined according to § 1065.640 and calculate its molar flow rate $\dot{n}$ during an emission test. Note that if you choose to follow the permissible ranges of dilution air dewpoint versus calibration air dewpoint in Table 3 of § 1065.640, you may set $M_{mix\text{-}cal}$ and M_{mix} equal to 1. Calculate $\dot{n}$ as follows:

$$\dot{n} = \frac{K_v \cdot p_{in}}{\sqrt{T_{in}}} \cdot \frac{p_{std}}{T_{std} \cdot R} \cdot \frac{\sqrt{M_{mix\text{-}cal}}}{\sqrt{M_{mix}}}$$

Eq. 1065.642-5

Where:

$$K_v = \frac{V_{stdref} \cdot \sqrt{T_{in\text{-}cal}}}{p_{in\text{-}cal}}$$

Eq. 1065.642-6

V_{stdref} = volumetric flow of the standard at reference conditions of 293.15 K and 101.325 kPa.

$T_{in\text{-}cal}$ = Venturi inlet temperature during calibration.

$P_{in\text{-}cal}$ = Venturi inlet pressure during calibration.

$M_{mix\text{-}cal}$ = Molar mass of gas mixture used during calibration.

M_{mix} = Molar mass of gas mixture during the emission test calculated using Equation 1065.640–9.

Example:

V_{stdref} = 0.4895 m³

$T_{in\text{-}cal}$ = 302.52 K

$P_{in\text{-}cal}$ = 99654 Pa

p_{in} = 98836 Pa

p_{std} = 101325 Pa

$M_{mix\text{-}cal}$ = 28.9656 g/mol = 0.0289656 kg/mol

M_{mix} = 28.7805 g/mol = 0.0287805 kg/mol

T_{in} = 353.15 K

T_{std} = 293.15 K

R = 8.314472 J/(mol·K)

$$K_v = \frac{0.4895 \cdot \sqrt{302.52}}{99654} = 0.000074954 \ \mathrm{m^4 \cdot s \cdot K^{0.5}/kg}$$

$$\dot{n} = \frac{0.000074954 \cdot 98936}{\sqrt{353.15}} \cdot \frac{101325}{293.15 \cdot 8.314472} \cdot \frac{\sqrt{0.0289656}}{\sqrt{0.0287805}}$$

$\dot{n}$ = 16.457 mol/s

■ 264. Section 1065.645 is amended by revising the introductory text and paragraph (a) and adding paragraph (d) to read as follows:

§ 1065.645 Amount of water in an ideal gas.

This section describes how to determine the amount of water in an ideal gas, which you need for various performance verifications and emission calculations. Use the equation for the vapor pressure of water in paragraph (a) of this section or another appropriate equation and, depending on whether you measure dewpoint or relative humidity, perform one of the calculations in paragraph (b) or (c) of this section. Paragraph (d) of this section provides an equation for determining dewpoint from relative humidity and dry bulb temperature measurements. The equations for the vapor pressure of water as presented in this section are derived from equations in ''Saturation Pressure of Water on the New Kelvin Temperature Scale'' (Goff, J.A., Transactions American Society of Heating and Air-Conditioning Engineers, Vol. 63, No. 1607, pages 347–354). Note that the equations were originally published to derive vapor pressure in units of atmospheres and

have been modified to derive results in units of kPa by converting the last term in each equation.

(a) *Vapor pressure of water.* Calculate the vapor pressure of water for a given saturation temperature condition, $T_{sat,}$ as follows, or use good engineering judgment to use a different relationship of the vapor pressure of water to a given saturation temperature condition:

(1) For humidity measurements made at ambient temperatures from (0 to 100) °C, or for humidity measurements made over super-cooled water at ambient temperatures from (−50 to 0) °C, use the following equation:

$$\log_{10}(p_{H2O}) = 10.79574 \cdot \left(1 - \frac{273.16}{T_{sat}}\right) - 5.02800 \cdot \log_{10}\left(\frac{T_{sat}}{273.16}\right) + 1.50475 \cdot 10^{-4} \cdot \left(1 - 10^{-8.2969 \cdot \left(\frac{T_{sat}}{273.16} - 1\right)}\right)$$
$$+0.42873 \cdot 10^{-3} \cdot \left(10^{4.76955 \cdot \left(1 - \frac{273.16}{T_{sat}}\right)} - 1\right) - 0.2138602$$

Eq. 1065.645-1

Where:

p_{H20} = vapor pressure of water at saturation temperature condition, kPa.

T_{sat} = saturation temperature of water at measured conditions, K.

Example:

T_{sat} = 9.5 °C = 282.65 K

$$\log_{10}(p_{H2O}) = 10.79574 \cdot \left(1 - \frac{273.16}{282.65}\right) - 5.02800 \cdot \log_{10}\left(\frac{282.65}{273.16}\right) + 1.50475 \cdot 10^{-4} \cdot \left(1 - 10^{-8.2969 \cdot \left(\frac{282.65}{273.16} - 1\right)}\right)$$
$$+0.42873 \cdot 10^{-3} \cdot \left(10^{4.76955 \cdot \left(1 - \frac{273.16}{282.65}\right)} - 1\right) - 0.2138602$$

$\log_{10}(p_{H20})$ = 0.074297

$p_{H20} = 10^{0.074297}$ = 1.186581 kPa

(2) For humidity measurements over ice at ambient temperatures from (–100 to 0) °C, use the following equation:

$$\log_{10}(p_{H2O}) = -9.096853 \cdot \left(\frac{273.16}{T_{sat}} - 1\right) - 3.566506 \cdot \log_{10}\left(\frac{273.16}{T_{sat}}\right)$$
$$+0.876812 \cdot \left(1 - \frac{T_{sat}}{273.16}\right) - 0.2138602$$

Eq. 1065.645-2

Example:

T_{ice} = −15.4 °C = 257.75 K

$$\log_{10}(p_{H2O}) = -9.096853 \cdot \left(\frac{273.16}{257.75} - 1\right) - 3.566506 \cdot \log_{10}\left(\frac{273.16}{257.75}\right)$$
$$+0.876812 \cdot \left(1 - \frac{257.75}{273.16}\right) - 0.2138602$$

$\log_{10}(p_{H20})$ = −0.798207

$p_{H20} = 10^{-0.79821}$ = 0.159145 kPa

* * * * *

(d) *Dewpoint determination from relative humidity and dry bulb temperature.* This paragraph (d) describes how to calculate dewpoint temperature from relative humidity, *RH* %. This is based on ''ITS–90 Formulations for Vapor Pressure, Frostpoint Temperature, Dewpoint Temperature, and Enhancement Factors in the Range –100 to +100 °C'' (Hardy, B., The Proceedings of the Third International Symposium on Humidity & Moisture, Teddington, London, England, April 1998). Calculate p_{H20sat} as described in paragraph (a) of this section based on setting T_{sat} equal to $T_{amb.}$ Calculate $p_{H20scaled}$ by multiplying p_{H20sat} by *RH* %. Calculate the

dewpoint, T_{dew}, from p_{H20} using the following equation:

$$T_{dew} = \frac{2.0798233 \cdot 10^{2} - 2.0156028 \cdot 10^{1} \cdot \ln\left(p_{H2O}\right) + 4.6778925 \cdot 10^{-1} \cdot \ln\left(p_{H2O}\right)^{2} - 9.2288067 \cdot 10^{-6} \cdot \ln\left(p_{H2O}\right)^{3}}{1 - 1.3319669 \cdot 10^{-1} \cdot \ln\left(p_{H2O}\right) + 5.6577518 \cdot 10^{-3} \cdot \ln\left(p_{H2O}\right)^{2} - 7.5172865 \cdot 10^{-5} \cdot \ln\left(p_{H2O}\right)^{3}}$$

Eq. 1065.645-5

Where:

In(p_{H20}) = the natural log of $p_{H2Oscaled}$, which is the water vapor pressure scaled to the relative humidity at the location of the relative humidity measurement, T_{sat} = T_{amb}.

Example:

RH % = 39.61%

T_{sat} = T_{amb} = 20.00 °C = 293.15K

Using Eq. 1065.645–1,

p_{H20sat} = 2.3371 kPa

$p_{H2Oscaled}$ = (39.61%□□□□□$_1$) = 0.925717 kPa = 925.717 Pa

$$T_{dew} = \frac{2.0798233 \cdot 10^{2} - 2.0156028 \cdot 10^{1} \cdot \ln\left(925.717\right) + 4.6778925 \cdot 10^{-1} \cdot \ln\left(925.717\right)^{2} - 9.2288067 \cdot 10^{-6} \cdot \ln\left(925.717\right)^{3}}{1 - 1.3319669 \cdot 10^{-1} \cdot \ln\left(925.717\right) + 5.6577518 \cdot 10^{-3} \cdot \ln\left(925.717\right)^{2} - 7.5172865 \cdot 10^{-5} \cdot \ln\left(925.717\right)^{3}}$$

T_{dew} = 279.00 K = 5.85 °C

■ 265. Section 1065.650 is amended by revising paragraph (c)(1) to read as follows:

§ 1065.650 Emission calculations.

* * * * *

(c) * * *

(1) *Concentration corrections.* Perform the following sequence of preliminary calculations on recorded concentrations:

(i) Correct all gaseous emission analyzer concentration readings, including continuous readings, sample bag readings, and dilution air background readings, for drift as described in § 1065.672. Note that you must omit this step where brake-specific emissions are calculated without the drift correction for performing the drift validation according to § 1065.550(b). When applying the initial THC and CH_4 contamination readings according to § 1065.520(f), use the same values for both sets of calculations. You may also use as-measured values in the initial set of calculations and corrected values in the drift-corrected set of calculations as described in § 1065.520(g)(7).

(ii) Correct all THC and CH_4 concentrations for initial contamination as described in § 1065.660(a), including continuous readings, sample bags readings, and dilution air background readings.

(iii) Correct all concentrations measured on a ''dry'' basis to a ''wet'' basis, including dilution air background concentrations, as described in § 1065.659.

(iv) Calculate all NMHC and CH_4 concentrations, including dilution air background concentrations, as described in § 1065.660.

(v) For emission testing with an oxygenated fuel, calculate any HC concentrations, including dilution air background concentrations, as described in § 1065.665. See subpart I of this part for testing with oxygenated fuels.

(vi) Correct all the NO_X concentrations, including dilution air background concentrations, for intake-air humidity as described in § 1065.670.

* * * * *

■ 266. Section 1065.655 is amended by revising paragraphs (c) introductory text, (c)(3), (d), (e), and (f)(2) to read as follows:

§ 1065.655 Chemical balances of fuel, intake air, and exhaust.

* * * * *

(c) *Chemical balance procedure.* The calculations for a chemical balance involve a system of equations that require iteration. We recommend using a computer to solve this system of equations. You must guess the initial values of up to three quantities: The amount of water in the measured flow, χ_{H2Oexh}, fraction of dilution air in diluted exhaust, $\chi_{dil/exh}$, and the amount of products on a C_1 basis per dry mole of dry measured flow, $\chi_{Ccombdry}$. You may use time-weighted mean values of combustion air humidity and dilution air humidity in the chemical balance; as long as your combustion air and dilution air humidities remain within tolerances of ±0.0025 mol/mol of their respective mean values over the test interval. For each emission concentration, χ, and amount of water, χ_{H2Oexh}, you must determine their completely dry concentrations, χ_{dry} and $\chi_{H2Oexhdry}$. You must also use your fuel's atomic hydrogen-to-carbon ratio, α, oxygen-to-carbon ratio, β, sulfur-to-carbon ratio, γ, and nitrogen-to-carbon ratio, δ. You may calculate α, β, γ, and δ based on measured fuel composition as described in paragraphs (d)(1) or (d)(2) of this section, or you may use default values for a given fuel as described in § 1065.655(d)(3). Use the following steps to complete a chemical balance:

* * * * *

(3) Use the following symbols and subscripts in the equations for this paragraph (c):

$\chi_{dil/exh}$ = amount of dilution gas or excess air per mole of exhaust.

χ_{H2Oexh} = amount of H_2O in exhaust per mole of exhaust.

$\chi_{Ccombdry}$ = amount of carbon from fuel in the exhaust per mole of dry exhaust.

χ_{H2dry} = amount of H_2 in exhaust per amount of dry exhaust.

K_{H2Ogas} = water-gas reaction equilibrium coefficient. You may use 3.5 or calculate your own value using good engineering judgment.

$\chi_{H2Oexhdry}$ = amount of H_2O in exhaust per dry mole of dry exhaust.

$\chi_{prod/intdry}$ = amount of dry stoichiometric products per dry mole of intake air.

$\chi_{dil/exhdry}$ = amount of dilution gas and/or excess air per mole of dry exhaust.

$\chi_{int/exhdry}$ = amount of intake air required to produce actual combustion products per mole of dry (raw or diluted) exhaust.

$\chi_{raw/exhdry}$ = amount of undiluted exhaust, without excess air, per mole of dry (raw or diluted) exhaust.

χ_{O2int} = amount of intake air O_2 per mole of intake air.

$\chi_{CO2intdry}$ = amount of intake air CO_2 per mole of dry intake air. You may use

$x_{CO2intdry}$ = 375 μmol/mol, but we recommend measuring the actual concentration in the intake air.

$\chi_{H2Ointdry}$ = amount of intake air H_2O per mole of dry intake air.

χ_{CO2int} = amount of intake air CO_2 per mole of intake air.

χ_{CO2dil} = amount of dilution gas CO_2 per mole of dilution gas.

$\chi_{CO2dildry}$ = amount of dilution gas CO_2 per mole of dry dilution gas. If you use air as diluent, you may use $x_{CO2dildry}$ = 375 μmol/mol, but we recommend measuring the actual concentration in the intake air.

$\chi_{H2Odildry}$ = amount of dilution gas H_2O per mole of dry dilution gas.

χ_{H2Odil} = amount of dilution gas H_2O per mole of dilution gas.

$\chi_{[emission]meas}$ = amount of measured emission in the sample at the respective gas analyzer.

$\chi_{[emission]dry}$ = amount of emission per dry mole of dry sample.

$\chi_{H2O[emission]meas}$ = amount of H_2O in sample at emission-detection location. Measure or estimate these values according to § 1065.145(e)(2).

χ_{H2Oint} = amount of H_2O in the intake air, based on a humidity measurement of intake air.

α = atomic hydrogen-to-carbon ratio of the mixture of fuel(s) being combusted, weighted by molar consumption.

β = atomic oxygen-to-carbon ratio of the mixture of fuel(s) being combusted, weighted by molar consumption.

γ = atomic sulfur-to-carbon ratio of the mixture of fuel(s) being combusted, weighted by molar consumption.

δ = atomic nitrogen-to-carbon ratio of the mixture of fuel(s) being combusted, weighted by molar consumption.

* * * * *

(d) *Carbon mass fraction and fuel composition.* Determine carbon mass fraction of fuel, w_c, and fuel composition represented by α, β, γ, and δ using one of the following methods:

(1) You may calculate w_c as described in this paragraph (d)(1) based on measured fuel properties. To do so, you must determine values for α and β in all cases, but you may set γ and δ to zero if the default value listed in Table 1 of this section is zero. Calculate w_c using the following equation:

$$w_c = \frac{1 \cdot M_C}{1 \cdot M_C + \alpha \cdot M_H + \beta \cdot M_O + \gamma \cdot M_S + \delta \cdot M_N}$$

Eq. 1065.655-19

Where:

w_c = carbon mass fraction of fuel.

M_C = molar mass of carbon.

α = atomic hydrogen-to-carbon ratio of the mixture of fuel(s) being combusted, weighted by molar consumption.

M_H = molar mass of hydrogen.

β = atomic oxygen-to-carbon ratio of the mixture of fuel(s) being combusted, weighted by molar consumption.

M_O = molar mass of oxygen.

γ = atomic sulfur-to-carbon ratio of the mixture of fuel(s) being combusted, weighted by molar consumption.

M_S = molar mass of sulfur.

δ = atomic nitrogen-to-carbon ratio of the mixture of fuel(s) being combusted, weighted by molar consumption.

M_N = molar mass of nitrogen.

Example:

α = 1.8

β = 0.05

γ = 0.0003

δ = 0.0001

M_C = 12.0107

M_H = 1.00794

M_O = 15.9994

M_S = 32.065

M_N = 14.0067

$$w_c = \frac{1 \cdot 12.0107}{1 \cdot 12.0107 + 1.8 \cdot 1.00794 + 0.05 \cdot 15.9994 + 0.0003 \cdot 32.065 + 0.0001 \cdot 14.0067}$$

$w_c = 0.8206$

(2) Determine a fuel's elemental mass fractions and values for α, β, γ, and δ as follows:

(i) For gaseous fuels, use the default values for α, β, γ, and δ in Table 1 of this section or use good engineering judgment to determine those values based on measurement.

(ii) Determine mass fractions for liquid fuels as follows:

(A) You may determine the fuel carbon and hydrogen mass fractions according to ASTM D5291 (incorporated by reference in § 1065.1010). When using ASTM D5291 to determine carbon and hydrogen mass fractions from gasoline (with or without blended ethanol), use good engineering judgment to adapt the method as appropriate.

(B) Determine oxygen mass fraction for gasoline (with or without blended ethanol) according to ASTM D5599 (incorporated by reference in § 1065.1010). For all other liquid fuels, determine the oxygen mass fraction using good engineering judgment.

(C) Determine the nitrogen mass fraction according to ASTM D4629 or ASTM D5762 (incorporated by reference in § 1065.1010) for all liquid fuels. Select the correct method based on the expected nitrogen content.

(D) Determine the sulfur mass fraction according to subpart H of this part.

(iii) For liquid fuels, use the default values for α, β, γ, and δ in Table 1 of this section, or you may determine the value for any of these parameters based on measurement. Calculate measured values using the following equations:

$$\alpha = \frac{w_H \cdot M_C}{w_C \cdot M_H}$$

Eq. 1065.655-20

$$\beta = \frac{w_O \cdot M_C}{w_C \cdot M_O}$$

Eq. 1065.655-21

$$\gamma = \frac{w_S \cdot M_C}{w_C \cdot M_S}$$

Eq. 1065.655-22

$$\delta = \frac{w_N \cdot M_C}{w_C \cdot M_N}$$

Eq. 1065.655-23

Where:

w_C = carbon mass fraction of fuel.
w_H = hydrogen mass fraction of fuel.
w_O = oxygen mass fraction of fuel.
w_S = sulfur mass fraction of fuel.
w_N = nitrogen mass fraction of fuel.

Example:

$w_C = 0.8206$

$w_H = 0.1239$

$w_O = 0.0547$

$w_S = 0.00066$

TABLE 1 OF § 1065.655—DEFAULT VALUES OF α, β, γ, δ, AND w_c, FOR VARIOUS FUELS

Fuel	Atomic hydrogen, oxygen, sulfur, and nitrogen-to-carbon ratios $CH_\alpha O_\beta S_\gamma N_\delta$	Carbon mass fraction, w_c g/g
Gasoline	$CH_{1.85}O_0S_0N_0$	0.866
E10 Gasoline	$CH_{1.92}O_{0.03}S_0N_0$	0.833
E15 Gasoline	$CH_{1.95}O_{0.05}S_0N_0$	0.817
E85 Gasoline	$CH_{2.73}O_{0.38}S_0N_0$	0.576
#1 Diesel	$CH_{1.93}O_0S_0N_0$	0.861
#2 Diesel	$CH_{1.80}O_0S_0N_0$	0.869
Liquefied petroleum gas	$CH_{2.64}O_0S_0N_0$	0.819
Natural gas	$CH_{3.78}O_{0.016}S_0N_0$	0.747
E100 Ethanol	$CH_3O_{0.5}S_0N_0$	0.521
M100 Methanol	$CH_4O_1S_0N_0$	0.375
Residual fuel blends	Must be determined by measured fuel properties as described in paragraph (d)(1) of this section.	

(e) *Calculated raw exhaust molar flow rate from measured intake air molar flow rate or fuel mass flow rate.* You may calculate the raw exhaust molar flow rate from which you sampled emissions, $\dot{n}_{exh}$, based on the measured intake air molar flow rate, $\dot{n}_{int}$, or the measured fuel mass flow rate, $\dot{m}_{fuel}$, and the values calculated using the chemical balance in paragraph (c) of this section. The chemical balance must be based on raw exhaust gas concentrations. Solve for the chemical balance in paragraph (c) of this section at the same frequency that you update and record $\dot{n}_{int}$ or $\dot{m}_{fuel}$.

For laboratory tests, calculating raw exhaust molar flow rate using measured fuel mass flow rate is valid only for steady-state testing. See § 1065.915(d)(5)(iv) for application to field testing.

(1) *Crankcase flow rate.* If engines are not subject to crankcase controls under the standard-setting part, you may calculate raw exhaust flow based on $\dot{n}_{int}$ or $\dot{m}_{fuel}$ using one of the following:

(i) You may measure flow rate through the crankcase vent and subtract it from the calculated exhaust flow.

(ii) You may estimate flow rate through the crankcase vent by engineering analysis as long as the uncertainty in your calculation does not adversely affect your ability to show that your engines comply with applicable emission standards.

(iii) You may assume your crankcase vent flow rate is zero.

(2) *Intake air molar flow rate calculation.* Calculate $\dot{n}_{exh}$ based on $\dot{n}_{int}$ using the following equation:

$$\dot{n}_{exh} = \frac{\dot{n}_{int}}{\left(1 + \frac{\left(x_{int/exhdry} - x_{raw/exhdry}\right)}{\left(1 + x_{H2Oexhdry}\right)}\right)}$$

Eq. 1065.655-24

Where:

$\dot{n}_{exh}$ = raw exhaust molar flow rate from which you measured emissions.

$\dot{n}_{int}$ = intake air molar flow rate including humidity in intake air.

Example:

$\chi\dot{n}_{int}$ = 3.780 mol/s

$\chi_{int/exhdry}$ = 0.69021 mol/mol

$\chi_{raw/exhdry}$ = 1.10764 mol/mol

$x_{H20exhdry}$ = 107.64 mmol/mol = 0.10764 mol/mol

$$\dot{n}_{exh} = \frac{3.780}{\left(1 + \frac{(0.69021 - 1.10764)}{(1 + 0.10764)}\right)}$$

$\dot{n}_{exh}$ = 6.066 mol/s

(3) *Fuel mass flow rate calculation.* This calculation may be used only for steady-state laboratory testing. See § 1065.915(d)(5)(iv) for application to field testing. Calculate $\dot{n}_{exh}$ based on $\dot{m}_{fuel}$ using the following equation:

$$\dot{n}_{exh} = \frac{\dot{m}_{fuel} \cdot w_c \cdot \left(1 + x_{H2Oexhdry}\right)}{M_c \cdot x_{Ccombdry}}$$

Eq. 1065.655-25

Where:

$\dot{n}_{exh}$ = raw exhaust molar flow rate from which you measured emissions.

$\dot{m}_{fuel}$ = fuel flow rate including humidity in intake air.

Example:

$\dot{m}_{fuel}$ = 7.559 g/s

w_c = 0.869 g/g

M_C = 12.0107 g/mol

$\chi_{Ccombdry}$ = 99.87 mmol/mol = 0.09987 mol/mol

$\chi_{H2Oexhdry}$ = 107.64 mmol/mol = 0.10764 mol/mol

$$\dot{n}_{exh} = \frac{7.559 \cdot 0.869 \cdot (1 + 0.10764)}{12.0107 \cdot 0.09987}$$

$\dot{n}_{exh}$ = 6.066 mol/s

(f) * * *

(2) *Dilute exhaust and intake air molar flow rate calculation.* Calculate $\dot{n}_{exh}$ as follows:

$$\dot{n}_{exh} = \left(x_{raw/exhdry} - x_{int/exhdry}\right) \cdot \left(1 - x_{H2Oexh}\right) \cdot \dot{n}_{dexh} + \dot{n}_{int}$$

Eq. 1065.655-26

Example:

$\dot{n}_{int}$ = 7.930 mol/s

$\chi_{raw/exhdry}$ = 0.1544 mol/mol

$\chi_{int/exhdry}$ = 0.1451 mol/mol

χ_{H2Oexh}32.46 mmol/mol = 0.03246 mol/mol

$\dot{n}_{dexh}$ = 49.02 mol/s

$\dot{n}_{exh}$ = (0.1544 − 0.1451)·(1 − 0.03246)·49.02 + 7.930 = 8.371 mol/s

■ 267. Section 1065.659 is amended by revising paragraph (a) to read as follows:

§ 1065.659 Removed water correction.

(a) If you remove water upstream of a concentration measurement, χ, correct for the removed water. Perform this correction based on the amount of water at the concentration measurement, $\chi_{H2O[emission]meas}$, and at the flow meter, χ_{H2Oexh}, whose flow is used to determine the mass emission rate or total mass over a test interval. For continuous analyzers downstream of a sample dryer for transient and ramped-modal cycles, you must apply this correction on a continuous basis over the test interval, even if you use one of the options in § 1065.145(e)(2) that results in a constant value for $x_{H2O[emission]meas}$ because x_{H2Oexh} varies over the test interval. For batch analyzers, determine the flow-weighted average based on the continuous x_{H2Oexh} values determined as described in paragraph (c) of this section. For batch analyzers, you may determine the flow-weighted average x_{H2Oexh} based on a single value of x_{H2Oexh} determined as described in paragraphs (c)(2) and (3) of this section, using flow-weighted average or batch concentration inputs.

* * * * *

■ 268. Section 1065.665 is revised to read as follows:

§ 1065.665 THCE and NMHCE determination.

(a) If you measured an oxygenated hydrocarbon's mass concentration, first calculate its molar concentration in the exhaust sample stream from which the sample was taken (raw or diluted exhaust), and convert this into a C_1-equivalent molar concentration. Add these C_1-equivalent molar concentrations to the molar concentration of non-oxygenated total hydrocarbon (NOTHC). The result is the molar concentration of total hydrocarbon equivalent (THCE). Calculate THCE concentration using the following equations, noting that Eq. 1065.665–3 is required only if you need to convert your oxygenated hydrocarbon (OHC) concentration from mass to moles:

$$x_{\mathrm{THCE}} = x_{\mathrm{NOTHC}} + \sum_{i=1}^{N}\left(x_{\mathrm{OHCi}} - x_{\mathrm{OHCi\text{-}init}}\right)$$

Eq. 1065.665-1

$$x_{\mathrm{NOTHC}} = x_{\mathrm{THC[THC\text{-}FID]cor}} - \sum_{i=1}^{N}\left(\left(x_{\mathrm{OHCi}} - x_{\mathrm{OHCi\text{-}init}}\right)\cdot RF_{\mathrm{OHCi[THC\text{-}FID]}}\right)$$

Eq. 1065.665-2

$$x_{\mathrm{OHCi}} = \frac{\dfrac{m_{\mathrm{dexhOHCi}}}{M_{\mathrm{OHCi}}}}{\dfrac{m_{\mathrm{dexh}}}{M_{\mathrm{dexh}}}} = \frac{n_{\mathrm{dexhOHCi}}}{n_{\mathrm{dexh}}}$$

Eq. 1065.665-3

Where:

χ_{THCE} = The sum of the C_1-equivalent concentrations of non-oxygenated hydrocarbons, alcohols, and aldehydes.

χ_{NOTHC} = The sum of the C_1-equivalent concentrations of NOTHC.

χ_{OHCi} = The C_1-equivalent concentration of oxygenated species *i* in diluted exhaust, not corrected for initial contamination.

$\chi_{\mathrm{OHCi\text{-}init}}$ = The C_1-equivalent concentration of the initial system contamination (optional) of oxygenated species *i,* dry-to-wet corrected.

$\chi_{\mathrm{THC[THC\text{–}FID]cor}}$ = The C_1-equivalent response to NOTHC and all OHC in diluted exhaust, HC contamination and dry-to-wet corrected, as measured by the THC–FID.

$RF_{\mathrm{OHCi[THC\text{–}FID]}}$ = The response factor of the FID to species *i* relative to propane on a C_1-equivalent basis.

$C^{num;}$ = the mean number of carbon atoms in the particular compound.

M_{dexh} = The molar mass of diluted exhaust as determine in § 1065.340.

m_{dexhOHCi} = The mass of oxygenated species *i* in dilute exhaust.

M_{OHCi} = The C_1-equivalent molecular weight of oxygenated species *i.*

m_{dexh} = The mass of diluted exhaust

n_{dexhOHCi} = The number of moles of oxygenated species *i* in total diluted exhaust flow.

n_{dexh} = The total diluted exhaust flow.

(b) If we require you to determine nonmethane hydrocarbon equivalent (NMHCE), use the following equation:

$$x_{\mathrm{NMHCE}} = x_{\mathrm{THCE}} - RF_{\mathrm{CH4[THC\text{-}FID]}}\cdot x_{\mathrm{CH4}}$$

Eq. 1065.665-4

Where:

χ_{NMHCE} = The sum of the C_1-equivalent concentrations of nonoxygenated nonmethane hydrocarbon (NONMHC), alcohols, and aldehydes.

$RF_{\mathrm{CH4[THC\text{–}FID]}}$ = response factor of THC–FID to CH_4.

χ_{CH4} = concentration of CH_4, HC contamination (optional) and dry-to-wet corrected, as measured by the gas chromatograph FID.

(c) The following example shows how to determine NMHCE emissions based on ethanol (C_2H_5OH), methanol (CH_3OH), acetaldehyde (C_2H_4O), and formaldehyde (HCHO) as C_1-equivalent molar concentrations:

$\chi_{\mathrm{THC[THC\text{–}FID]cor}}$ = 145.6 µmol/mol
χ_{CH4} = 18.9 µmol/mol
χ_{C2H5OH} = 100.8 µmol/mol
χ_{CH3OH} = 1.1 µmol/mol
χ_{C2H4O} = 19.1 µmol/mol
χ_{HCHO} = 1.3 µmol/mol
$RF_{\mathrm{CH4[THC\text{–}FID]}}$ = 1.07
$RF_{\mathrm{C2H5OH[THC\text{–}FID]}}$ = 0.76
$RF_{\mathrm{CH3OH[THC\text{–}FID]}}$ = 0.74
$RF_{\mathrm{H2H4O[THC\text{–}FID]}}$ = 0.50
$RF_{\mathrm{HCHO[THC\text{–}FID]}}$ = 0.0

$\chi_{\mathrm{NMHCE}} = \chi_{\mathrm{THC[THC\text{–}FID]cor}} - (\chi_{\mathrm{C2H5OH}}\cdot RF_{\mathrm{C2H5OH[THC\text{–}FID]}} + \chi_{\mathrm{CH3OH}}\cdot RF_{\mathrm{CH3OH[THC\text{–}FID]}} + \chi_{\mathrm{C2H4O}}\cdot RF_{\mathrm{C2H4O[THC\text{–}FID]}} + \chi_{\mathrm{HCHO}}\cdot RF_{\mathrm{HCHO[THC\text{–}FID]}}) + \chi_{\mathrm{C2H5OH}} + \chi_{\mathrm{CH3OH}} + \chi_{\mathrm{C2H4O}} + \chi_{\mathrm{HCHO}} - (RF_{\mathrm{CH4[THC\text{–}FID]}}\cdot \chi_{\mathrm{CH4}})$

$\chi_{\mathrm{NMHCE}} = 145.6 - (100.8\cdot 0.76 + 1.1\cdot 0.74 + 19.1\cdot 0.50 + 1.3\cdot 0) + 100.8 + 1.1 + 19.1 + 1.3 - (1.07\cdot 18.9)$

χ_{NMHCE} = 160.71 µmol/mol

■ 269. Section 1065.695 is amended by revising paragraph (c)(4)(i) and adding paragraph (c)(6)(x) to read as follows:

§ 1065.695 Data requirements.

* * * * *

(c) * * *

(4) * * *

(i) Linearity verification.

* * * * *

(6) * * *

(x) Number and type of preconditioning cycles.

* * * * *

Subpart H—[Amended]

■ 270. Section 1065.701 is amended by revising paragraphs (a), (d), and (f) to read as follows:

§ 1065.701 General requirements for test fuels.

(a) *General.* For all emission measurements, use test fuels that meet the specifications in this subpart, unless the standard-setting part directs otherwise. Section 1065.10(c)(1) does not apply with respect to test fuels. Note that the standard-setting parts generally require that you design your emission controls to function properly when

using commercially available fuels, even if they differ from the test fuel. Where we specify multiple grades of a certain fuel type (such as diesel fuel with different sulfur concentrations), see the standard-setting part to determine which grade to use.

* * * * *

(d) *Fuel specifications.* Specifications in this section apply as follows:

(1) Measure and calculate values as described in the appropriate reference procedure. Record and report final values expressed to at least the same number of decimal places as the applicable limit value. The right-most digit for each limit value is significant unless specified otherwise. For example, for a specified distillation temperature of 60 °C, determine the test fuel's value to the nearest whole number.

(2) The fuel parameters specified in this subpart depend on measurement procedures that are incorporated by reference. For any of these procedures, you may instead rely upon the procedures identified in 40 CFR part 80 for measuring the same parameter. For example, we may identify different reference procedures for measuring gasoline parameters in 40 CFR 80.46.

* * * * *

(f) *Service accumulation and field testing fuels.* If we do not specify a service-accumulation or field-testing fuel in the standard-setting part, use an appropriate commercially available fuel such as those meeting minimum specifications from the following table:

TABLE 1 OF § 1065.701—EXAMPLES OF SERVICE-ACCUMULATION AND FIELD-TESTING FUELS

Fuel category	Subcategory	Reference procedure [1]
Diesel	Light distillate and light blends with residual	ASTM D975
	Middle distillate	ASTM D6985
	Biodiesel (B100)	ASTM D6751
Intermediate and residual fuel	All	See § 1065.705
Gasoline	Motor vehicle gasoline	ASTM D4814
	Motor gasoline with ethanol concentrations up to 10 volume %	ASTM D4814
Alcohol	Ethanol (E51–83)	ASTM D5798
	Methanol (M70–M85)	ASTM D5797
Aviation fuel	Aviation gasoline	ASTM D910
	Gas turbine	ASTM D1655
	Jet B wide cut	ASTM D6615
Gas turbine fuel	General	ASTM D2880

[1] ASTM specifications are incorporated by reference in § 1065.1010.

■ 271. Section 1065.703 is amended by revising Table 1 to read as follows:

§ 1065.703 Distillate diesel fuel.

TABLE 1 OF § 1065.703—TEST FUEL SPECIFICATIONS FOR DISTILLATE DIESEL FUEL

Property	Unit	Ultra low sulfur	Low sulfur	High sulfur	Reference procedure [1]
Cetane Number		40–50	40–50	40–50	ASTM D613.
Distillation range:	°C.				
Initial boiling point		171–204	171–204	171–204	ASTM D86.
10 pct. point		204–238	204–238	204–238.	
50 pct. point		243–282	243–282	243–282.	
90 pct. point		293–332	293–332	293–332.	
Endpoint		321–366	321–366	321–366.	
Gravity	°API	32–37	32–37	32–37	ASTM D4052.
Total sulfur, ultra low sulfur	mg/kg	7–15			See 40 CFR 80.580.
Total sulfur, low and high sulfur	mg/kg		300–500	800–2500	ASTM D2622 or alternates as allowed under 40 CFR 80.580.
Aromatics, min. (Remainder shall be paraffins, naphthenes, and olefins).	g/kg	100	100	100	ASTM D5186.
Flashpoint, min.	°C	54	54	54	ASTM D93.
Kinematic Viscosity	cSt	2.0–3.2	2.0–3.2	2.0–3.2	ASTM D445.

[1] ASTM procedures are incorporated by reference in § 1065.1010. See § 1065.701(d) for other allowed procedures.

■ 272. Section 1065.710 is revised to read as follows:

§ 1065.710 Gasoline.

(a) This section specifies test fuel properties for gasoline with ethanol (low-level blend only) and for gasoline without ethanol. Note that the ''fuel type'' for the fuels specified in paragraphs (b) and (c) of this section is considered to be gasoline. In contrast, fuels with higher ethanol concentrations, such as fuel containing 82 percent ethanol, are considered to be ethanol fuels rather than gasoline. We specify some test fuel parameters that apply uniquely for low-temperature testing and for testing at altitudes above 1,219 m. For all other testing, use the test fuel parameters specified for general testing. Unless the standard-setting part specifies otherwise, use the fuel specified in paragraph (c) of this section for general testing.

(b) The following specifications apply for a blended gasoline test fuel that has nominally 15% ethanol (commonly called E15 test fuel):

(1) Prepare the blended test fuel from typical refinery gasoline blending

components. You may not use pure compounds, except as follows:

(i) You may use neat ethanol as a blendstock.

(ii) You may adjust the test fuel's vapor pressure by adding butane.

(iii) You may adjust the test fuel's benzene content by adding benzene.

(iv) You may adjust the test fuel's sulfur content by adding sulfur compounds that are representative of those found with in-use fuels.

(2) Table 1 of this section identifies limit values consistent with the units in the reference procedure for each fuel property. These values are generally specified in international units. Values presented in parentheses are for information only. Table 1 follows:

TABLE 1 OF § 1065.710—TEST FUEL SPECIFICATIONS FOR A LOW-LEVEL ETHANOL-GASOLINE BLEND

Property	Unit	Specification			Reference procedure [1]
		General testing	Low-temperature testing	High altitude testing	
Antiknock Index (R+M)/2		87.0—88.4 [2]		87.0 Minimum.	ASTM D2699 and D2700.
Sensitivity (R–M)		7.5 Minimum			ASTM D2699 and D2700.
Dry Vapor Pressure Equivalent (*DVPE*) [3]	kPa (psi)	60.0–63.4 (8.7–9.2)	77.2–81.4 (11.2–11.8)	52.4–55.2 (7.6–8.0)	ASTM D5191.
Distillation 10% evaporated	°C (°F)	49–60 (120–140)	43–54 (110–130)	49–60 (120–140)	ASTM D86.
50% evaporated	°C (°F)	77–88 (170–190)			
90% evaporated	°C (°F)	154–166 (310–330)			
Evaporated final boiling point	°C (°F)	193–216 (380–420)			
Residue	milliliter	2.0 Maximum			ASTM D5769.
Total Aromatic Hydrocarbons	volume %	19.5–24.5			
C6 Aromatics (benzene)	volume %	0.6–0.8			
C7 Aromatics (toluene)	volume %	4.4–5.5			
C8 Aromatics	volume %	5.5–6.9			
C9 Aromatics	volume %	5.0–6.2			
C10+ Aromatics	volume %	4.0–5.0			
Olefins [4]	mass %	4.5–11.5			ASTM D6550.
Ethanol blended [5]	volume %	14.6–15.0			See paragraph (b)(3) of this section.
Ethanol confirmatory [6] [7]	volume %	14.3–15.3			ASTM D5599.
Total Content of Oxygenates Other than Ethanol [7].	volume %	0.1 Maximum			ASTM D5599.
Sulfur	mg/kg	8.0–11.0			ASTM D2622, D5453 or D7039.
Lead	g/liter	0.0026 Maximum			ASTM D3237.
Phosphorus	g/liter	0.0013 Maximum			ASTM D3231.
Copper Corrosion		No. 1 Maximum			ASTM D130.
Solvent-Washed Gum Content	mg/100 milliliter	3.0 Maximum			ASTM D381.
Oxidation Stability	minute	1000 Minimum			ASTM D525.

[1] ASTM procedures are incorporated by reference in § 1065.1010. See § 1065.701(d) for other allowed procedures.

[2] Octane specifications apply only for testing related to exhaust emissions. For engines or vehicles that require the use of premium fuel, as described in paragraph (d) of this section, the adjusted specification for antiknock index is a minimum value of 91.0; no maximum value applies. All other specifications apply for this high-octane fuel.

[3] Calculate dry vapor pressure equivalent, *DVPE,* based on the measured total vapor pressure, p_T, in kPa using the following equation: $DVPE = 0.956 \cdot p_T - 2.39$. *DVPE* is intended to be equivalent to Reid Vapor Pressure using a different test method.

[4] The specified olefin concentration range equates to approximately 4–10 volume % when measured according to ASTM D1319.

[5] The ethanol blended specification is based on the volume % ethanol content of the fuel as determined during blending by the fuel supplier and as stated by the supplier at the time of fuel delivery.

[6] The ethanol confirmatory specification is based on the volume % ethanol as measured according to ASTM D5599.

[7] The reference procedure prescribes measurement of ethanol concentration in mass %. Convert results to volume % as specified in ASTM D4815.

(3) Use good engineering judgment to determine the volume % of ethanol based on the volume of each blendstock. We recommend using a flow-based or gravimetric procedure that has an accuracy and repeatability of ±0.1%.

(c) The specifications of this paragraph (c) apply for testing with neat gasoline. This is sometimes called indolene or E0 test fuel. Gasoline for testing must have octane values that represent commercially available fuels for the appropriate application. Test fuel specifications apply as follows:

TABLE 2 OF § 1065.710—TEST FUEL SPECIFICATIONS FOR NEAT (E0) GASOLINE

Property	Unit	Specification		Reference Procedure [1]
		General testing	Low-temperature testing	
Distillation Range	°C			ASTM D86
Evaporated initial boiling point		24–35 2	24–36..	
10% evaporated		49–57	37–48..	
50% evaporated		93–110	82–101..	
90% evaporated		149–163	158–174..	
Evaporated final boiling point		Maximum, 213	Maximum, 212..	
Hydrocarbon composition	volume %			ASTM D1319
Olefins		Maximum, 0.10	Maximum, 0.175..	
Aromatics		Maximum, 0.35	Maximum, 0.304..	
Saturates		Remainder	Remainder.	
Lead	g/liter	Maximum, 0.013	Maximum, 0.013.	ASTM D3237
Phosphorous	g/liter	Maximum, 0.0013	Maximum, 0.005.	ASTM D3231
Total sulfur	mg/kg	Maximum, 80	Maximum, 80.	ASTM D2622
Dry vapor pressure equivalent [2].	kPa	60.0–63.4 [3, 4]	77.2–81.4.	ASTM D5191

[1] ASTM procedures are incorporated by reference in § 1065.1010. See § 1065.701(d) for other allowed procedures.
[2] Calculate dry vapor pressure equivalent, *DVPE,* based on the measured total vapor pressure, p_T, in kPa using the following equation: $DVPE = 0.956 \cdot p_T - 2.39$. *DVPE* is intended to be equivalent to Reid Vapor Pressure using a different test method.
[3] For testing at altitudes above 1 219 m, the specified volatility range is (52.0 to 55.2) kPa and the specified initial boiling point range is (23.9 to 40.6) °C.
[4] For testing unrelated to evaporative emissions, the specified range is (55.2 to 63.4) kPa.

(d) Use the high-octane gasoline specified in paragraph (b) of this section only for engines or vehicles for which the manufacturer conditions the warranty on the use of premium gasoline.

■ 273. Section 1065.715 is amended by revising paragraph (a) to read as follows:

§ 1065.715 Natural gas.

(a) Except as specified in paragraph (b) of this section, natural gas for testing must meet the specifications in the following table:

TABLE 1 OF § 1065.715—TEST FUEL SPECIFICATIONS FOR NATURAL GAS

Property	Value [1]
Methane, CH_4	Minimum, 0.87 mol/mol.
Ethane, C_2H_6	Maximum, 0.055 mol/mol.
Propane, C_3H_8	Maximum, 0.012 mol/mol.
Butane, C_4H_{10}	Maximum, 0.0035 mol/mol.
Pentane, C_5H_{12}	Maximum, 0.0013 mol/mol.
C_6 and higher	Maximum, 0.001 mol/mol.
Oxygen	Maximum, 0.001 mol/mol.
Inert gases (sum of CO_2 and N_2)	Maximum, 0.051 mol/mol.

[1] Demonstrate compliance with fuel specifications based on the reference procedures in ASTM D1945 (incorporated by reference in § 1065.1010), or on other measurement procedures using good engineering judgment. See § 1065.701(d) for other allowed procedures.

* * * * *

■ 274. Section 1065.720 is amended by revising paragraph (a) to read as follows:

§ 1065.720 Liquefied petroleum gas.

(a) Except as specified in paragraph (b) of this section, liquefied petroleum gas for testing must meet the specifications in the following table:

TABLE 1 OF § 1065.720—TEST FUEL SPECIFICATIONS FOR LIQUEFIED PETROLEUM GAS

Property	Value	Reference procedure [1]
Propane, C_3H_8	Minimum, 0.85 m^3/m^3	ASTM D2163
Vapor pressure at 38 °C	Maximum, 1400 kPa	ASTM D1267 or 2598 [2]
Volatility residue (evaporated temperature, 35 °C)	Maximum, −38 °C	ASTM D1837
Butanes	Maximum, 0.05 m^3/m^3	ASTM D2163
Butenes	Maximum, 0.02 m^3/m^3	ASTM D2163
Pentenes and heavier	Maximum, 0.005 m^3/m^3	ASTM D2163
Propene	Maximum, 0.1 m^3/m^3	ASTM D2163
Residual matter (residue on evap. of 100) ml oil stain observ.)	Maximum, 0.05 ml pass [3]	ASTM D2158
Corrosion, copper strip	Maximum, No. 1	ASTM D1838
Sulfur	Maximum, 80 mg/kg	ASTM D2784
Moisture content	pass	ASTM D2713

[1] ASTM procedures are incorporated by reference in § 1065.1010. See § 1065.701(d) for other allowed procedures.
[2] If these two test methods yield different results, use the results from ASTM D1267.
[3] The test fuel must not yield a persistent oil ring when you add 0.3 ml of solvent residue mixture to a filter paper in 0.1 ml increments and examine it in daylight after two minutes.

* * * * *

■ 275. A new § 1065.725 is added to subpart H to read as follows:

§ 1065.725 High-level ethanol-gasoline blends.

For testing ethanol-fueled vehicles, create a high-level ethanol-gasoline blend test fuel as follows:

(a) Add ethanol to an E15 fuel meeting the specifications described in § 1065.710 until the ethanol content of the blended fuel is between 80 and 83 volume %.

(b) You may alternatively add ethanol to a gasoline base fuel with no ethanol if you can demonstrate that such a base fuel blended with the proper amount of ethanol would meet all the specifications for E15 test fuel described in § 1065.710, other than the ethanol content.

(c) The ethanol used for blending must be either denatured ethanol meeting the specifications in 40 CFR 80.1510, or fuel-grade ethanol with no denaturant. Be sure to account for the volume of any denaturant when calculating volumetric percentages.

(d) The blended test fuel must have a dry vapor pressure equivalent between 6.0 and 6.5 when measured using the procedure specified in § 1065.710. You may add commercial grade butane as needed to meet this specification.

■ 276. Section 1065.750 is amended by revising the introductory text and paragraphs (a)(1), (a)(2), (a)(3), and (a)(5) to read as follows:

§ 1065.750 Analytical gases.

Analytical gases must meet the accuracy and purity specifications of this section, unless you can show that other specifications would not affect your ability to show that you comply with all applicable emission standards.

(a) * * *

(1) Use purified gases to zero measurement instruments and to blend with calibration gases. Use gases with contamination no higher than the highest of the following values in the gas cylinder or at the outlet of a zero-gas generator:

(i) 2% contamination, measured relative to the flow-weighted mean concentration expected at the standard. For example, if you would expect a flow-weighted CO concentration of 100.0 µmol/mol, then you would be allowed to use a zero gas with CO contamination less than or equal to 2.000 µmol/mol.

(ii) Contamination as specified in the following table:

TABLE 1 OF § 1065.750—GENERAL SPECIFICATIONS FOR PURIFIED GASES [1]

Constituent	Purified air	Purified N_2
THC (C_1 equivalent)	≤ 0.05 µmol/mol	≤ 0.05 µmol/mol
CO	≤ 1 µmol/mol	≤ 1 µmol/mol
CO_2	≤ 10 µmol/mol	≤ 10 µmol/mol
O_2	0.205 to 0.215 mol/mol	≤ 2 µmol/mol
NO_X	≤ 0.02 µmol/mol	≤ 0.02 µmol/mol
N_2O [2]	≤ 0.02 µmol/mol	≤ 0.02 µmol/mol

[1] We do not require these levels of purity to be NIST-traceable.
[2] The N_2O limit applies only if the standard-setting part requires you to report N_2O or certify to an N_2O standard.

(2) Use the following gases with a FID analyzer:

(i) *FID fuel.* Use FID fuel with a stated H_2 concentration of (0.39 to 0.41) mol/mol, balance He or N_2, and a stated total hydrocarbon concentration of 0.05 µmol/mol or less. For GC–FIDs that measure methane (CH_4) using a FID fuel that is balance N_2, perform the CH_4 measurement as described in SAE J1151 (incorporated by reference in § 1065.1010).

(ii) *FID burner air.* Use FID burner air that meets the specifications of purified air in paragraph (a)(1) of this section. For field testing, you may use ambient air.

(iii) *FID zero gas.* Zero flame-ionization detectors with purified gas that meets the specifications in paragraph (a)(1) of this section, except that the purified gas O_2 concentration may be any value. Note that FID zero balance gases may be any combination of purified air and purified nitrogen. We recommend FID analyzer zero gases that contain approximately the expected flow-weighted mean concentration of O_2 in the exhaust sample during testing.

(iv) *FID propane span gas.* Span and calibrate THC FID with span concentrations of propane, C_3H_8. Calibrate on a carbon number basis of one (C_1). For example, if you use a C_3H_8 span gas of concentration 200 µmol/mol, span a FID to respond with a value of 600 µmol/mol. Note that FID span balance gases may be any combination of purified air and purified nitrogen. We recommend FID analyzer span gases that contain approximately the flow-weighted mean concentration of O_2 expected during testing. If the expected O_2 concentration in the exhaust sample is zero, we recommend using a balance gas of purified nitrogen.

(v) *FID CH_4 span gas.* If you always span and calibrate a CH_4 FID with a nonmethane cutter, then span and calibrate the FID with span concentrations of CH_4. Calibrate on a carbon number basis of one (C_1). For example, if you use a CH_4 span gas of concentration 200 µmol/mol, span a FID to respond with a value of 200 µmol/mol. Note that FID span balance gases may be any combination of purified air and purified nitrogen. We recommend FID analyzer span gases that contain approximately the expected flow-weighted mean concentration of O_2 in the exhaust sample during testing. If the expected O_2 concentration in the exhaust sample is zero, we recommend using a balance gas of purified nitrogen.

(3) Use the following gas mixtures, with gases traceable within ±1% of the NIST-accepted value or other gas standards we approve:

(i) CH_4, balance purified air and/or N_2 (as applicable).

(ii) C_2H_6, balance purified air and/or N_2 (as applicable).

(iii) C_3H_8, balance purified air and/or N_2 (as applicable).

(iv) CO, balance purified N_2.

(v) CO_2, balance purified N_2.

(vi) NO, balance purified N_2.

(vii)) NO_2, balance purified air.

(viii) O_2, balance purified N_2.

(ix) C_3H_8, CO, CO_2, NO, balance purified N_2.

(x) C_3H_8, CH_4, CO, CO_2, NO, balance purified N_2.

(xi) N_2O, balance purified air and/or N_2 (as applicable).

* * * * *

(5) You may generate your own calibration gases using a precision blending device, such as a gas divider, to dilute gases with purified N_2 or purified air. If your gas divider meets the specifications in § 1065.248, and the gases being blended meet the requirements of paragraphs (a)(1) and (3) of this section, the resulting blends

are considered to meet the requirements of this paragraph (a).

* * * * *

Subpart I—[Amended]

■ 277. Section 1065.805 is amended by revising paragraphs (d) and (f) to read as follows:

§ 1065.805 Sampling system.

* * * * *

(d) You may bubble a sample of the exhaust through water to collect alcohols for later analysis. You may also use a photo-acoustic analyzer to quantify ethanol and methanol in an exhaust sample as described in § 1065.269.

* * * * *

(f) You may sample alcohols or carbonyls using ''California Non-Methane Organic Gas Test Procedures'' (incorporated by reference in § 1065.1010). If you use this method, follow its calculations to determine the mass of the alcohol/carbonyl in the exhaust sample, but follow subpart G of this part for all other calculations (40 CFR part 1066, subpart G, for vehicle testing).

* * * * *

■ 278. Section 1065.845 is amended by revising the introductory text, redesignating paragraphs (a) and (b) as paragraphs (b) and (c), respectively, and adding a new paragraph (a) to read as follows:

§ 1065.845 Response factor determination.

Since FID analyzers generally have an incomplete response to alcohols and carbonyls, determine each FID analyzer's alcohol/carbonyl response factor (such as RF_{MeOH}) after FID optimization to subtract those responses from the FID reading. Use the most recently determined alcohol/carbonyl response factors to compensate for alcohol/carbonyl response. You are not required to determine the response factor for a compound unless you will subtract its response to compensate for a response.

(a) You may generate response factors as described in paragraph (b) of this section, or you may use the following default response factors, consistent with good engineering judgment:

TABLE 1 OF § 1065.665—DEFAULT VALUES FOR THC FID RESPONSE FACTOR RELATIVE TO PROPANE ON A C_1-EQUIVALENT BASIS

Compound	Response factor (*RF*)
acetaldehyde	0.50
ethanol	0.75
formaldehyde	0.00
methanol	0.63
propanol	0.85

* * * * *

■ 279. Section 1065.850 is revised to read as follows:

§ 1065.850 Calculations.

Use the calculations specified in § 1065.665 to determine THCE or NMHCE and the calculations specified in 40 CFR 1066.665 to determine NMOG.

Subpart K—[Amended]

■ 280. Section 1065.1001 is amended by removing the definition for ''Engine'' and revising the definitions for ''C_1 equivalent (or basis)'', ''Oxygenated fuels'', and ''Precision'' to read as follows:

§ 1065.1001 Definitions.

* * * * *

C_1 equivalent (or basis) means a convention of expressing HC concentrations based on the total number of carbon atoms present, such that the C_1 equivalent of a molar HC concentration equals the molar concentration multiplied by the mean number of carbon atoms in each HC molecule. For example, the C_1 equivalent of 10 μmol/mol of propane (C_3H_8) is 30 μmol/mol. C_1 equivalent molar values may be denoted as ''ppmC'' in the standard-setting part. Molar mass may also be expressed on a C_1 basis. Note that calculating HC masses from molar concentrations and molar masses is only valid where they are each expressed on the same carbon basis.

* * * * *

Oxygenated fuels means fuels composed of at least 25% oxygen-containing compounds, such as ethanol or methanol. Testing engines that use oxygenated fuels generally requires the use of the sampling methods in subpart I of this part. However, you should read the standard-setting part and subpart I of this part to determine appropriate sampling methods.

* * * * *

Precision means two times the standard deviation of a set of measured values of a single zero or reference quantity. See also the related definitions of *noise* and *repeatability* in this section.

* * * * *

■ 281. Section 1065.1005 is amended by revising paragraphs (a) and (f)(2) to read as follows:

§ 1065.1005 Symbols, abbreviations, acronyms, and units of measure.

* * * * *

(a) *Symbols for quantities.* This part uses the following symbols and units of measure for various quantities:

Symbol	Quantity	Unit	Unit symbol	Units in terms of SI base units
α	atomic hydrogen to carbon ratio	mole per mole	mol/mol	1
A	area	square meter	m^2	m^2
A_0	intercept of least squares regression.			
A_1	slope of least squares regression.			
β	ratio of diameters	meter per meter	m/m	1
β	atomic oxygen to carbon ratio	mole per mole	mol/mol	1
$C_\#$	number of carbon atoms in a molecule.			
d	Diameter	meter	m	m
DR	dilution ratio	mole per mol	mol/mol	1
ε	error between a quantity and its reference.			
e	brake-specific emission or fuel consumption.	gram per kilowatt hour	g/(kW·hr)	$g \cdot 3.6^{-1} \cdot 10^6 \cdot m^{-2} \cdot kg \cdot s^2$
F	F-test statistic.			
f	frequency	hertz	Hz	s^{-1}
f_n	angular speed (shaft)	revolutions per minute	r/min	$2 \cdot \pi \cdot 60^{-1} \cdot m \cdot m^{-1} \cdot s^{-1}$

Symbol	Quantity	Unit	Unit symbol	Units in terms of SI base units
γ	ratio of specific heats	(joule per kilogram kelvin) per (joule per kilogram kelvin).	(J/(kg·K))/(J/(kg·K))	1
K	correction factor	1.		
K_v	calibration coefficient		$m^4 \cdot s \cdot K^{0.5}/kg$	$m^4 \cdot s \cdot K^{0.5} \cdot kg^{-1}$
l	length	meter	m	m
μ	viscosity, dynamic	pascal second	Pa·s	$m^{-1} \cdot kg \cdot s^{-1}$
M	molar mass[1]	gram per mole	g/mol	$10^{-3} \cdot kg \cdot mol^{-1}$
m	mass	kilogram	kg	kg
$\dot{m}$	mass rate	kilogram per second	kg/s	$kg \cdot s^{-1}$
ν	viscosity, kinematic	meter squared per second	m^2/s	$m^2 \cdot s^{-1}$
N	total number in series.			
n	amount of substance	mole	mol	mol
$\dot{n}$	amount of substance rate	mole per second	mol/s	$mol \cdot s^{-1}$
P	power	kilowatt	kW	$10^3 \cdot m^2 \cdot kg \cdot s^{-3}$
PF	penetration fraction.			
p	pressure	pascal	Pa	$m^{-1} \cdot kg \cdot s^{-2}$
ρ	mass density	kilogram per cubic meter	kg/m^3	$kg \cdot m^{-3}$
r	ratio of pressures	pascal per pascal	Pa/Pa	1
R^2	coefficient of determination.			
Ra	average surface roughness	micrometer	µm	10^{-6} m
$Re^{\#}$	Reynolds number.			
RF	response factor.			
RH	relative humidity.			
σ	non-biased standard deviation.			
S	Sutherland constant	kelvin	K	K
SEE	standard estimate of error.			
T	absolute temperature	kelvin	K	K
T	Celsius temperature	degree Celsius	°C	K-273.15
T	torque (moment of force)	newton meter	N·m	$m^2 \cdot kg \cdot s^{-2}$
t	time	second	s	s
Δt	time interval, period, 1/frequency	second	s	s
V	volume	cubic meter	m^3	m^3
$\dot{V}$	volume rate	cubic meter per second	m^3/s	$m^3 \cdot s^{-1}$
W	work	kilowatt hour	kW·hr	$3.6 \cdot 10^{-6} \cdot m^2 \cdot kg \cdot s^{-2}$
w_c	carbon mass fraction	gram per gram	g/g	1
x	amount of substance mole fraction[2]	mole per mole	mol/mol	1
$\bar{x}$	flow-weighted mean concentration	mole per mole	mol/mol	1
y	generic variable.			

[1] See paragraph (f)(2) of this section for the values to use for molar masses. Note that in the cases of NO_X and HC, the regulations specify effective molar masses based on assumed speciation rather than actual speciation.

[2] Note that mole fractions for THC, THCE, NMHC, NMHCE, and NOTHC are expressed on a C_1 equivalent basis.

* * * * *

(f) * * *

(2) This part uses the following molar masses or effective molar masses of chemical species:

Symbol	Quantity	g/mol ($10^{-3} \cdot kg \cdot mol^{-1}$)
M_{air}	molar mass of dry air[1]	28.96559
M_{Ar}	molar mass of argon	39.948
M_C	molar mass of carbon	12.0107
M_{CH3OH}	molar mass of methanol	32.04186
M_{C2H5OH}	molar mass of ethanol	46.06844
M_{C2H4O}	molar mass of acetaldehyde	44.05256
M_{C3H8}	molar mass of propane	44.09562
M_{C3H7OH}	molar mass of propanol	60.09502
M_{CO}	molar mass of carbon monoxide	28.0101
M_{CH4}	molar mass of methane	16.0425
M_{CO2}	molar mass of carbon dioxide	44.0095
M_H	molar mass of atomic hydrogen	1.00794
M_{H2}	molar mass of molecular hydrogen	2.01588
M_{H2O}	molar mass of water	18.01528
M_{HCHO}	molar mass of formaldehyde	30.02598
M_{He}	molar mass of helium	4.002602
M_N	molar mass of atomic nitrogen	14.0067
M_{N2}	molar mass of molecular nitrogen	28.0134
M_{NH3}	molar mass of ammonia	17.03052

Symbol	Quantity	g/mol (10^{-3}·kg·mol^{-1})
M_{NMHC}	effective C_1 molar mass of nonmethane hydrocarbon [2]	13.875389
M_{NMHCE}	effective C_1 molar mass of nonmethane hydrocarbon equivalent [2]	13.875389
M_{NOx}	effective molar mass of oxides of nitrogen [3]	46.0055
M_{N2O}	molar mass of nitrous oxide	44.0128
M_O	molar mass of atomic oxygen	15.9994
M_{O2}	molar mass of molecular oxygen	31.9988
M_S	molar mass of sulfur	32.065
M_{THC}	effective C_1 molar mass of total hydrocarbon [2]	13.875389
M_{THCE}	effective C_1 molar mass of total hydrocarbon equivalent [2]	13.875389

[1] See paragraph (f)(1) of this section for the composition of dry air.
[2] The effective molar masses of THC, THCE, NMHC, and NMHCE are defined on a C_1 basis and are based on an atomic hydrogen-to-carbon ratio, α, of 1.85 (with β, γ, and δ equal to zero).
[3] The effective molar mass of NO_X is defined by the molar mass of nitrogen dioxide, NO_2.

* * * * *

■ 282. Section 1065.1010 is amended by revising paragraphs (a) and (f) to read as follows:

§ 1065.1010 Reference materials.

* * * * *

(a) *ASTM materials.* Copies of these materials may be obtained from ASTM International, 100 Barr Harbor Dr., P.O. Box C700, West Conshohocken, PA 19428–2959, or by calling (877) 909–ASTM, or at *http://www.astm.org.*

(1) ASTM D86–11b, Standard Test Method for Distillation of Petroleum Products at Atmospheric Pressure, IBR approved for §§ 1065.703, 1065.710.

(2) ASTM D93–12, Standard Test Methods for Flash Point by Pensky-Martens Closed Cup Tester, IBR approved for § 1065.703.

(3) ASTM D445–12, Standard Test Method for Kinematic Viscosity of Transparent and Opaque Liquids (and Calculation of Dynamic Viscosity), IBR approved for § 1065.703.

(4) ASTM D613–10a, Standard Test Method for Cetane Number of Diesel Fuel Oil, IBR approved for § 1065.703.

(5) ASTM D910–11, Standard Specification for Aviation Gasolines, IBR approved for § 1065.701.

(6) ASTM D975–12a, Standard Specification for Diesel Fuel Oils, IBR approved for § 1065.701.

(7) ASTM D1267–02 (Reapproved 2007), Standard Test Method for Gage Vapor Pressure of Liquefied Petroleum (LP) Gases (LP-Gas Method), IBR approved for § 1065.720.

(8) ASTM D1319–10, Standard Test Method for Hydrocarbon Types in Liquid Petroleum Products by Fluorescent Indicator Adsorption, IBR approved for § 1065.710.

(9) ASTM D1655–12, Standard Specification for Aviation Turbine Fuels, IBR approved for § 1065.701.

(10) ASTM D1837–11, Standard Test Method for Volatility of Liquefied Petroleum (LP) Gases, IBR approved for § 1065.720.

(11) ASTM D1838–12, Standard Test Method for Copper Strip Corrosion by Liquefied Petroleum (LP) Gases, IBR approved for § 1065.720.

(12) ASTM D1945–03 (Reapproved 2010), Standard Test Method for Analysis of Natural Gas by Gas Chromatography, IBR approved for § 1065.715.

(13) ASTM D2158–11, Standard Test Method for Residues in Liquefied Petroleum (LP) Gases, IBR approved for § 1065.720.

(14) ASTM D2163–07, Standard Test Method for Analysis of Liquefied Petroleum (LP) Gases and Propene Concentrates by Gas Chromatography, IBR approved for § 1065.720.

(15) ASTM D2598–02 (Reapproved 2007), Standard Practice for Calculation of Certain Physical Properties of Liquefied Petroleum (LP) Gases from Compositional Analysis, IBR approved for § 1065.720.

(16) ASTM D2622–10, Standard Test Method for Sulfur in Petroleum Products by Wavelength Dispersive X-ray Fluorescence Spectrometry, IBR approved for §§ 1065.703, 1065.710.

(17) ASTM D2713–12, Standard Test Method for Dryness of Propane (Valve Freeze Method), IBR approved for § 1065.720.

(18) ASTM D2784–11, Standard Test Method for Sulfur in Liquefied Petroleum Gases (Oxy-Hydrogen Burner or Lamp), IBR approved for § 1065.720.

(19) ASTM D2880–03 (Reapproved 2010), Standard Specification for Gas Turbine Fuel Oils, IBR approved for § 1065.701.

(20) ASTM D2986–95a (Reapproved 1999), Standard Practice for Evaluation of Air Assay Media by the Monodisperse DOP (Dioctyl Phthalate) Smoke Test, IBR approved for § 1065.170.

(21) ASTM D3231–11, Standard Test Method for Phosphorus in Gasoline, IBR approved for § 1065.710.

(22) ASTM D3237–12, Standard Test Method for Lead in Gasoline By Atomic Absorption Spectroscopy, IBR approved for § 1065.710.

(23) ASTM D4052–11, Standard Test Method for Density and Relative Density of Liquids by Digital Density Meter, IBR approved for § 1065.703.

(24) ASTM D4629–12, Standard Test Method for Trace Nitrogen in Liquid Petroleum Hydrocarbons by Syringe/Inlet Oxidative Combustion and Chemiluminescence Detection, IBR approved for § 1065.655.

(25) ASTM D4814–11b, Standard Specification for Automotive Spark-Ignition Engine Fuel, IBR approved for § 1065.701.

(26) ASTM D4815–09, Standard Test Method for Determination of MTBE, ETBE, TAME, DIPE, tertiary-Amyl Alcohol and C_1 to C_4 Alcohols in Gasoline by Gas Chromatography, IBR approved for § 1065.710.

(27) ASTM D5186–03 (Reapproved 2009), Standard Test Method for Determination of the Aromatic Content and Polynuclear Aromatic Content of Diesel Fuels and Aviation Turbine Fuels By Supercritical Fluid Chromatography, IBR approved for § 1065.703.

(28) ASTM D5191–12, Standard Test Method for Vapor Pressure of Petroleum Products (Mini Method), IBR approved for § 1065.710.

(29) ASTM D5291–10, Standard Test Method for Instrumental Determination of Carbon, Hydrogen, and Nitrogen in Petroleum Products and Lubricants, IBR approved for § 1065.655.

(30) ASTM D5599–00 (Reapproved 2010), Standard Test Method for Determination of Oxygenates in Gasoline by Gas Chromatography and Oxygen Selective Flame Ionization Detection, IBR approved for § 1065.655.

(31) ASTM D5762–12, Standard Test Method for Nitrogen in Petroleum and

Petroleum Products by Boat-Inlet Chemiluminescence, IBR approved for § 1065.655.

(32) ASTM D5797–07, Standard Specification for Fuel Methanol (M70–M85) for Automotive Spark-Ignition Engines, IBR approved for § 1065.701.

(33) ASTM D5798–11, Standard Specification for Fuel Ethanol (Ed75–Ed85) for Automotive Spark-Ignition Engines, IBR approved for § 1065.701.

(34) ASTM D6615–11a, Standard Specification for Jet B Wide-Cut Aviation Turbine Fuel, IBR approved for § 1065.701.

(35) ASTM D6751–12, Standard Specification for Biodiesel Fuel Blend Stock (B100) for Middle Distillate Fuels, IBR approved for § 1065.701.

(36) ASTM D6985–04a, Standard Specification for Middle Distillate Fuel Oil—Military Marine Applications, IBR approved for § 1065.701.

(37) ASTM F1471–09, Standard Test Method for Air Cleaning Performance of a High- Efficiency Particulate Air Filter System, IBR approved for § 1065.1001.

* * * * *

(f) *SAE material.* Copies of these materials may be obtained from the Society of Automotive Engineers International, 400 Commonwealth Dr., Warrendale, PA 15096–0001, or by calling (724) 776–4841, or at *http://www.sae.org*.

(1) SAE 770141, 1977, Optimization of Flame Ionization Detector for Determination of Hydrocarbon in Diluted Automotive Exhausts, Glenn D. Reschke, IBR approved for § 1065.360.

(2) SAE J1151, Methane Measurement Using Gas Chromatography, Revised September 2011, IBR approved for §§ 1065.267 and 1065.750.

■ 283. A new subpart L is added to read as follows:

Subpart L—Methods for Unregulated and Special Pollutants

Sec.
1065.1101 Applicability.
Semi-Volatile Organic Compounds
1065.1103 General provisions for SVOC measurement.
1065.1105 Sampling system design.
1065.1107 Sample media and sample system preparation; sampler assembly.
1065.1109 Post-test sampler disassembly and sample extraction.
1065.1111 Sample analysis.

Subpart L—Methods for Unregulated and Special Pollutants

§ 1065.1101 Applicability.

This subpart specifies procedures that may be used to measure emission constituents that are not measured (or not separately measured) by the test procedures in the other subparts of this part. These procedures are included to facilitate consistent measurement of unregulated pollutants primarily for purposes other than compliance with emission standards. Unless otherwise specified in the standard-setting part, use of these procedures is optional and does not replace any requirements in the rest of this part.

Semi-Volatile Organic Compounds

§ 1065.1103 General provisions for SVOC measurement.

The provisions of §§ 1065.1103 through 1065.1111 specify procedures for the measurement of semi-volatile organic compounds (SVOC) along with PM. The provisions of these sections specify how to collect a sample of the SVOCs during exhaust testing procedures, as well as how to use wet chemistry techniques to extract SVOCs from the sample media for analysis. Note that the precise method you use will depend on the category of SVOCs being measured. For example, the method used to measure polynuclear aromatic hydrocarbons (PAHs) will differ slightly from the method used to measure dioxins.

(a) Laboratory cleanliness is especially important throughout the course of SVOC testing. Thoroughly clean all sample train components and glassware before testing to avoid sample contamination.

(b) Throughout the course of your testing we recommend that media blanks be analyzed for each batch of media (sorbent, filters, etc.) that is prepared for testing. Blank sorbent modules with inlet and outlet covered (i.e., field blanks) should periodically accompany the test sample train throughout the course of a test, including the sample train and sorbent module disassembly, sample packaging, and storage. Use good engineering judgment to determine the frequency of field blanks. During testing, the field blank sample train should reside in close proximity to the sampler.

(c) We recommend the use of isotope dilution techniques, including the use of isotopically labeled surrogate, internal, alternate, and injection standards.

(d) If your target analytes degrade when exposed to ultraviolet radiation (such as nPAH), perform these procedures in the dark or with ultraviolet filters installed over the lights.

(e) Follow standard analytic chemistry methods for aspects of the analysis not specified.

(f) The following definitions and abbreviations apply for SVOC measurements:

(1) Soxhlet extraction means the extraction method invented by Franz von Soxhlet, in which the sample is placed in a thimble and rinsed repeatedly with a recycle of the extraction solvent.

(2) XAD–2 means a hydrophobic cross linked polystyrene copolymer resin adsorbent known commercially as Amberlite® XAD®-2, or an equivalent adsorbent.

(3) Semi-volatile organic compound (SVOC) means an organic compound that is sufficiently volatile to exist in vapor form in engine exhaust, but that readily condenses to liquid or solid form under atmospheric conditions. Most SVOCs have at least 14 carbon atoms per molecule and have a boiling point between 240 °C and 400 °C. SVOCs include dioxin, quinone, and nitro-PAH compounds. They may be a natural byproduct of combustion or created post combustion. Note that SVOCs may be detected as hydrocarbons and/or PM using the measurement procedures specified in this part; in other words, some fraction of measured mass of hydrocarbons and/or PM may be SVOCs.

(4) Kuderna-Danish concentrator means laboratory glassware known by this name that consists of an air-cooled condenser on top of an extraction bulb.

(5) Dean-Stark trap means laboratory glassware known by this name that uses a reflux condenser to collect water from samples extracted under reflux.

(6) PUF means polyurethane foam.

(7) Isotopically labeled means relating to a compound in which either all of the hydrogen atoms are replaced with the atomic isotope hydrogen-2 (deuterium) or one of the carbon atoms at a defined position in the molecule is replaced with the atomic isotope carbon-13.

§ 1065.1105 Sampling system design.

(a) *General.* We recommend that you design your SVOC batch sampler to extract sample from undiluted emissions to minimize the amount of SVOCs lost to the system. To the extent practical, adjust sampling times based on the rate of emission of target analytes from the engine to obtain analyte concentrations above the limit of detection. In some instances you may need to run repeat test cycles without replacing the sample media or disassembly of the batch sampler.

(b) *Sample probe, transfer lines, and sample media holder design and construction.* The sampling system should consist of a sample probe, transfer line, PM filter holder, cooling coil, sorbent module, and condensate trap. Construct sample probes, transfer lines, and sample media holders that

have inside surfaces of Nickel, Titanium or another nonreactive material capable of withstanding raw exhaust gas temperatures. All joints in the hot zone of the system should be sealed with gaskets made of nonreactive material similar to that of the sample train components. Teflon gaskets may be used in the cold zone. We recommend keeping the sampling system length as short as possible by locating all components as close to probes as practical to minimize the surface exposed to the exhaust.

(c) *Sample system configuration.* This paragraph (c) specifies the components necessary to collect SVOC samples, along with our recommended design parameters. Where you do not follow our recommendations, use good engineering judgment to design your sampling system so that it does not result in loss of SVOC during sampling. The sampling system should contain the following components in series in the order listed:

(1) *Sample probe.* Use a sample probe similar to the PM sample probe specified in subpart B of this part. We recommend that you heat the sample probe with a set point no higher the 200 °C. Note that heat from the engine exhaust may cause the probe temperature to exceed 200 °C at some points during the test.

(2) *Filter holder.* Use a PM filter holder similar to type of holder specified in subpart B of this part, although you will likely need to use a larger size to accommodate the high sample flow rates. We recommend the use of 110 mm filter for the testing of engines that utilize exhaust after treatment for removal of PM and 293 mm filters for engines that do not. You may heat the filter holder, but we recommend that your set point does not exceed 200 °C. Note that this differs from normal PM sampling procedures which maintain the filter at a much lower temperature to capture a significant fraction of exhaust SVOCs on the filter. In this method SVOCs that pass through the filter will be collected on the downstream sorbent module.

(3) *Cooling coil.* Use good engineering judgment to design a cooling coil (to be used with the water bath described in paragraph (e) of this section) that will drop the sample temperature to approximately 5 °C. Note that downstream of the cooling coil, the sample will be a mixture of a vapor phase hydrocarbons in CO_2 and air and a primarily aqueous liquid phase.

(4) *Sorbent and sorbent module.* Use a hydrophobic sorbent in a sealed sorbent module. Note that this sorbent module is intended to be the final stage for collecting the SVOC sample and should be sized accordingly. We recommend sizing the module to hold 40 g of XAD–2 along with polyurethane (PUF) plugs at either end of the module.

(5) *Condensate trap/drain.* Include a condensate trap to separate the aqueous liquid phase from the gas stream. We recommend using a peristaltic pump to remove water from the condensate trap over the course of the test to prevent build up of the condensate. Note that for some tests it may be appropriate to collect this water for analysis.

(d) *Sampler flow control.* For testing using the recommended filter and sorbent module sizes, we recommended targeting an average sample flow rate of 70 l/min to maximize SVOC collection. The sampler must be designed to maintain proportional sampling throughout the test. Verify proportional sampling after an emission test as described in § 1065.545.

(e) *Water bath.* Design the sample system with a water bath in which the cooling coil, sorbent module, and condensate trap will be submerged. Use a heat exchanger or ice to maintain the bath temperature at (3 to 7) °C.

§ 1065.1107 Sample media and sample system preparation; sampler assembly.

This section describes the types of sample media to be used as well as the cleaning procedure required to prepare the media and wetted sample surfaces for sampling.

(a) *Sample media.* The sampling system uses two types of sample media in series: The first to simultaneously capture the PM and some of the SVOCs, and a second to capture SVOCs that remain in the gas phase. Use the following sample media for capture of PM and gas phase SVOCs:

(1) For capture of PM, use pure quartz filters that do not contain any binder. Size the filter diameter to account for the expected PM emission rate, sample flow rate, and number of repeat tests to minimize filter change intervals. Note that when repeating test cycles to increase sample mass, you may replace the filter without replacing the sorbent or otherwise disassembling the batch sampler. In those cases include all filters in the extraction.

(2) For capture of gaseous SVOCs, utilize XAD–2 resin contained between two PUF plugs.

(b) *Sample media and sampler preparation.* Prepare pre-cleaned PM filters and pre-cleaned PUF/XAD–2 as needed. If the media is not to be used immediately after cleaning, store it in containers protected from light and ambient air.

(1) Pre-clean the filters via Soxhlet extraction with methylene chloride for 24 hours and dry over dry nitrogen in a low temperature vacuum oven.

(2) Pre-clean PUF and XAD–2 via a series of Soxhlet extractions: 8 h with water, 22 h with methanol, 22 h with methylene chloride, and 22 hours with toluene followed by drying with nitrogen.

(3) Clean sampler components including the probe, filter holder, condenser, sorbent module, and condensate collection vessel by rinsing three times with methylene chloride followed by three rinses with toluene. Prepare pre-cleaned aluminum foil for capping the probe inlet of the sampler after the sample train has been assembled.

(c) *Sorbent spiking.* Use good engineering judgment to verify the extent to which your extraction methods recover SVOCs absorbed to the sample media. We recommend spiking the XAD–2 resin with a surrogate standard prior to testing with a carbon-13 or hydrogen-2 isotopically labeled standard for each of the class of analytes targeted for analysis. Perform this spiking as follows:

(1) Insert the lower PUF plug into the bottom of the sorbent module.

(2) Add half of one portion of XAD–2 resin to the module and spike the XAD–2 in the module with the standard.

(3) Wait 1 hour for the solvent from the standard(s) to evaporate and then add the remaining 20 g of the XAD–2 resin to the module followed by the top PUF plug.

(4) Cover the inlet and outlet of the sorbent module with pre-cleaned aluminum foil.

(d) *Sample train assembly.* Upon completion of the sample media and sampler preparation, assemble the condensate trap, cooling coil, filter holder with filter, and sample probe to the sorbent module and lower assembly into the reservoir. Cover the probe inlet with pre-cleaned aluminum foil.

§ 1065.1109 Post-test sampler disassembly and sample extraction.

This section describes the process for sample train disassembly, sample train rinsing, sample extraction, and sample clean-up.

(a) *Sample train disassembly.* Disassemble the sample train in a clean environment upon completion of testing. Prepare to extract the SVOCs as follows:

(1) Remove the PM filter, PUF, and all of the XAD–2 from the sample train and place them into a Soxhlet extraction

thimble. If the sample media are to be stored, store them at ≤ 37 °C.

(2) Rinse sample train wetted surfaces upstream of the condensate trap with acetone followed by toluene (or a comparable solvent system), ensuring that all of the solvent that remains in liquid phase is collected (note that a fraction of the acetone and toluene will likely be lost via evaporation during mixing.) Rinse with solvent volumes that are sufficient to cover the all of the surfaces exposed to sample during testing. We recommend three fresh solvent rinses with acetone and two with toluene. We recommend rinse volumes of 60 mL per rinse for all sample train components except the condenser coil, of which you should use 200 mL per rinse. Keep the acetone rinsate separate from the toluene rinsate to the extent practicable. Rinsate fractions should be stored separately in glass bottles that have been pre-rinsed with acetone, hexane, and toluene (or bottles purchased pre-cleaned).

(3) Use good engineering judgment to determine if you should analyze the aqueous condensate phase for SVOCs. If you determine that analysis is necessary, use toluene to perform a liquid-liquid extraction of the SVOCs from the collected aqueous condensate using a sepratory funnel or equivalent. Add the toluene from this aqueous extraction to the toluene rinsate fraction mentioned in paragraph (a)(2) of this section.

(4) Reduce rinsate solvent volumes as needed using a Kuderna-Danish concentrator or rotary evaporator and retain these rinse solvents for reuse during sample media extraction for the same test. Care should be taken when concentrating via rotary evaporation to avoid loss of low molecular weight analytes.

(b) *Sample extraction.* Extract the SVOCs from the sorbent using Soxhlet extraction as described in this paragraph (b). To accommodate the Soxhlet extractions of all SVOCs from a single sample, two 16 hour extractions are required. This will reduce the possibility of loss of low molecular weight SVOCs and promote water removal. We recommend performing the first extraction with acetone/hexane and the second using toluene (or an equivalent solvent system).

(1) We recommend equipping the Soxhlet extractor with a Dean-Stark trap to facilitate the removal of residual water from the sample train rinse. The Soxhlet apparatus must be large enough to allow extraction of the PUF, XAD–2, and filter in a single batch. Include in the extractor setup a glass thimble with a coarse or extra coarse sintered glass bottom. Pre-clean the extractor using proper glass cleaning procedures. We recommend that the Soxhlet apparatus be cleaned with a 4 to 8 hr Soxhlet extraction with methylene chloride at a cycling rate of 3 cycles per hour. Discard the solvent used for pre-cleaning (no analysis is necessary).

(2) Load the extractor thimble before placing it in the extractor by first rolling the PM filter around the inner circumference of the thimble with the sampled side facing in. Push one PUF plug down into the bottom of the thimble then add approximately half of the XAD–2. The then spike the XAD–2 in the thimble with the isotopically labeled extraction standards of known mass. Target the center of the XAD–2 bed for extraction standard delivery. We recommend using multiple isotopically labeled extraction standards that cover the range of target analytes. Generally this means that you should use isotopically labeled standards at least for the lowest and highest molecular weight analytes for each category of compounds (such as PAHs and dioxins). These extraction standards monitor the efficiency of the extraction and are also used to determine analyte concentrations after analysis. Upon completion of spiking, add the remaining XAD–2 to the thimble followed by the remaining PUF plug. Then place the thimble into the extractor.

(3) For the initial extraction, combine the concentrated acetone rinses (from the sample train in paragraph (a) of this section) with enough hexane to bring the solvent volume up to the target level of 700 mL. Assemble the extractor and turn on the heating controls and cooling water. Allow the sample to reflux for 16 hours with the rheostat adjusted so that the extraction cycles at a rate of 3.0 ±0.5 cycles per hour. Drain the water from the Dean-Stark trap as it accrues by opening the stopcock on the trap. Discard this water unless it is to be analyzed. In most cases, any water present will be removed within approximately 2 hours of the start of the extraction.

(4) Upon completion of the initial extraction, remove the solvent and concentrate it to 4.0 ±0.5 mL using a Kuderna-Danish concentrator that includes a condenser such as a three-ball Snyder column with venting dimples and graduated collection tube. The use of this concentrator will minimize evaporative loss of lower molecular weight analytes.

(i) Rinse the round bottom flask of the extractor with 60 to 100 mL of hexane and add the rinsate to this concentrated extract.

(ii) Concentrate the mixture to 4 ±0.5 mL using a Kuderna-Danish concentrator or similar concentration apparatus.

(iii) Repeat paragraphs (b)(4)(i) and (ii) of this section 3 times or as necessary, to remove all of the residual solvent from the extractor round bottom flask, concentrating the final rinse to 4 ±0.5 mL.

(5) For the second extraction, combine the toluene rinses (from the sample train in paragraph (a) of this section) with any additional toluene needed to bring the solvent volume up to the target level of 700 mL. As noted in this paragraph (a) of this section, you may need to concentrate the rinse prior to addition to the extraction apparatus if the rinse solvent volume is too large. Allow the sample to reflux for 16 hours with the rheostat adjusted so that the extraction cycles at a rate of 3.0 ±0.5 cycles per hour. Although little or no water should be present during this stage, check the Dean-Stark trap during the first 2 hours of the extraction.

(6) Upon completion of the second extraction, remove the solvent and concentrate it to 4 ±0.5 mL as described in paragraph (b)(4) of this section. Using hexane from paragraph (4) of this section as the rinse solvent, effectively performs a solvent exchange of toluene with hexane.

(7) Combine the concentrated extract from paragraph (b)(4) of this section with the concentrated extract from paragraph (b)(6) of this section. Divide the extract into a number of fractions based on the number of analyses to be performed. Perform the separate sample clean up described in paragraph (c) of this section as needed for each fraction.

(c) *Sample clean up.* This paragraph (c) describes how to perform sample cleaning to remove unwanted SVOCs (that is, those SVOCs which you are not analyzing for) and solids from the sample extract before analysis. This process, which is known as ''sample clean up, reduces the potential for interference or co-elution of peaks during analytical analysis. Before proceeding with the sample clean up, spike the extract with an alternate standard that contains a known mass of isotopically labeled compounds that are identical (with the exception of the labeling) to the target analytes. The number of compounds that make up the standard will be determined by the category of the target analyte compounds (such as PAHs or dioxin). For example, PAHs require the use of 4 compounds in the alternate standard to cover the 4 basic ring structures of PAHs (2-ring, 3-ring, 4-ring, and 5-ring structures). These alternate standards

are used to monitor the efficiency of the clean up procedure. Before sample clean up, concentrate the fractionated sample to about 2 mL with a Kuderna-Danish concentrator or rotary evaporator, and then transfer the extract to an 8-mL test tube with hexane rinse. Concentrate to a volume of about 1 mL using a Kuderna-Danish concentrator. Since there are several column chromatographic cleanup options available, use good engineering judgment to select one appropriate for your target analytes. Note that these clean-up techniques generally remove compounds based on their polarity. The clean up procedures given in paragraphs (c)(1) and (2) of this section are examples of clean-up techniques for PAHs and nitropolynuclear aromatic hydrocarbons (nPAHs).

(1) *PAH clean up.* The following method is appropriate for cleaning up extracts intended for analysis of PAHs:

(i) Pack a glass gravity column (250 mm x 10 mm recommended) by inserting a clean glass wool plug into the bottom of the column followed by the addition of 10 grams of activated silica gel in methylene chloride. Tap the column to settle the silica gel, and then add a 1 cm layer of anhydrous sodium sulfate. Since variations among batches of silica gel may affect the elution volume of the various PAH, the volume of solvent required to completely elute all of the PAH must be verified by the analyst. The weight of the silica gel can then be adjusted accordingly.

(ii) Elute the column with 40 mL of hexane. The rate for all elutions should be about 2 mL/min and you may use dry air or N_2 to maintain the headspace slightly above atmospheric pressure to increase the elution rate. Discard the eluate just prior to exposure of the sodium sulfate layer to the air or N_2, transfer the 1 mL sample extract onto the column using two additional 2 mL rinses of hexane to complete the transfer. Just prior to exposure of the sodium sulfate layer to the air or N_2, begin elution of the column with 25 mL of hexane followed by 25 mL of 40 volume % methylene chloride in hexane. Collect the entire eluate and concentrate it to about 5 mL using the Kuderna-Danish concentrator or a rotary evaporator. Make sure that you do not evaporate all of the solvent from the extract during the concentration process. Transfer to a small sample vial using a hexane rinse and concentrate to 100 µL using a stream of nitrogen, gentle enough to not violently disturb the solvent. Store the extracts in a refrigerator at 4 °C or lower away from light until analysis.

(2) *nPAH clean up.* The following procedure, that was adapted from ''Determination and Comparison of Nitrated-Polycyclic Aromatic Hydrocarbons Measured in Air and Diesel Particulate Reference Materials'' (Bamford, H.A., *et al,* Chemosphere, Vol. 50, Issue 5, pages 575–587), is an appropriate method to clean up extracts intended for analysis of nPAHs:

(i) Condition an aminopropyl solid phase extraction (SPE) cartridge by eluting it with 20 mL of 20 volume % methylene chloride in hexane before use. Transfer the extract quantitatively to the SPE cartridge with at least two methylene chloride rinsings. Elute the extract through the SPE cartridge by using 40 ml of 20 volume % methylene chloride in hexane to minimize potential interference of polar constituents. Then reduce the extract to 0.5 ml in hexane and subject the extract to normal-phase liquid chromatography using pre-prepared a 9.6 mm X 25 cm semi-preparative Chromegabond® amino/cyano column, 5 µm particle size to isolate the nPAH fraction. The mobile phase is 20 volume % methylene chloride in hexane at a constant flow rate of 5 ml/min. Prior to each injection, the column should be back flashed with 60 ml of methylene chloride and then conditioned with 200 ml of 20 volume % methylene chloride in hexane. Collect the effluent and concentrate to about 2 mL using the Kuderna-Danish concentrator or a rotary evaporator. Transfer to a minivial using a hexane rinse and concentrate to 100 µL using a gentle stream of nitrogen. Store the extracts at 4 °C or lower away from light until analysis.

(ii) [Reserved]

§ 1065.1111 Sample analysis.

This subpart does not specify chromatographic or analytical methods to analyze extracts, because the selection of such methods is highly dependent on the nature of the target analytes. However, we recommend that prior to whichever sample analysis you choose, you spike the extract with an injection standard that contains a known mass of an isotopically labeled compound that is identical (with the exception of the labeling) to one of the target analytes. This injection standard is used to monitor the efficiency of the analytical process by verifying the volume of sample injected for analysis.

■ 284. Part 1066 is revised to read as follows:

PART 1066—VEHICLE–TESTING PROCEDURES

Subpart A—Applicability and General Provisions

1066.1 Applicability.
1066.2 Submitting information to EPA under this part.
1066.5 Overview of this part 1066 and its relationship to the standard-setting part.
1066.10 Other procedures.
1066.15 Overview of test procedures.
1066.20 Units of measure and overview of calculations.
1066.25 Recordkeeping.

Subpart B—Equipment, Measurement Instruments, Fuel, and Analytical Gas Specifications

1066.101 Overview.
1066.105 Ambient controls and vehicle cooling fans.
1066.110 Equipment specifications for emission sampling systems.
1066.120 Measurement instruments.
1065.122 Data updating, recording, and control for measurement instruments.
1066.130 Measurement instrument calibrations and verifications.
1066.137 Linearity verification.
1066.140 Diluted exhaust flow calibration.
1066.145 Engine fluids, test fuels, analytical gases, and other calibration standards.
1066.150 Analyzer interference and quench verification limit.

Subpart C—Dynamometer Specifications

1066.201 Dynamometer overview.
1066.210 Dynamometers.
1066.215 Summary of verification and calibration procedures for chassis dynamometers.
1066.220 Linearity verification for chassis dynamometer systems.
1066.225 Roll runout and diameter verification procedure.
1066.230 Time verification procedure.
1066.235 Speed verification procedure.
1066.240 Torque transducer calibration.
1066.245 Response time verification.
1066.250 Base inertia verification.
1066.255 Parasitic loss verification.
1066.260 Parasitic friction compensation evaluation.
1066.265 Acceleration and deceleration verification.
1066.270 Unloaded coastdown verification.
1066.280 Daily dynamometer readiness verification.
1066.290 Driver's aid.

Subpart D—Coastdown

1066.301 Overview of coastdown procedures.
1066.305 Coastdown procedures for motor vehicles at or below 14,000 pounds GVWR.
1066.310 Coastdown procedures for vehicles above 14,000 pounds GVWR.
1066.320 Dynamometer road-load setting.

Subpart E—Preparing Vehicles and Running an Exhaust Emission Test

1066.401 Overview.
1066.407 Vehicle preparation and preconditioning.

1066.410 Dynamometer test procedure.
1066.420 Vehicle operation.
1066.425 Test preparation.
1066.430 Performing emission tests.

Subpart F—Hybrids and Electric Vehicles

1066.501 Overview.

Subpart G—Calculations

1066.601 Overview.
1066.610 Mass-based and molar-based exhaust emission calculations.
1066.620 Dilution air background correction.
1066.630 NO_X intake-air humidity correction.
1066.640 Removed water correction.
1066.650 Flow meter calibration calculations.
1066.652 PDP, SSV, and CFV flow rate calculations.
1066.665 NMOG determination.
1066.695 Data requirements.

Subpart H—Cold-Temperature Test Procedures

1066.701 Applicability and general provisions.
1066.710 Cold-testing procedures for measuring CO and NMHC emissions and determining fuel economy.

Subpart I—Exhaust Emission Test Procedures for Motor Vehicles

1066.801 Applicability and general provisions.
1066.810 Road load power, test weight, and inertia weight class determination.
1066.814 Vehicle preparation.
1066.820 Exhaust emission test procedures for FTP emissions.
1066.822 Composite calculations for FTP exhaust emissions.
1066.830 Supplemental Federal Test Procedures; overview.
1066.831 Exhaust emission test procedures for agressive driving.
1066.832 Exhaust emission test procedure for SC03 emissions.
1066.835 AC17 Air conditioning efficiency test procedure.
1066.839 Highway fuel economy test procedure.
1066.840 Fuel storage system leak test procedure.

Subpart J—[Reserved]

Subpart K—Definitions and Other Reference Material

1066.1001 Definitions.
1066.1005 Symbols, abbreviations, acronyms, and units of measure.
1066.1010 Reference materials.

Authority: 42 U.S.C. 7401–7671q.

Subpart A—Applicability and General Provisions

§ 1066.1 Applicability.

(a) This part describes the procedures that apply to testing we require for the following vehicles:

(1) Model year 2014 and later heavy-duty highway vehicles we regulate under 40 CFR part 1037 that are not subject to chassis testing for exhaust emissions under 40 CFR part 86.

(2) Model year 2022 and later highway vehicles (light-duty and heavy-duty) that are subject to chassis testing for exhaust emissions under 40 CFR part 86. See 40 CFR part 86 for provisions describing how to implement this part 1066.

(b) The procedures of this part may apply to other types of vehicles, as described in this part and in the standard-setting part.

(c) The term ''you'' means anyone performing testing under this part other than EPA.

(1) This part is addressed primarily to manufacturers of vehicles, but it applies equally to anyone who does testing under this part for such manufacturers.

(2) This part applies to any manufacturer or supplier of test equipment, instruments, supplies, or any other goods or services related to the procedures, requirements, recommendations, or options in this part.

(d) Paragraph (a) of this section identifies the parts of the CFR that define emission standards and other requirements for particular types of vehicles. In this part, we refer to each of these other parts generically as the ''standard-setting part.'' For example, 40 CFR part 1037 is the standard-setting part for heavy-duty highway vehicles and parts 86 and 600 are the standard-setting parts for light-duty vehicles. For vehicles subject to 40 CFR part 86, subpart S, references to the standard-setting part include subpart I of this part.

(e) Unless we specify otherwise, the terms ''procedures'' and ''test procedures'' in this part include all aspects of vehicle testing, including the equipment specifications, calibrations, calculations, and other protocols and procedural specifications needed to measure emissions.

(f) For additional information regarding these test procedures, visit our Web site at *www.epa.gov*, and in particular *http://www.epa.gov/nvfel/testing/regulations.htm*.

§ 1066.2 Submitting information to EPA under this part.

(a) You are responsible for statements and information in your applications for certification, requests for approved procedures, selective enforcement audits, laboratory audits, production-line test reports, or any other statements you make to us related to this part 1066. If you provide statements or information to someone for submission to EPA, you are responsible for these statements and information as if you had submitted them to EPA yourself.

(b) In the standard-setting part and in 40 CFR 1068.101, we describe your obligation to report truthful and complete information and the consequences of failing to meet this obligation. See also 18 U.S.C. 1001 and 42 U.S.C. 7413(c)(2). This obligation applies whether you submit this information directly to EPA or through someone else.

(c) We may void any certificates or approvals associated with a submission of information if we find that you intentionally submitted false, incomplete, or misleading information. For example, if we find that you intentionally submitted incomplete information to mislead EPA when requesting approval to use alternate test procedures, we may void the certificates for all engine families certified based on emission data collected using the alternate procedures. This would also apply if you ignore data from incomplete tests or from repeat tests with higher emission results.

(d) We may require an authorized representative of your company to approve and sign the submission, and to certify that all the information submitted is accurate and complete. This includes everyone who submits information, including manufacturers and others.

(e) See 40 CFR 1068.10 for provisions related to confidential information. Note however that under 40 CFR 2.301, emission data are generally not eligible for confidential treatment.

(f) Nothing in this part should be interpreted to limit our ability under Clean Air Act section 208 (42 U.S.C. 7542) to verify that vehicles conform to the regulations.

§ 1066.5 Overview of this part 1066 and its relationship to the standard-setting part.

(a) This part specifies procedures that can apply generally to testing various categories of vehicles. See the standard-setting part for directions in applying specific provisions in this part for a particular type of vehicle. Before using this part's procedures, read the standard-setting part to answer at least the following questions:

(1) What drive schedules must I use for testing?

(2) Should I warm up the test vehicle before measuring emissions, or do I need to measure cold-start emissions during a warm-up segment of the duty cycle?

(3) Which exhaust constituents do I need to measure? Measure all exhaust constituents that are subject to emission standards, any other exhaust

constituents needed for calculating emission rates, and any additional exhaust constituents as specified in the standard-setting part. See 40 CFR 1065.5 regarding requests to omit measurement of N_2O and CH_4 for vehicles, not subject to N_2O or CH_4 emission standards.

(4) Do any unique specifications apply for test fuels?

(5) What maintenance steps may I take before or between tests on an emission-data vehicle?

(6) Do any unique requirements apply to stabilizing emission levels on a new vehicle?

(7) Do any unique requirements apply to test limits, such as ambient temperatures or pressures?

(8) [Reserved]

(9) Are there any emission standards specified at particular operating conditions or ambient conditions?

(10) Do any unique requirements apply for durability testing?

(b) The testing specifications in the standard-setting part may differ from the specifications in this part. In cases where it is not possible to comply with both the standard-setting part and this part, you must comply with the specifications in the standard-setting part. The standard-setting part may also allow you to deviate from the procedures of this part for other reasons.

(c) The following table shows how this part divides testing specifications into subparts:

TABLE 1 OF § 1066.5—DESCRIPTION OF PART 1066 SUBPARTS.

This subpart	Describes these specifications or procedures
Subpart A	Applicability and general provisions.
Subpart B	Equipment for testing.
Subpart C	Dynamometer specifications.
Subpart D	Coastdowns for testing.
Subpart E	How to prepare your vehicle and run an emission test.
Subpart F	How to test hybrid vehicles.
Subpart G	Test procedure calculations.
Subpart H	Cold temperature testing.
Subpart I	Exhaust emission test procedures for motor vehicles.
Subpart J	Reserved.
Subpart K	Definitions and reference material.

§ 1066.10 Other procedures.

(a) *Your testing.* The procedures in this part apply for all testing you do to show compliance with emission standards, with certain exceptions noted in this section. In some other sections in this part, we allow you to use other procedures (such as less precise or less accurate procedures) if they do not affect your ability to show that your vehicles comply with the applicable emission standards. This generally requires emission levels to be far enough below the applicable emission standards so that any errors caused by greater imprecision or inaccuracy do not affect your ability to state unconditionally that the engines meet all applicable emission standards.

(b) *Our testing.* These procedures generally apply for testing that we do to determine if your vehicles comply with applicable emission standards. We may perform other testing as allowed by the Act.

(c) *Exceptions.* We may allow or require you to use procedures other than those specified in this part as described in 40 CFR 1065.10(c). All the test procedures noted as exceptions to the specified procedures are considered generically as ''other procedures.'' Note that the terms ''special procedures'' and ''alternate procedures'' have specific meanings; ''special procedures'' are those allowed by 40 CFR 1065.10(c)(2) and ''alternate procedures'' are those allowed by 40 CFR 1065.10(c)(7). If we require you to request approval to use other procedures under this paragraph (c), you may not use them until we approve your request.

§ 1066.15 Overview of test procedures.

This section outlines the procedures to test vehicles that are subject to emission standards.

(a) In the standard-setting part, we set emission standards in g/mile (or g/km), for the following constituents:

(1) Total oxides of nitrogen, NO_X.

(2) Hydrocarbons, HC, which may be expressed in the following ways:

(i) Total hydrocarbons, THC.

(ii) Nonmethane hydrocarbons, NMHC, which results from subtracting methane (CH_4) from THC.

(iii) Total hydrocarbon-equivalent, THCE, which results from adjusting THC mathematically to be equivalent on a carbon-mass basis.

(iv) Nonmethane hydrocarbon-equivalent, NMHCE, which results from adjusting NMHC mathematically to be equivalent on a carbon-mass basis.

(v) Nonmethane organic gases, NMOG, which are calculated either from fully or partially speciated measurement of hydrocarbons including oxygenates, or by adjusting measured NMHC values based on fuel oxygenate properties.

(3) Particulate mass, PM.

(4) Carbon monoxide, CO.

(5) Carbon dioxide, CO_2.

(6) Methane, CH_4.

(7) Nitrous oxide, N_2O.

(8) Formaldehyde, CH_2O.

(b) Note that some vehicles may not be subject to standards for all the emission constituents identified in paragraph (a) of this section. Note also that the standard-setting part may include standards for pollutants not listed in paragraph (a) of this section.

(c) The provisions of this part apply for chassis dynamometer testing where vehicle speed is controlled to follow a prescribed duty cycle while simulating vehicle driving through the dynamometer's road-load settings. We generally set emission standards over test intervals and/or drive schedules, as follows:

(1) *Vehicle operation.* Testing involves measuring emissions and miles travelled while operating the vehicle on a chassis dynamometer. Refer to the definitions of ''duty cycle'' and ''test interval'' in § 1066.1001. Note that a single drive schedule may have multiple test intervals and require weighting of results from multiple test intervals to calculate a composite distance-based emission value to compare to the standard.

(2) *Constituent determination.* Determine the total mass of each constituent over a test interval by selecting from the following methods:

(i) *Continuous sampling.* In continuous sampling, measure the constituent's concentration continuously from raw or dilute exhaust. Multiply this concentration by the continuous (raw or dilute) flow rate at the emission sampling location to determine the constituent's flow rate. Sum the constituent's flow rate continuously over the test interval. This sum is the total mass of the emitted constituent.

(ii) *Batch sampling.* In batch sampling, continuously extract and store a sample of raw or dilute exhaust for later measurement. Extract a sample proportional to the raw or dilute exhaust flow rate, as applicable. You may extract and store a proportional sample of exhaust in an appropriate container, such as a bag, and then measure HC, CO, and NO_X concentrations in the container after the test interval. You may deposit PM from proportionally extracted exhaust onto an appropriate substrate, such as a filter. In this case, divide the PM by the amount of filtered exhaust to calculate the PM concentration. Multiply batch sampled concentrations by the total (raw or dilute) flow from which it was extracted during the test interval. This product is the total mass of the emitted constituent.

(iii) *Combined sampling.* You may use continuous and batch sampling simultaneously during a test interval, as follows:

(A) You may use continuous sampling for some constituents and batch sampling for others.

(B) You may use continuous and batch sampling for a single constituent, with one being a redundant measurement, subject to the provisions of 40 CFR 1065.201.

(d) Refer to the standard-setting part for calculations to determine g/mile emission rates.

(e) You must use good engineering judgment for all aspects of testing under this part. While this part highlights several specific cases where good engineering judgment is especially relevant, the requirement to use good engineering judgment is not limited to those provisions where we specifically re-state this requirement.

§ 1066.20 Units of measure and overview of calculations.

(a) *System of units.* The procedures in this part follow both conventional English Units and the International System of Units (SI), as detailed in NIST Special Publication 811, which we incorporate by reference in § 1066.1010. Except where specified, equations work with any system of units. Where the equations depend on the use of specific units, these units are identified.

(b) *Units conversion.* Use good engineering judgment to convert units between measurement systems as needed. For example, if you measure vehicle speed as kilometers per hour and we specify a precision requirement in terms of miles per hour, convert your measured kilometer per hour value to miles per hour before comparing it to our specification. The following conventions are used throughout this document and should be used to convert units as applicable:

(1) 1 hp = 33,000 ft·lbf/min = 550 ft·lbf/s = 0.7457 kW.

(2) 1 lbf = 32.174 ft·lbm/s^2 = 4.4482 N.

(3) 1 inch = 25.4 mm.

(4) 1 mile = 1609.344 m.

(5) For ideal gases, 1 μmol/mol = 1 ppm.

(6) For ideal gases, 10 mmol/mol = 1%.

(c) *Temperauture.* We generally designate temperatures in units of degrees Celsius (°C) unless a calculation requires an absolute temperature. In that case, we designate temperatures in units of Kelvin (K). For conversion purposes throughout this part, 0 °C equals 273.15 K. Unless specified otherwise, always use absolute temperature values for multiplying or dividing by temperature.

(d) *Absolute pressure.* Measure absolute pressure directly or calculate it as the sum of atmospheric pressure plus a differential pressure that is referenced to atmospheric pressure. Always use absolute pressure values for multiplying or dividing by pressure.

(e) *Rounding.* The rounding provisions of 40 CFR 1065.20 apply for calculations in this part. This generally specifies that you round final values but not intermediate values. Use good engineering judgment to record the appropriate number of significant digits for all measurements.

(f) *Interpretation of ranges.* Interpret a range as a tolerance unless we explicitly identify it as an accuracy, repeatability, linearity, or noise specification. See 40 CFR 1065.1001 for the definition of tolerance. In this part, we specify two types of ranges:

(1) Whenever we specify a range by a single value and corresponding limit values above and below that value (such as X ±Y), target the associated control point to that single value (X). Examples of this type of range include ''±10% of maximum pressure'', or ''(30 ±10) kPa''. In these examples, you would target the maximum pressure or 30 kPa, respectively.

(2) Whenever we specify a range by the interval between two values, you may target any associated control point to any value within that range. An example of this type of range is ''(40 to 50) kPa''.

(g) *Scaling of specifications with respect to an applicable standard.* Because this part 1066 applies to a wide range of vehicles and emission standards, some of the specifications in this part are scaled with respect to a vehicle's applicable standard or weight. This ensures that the specification will be adequate to determine compliance, but not overly burdensome by requiring unnecessarily high-precision equipment. Many of these specifications are given with respect to a ''flow-weighted mean'' that is expected at the standard or during testing. Flow-weighted mean is the mean of a quantity after it is weighted proportional to a corresponding flow rate. For example, if a gas concentration is measured continuously from the raw exhaust of an engine, its flow-weighted mean concentration is the sum of the products of each recorded concentration times its respective exhaust flow rate, divided by the sum of the recorded flow rates. As another example, the bag concentration from a CVS system is the same as the flow-weighted mean concentration, because the CVS system itself flow-weights the bag concentration.

§ 1066.25 Recordkeeping.

The procedures in this part include various requirements to record data or other information. Refer to the standard-setting part and § 1066.695 regarding recordkeeping requirements. You must promptly send us organized, written records in English if we ask for them. We may review them at any time.

Subpart B—Equipment, Measurement Instruments, Fuel, and Analytical Gas Specifications

§ 1066.101 Overview.

(a) This subpart addresses equipment related to emission testing, as well as test fuels and analytical gases. This section addresses emission sampling and analytical equipment, test fuels, and analytical gases.

(b) The provisions of 40 CFR part 1065 specify engine-based procedures for measuring emissions. Except as specified otherwise in this part, the provisions of 40 CFR part 1065 apply for testing required by this part as follows:

(1) The provisions of 40 CFR part 1065, subpart B, describe equipment specifications for exhaust dilution and sampling systems; these specifications apply for testing under this part as described in § 1066.110.

(2) The provisions of 40 CFR part 1065, subpart C, describe specifications for measurement instrument; these specifications apply for testing under this part as described in § 1066.120.

(3) The provisions of 40 CFR part 1065, subpart D, describe specifications for measurement instrument calibrations and verifications; these specifications apply for testing under this part as described in § 1066.130.

(4) The provisions of 40 CFR part 1065, subpart H, describe specifications for fuels, engine fluids, and analytical gases; these specifications apply for testing under this part as described in § 1066.145.

(5) The provisions of 40 CFR part 1065, subpart I, describe specifications for testing with oxygenated fuels; these specifications apply for NMOG determinations as described in § 1066.665.

(c) The provisions of this subpart are intended to specify systems that can very accurately and precisely measure emissions from motor vehicles such as light-duty vehicles. To the extent that this level of accuracy and/or precision is not necessary for testing highway motorcycles or nonroad vehicles, we may waive or modify the specifications and requirements of this part for testing these other vehicles, consistent with good engineering judgment. For example, it may be appropriate to allow the use of a hydrokinetic dynamometer that is not able to meet all the

performance specifications described in this subpart.

§ 1066.105 Ambient controls and vehicle cooling fans.

(a) *Ambient conditions.* Dynamometer testing under this part generally requires that you maintain the test cell within a specified range of ambient temperature and humidity. Use good engineering judgment to maintain relatively uniform temperatures throughout the test cell before testing. You are generally not required to maintain uniform temperatures throughout the test cell while the vehicle is running due to the heat generated by the vehicle. Measured humidity values must accurately represent the humidity of intake air; other than the intake air, humidity does not affect emissions so humidity need not be uniform throughout the test cell.

(b) *General requirements for cooling fans.* Use good engineering judgment to select and configure fans to cool the test vehicle in a way that meets the specifications of paragraph (c) of this section and simulates in-use operation. If you demonstrate that the specified fan configuration is impractical for special vehicle designs, such as vehicles with rear-mounted engines, or it does not provide adequate cooling to properly represent in-use operation, you may ask us to approve increasing the fan's capacity or using additional fans.

(c) *Allowable cooling fans for vehicles at or below 14,000 pounds GVWR.* Cooling fan specifications for vehicles at or below 14,000 pounds GVWR depend on the test cycle. Paragraph (c)(1) of this section summarizes the cooling fan specifications for the different test cycles; the detailed specifications are described in paragraphs (c)(2) through (5) of this section. See § 1066.410 for instruction regarding how to use the fans during testing.

(1) Cooling fan specifications for different test cycles are summarized as follows:

(i) For FTP and LA–92 test cycles, the allowable cooling fan configurations are described in paragraphs (c)(2) and (4) of this section.

(ii) For the US06 test cycle, the allowable cooling fan configurations are described in paragraphs (c)(2) and (5) of this section. The cooling fan configuration in paragraph (c)(4) of this section is also allowable with advance approval.

(iii) For SC03 and AC17 test cycles, the allowable cooling fan configuration is described in paragraph (c)(3) of this section.

(iv) For the HFET test cycle, the allowable cooling fan configurations are described in paragraphs (c)(2) and (4) of this section.

(2) You may use a road-speed modulated fan system meeting the specifications of this paragraph (c)(2) for anything other than SC03 and AC17 testing. Use a road-speed modulated fan that achieves a linear speed of cooling air at the blower outlet that is within ±3.0 mph (±1.3 m/s) of the corresponding roll speed when vehicle speeds are between 5 and 30 mph (2.2 to 13.4 m/s), and within ±6.5 mph (±2.9 m/s) of the corresponding roll speed at higher vehicle speeds; however you may limit the fan's maximum linear speed to 70 mph. We recommend that the cooling fan have a minimum opening of 0.2 m^2 and a minimum width of 0.8 m.

(i) Verify the air flow velocity for fan speed corresponding to vehicle speeds of 20 and 40 mph using an instrument that has an accuracy of ±2% of the measured air flow speed.

(ii) For fans with rectangular outlets, divide the fan outlet into the as shown in Figure 1 of this section. As denoted by the ''+'' in the figure, measure flow from the center of each section; however do not measure the flow from the center section.

Figure 1 of §1066.105—Rectangular fan outlet grid.

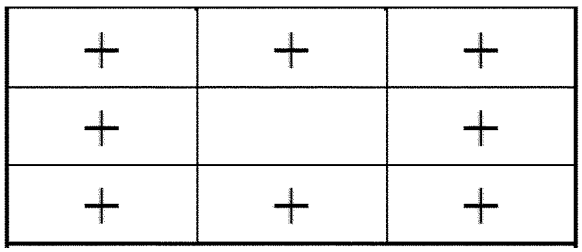

(iii) For fans with circular outlets, divide the fan outlet into 8 equal sections as shown in Figure 2 of this section. As denoted by the ''+'' in the figure, measure flow on the radial centerline of each section (at 22.5°) at a radius of two-thirds of the total radius.

Figure 2 of §1066.105—Circular fan outlet grid.

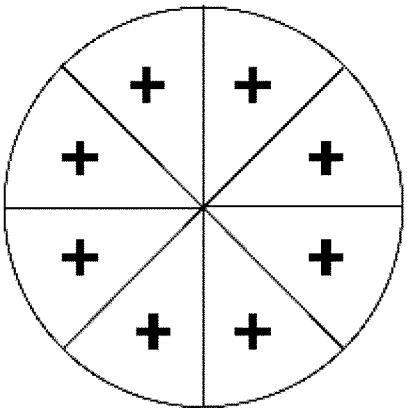

(iv) Verify that the fan air flow velocity vector perpendicular to the axial flow velocity vector is less than 15% of the mean velocity measured at fan speeds corresponding to vehicle speeds of 20 and 40 mph.

(v) Verify that the uniformity of the fan axial flow tolerance is within ±4.0 mph at fan speeds corresponding to 20 mph and within ±8.0 mph at fan speeds corresponding to 40 mph. For example, at 20 mph, flow at all axial locations denoted by the ''+'' across the discharge nozzle must be between 16 and 24 mph. Measure the fan axial air flow velocity 60 cm from the nozzle outlet at each point of the discharge area grid.

(3) For SC03 and AC17 testing, use a road-speed modulated fan with a minimum air flow nozzle discharge area that is equal to or exceeds the vehicle's frontal inlet area. We recommend using a fan with a discharge area of 1.7 m^2.

(i) Air flow volumes must be proportional to vehicle speed. When meeting the minimum discharge area requirements, the flow volume would vary from 0 m^3/s at 0 mph to approximately 450 m^3/s at 60 mph. If this fan is also the only source of test cell air circulation or if fan operational mechanics make the 0 mph air flow requirement impractical, air flow of 2 mph or less at 0 mph vehicle speed is allowed.

(ii) Verify that the fan air flow velocity vector perpendicular to the axial flow velocity vector is less than 10% of the mean velocity measured at fan speeds corresponding to vehicle speeds between 20 and 40 mph.

(iii) Verify that the uniformity of fan axial flow tolerance is 20% of the fan speed corresponding to vehicle speeds of 20 and 40 mph. For example, at 20 mph, flow at all axial locations across the discharge nozzle must be between 16 and 24 mph. Measure the fan axial air flow velocity 60 cm from the nozzle outlet at each point of the discharge area grid.

(iv) The instrument used to verify the air velocity must have an accuracy of ±2% of the measured air flow speed.

(v) In addition to the road-speed modulated fan, we may approve the use of one or more fixed-speed fans to provide proper cooling to represent in-use operation, but only up to a total of 2.50 m^3/s for all additional fans.

(4) You may use a fixed-speed fan with a maximum capacity up to 2.50 m^3/s for FTP, LA–92, and HFET testing.

(5) You may use a fixed-speed fan with a maximum capacity up to 7.10 m^3/s for US06 testing.

(d) *Allowable cooling fans for vehicles above 14,000 pounds GVWR.* For all testing, use a road-speed modulated fan system that achieves a linear speed of cooling air at the blower outlet that is within ±3.0 mph (±1.3 m/s) of the corresponding roll speed when vehicle speeds are between 5 and 30 mph (2.2 to 13.4 m/s), and within ±10 mph (±4.5 m/s) of the corresponding roll speed at higher vehicle speeds. For vehicles above 19,500 pounds GVWR, we recommend that the cooling fan have a minimum opening of 2.75 m^2, a minimum flow rate of 60 m^3/s at 50 mph, and a minimum speed profile across the duct, in the free stream flow, that is ±15% of the target flow rate.

§ 1066.110 Equipment specifications for emission sampling systems.

(a) This section specifies equipment related to emission testing, other than measurement instruments. This equipment includes two broad categories—dynamometers (described further in subpart C of this part) and emission-sampling hardware. Other related sections in this subpart identify measurement instruments (§ 1066.120), describe how to evaluate the performance of these instruments (§§ 1066.130 and 1066.137), describe how to calibrate a CVS (§ 1066.140), specify engine fluids and analytical gases (§ 1066.145), and specify requirements for analyzer interference and quench verification (§ 1066.150).

(b) The following equipment specifications apply for testing under this part:

(1) *Tailpipe connections.* Connect a vehicle's exhaust system to any dilution stage as follows:

(i) Minimize laboratory exhaust tubing lengths. You may use a total length of laboratory tubing up to 4 m, without needing to heat or insulate the tubing. However, you may use a total length of laboratory tubing up to 10 m if you insulate and/or heat the tubing to minimize the temperature difference between the exhaust gas and the tubing wall over the course of the emission test. The laboratory exhaust tubing starts at the end of the vehicle's tailpipe. The laboratory exhaust tubing ends at the first sample point or the point of first dilution. You may use flexible laboratory exhaust tubing at any location in the laboratory exhaust system, although we recommend that you limit the amount of flexible tubing to the extent practicable. For multiple-tailpipe configurations where the tailpipes combine into a single flow path for emission sampling, the start of the laboratory exhaust tubing may be taken at the last joint where the exhaust flow first becomes a single, combined flow.

(ii) You may insulate or heat any laboratory exhaust tubing.

(iii) Use laboratory exhaust tubing materials that are smooth-walled and not chemically reactive with exhaust constituents. (For purposes of this paragraph (b)(1), nominally smooth spiral-style and accordion-style flexible tubing are considered to be smooth-walled.) For measurements involving

PM, tubing materials must also be electrically conductive. Stainless steel is an acceptable material for any measurements. You may use short sections of nonconductive flexible tubing to connect a PM sampling system to the vehicle's tailpipe; use good engineering judgment to limit the amount of nonconductive surface area exposed to the vehicle's exhaust.

(iv) We recommend that you use laboratory exhaust tubing that has either a wall thickness of less than 2 mm or is air gap-insulated to minimize temperature differences between the wall and the exhaust.

(v) You must seal your system to the extent necessary to ensure that any remaining leaks do not affect your ability to demonstrate compliance with the applicable standards. We recommend that you seal all known leaks.

(vi) Electrically ground the entire exhaust system, with the exception of nonconductive flexible tubing, as allowed under paragraph (b)(1)(iii) of this section.

(vii) For vehicles with multiple tailpipes, route the exhaust into a single flow. To ensure mixing of the multiple exhaust streams before emission sampling, you may configure the exhaust system with turbulence generators, such as orifice plates or fins, to achieve good mixing. We recommend a minimum Reynolds number, *Re#*, of 4000 for the combined exhaust stream, where *Re#* is based on the inside diameter of the combined flow at the first sampling point. *Re#* is defined in 40 CFR 1065.640.

(2) *Provisions from 40 CFR part 1065.* Use equipment specifications in 40 CFR 1065.140 through 40 CFR 1065.190, except as follows:

(i) For PM background measurement, the following provisions apply instead of the analogous provisions in 40 CFR 1065.140(b):

(A) You need not measure PM background for every test. You may apply PM background correction using a moving-average background value as long as your background PM sample media (e.g., filters) were all made by the same manufacturer from the same material. Use good engineering judgment to determine how many background samples make up the moving average and how frequently to update those values. For example, you might take one background sample per week and average that sample into previous background values, maintaining five observations for each calculated average value. Background sampling time should be representative of the test interval duration to which the background correction is applied.

(B) You may sample background PM from the dilution tunnel at any time before or after an emission test using the same sample train used during the emission test. For this background sampling, the dilution tunnel blower must be turned on, the vehicle must be disconnected from the exhaust transfer tube, and the exhaust transfer tube must be capped.

(C) The duration of your background sample does not need to be the same as the test cycle in which you are applying the background correction, provided it is not inconsistent with the use of good engineering judgment.

(D) Your background correction may not exceed 5 μg or 5% of the net PM mass expected at the standard, whichever allowance is greater.

(ii) The provisions of 40 CFR 1065.140(d)(2)(iv) do not apply.

(iii) For PM samples, configure dilution systems using the following limits:

(A) Control the dilution air temperature as described in 40 CFR 1065.140(e)(1), except that the temperature may set to (15 to 52) °C. Use good engineering judgment to control PM sample temperature as required under 40 CFR 1065.140(e)(4).

(B) Apply the provisions of this paragraph (b)(2)(iii)(B) instead of 40 CFR 1065.140(e)(2). Add dilution air to the raw exhaust such that the overall dilution factor of diluted exhaust to raw exhaust, as determined in Eq. 1066.620–2 or 1066.620–3, is within the range of (7:1 to 20:1). Compliance with this dilution factor range may be determined for an individual test interval or as a time-weighted average over the entire duty cycle as determined in Eq. 1066.620–4. The maximum dilution factor limit of 20:1 does not apply for plug-in hybrid electric vehicles (PHEVs) and hybrid electric vehicles (HEVs), since the dilution factor is infinite when the engine is off; however we strongly recommend that you stay under the maximum dilution factor limit when the engine is running. For partial-flow sampling systems, determine dilution factor using Eq. 1066.620–3. When determining dilution factor for PM samples utilizing secondary dilution air, multiply the dilution factor by the dilution ratio of secondary dilution air to primary diluted exhaust.

(iv) In addition to the allowances in 40 CFR 1065.140(c)(6) you may also heat the dilution air as described in paragraph (b)(2)(iii)(A) of this section to prevent or limit aqueous condensation.

(v) If you choose to dilute the exhaust by using a remote mix tee, which dilutes the exhaust at the tailpipe, you may use the following provisions consistent with good engineering judgment, provided they do not affect your ability to demonstrate compliance with the standard:

(A) You may use accordion-style or smooth-walled flexible tubing in the dilution tunnel upstream of flow or gaseous emission measurement locations.

(B) You may use smooth-walled electrically conductive flexible tubing in the dilution tunnel upstream of where PM emission measurements are made.

(C) Materials for inside surfaces are limited to 300 series stainless steel and polymer-based materials.

(D) Use good engineering judgment to ensure that the materials you choose do not cause or contribute to significant loss of PM from your sample.

(vi) Paragraph (b)(1)(vi) of this section applies instead of 40 CFR 1065.145(b).

(c) The following table summarizes the requirements of paragraph (b)(2) of this section:

TABLE 1 OF § 1066.110—SUMMARY OF EQUIPMENT SPECIFICATIONS FROM 40 CFR PART 1065, SUBPART B, THAT APPLY FOR CHASSIS TESTING

40 CFR part 1065 references	Applicability for chassis testing under this part
40 CFR 1065.140	Use all except: 40 CFR 1065.140(b) applies as described in this section. Use 40 CFR 1065.140(c)(6), with the additional allowance described in this section. Do not use 40 CFR 1065.140(d)(2)(iv). Use 40 CFR 1065.140(e)(1) as described in this section. Do not use 40 CFR 1065.140(e)(2).
40 CFR 1065.145	Use all except 40 CFR 1065.145(b).
40 CFR 1065.150 through 1065.190	Use all.

§ 1066.120 Measurement instruments.

The measurement instrument requirements in 40 CFR part 1065, subpart C, apply with the following exceptions:

(a) The provisions of § 1066.122 apply instead of 40 CFR 1065.202.

(b) The provisions of 40 CFR 1065.210 and 1065.295 do not apply.

§ 1066.122 Data updating, recording, and control for measurement instruments.

This section specifies criteria that your test system must meet for updating and recording data. It also specifies criteria for controlling the systems related to driver demand, the dynamometer, sampling equipment, and measurement instruments.

(a)(1) This paragraph (a)(1) applies where we specify a minimum command and control frequency that is greater than the minimum recording frequency, such as for sample flow rates from a CVS that does not have a heat exchanger. For these measurements, the rate at which you read and interpret the signal must be at least as frequent as the minimum command and control frequency. Values may be recorded at the same frequency. They may also be recorded as means of the values, provided the frequency of the mean values meets the minimum recording frequency. All values read must be either recorded or used to calculate the mean values. For example, if your system reads and controls the sample flow rate at 10 Hz, you may record these values at 10 Hz, record them at 5 Hz by averaging pairs of consecutive points together, or record them at 1 Hz by averaging five consecutive points together.

(2) For all other measured values covered by this section, you may record the values instantaneously or as mean values, consistent with good engineering judgment.

(3) You may not use rolling averages of measured values where a given measured value is included in more than one recorded mean value.

(b) Use data acquisition and control systems that can command, control, and record at the following minimum frequencies:

TABLE 1 OF § 1066.122—DATA RECORDING AND CONTROL MINIMUM FREQUENCIES

Applicable section	Measured values	Minimum command and control frequency	Minimum recording frequency [a]
§ 1066.310	Vehicle speed		10 Hz.
§ 1066.320			
§ 1066.430	Continuous concentrations of raw or dilute analyzers		1 Hz.
§ 1066.430	Power analyzer [b]		1 Hz.
§ 1066.501			
§ 1066.430	Bag concentrations of raw or dilute analyzers		1 mean value per test interval.
40 CFR 1065.545	Diluted exhaust flow rate from a CVS with a heat exchanger upstream of the flow measurement.		1 Hz.
§ 1066.430			
40 CFR 1065.545	Diluted exhaust flow rate from a CVS without a heat exchanger upstream of the flow measurement.	N/A	1 Hz means.
§ 1066.430			
40 CFR 1065.545	Dilution air flow if actively controlled (for example, a partial-flow PM sampling system).	5 Hz	1 Hz means.
§ 1066.430			
40 CFR 1065.545	Sample flow from a CVS that has a heat exchanger	1 Hz	1 Hz.
§ 1066.430			
40 CFR 1065.545	Sample flow from a CVS that does not have a heat exchanger.	5 Hz	1 Hz means.
§ 1066.430			
§ 1066.425	Ambient temperature		1 Hz.
§ 1066.425	Ambient humidity		1 Hz.
§ 1066.425	Heated sample system temperatures, including PM filter face.		1 Hz.

[a] 1 Hz means are data reported from the instrument at a higher frequency, but recorded as a series of mean values at a rate of 1 Hz.
[b] For power analyzers' sampling frequency, follow SAE J1711 (incorporated by reference in § 1066.1010).

§ 1066.130 Measurement instrument calibrations and verifications.

The measurement instrument calibration and verification requirements in 40 CFR part 1065, subpart D, apply with the following exceptions:

(a) The calibration and verification provisions of 40 CFR 1065.303 do not apply for engine speed, torque, fuel rate, or intake air flow. Section 1066.133 specifies additional calibration and verification provisions that apply specifically for chassis testing.

(b) The linearity verification provisions of 40 CFR 1065.307 do not apply for engine speed, torque, fuel rate, or intake air flow. Section 1066.137 specifies additional linearity verification provisions that apply specifically for chassis testing.

(c) The provisions of § 1066.220 apply instead 40 CFR 1065.310.

(d) The provisions of 40 CFR 1065.320, 1065.325, and 1065.395 do not apply.

(e) If you are measuring flow volumetrically (rather than by molar), the provisions of § 1066.140 apply instead of 40 CFR 1065.340.

(f) The provisions of § 1066.150 apply instead 40 CFR 1065.350(c), 1065.355(c), 1065.370(c), and 1065.375(c).

(g) Table 1 of this section summarizes the required and recommended calibrations and verifications that are unique to testing under this part and indicates when these have to be performed. Perform other required or recommended calibration and verifications as described in 40 CFR 1065.303, with the exceptions noted in this section. Table 1 follows:

TABLE 1 OF § 1066.130–SUMMARY OF REQUIRED CALIBRATION AND VERIFICATIONS

Type of calibration or verification	Minimum frequency [a]
40 CFR 1065.303: Flow rates	This calibration does not apply for testing under this part; see § 1066.133 for alternative provisions.
40 CFR 1065.307: Linearity verification.	The linearity calibrations from 40 CFR part 1065 do not apply under this part for engine speed, torque, fuel rate, or intake air flow; the linearity verification described in § 1066.137 applies for the following measurements: Dynamometer Speed: See § 1066.220. Dynamometer Torque: See § 1066.220.
40 CFR 1065.310: Torque	This calibration does not apply for testing under this part; see § 1066.220.
40 CFR 1065.320: Fuel flow	This calibration does not apply for testing under this part.
40 CFR 1065.325: Intake flow	This calibration does not apply for testing under this part.
40 CFR 1065.340: CVS calibration	This calibration does not apply for CVS flow meters calibrated volumetrically as described in § 1066.140.
40 CFR 1065.345: Vacuum leak	Required upon initial installation of the sampling system; recommended within 35 days before the start of an emissions test and after maintenance such as pre-filter changes.
40 CFR 1065.350(c), 1065.355(c), 1065.370(c), and 1065.375(c).	These provisions do not apply for testing under this part; see § 1066.150.
40 CFR 1065.395: Inertial PM balance and weighing.	These verifications do not apply for testing under this part.

[a] Perform calibrations and verifications more frequently if needed to conform to the measurement system manufacturer's instructions and good engineering judgment.

§ 1066.137 Linearity verification.

This section describes requirements for linearity verification that are unique to testing under this part. (Note: see the definition of ''linearity'' in 40 CFR 1065.1001, where we explain that linearity means the degree to which measured values agree with respective reference values and that the term ''linearity'' is not used to refer to the shape of a measurement instrument's unprocessed response curve.) Perform other required or recommended calibration and verifications as described in 40 CFR 1065.307, with the exceptions noted in this section.

(a) For testing under this subpart, linearity verification under 40 CFR part 1065 is not required for speed, torque, fuel flow rate, or intake air flow.

(b) For gas analyzer linearity, use one of the following options:

(1) Use instrument manufacturer recommendations and good engineering judgment to select at least ten reference values, $y_{refi,}$ that cover the range of values that you expect during testing (to prevent extrapolation beyond the verified range during emission testing). We recommend selecting zero as one of your reference values. For each range calibrated, if the deviation from a least-squares best-fit straight line is 2% or less of the value at each data point, concentration values may be calculated by use of a single calibration factor for that range. If the deviation exceeds 2% at any point, use the best-fit nonlinear equation that represents the data to within 2% of each test point to determine concentration. If you use a gas divider to blend calibration gases, verify that the calibration curve produced names a calibration gas within 2% of its certified concentration. Perform this verification between 15 and 50% of the full scale analyzer range.

(2) Use the linearity requirements of 40 CFR 1065.307, except for CO_2 measurements used for determining fuel economy and GHG emissions for motor vehicles at or below 14,000 pounds GVWR. If you choose this linearity option, you must drift check and drift correct your emission data according to 40 CFR 1065.672.

(c) Perform linearity verifications for the following temperature measurements instead of those specified at 40 CFR 1065.307(e)(7):

(1) Test cell ambient air.

(2) Dilution air for PM sampling, including CVS, double-dilution, and partial-flow systems.

(3) PM sample.

(4) Chiller sample, for gaseous sampling systems that use thermal chillers to dry samples and that use chiller temperature to calculate dewpoint at the chiller outlet. For testing, if you choose to use the high alarm temperature setpoint for the chiller temperature as a constant value in determining the amount of water removed from the emission sample, you may verify the accuracy of the high alarm temperature setpoint using good engineering judgment without following the linearity verification for chiller temperature. We recommend that you input a simulated reference temperature signal below the alarm setpoint, increase this signal until the high alarm trips, and verify that the alarm setpoint value is no less than 2 °C below the reference value at the trip point.

(5) CVS inlet temperature.

(d) Perform linearity verifications for the following pressure measurements instead of those specified at 40 CFR 1065.307(e)(8):

(1) Exhaust back pressure.

(2) Barometric pressure.

(3) CVS inlet gage pressure or absolute pressure transducer.

(4) Sample dryer, for gaseous sampling systems that use either osmotic-membrane or thermal chillers to dry samples. For your testing, if you choose to use a low alarm pressure setpoint for the sample dryer pressure as a constant value in determining the amount of water removed from the emission sample, you may verify the accuracy of the low alarm pressure setpoint using good engineering judgment without following the linearity verification for sample dryer pressure. We recommend that you input a reference pressure signal above the alarm setpoint, decrease this signal until the low alarm trips, and verify that the alarm setpoint value is no more than 4 kPa above the reference value at the trip point.

(e) When following procedures or practices that we incorporate by reference in § 1066.1010, you must meet the linearity requirements given by the procedure or practice for any analytical instruments not covered under 40 CFR 1065.307, such as GC–FID or HPLC.

§ 1066.140 Diluted exhaust flow calibration.

(a) *Overview.* This section describes how to calibrate flow meters for diluted exhaust constant-volume sampling (CVS) systems. You may follow the molar flow calibration procedures in 40 CFR 1065.340 instead of the procedures in this section.

(b) *Scope and frequency.* Perform this calibration while the flow meter is installed in its permanent position, except as allowed in paragraph (c) of this section. Perform this calibration after you change any part of the flow

configuration upstream or downstream of the flow meter that may affect the flow-meter calibration. Perform this calibration upon initial CVS installation and whenever corrective action does not resolve a failure to meet the diluted exhaust flow verification (i.e., propane check) in 40 CFR 1065.341.

(c) *Ex-situ CFV and SSV calibration.* You may remove a CFV or SSV from its permanent position for calibration as long as the flow meter meets the requirements in 40 CFR 1065.340(c).

(d) *Reference flow meter.* Calibrate each CVS flow meter using a reference flow meter such as a subsonic venturi flow meter, a long-radius ASME/NIST flow nozzle, a smooth approach orifice, a laminar flow element, a set of critical flow venturis, or an ultrasonic flow meter. Use a reference flow meter that reports quantities that are NIST-traceable within ±1% uncertainty. Use this reference flow meter's response to flow as the reference value for CVS flow-meter calibration.

(e) *Configuration.* Calibrate the system with any upstream screens or other restrictions that will be used during testing and that could affect the flow ahead of the reference flow meter. You may not use any upstream screen or other restriction that could affect the flow ahead of the reference flow meter, unless the flow meter has been calibrated with such a restriction.

(f) *PDP calibration.* Calibrate each positive-displacement pump (PDP) to determine a flow-versus-PDP speed equation that accounts for flow leakage across sealing surfaces in the PDP as a function of PDP inlet pressure. Determine unique equation coefficients for each speed at which you operate the PDP. Calibrate a PDP flow meter as follows:

(1) Connect the system as shown in Figure 1 of this section.

(2) Leaks between the calibration flow meter and the PDP must be less than 0.3% of the total flow at the lowest calibrated flow point; for example, at the highest restriction and lowest PDP-speed point.

(3) While the PDP operates, maintain a constant temperature at the PDP inlet within ±2% of the mean absolute inlet temperature, $\overline{T}_{in}$.

(4) Set the PDP speed to the first speed point at which you intend to calibrate.

(5) Set the variable restrictor to its wide-open position.

(6) Operate the PDP for at least 3 min to stabilize the system. Continue operating the PDP and record the mean values of at least 30 seconds of sampled data of each of the following quantities:

(i) The mean flow rate of the reference flow meter, $\overline{\dot{Q}}_{ref}$. This may include several measurements of different quantities, such as reference meter pressures and temperatures, for calculating $\overline{\dot{Q}}_{ref}$.

(ii) The mean temperature at the PDP inlet, $\overline{T}_{in}$.

(iii) The mean static absolute pressure at the PDP inlet, $\overline{p}_{in}$.

(iv) The mean static absolute pressure at the PDP outlet, $\overline{p}_{out}$.

(v) The mean PDP speed, $\overline{f}_{nPDP}$.

(7) Incrementally close the restrictor valve to decrease the absolute pressure at the inlet to the PDP, p_{in}.

(8) Repeat the steps in paragraphs (e)(6) and (7) of this section to record data at a minimum of six restrictor positions ranging from the wide-open restrictor position to the minimum expected pressure at the PDP inlet.

(9) Calibrate the PDP by using the collected data and the equations in § 1066.650(a).

(10) Repeat the steps in paragraphs (e)(6) through (9) of this section for each speed at which you operate the PDP.

(11) Use the equations in § 1066.652(a) to determine the PDP flow equation for emission testing.

(12) Verify the calibration by performing a CVS verification (i.e., propane check) as described in 40 CFR 1065.341.

(13) Ensure that the lowest inlet pressure tested during calibration is at least as low as the lowest PDP inlet pressure that will occur during emission testing. You may not use the PDP below the lowest inlet pressure tested during calibration.

(g) *SSV calibration.* Calibrate each subsonic venturi (SSV) to determine its discharge coefficient, C_d, for the expected range of inlet pressures as follows:

(1) Configure your calibration system as shown in Figure 1 of this section.

(2) Verify that any leaks between the calibration flow meter and the SSV are less than 0.3% of the total flow at the highest restriction.

(3) Start the blower downstream of the SSV.

(4) While the SSV operates, maintain a constant temperature at the SSV inlet within ±2% of the mean absolute inlet temperature, $\overline{T}_{in}$.

(5) Set the variable restrictor or variable-speed blower to a flow rate greater than the greatest flow rate expected during testing. You may not extrapolate flow rates beyond calibrated values, so we recommend that you make sure the Reynolds number, $Re^{\#}$, at the SSV throat at the greatest calibrated flow rate is greater than the maximum $Re^{\#}$ expected during testing.

(6) Operate the SSV for at least 3 min to stabilize the system. Continue operating the SSV and record the mean of at least 30 seconds of sampled data of each of the following quantities:

(i) The mean flow rate of the reference flow meter, $\overline{\dot{Q}}_{ref}$. This may include several measurements of different quantities for calculating $\dot{Q}_{ref}$, such as reference meter pressures and temperatures.

(ii) The mean temperature at the venturi inlet, $\overline{T}_{in}$.

(iii) The mean static absolute pressure at the venturi inlet, $\overline{P}_{in}$.

(iv) Mean static differential pressure between the static pressure at the venturi inlet and the static pressure at the venturi throat, $\Delta\overline{P}_{ssv}$.

(7) Incrementally close the restrictor valve or decrease the blower speed to decrease the flow rate.

(8) Repeat the steps in paragraphs (g)(6) and (7) of this section to record data at a minimum of ten flow rates.

(9) Determine an equation to quantify C_d as a function of $Re^{\#}$ by using the collected data and the equations in § 1066.650(b). Section 1066.650 also includes statistical criteria for validating the C_d versus $Re^{\#}$ equation.

(10) Verify the calibration by performing a CVS verification (i.e., propane check) as described in 40 CFR 1065.341 using the C_d versus $Re^{\#}$ equation.

(11) Use the SSV only between the minimum and maximum calibrated flow rates. If you want to use the SSV at a higher or lower flow rate, you must recalibrate the SSV.

(12) Use the equations in § 1066.652(b) to determine SSV flow during a test.

(h) *CFV calibration.* The calibration procedure described in this paragraph (h) establishes the value of the calibration coefficient at measured values of pressure, temperature and air flow.

Calibrate a critical-flow venturi (CFV) to verify its calibration coefficient, K_v, at the lowest expected static differential pressure between the CFV inlet and outlet. Calibrate a CFV flow meter as follows:

(1) Configure your calibration system as shown in Figure 1 of this section.

(2) Verify that any leaks between the calibration flow meter and the CFV are less than 0.3% of the total flow at the highest restriction.

(3) Start the blower downstream of the CFV.

(4) While the CFV operates, maintain a constant temperature at the CFV inlet within ±2% of the mean absolute inlet temperature, $\overline{T}_{in}$.

(5) Set the variable restrictor to its wide-open position. Instead of a

variable restrictor, you may alternately vary the pressure downstream of the CFV by varying blower speed or by introducing a controlled leak. Note that some blowers have limitations on nonloaded conditions.

(6) Operate the CFV for at least 3 min to stabilize the system. Continue operating the CFV and record the mean values of at least 30 seconds of sampled data of each of the following quantities:

(i) The mean flow rate of the reference flow meter, $\overline{\dot{Q}}_{ref}$. This may include several measurements of different quantities, such as reference meter pressures and temperatures, for calculating $\overline{\dot{Q}}_{ref}$.

(ii) The mean temperature at the venturi inlet, $\overline{T}_{in}$.

(iii) The mean static absolute pressure at the venturi inlet, $\overline{p}_{in}$.

(iv) The mean static differential pressure between the CFV inlet and the CFV outlet, Δp_{CFV}.

(7) Incrementally close the restrictor valve or decrease the downstream pressure to decrease the differential pressure across the CFV, Δp_{CFV}.

(8) Repeat the steps in paragraphs (f)(6) and (7) of this section to record mean data at a minimum of ten restrictor positions, such that you test the fullest practical range of Δp_{CFV} expected during testing. We do not require that you remove calibration components or CVS components to calibrate at the lowest possible restriction.

(9) Determine K_v and the lowest allowable pressure ratio, *r,* according to § 1066.650.

(10) Use K_v to determine CFV flow during an emission test. Do not use the CFV below the lowest allowed *r,* as determined in § 1066.650.

(11) Verify the calibration by performing a CVS verification (i.e., propane check) as described in 40 CFR 1065.341.

(12) If your CVS is configured to operate multiple CFVs in parallel, calibrate your CVS using one of the following methods:

(i) Calibrate every combination of CFVs according to this section and § 1066.650(c). Refer to § 1065.652(c) for instructions on calculating flow rates for this option.

(ii) Calibrate each CFV according to this section and § 1066.650. Refer to § 1066.652 for instructions on calculating flow rates for this option.

(i) *Ultrasonic flow meter calibration.* [Reserved]

BILLING CODE P

Figure 1 of 1066.140—CVS calibration configurations.

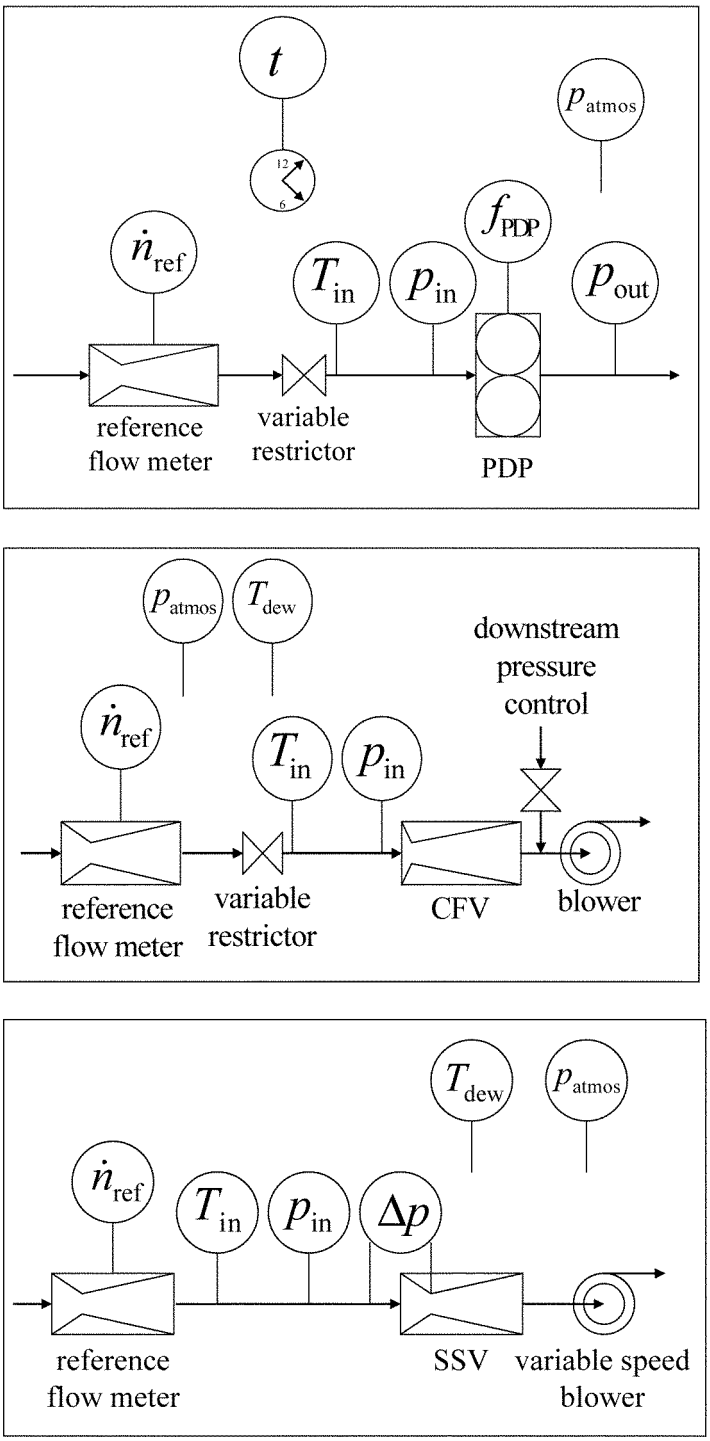

§ 1066.145 Test fuel, engine fluids, analytical gases, and other calibration standards.

(a) *Test fuel.* Use test fuel as specified in the standard-setting part, or as specified in 40 CFR part 1065, subpart H, if it is not specified in the standard-setting part.

(b) *Lubricating oil.* Use lubricating oil as specified in 40 CFR 1065.740. For two-stroke engines that involve a specified mixture of fuel and lubricating oil, mix the lubricating oil with the fuel according to the manufacturer's specifications.

(c) *Coolant.* For liquid-cooled engines, use coolant as specified in 40 CFR 1065.745.

(d) *Analytical gases.* Use analytical gases that meet the requirements of 40 CFR 1065.750.

(e) *Mass standards.* Use mass standards that meet the requirements of 40 CFR 1065.790.

§ 1066.150 Analyzer interference and quench verification limit.

Analyzers must meet the interference and quench verification limits in the following table on the lowest instrument range that will be used during emission testing, instead of those specified in 40 CFR part 1065, subpart D:

TABLE 1 OF § 1066.150–ANALYZER INTERFERENCE AND QUENCH VERIFICATION LIMITS

Verification	Limit
40 CFR 1065.350.	±2% of full scale.
40 CFR 1065.355.	±2% of full scale.
40 CFR 1065.370.	±2% of full scale.
40 CFR 1065.375.	±2% of the flow-weighted mean concentration of N_2O expected at the standard.

Subpart C—Dynamometer Specifications

§ 1066.201 Dynamometer overview.

This subpart addresses chassis dynamometers and related equipment.

§ 1066.210 Dynamometers.

(a) *General requirements.* A chassis dynamometer typically uses electrically generated load forces combined with its rotational inertia to recreate the mechanical inertia and frictional forces that a vehicle exerts on road surfaces (known as ''road load''). Load forces are calculated using vehicle-specific coefficients and response characteristics. The load forces are applied to the vehicle tires by rolls connected to motor/absorbers. The dynamometer uses a load cell to measure the forces the dynamometer rolls apply to the vehicle's tires.

(b) *Accuracy and precision.* The dynamometer's output values for road load must be NIST-traceable. We may determine traceability to a specific international standards organization to be sufficient to demonstrate NIST-traceability. The force-measurement system must be capable of indicating force readings as follows:

(1) For dynamometer testing of vehicles at or below 20,000 pounds GVWR, the dynamometer force-measurement system must be capable of indicating force readings during a test to a resolution of ±0.05% of the maximum load-cell force simulated by the dynamometer or ±9.8 N (±2.2 lbf), whichever is greater.

(2) For dynamometers testing of vehicles above 20,000 pounds GVWR the force-measurement system must be capable of indicating force readings during a test to a resolution of ±0.05% of the maximum load-cell force simulated by the dynamometer or ±39.2 N (±8.8 lbf), whichever is greater.

(c) *Test cycles.* The dynamometer must be capable of fully simulating vehicle performance over applicable test cycles for the vehicles being tested as referenced in the corresponding standard-setting part, including operation at the combination of inertial and road-load forces corresponding to maximum road load conditions and maximum simulated inertia at the highest acceleration rate experienced during testing.

(d) *Component requirements.* The following specifications apply:

(1) The nominal roll diameter must be 120 cm or greater. The dynamometer must have an independent drive roll for each drive axle as tested under § 1066.410(g), except that two drive axles may share a single drive roll. Use good engineering judgment to ensure that the dynamometer roll diameter is large enough to provide sufficient tire-roll contact area to avoid tire overheating and power losses from tire-roll slippage.

(2) Measure and record force and speed at 10 Hz or faster. You may convert measured values to 1-Hz, 2-Hz, or 5-Hz values before your calculations, using good engineering judgment.

(3) The load applied by the dynamometer simulates forces acting on the vehicle during normal driving according to the following equation:

$$FR_i = A + B \cdot v_i + C \cdot v_i^2 + M \cdot \frac{v_i - v_{i-1}}{t_i - t_{i-1}}$$

Eq. 1066.210-1

Where:

FR = total road-load force to be applied at the surface of the roll. The total force is the sum of the individual tractive forces applied at each roll surface.

i = a counter to indicate a point in time over the driving schedule. For a dynamometer operating at 10-Hz intervals over a 600-second driving schedule, the maximum value of i should be 6,000.

A = a vehicle-specific constant value representing the vehicle's frictional load in lbf or newtons. See subpart D of this part.

B = a vehicle-specific coefficient representing load from drag and rolling resistance, which are a function of vehicle speed, in lbf/mph or N·s/m. See subpart D of this part.

v = linear speed at the roll surfaces as measured by the dynamometer, in mph or m/s. Let $v_{i-1} = 0$ for $i = 0$.

C = a vehicle-specific coefficient representing aerodynamic effects, which are a function of vehicle speed squared, in lbf/mph^2 or N·s^2/m^2. See subpart D of this part.

M = mass of the vehicle in lbm or kg. For vehicles at or below 14,000 pounds GVWR, determine the vehicle's mass based on equivalent test weight (ETW) as specified in § 1066.810 and set dynamometer inertia simulation as specified in § 1066.410(h). For vehicles above 14,000 pounds GVWR, determine the vehicle's mass based on the test weight, taking into account the effect of rotating axles, as specified in § 1066.310(b)(7) and dividing the weight by the acceleration due to gravity as specified in 40 CFR 1065.630, consistent with good engineering judgment.

t = elapsed time in the driving schedule as measured by the dynamometer, in seconds. Let $t_{i-1} = 0$ for $i = 0$.

(4) We recommend that a dynamometer capable of testing vehicles at or below 20,000 pounds GVWR be designed to apply an actual road-load force within ±1% or ±9.8 N (±2.2 lbf) of the reference value, whichever is greater. Dynamometers that do not fully meet this specification may be used consistent with good engineering judgment. For example, slightly higher errors may be permissible during highly transient operation for vehicles above 8,500 pounds GVWR.

(e) *Dynamometer manufacturer instructions.* This part specifies that you follow the dynamometer manufacturer's recommended procedures for things such as calibrations and general operation. If you perform testing with a dynamometer that you manufactured or if you otherwise do not have these recommended procedures, use good engineering judgment to establish the additional procedures and specifications we specify in this part, unless we specify otherwise. Keep records to describe these recommended procedures and how they are consistent

with good engineering judgment, including any quantified error estimates.

§ 1066.215 Summary of verification and calibration procedures for chassis dynamometers.

(a) *Overview.* This section describes the overall process for verifying and calibrating the performance of chassis dynamometers.

(b) *Scope and frequency.* The following table summarizes the required and recommended calibrations and verifications described in this subpart and indicates when they must occur:

TABLE 1 OF § 1066.215—SUMMARY OF REQUIRED DYNAMOMETER CALIBRATIONS AND VERIFICATIONS

Type of calibration or verification	Minimum frequency [a]
§ 1066.220: Linearity verification	Speed: Upon initial installation, within 370 days before testing, and after major maintenance. Torque (load): Upon initial installation and after major maintenance.
§ 1066.225: Roll runout and diameter verification.	Upon initial installation and after major maintenance.
§ 1066.230: Time verification	Upon initial installation and after major maintenance.
§ 1066.235: Speed measurement verification	Upon initial installation, within 370 days before testing, and after major maintenance.
§ 1066.240: Torque (load) transducer verification.	Upon initial installation, within 7 days of testing, and after major maintenance.
§ 1066.245: Response time verification	Upon initial installation, within 370 days before testing, and after major maintenance.
§ 1066.250: Base inertia verification	Upon initial installation and after major maintenance.
§ 1066.255: Parasitic loss verification	Upon initial installation, after major maintenance, and upon failure of a verification in § 1066.270 or § 1066.280.
§ 1066.260: Parasitic friction compensation evaluation.	Upon initial installation, after major maintenance, and upon failure of a verification in § 1066.270 or § 1066.280.
§ 1066.265: Acceleration and deceleration verification.	Upon initial installation and after major maintenance.
§ 1066.270: Unloaded coastdown verification	Upon initial installation, within 7 days of testing, and after major maintenance.
§ 1066.280 Dynamometer readiness verification	Upon initial installation, within 1 day before testing, and after major maintenance.

[a] Perform calibrations and verifications more frequently, according to measurement system manufacturer instructions and good engineering judgment.

(c) *Automated dynamometer verifications and calibrations.* In some cases, dynamometers are designed with internal diagnostic and control features to accomplish the verifications and calibrations specified in this subpart. You may use these automated functions instead of following the procedures we specify in this subpart to demonstrate compliance with applicable requirements, consistent with good engineering judgment.

(d) *Sequence of verifications and calibrations.* Upon initial installation and after major maintenance, perform the verifications and calibrations in the same sequence as noted in Table 1 of this section, except that you may perform speed linearity verification after the verifications in §§ 1066.225 and 1066.230. At other times, you may need to perform specific verifications or calibrations in a certain sequence, as noted in this subpart. If you perform major maintenance on a specific component, you are required to perform verifications and calibrations only on components or parameters that are affected by the maintenance.

(e) *Corrections.* Unless the regulation directs otherwise, if the dynamometer fails to meet any specified calibration or verification, make any necessary adjustments or repairs such that the dynamometer meets the specification before running a test. Repairs required to meet specifications are generally considered major maintenance under this part.

§ 1066.220 Linearity verification for chassis dynamometer systems.

(a) *Scope and frequency.* Perform linearity verification for dynamometer speed and torque at least as frequently as indicated in Table 1 of § 1066.215. The intent of linearity verification is to determine that the system responds accurately and proportionally over the measurement range of interest. Linearity verification generally consists of introducing a series of at least 10 reference values to a measurement system. The measurement system quantifies each reference value. The measured values are then collectively compared to the reference values by using a least-squares linear regression and the linearity criteria specified in Table 1 of this section.

(b) *Performance requirements.* If a measurement system does not meet the applicable linearity criteria in Table 1 of this section, correct the deficiency by re-calibrating, servicing, or replacing components as needed. Repeat the linearity verification after correcting the deficiency to ensure that the measurement system meets the linearity criteria. Before you may use a measurement system that does not meet linearity criteria, you must demonstrate to us that the deficiency does not adversely affect your ability to demonstrate compliance with the applicable standards.

(c) *Procedure.* Use the following linearity verification protocol, or use good engineering judgment to develop a different protocol that satisfies the intent of this section, as described in paragraph (a) of this section:

(1) In this paragraph (c), the letter ''y'' denotes a generic measured quantity, the superscript over-bar denotes an arithmetic mean (such as $\bar{y}$), and the subscript ''$_{ref}$'' denotes the known or reference quantity being measured.

(2) Operate the dynamometer system at the specified operating conditions. This may include any specified adjustment or periodic calibration of the dynamometer system.

(3) Set dynamometer speed and torque to zero.

(4) Verify the dynamometer speed or torque signal based on the dynamometer manufacturer's recommendations.

(5) After verification, check for zero speed and torque. Use good engineering judgment to determine whether or not to rezero or re-verify speed and torque before continuing.

(6) For both speed and torque, use the dynamometer manufacturer's recommendations and good engineering judgment to select reference values, y_{refi}, that cover a range of values that you expect would prevent extrapolation beyond these values during emission testing. We recommend selecting zero

speed and zero torque as reference values for the linearity verification.

(7) Use the dynamometer manufacturer's recommendations and good engineering judgment to select the order in which you will introduce the series of reference values. For example, you may select the reference values randomly to avoid correlation with previous measurements and to avoid the influence of hysteresis; you may select reference values in ascending or descending order to avoid long settling times of reference signals; or you may select values to ascend and then descend to incorporate the effects of any instrument hysteresis into the linearity verification.

(8) Set the dynamometer to operate at a reference condition.

(9) Allow time for the dynamometer to stabilize while it measures the reference values.

(10) At a recording frequency of at least 1 Hz, measure speed and torque values for 30 seconds and record the arithmetic mean of the recorded values, $\bar{y}_i$. Refer to 40 CFR 1065.602 for an example of calculating an arithmetic mean.

(11) Repeat the steps in paragraphs (c)(8) though (10) of this section until you measure speeds and torques at each of the reference settings.

(12) Use the arithmetic means, $\bar{y}_i$, and reference values, y_{refi}, to calculate least-squares linear regression parameters and statistical values to compare to the minimum performance criteria specified in Table 1 of this section. Use the calculations described in 40 CFR 1065.602. Using good engineering judgment, you may weight the results of individual data pairs (i.e., (y_{refi}, $\bar{y}$), in the linear regression calculations. Table 1 follows:

TABLE 1 OF § 1066.220—DYNAMOMETER MEASUREMENT SYSTEMS THAT REQUIRE LINEARITY VERIFICATIONS

Measurement system	Quantity	Linearity criteria			
		$\lvert y_{min}(a_1 - 1) + a_0 \rvert$	a_1	SEE	r^2
Speed	v	<0.05% $\cdot v_{max}$	0.98–1.02	<2% $\cdot v_{max}$	>0.990
Torque (load)	T	<1% $\cdot T_{max}$	0.99–1.01	<1% $\cdot T_{max}$	>0.990

(d) *Reference signals.* Generate reference values for the linearity-verification protocol in paragraph (c) of this section as described for speed and torque in 40 CFR 1065.307(d).

§ 1066.225 Roll runout and diameter verification procedure.

(a) *Overview.* This section describes the verification procedure for roll runout and roll diameter. Roll runout is a measure of the variation in roll radius around the circumference of the roll.

(b) *Scope and frequency.* Perform these verifications upon initial installation and after major maintenance that could affect roll surface finish or dimensions (such as resurfacing or polishing).

(c) *Roll runout procedure.* Verify roll runout based on the following procedure, or an equivalent procedure based on good engineering judgment:

(1) Perform this verification with laboratory and dynamometer temperatures stable and at equilibrium. Release the roll brake and shut off power to the dynamometer. Remove any dirt, rubber, rust, and debris from the roll surface. Mark measurement locations on the roll surface using a nominally permanent marker. Mark the roll at a minimum of four equally spaced locations across the roll width; we recommend taking measurements every 150 mm across the roll. Secure the marker to the deck plate adjacent to the roll surface and slowly rotate the roll to mark a clear line around the roll circumference. Repeat this process for all measurement locations.

(2) Measure roll runout using an indicator with a probe that allows for measuring the position of the roll surface relative to the roll centerline as it turns through a complete revolution. The indicator must have some means of being securely mounted adjacent to the roll. The indicator must have sufficient range to measure roll runout at all points, with a minimum accuracy of ±0.025 mm. Calibrate the indicator according to the instrument manufacturer's instructions.

(3) Position the indicator adjacent to the roll surface at the desired measurement location. Position the shaft of the indicator perpendicular to the roll such that the point of the indicator is slightly touching the surface of the roll and can move freely through a full rotation of the roll. Zero the indicator according to the instrument manufacturer's instructions. Avoid distortion of the runout measurement from the weight of a person standing on or near the mounted dial indicator.

(4) Slowly turn the roll through a complete rotation and record the maximum and minimum values from the indicator. Calculate runout as the difference between these maximum and minimum values.

(5) Repeat the steps in paragraphs (c)(3) and (4) of this section for all measurement locations.

(6) The roll runout must be less than 0.254 mm (0.0100 inches) at all measurement locations.

(d) *Diameter procedure.* Verify roll diameter based on the following procedure, or an equivalent procedure based on good engineering judgment:

(1) Prepare the laboratory and the dynamometer as specified in paragraph (c)(1) of this section.

(2) Measure roll diameter using a Pi Tape®. Orient the Pi Tape® to the marker line at the desired measurement location with the Pi Tape® hook pointed outward. Temporarily secure the Pi Tape® to the roll near the hook end with adhesive tape. Slowly turn the roll, wrapping the Pi Tape® around the roll surface. Ensure that the Pi Tape® is flat and adjacent to the marker line around the full circumference of the roll. Attach a 2.26-kg weight to the hook of the Pi Tape® and position the roll so that the weight dangles freely. Remove the adhesive tape without disturbing the orientation or alignment of the Pi Tape®.

(3) Overlap the gage member and the vernier scale ends of the Pi Tape® to read the diameter measurement to the nearest 0.01 mm. Follow the manufacturer's recommendation to correct the measurement to 20 °C, if applicable.

(4) Repeat the steps in paragraphs (d)(2) and (3) of this section for all measurement locations.

(5) The measured roll diameter must be within ±0.254 mm of the specified nominal value at all measurement locations. You may revise the nominal value to meet this specification, as long as you use the corrected nominal value for all calculations in this subpart.

§ 1066.230 Time verification procedure.

(a) *Overview.* This section describes how to verify the accuracy of the dynamometer's timing device.

(b) *Scope and frequency.* Perform this verification upon initial installation and after major maintenance.

(c) *Procedure.* Perform this verification using one of the following procedures:

(1) *WWV method.* You may use the time and frequency signal broadcast by NIST from radio station WWV as the time standard if the trigger for the dynamometer timing circuit has a frequency decoder circuit, as follows:

(i) Contact station WWV by telephone by dialing (303) 499–7111 and listen for the time announcement. Verify that the trigger started the dynamometer timer. Use good engineering judgment to minimize error in receiving the time and frequency signal.

(ii) After at least 1000 seconds, re-dial station WWV and listen for the time announcement. Verify that the trigger stopped the dynamometer timer.

(iii) Compare the measured elapsed time, $y_{act,}$ to the corresponding time standard, $y_{ref,}$ to determine the time error, y_{error}, using the following equation:

$$y_{error} = \frac{y_{act} - y_{ref}}{y_{ref}} \cdot 100\ \%$$

Eq. 1066.230-1

(2) *Ramping method.* You may use an operator-defined ramp function to serve as the time standard as follows:

(i) Set up a signal generator to output a marker voltage at the peak of each ramp to trigger the dynamometer timing circuit. Output the designated marker voltage to start the verification period.

(ii) After at least 1000 seconds, output the designated marker voltage to end the verification period.

(iii) Compare the measured elapsed time between marker signals, $y_{act,}$ to the corresponding time standard, y_{ref}, to determine the time error, y_{error}, using Eq. 1066.230–1.

(3) *Dynamometer coastdown method.* You may use a signal generator to output a known speed ramp signal to the dynamometer controller to serve as the time standard as follows:

(i) Generate upper and lower speed values to trigger the start and stop functions of the coastdown timer circuit. Use the signal generator to start the verification period.

(ii) After at least 1000 seconds, use the signal generator to end the verification period.

(iii) Compare the measured elapsed time between trigger signals, $y_{act,}$ to the corresponding time standard, y_{ref}, to determine the time error, $y_{error,}$ using Eq. 1066.230–1.

(d) *Performance evaluation.* The time error determined in paragraph (c) of this section may not exceed ±0.001%.

§ 1066.235 Speed verification procedure.

(a) *Overview.* This section describes how to verify the accuracy of the dynamometer speed determination. When performing this verification, you must also verify the dynamometer speed at any devices used to display or record vehicle speed (for example a driver's aid) is representative of the speed input from the dynamometer speed determination.

(b) *Scope and frequency.* Perform this verification upon initial installation, within 370 days before testing, and after major maintenance.

(c) *Procedure.* Use one of the following procedures to verify the accuracy and resolution of the dynamometer speed simulation:

(1) *Pulse method.* Connect a universal frequency counter to the output of the dynamometer's speed-sensing device in parallel with the signal to the dynamometer controller. The universal frequency counter must be calibrated according to the counter manufacturer's instructions and be capable of measuring with enough accuracy to perform the procedure as specified in this paragraph (c)(1). Make sure the instrumentation does not affect the signal to the dynamometer control circuits. Determine the speed error as follows:

(i) Set the dynamometer to speed-control mode. Set the dynamometer speed to a value of approximately 4.5 m/s (10 mph); record the output of the frequency counter after 10 seconds. Determine the roll speed, $v_{act,}$ using the following equation:

$$v_{act} = \frac{f \cdot d_{roll} \cdot \pi}{n}$$

Eq. 1066.235-1

Where:

f = frequency of the dynamometer speed sensing device, accurate to at least four significant figures.

d_{roll} = nominal roll diameter, accurate to the nearest 1.0 mm, consistent with § 1066.225(d).

n = the number of pulses per revolution from the dynamometer roll speed sensor.

Example:

f = 2.9231 Hz = 2.9231 s^{-1}

d_{roll} = 904.40 mm = 0.90440 m

n = 1 pulse/rev

$$v_{act} = \frac{2.9231 \cdot 0.90440 \cdot \pi}{1}$$

v_{act} = 8.3053 m/s

(ii) Repeat the steps in paragraph (c)(1)(i) of this section for the maximum speed expected during testing and at least two additional evenly spaced speed points between the starting speed and the maximum speed point.

(iii) Compare the calculated roll speed, v_{act}, to each corresponding speed set point, v_{ref}, to determine values for speed error at each set point, v_{error}, using the following equation:

$$v_{error} = v_{act} - v_{ref}$$

Eq. 1066.235-2

Example:

v_{act} = 8.3053 m/s

v_{ref} = 8.3000 m/s

v_{error} = 8.3053 − 8.3000 = 0.0053 m/s

(2) *Frequency method.* Install a piece of tape in the shape of an arrowhead on the surface of the dynamometer roll near the outer edge. Put a reference mark on the deck plate in line with the tape. Install a stroboscope or photo tachometer on the deck plate and direct the flash toward the tape on the roll. The stroboscope or photo tachometer must be calibrated according to the instrument manufacturer's instructions and be capable of measuring with enough accuracy to perform the procedure as specified in this paragraph (c)(2). Determine the speed error as follows:

(i) Set the dynamometer to speed control mode. Set the dynamometer speed to a speed value of approximately 4.5 m/s (10 mph). Tune the stroboscope or photo tachometer until the signal matches the dynamometer roll speed. Record the frequency. Determine the roll speed, y_{act}, using Eq. 1066.235–1, using the stroboscope or photo tachometer's frequency for f.

(ii) Repeat the steps in paragraph (c)(2)(i) of this section for the maximum speed expected during testing and at least two additional evenly spaced speed points between the starting speed and the maximum speed point.

(iii) Compare the calculated roll speed, v_{act}, to each corresponding speed set point, v_{ref}, to determine values for speed error at each set point, y_{error}, using Eq. 1066.235–2.

(d) *Performance evaluation.* The speed error determined in paragraph (c) of this section may not exceed ±0.02 m/s at any speed set point.

§ 1066.240 Torque transducer verification.

Verify torque-measurement systems by performing the verifications described in §§ 1066.270 and 1066.280.

§ 1066.245 Response time verification.

(a) *Overview.* This section describes how to verify the dynamometer's response time to a tractive effort force step change.

(b) *Scope and frequency.* Perform this verification upon initial installation,

within 370 days before testing (i.e., annually), and after major maintenance.

(c) *Procedure.* Use the dynamometer's automated process to verify response time. You may perform this test either at two different inertia settings corresponding approximately to the minimum and maximum vehicle weights you expect to test or using base inertia and two acceleration rates that cover the range of acceleration rates experienced during testing (for example 0.5 and 8 mph/s). Use good engineering judgment to select road-load coefficients representing vehicles of the appropriate weight. Determine the dynamometer's settling response time, t_s, based on the point at which there are no measured results more than 10% above or below the final equilibrium value, as illustrated in Figure 1 of this section. The observed settling response time must be less than 100 milliseconds for each inertia setting.

Figure 1 of §1066.245—Example of a settling response time diagram.

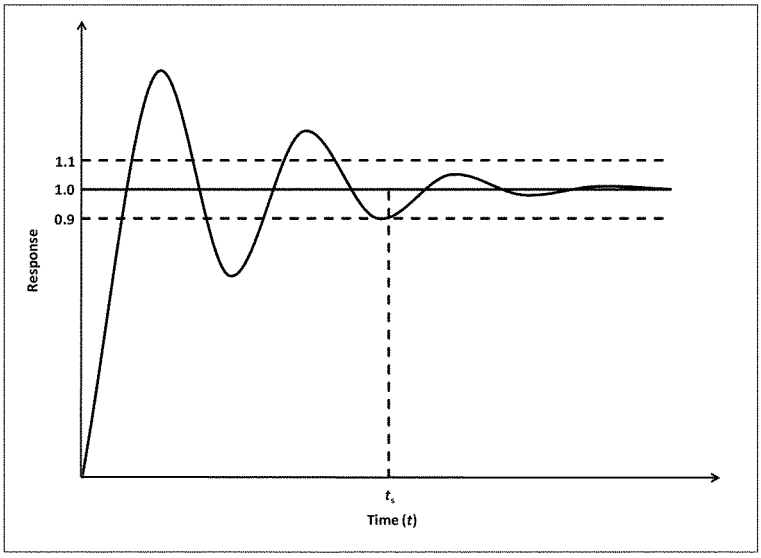

§ 1066.250 Base inertia verification.

(a) *Overview.* This section describes how to verify the dynamometer's base inertia.

(b) *Scope and frequency.* Perform this verification upon initial installation and after major maintenance (such as maintenance that could affect roll assembly inertia).

(c) *Procedure.* Verify the base inertia using the following procedure:

(1) Warm up the dynamometer according to the dynamometer manufacturer's instructions. Set the dynamometer's road-load inertia to zero, turning off any electrical simulation of road load and inertia so that the base inertia of the dynamometer is the only inertia present, and motor the rolls to 5 mph. Apply a constant force to accelerate the roll at a nominal rate of 1 mph/s. Measure the elapsed time to accelerate from 10 to 40 mph, noting the corresponding speed and time points to the nearest 0.01 mph and 0.01 s. Also determine average force over the measurement interval.

(2) Starting from a steady roll speed of 45 mph, apply a constant force to the roll to decelerate the roll at a nominal rate of 1 mph/s. Measure the elapsed time to decelerate from 40 to 10 mph, noting the corresponding speed and time points to the nearest 0.01 mph and 0.01 s. Also determine average force over the measurement interval.

(3) Repeat the steps in paragraphs (c)(1) and (2) of this section for a total of five sets of results at the nominal acceleration rate and the nominal deceleration rate.

(4) Use good engineering judgment to select two additional acceleration and deceleration rate pairs that cover the middle and upper rates expected during testing. Repeat the steps in paragraphs (c)(1) through (3) of this section at each of these additional acceleration and deceleration rates.

(5) Determine the base inertia, I_b, for each measurement interval using the following equation:

$$I_b = \frac{F}{\left|\frac{v_{final} - v_{initial}}{\Delta t}\right|}$$

Eq. 1066.250-1

Where:

F = average dynamometer force over the measurement interval as measured by the dynamometer.

v_{final} = roll surface speed at the end of the measurement interval to the nearest 0.01 mph.

$v_{initial}$ = roll surface speed at the start of the measurement interval to the nearest 0.01 mph.

$\Delta t \leq$ = elapsed time during the measurement interval to the nearest 0.01 s.

Example:

F = 1.500 lbf = 48.26 ft·lbm/s²

v_{final} = 40.00 mph = 58.67 ft/s

$v_{initial}$ = 10.00 mph = 14.67 ft/s

$\Delta t \leq$ = 30.00 s

$$I_b = \frac{48.26}{\left|\frac{58.67 - 14.67}{30.00}\right|}$$

I_b = 32.90 lbm

(6) Calculate the base inertia error, I_{berror}, for each of the thirty measured base inertia values, I_b, by comparing it to the manufacturer's stated base inertia, I_{bref}, using the following equation:

$$I_{berror} = \frac{I_{bref} - I_{bact}}{I_{bref}} \cdot 100\ \%$$

Eq. 1066.250-2

Example:

I_{bref} = 32.96 lbm

I_{bact} = 32.90 lbm (from paragraph (c)(5) of this section)

$$I_{\text{berror}} = \frac{32.96 - 32.90}{32.96} \cdot 100\ \%$$

$I_{\text{berror}} = 0.18\%$

(7) Determine the base inertia arithmetic mean value, $\bar{I}_b$, from the ten acceleration and deceleration interval base inertia values for each of the three acceleration/deceleration rates. Then determine the base inertia arithmetic mean value, $\bar{I}_b$, from the three acceleration/deceleration rate mean base inertia values. Calculate base inertia mean values as described in 40 CFR 1065.602(b).

(8) Calculate the inertia error for the final mean base inertia value from paragraph (c)(7) of this section. Use Eq. 1066.250–2, substituting the final mean base inertia value from paragraph (c)(7) of this section for the individual base inertia.

(d) *Performance evaluation.* The dynamometer must meet the following specifications to be used for testing under this part:

(1) All base inertia errors determined under paragraph (c)(6) of this section may not exceed ±1.0%.

(2) The mean base inertia error determined under paragraph (c)(8) of this section may not exceed ±0.20%.

§ 1066.255 Parasitic loss verification.

(a) *Overview.* Verify the dynamometer's parasitic loss as described in this section, and correct as necessary. This procedure determines the dynamometer's internal losses that it must overcome to simulate road load. Characterize these losses in a parasitic loss curve that the dynamometer uses to apply compensating forces to maintain the desired road-load force at the roll surface.

(b) *Scope and frequency.* Perform this verification upon initial installation, after major maintenance, and upon failure of a verification in either § 1066.270 or § 1066.280.

(c) *Procedure.* Perform this verification by following the dynamometer manufacturer's specifications to establish a parasitic loss curve, taking data at fixed speed intervals to cover the range of vehicle speeds that will occur during testing. You may zero the load cell at a selected speed if that improves your ability to determine the parasitic loss. Parasitic loss forces may never be negative. Note that the torque transducers must be zeroed and spanned prior to performing this procedure.

(d) *Performance evaluation.* Some dynamometers automatically updates the parasitic loss curve for further testing. If this is not the case, compare the new parasitic loss curve to the original parasitic loss curve from the dynamometer manufacturer or the most recent parasitic loss curve you programmed into the dynamometer. You may reprogram the dynamometer to accept the new curve in all cases, and you must reprogram the dynamometer if any point on the new curve departs from the earlier curve by more than ±9.0 N for dynamometers capable of testing vehicles at or below 20,000 pounds GVWR or ±36.0 N (±8.0 lbf) for dynamometers not capable of testing vehicles at or below 20,000 pounds GVWR.

§ 1066.260 Parasitic friction compensation evaluation.

(a) *Overview.* This section describes how to verify the accuracy of the dynamometer's friction compensation.

(b) *Scope and frequency.* Perform this verification upon initial installation, after major maintenance, and upon failure of a verification in either § 1066.270 or § 1066.280. Note that this procedure relies on proper calibration of speed and torque, as described in §§ 1066.235 and 1066.240. You must also first verify the dynamometer's parasitic loss curve as specified in § 1066.255.

(c) *Procedure.* Use the following procedure to verify the accuracy of the dynamometer's friction compensation:

(1) Warm up the dynamometer as specified by the dynamometer manufacturer.

(2) Perform a torque verification as specified by the dynamometer manufacturer. For torque verifications relying on shunt procedures, if the results do not conform to specifications, recalibrate the dynamometer using NIST-traceable standards as appropriate until the dynamometer passes the torque verification. Do not change the dynamometer's base inertia to pass the torque verification.

(3) Set the dynamometer inertia to the base inertia with the road-load coefficients A, B, and C set to 0. Set the dynamometer to speed-control mode with a target speed of 50 mph or a higher speed recommended by the dynamometer manufacturer. Once the speed stabilizes at the target speed, switch the dynamometer from speed control to torque control and allow the roll to coast for 60 seconds. Record the initial and final speeds and the corresponding start and stop times. If friction compensation is executed perfectly, there will be no change in speed during the measurement interval.

(4) Calculate the power equivalent of friction compensation error, FC_{error}, using the following equation:

$$FC_{\text{error}} = \frac{I}{2 \cdot t} \cdot \left(v_{\text{init}}^2 - v_{\text{final}}^2\right)$$

Eq. 1066.260-1

Where:

I = dynamometer inertia setting.

t = duration of the measurement interval, accurate to at least 0.01 s.

v_{init} = the roll speed corresponding to the start of the measurement interval, accurate to at least 0.05 mph.

v_{final} = the roll speed corresponding to the end of the measurement interval, accurate to at least 0.05 mph.

Example:

I = 2000 lbm = 62.16 lbf· s²/ft

t = 60.0 s

v_{init} = 9.2 mph = 13.5 ft/s

v_{final} = 10.0 mph = 14.7 ft/s

$$FC_{\text{error}} = \frac{62.16}{2 \cdot 60.00} \cdot \left(13.5^2 - 14.7^2\right)$$

FC_{error} = –16.5 ft·lbf/s = – 0.031 hp

(5) The friction compensation error may not exceed ±0.15 hp for dynamometers capable of testing vehicles at or below 20,000 pounds GVWR, or ±0.6 hp for dynamometers not capable of testing vehicles at or below 20,000 pounds GVWR.

§ 1066.265 Acceleration and deceleration verification.

(a) *Overview.* This section describes how to verify the dynamometer's ability to achieve targeted acceleration and deceleration rates. Paragraph (c) of this section describes how this verification applies when the dynamometer is programmed directly for a specific acceleration or deceleration rate. Paragraph (d) of this section describes how this verification applies when the dynamometer is programmed with a calculated force to achieve a targeted acceleration or deceleration rate.

(b) *Scope and frequency.* Perform this verification or an equivalent procedure upon initial installation and after major maintenance that could affect acceleration and deceleration accuracy. Note that this procedure relies on proper calibration of speed as described in § 1066.235.

(c) *Verification of acceleration and deceleration rates.* Activate the dynamometer's function generator for measuring roll revolution frequency. If the dynamometer has no such function generator, set up a properly calibrated external function generator consistent with the verification described in this paragraph (c). Use the function generator to determine actual acceleration and deceleration rates as the dynamometer traverses speeds between 10 and 40 mph at various

nominal acceleration and deceleration rates. Verify the dynamometer's acceleration and deceleration rates as follows:

(1) Set up start and stop frequencies specific to your dynamometer by identifying the roll-revolution frequency, *f,* in revolutions per second (or Hz) corresponding to 10 mph and 40 mph vehicle speeds, accurate to at least four significant figures, using the following equation:

$$f = \frac{v \cdot n}{d_{\text{roll}} \cdot \pi}$$

Eq. 1066.265-1

Where:

v = the target roll speed, in inches per second (corresponding to drive speeds of 10 mph or 40 mph).

n = the number of pulses from the dynamometer's roll-speed sensor per roll revolution.

d_{roll} = roll diameter, in inches.

(2) Program the dynamometer to accelerate the roll at a nominal rate of 1 mph/s from 10 mph to 40 mph. Measure the elapsed time to reach the target speed, to the nearest 0.01 s. Repeat this measurement for a total of five runs. Determine the actual acceleration rate for each run, a_{act}, using the following equation:

$$a_{\text{act}} = \frac{v_{\text{final}} - v_{\text{init}}}{t}$$

Eq. 1066.265-2

Where:

a_{act} = acceleration rate (decelerations have negative values).

v_{final} = the target value for the final roll speed.

v_{init} = the setpoint value for the initial roll speed.

t = time to accelerate from v_{init} to $v_{\text{final.}}$

Example:

v_{final} = 40 mph

v_{init} = 10 mph

t = 30.003 s

$$a_{\text{act}} = \frac{40.00 - 10.00}{30.03}$$

a_{act} = 0.999 mph/s

(3) Program the dynamometer to decelerate the roll at a nominal rate of 1 mph/s from 40 mph to 10 mph. Measure the elapsed time to reach the target speed, to the nearest 0.01 s. Repeat this measurement for a total of five runs. Determine the actual acceleration rate, a_{act}, using Eq. 1066.265–2

(4) Repeat the steps in paragraphs (c)(2) and (3) of this section for additional acceleration and deceleration rates in 1 mph/s increments up to and including one increment above the maximum acceleration rate expected during testing. Average the five repeat runs to calculate a mean acceleration rate, $\bar{a}_{\text{act}}$, at each setting.

(5) Compare each mean acceleration rate, $\bar{a}_{\text{act}}$, to the corresponding nominal acceleration rate, a_{ref}, to determine values for acceleration error, a_{error}, using the following equation:

$$a_{\text{error}} = \frac{\bar{a}_{\text{act}} - a_{\text{ref}}}{a_{\text{ref}}} \cdot 100\ \%$$

Eq. 1066.265-3

Example:

$\bar{a}_{\text{act>}}$ = 0.999 mph/s

a_{ref} = 1 mph/s

$$a_{\text{error}} = \frac{0.999 - 1}{1} \cdot 100\ \%$$

$a_{\text{error}} = -0.100\%$

(d) *Verification of forces for controlling acceleration and deceleration.* Program the dynamometer with a calculated force value and determine actual acceleration and deceleration rates as the dynamometer traverses speeds between 10 and 40 mph at various nominal acceleration and deceleration rates. Verify the dynamometer's ability to achieve certain acceleration and deceleration rates with a given force as follows:

(1) Calculate the force setting, *F,* using the following equation:

$$F = I_{\text{b}} \cdot |a|$$

Eq. 1066.265-4

Where:

I_{b} = the dynamometer manufacturer's stated base inertia, in lbf·s$_2$/ft.

a = nominal acceleration rate, in ft/s^2.

Example:

I_{b} = 2967 lbm = 92.217 lbf· s^2/ft

a = 1 mph/s = 1.4667 ft/s^2

F= 92.217 · | 1.4667|

F = 135.25 lbf

(2) Set the dynamometer to road-load mode and program it with a calculated force to accelerate the roll at a nominal rate of 1 mph/s from 10 mph to 40 mph. Measure the elapsed time to reach the target speed, to the nearest 0.01 s. Repeat this measurement for a total of five runs. Determine the actual acceleration rate, a_{act}, for each run using Eq. 1066.265–2. Repeat this step to determine measured ''negative acceleration'' rates using a calculated force to decelerate the roll at a nominal rate of 1 mph/s from 40 mph to 10 mph. Average the five repeat runs to calculate a mean acceleration rate, $\bar{a}_{\text{act}}$, at each setting.

(3) Repeat the steps in paragraph (d)(2) of this section for additional acceleration and deceleration rates as specified in paragraph (c)(4) of this section.

(4) Compare each mean acceleration rate, $\bar{a}_{\text{act}}$, to the corresponding nominal acceleration rate, $a_{\text{ref,}}$ to determine values for acceleration error, $a_{\text{error,}}$ using Eq. 1066.265–3

(e) *Performance evaluation.* The acceleration error from paragraphs (c)(5) and (d)(4) of this section may not exceed ±1.0%.

§ 1066.270 Unloaded coastdown verification.

(a) *Overview.* Use force measurements to verify the dynamometer's settings based on coastdown procedures.

(b) *Scope and frequency.* Perform this verification upon initial installation, within 7 days of testing, and after major maintenance.

(c) *Procedure.* This procedure verifies the dynamometer's settings derived from coastdown testing. For dynamometers that have an automated process for this procedure, perform this evaluation by setting the initial speed, final speed, inertial coefficients, and road-load coefficients as required for each test, using good engineering judgment to ensure that these values properly represent in-use operation. Use the following procedure if your dynamometer does not perform this verification with an automated process:

(1) Warm up the dynamometer as specified by the dynamometer manufacturer.

(2) With the dynamometer in coastdown mode, set the dynamometer inertia for the smallest vehicle weight that you expect to test and set A, B, and C road-load coefficients to values typical of those used during testing. Program the dynamometer to coast down over the dynamometer operational speed range (typically from a speed of 80 mph through a minimum speed at or below 10 mph). Perform at least one coastdown over this speed range, collecting data over each 10 mph interval.

(3) Repeat the steps in paragraph (c)(2) of this section with the dynamometer inertia and road-load coefficients set for the largest vehicle weight that you expect to test.

(4) Determine the average coastdown force, *F,* for each speed and inertia setting for each of the coastdowns performed using the following equation:

$$F = \frac{I \cdot (v_{init} - v_{final})}{t}$$

Eq. 1066.270-1

Where:

F = the average force measured during the coastdown for each speed interval and inertia setting, expressed in lbf· s²/ft and rounded to four significant figures.

I = the dynamometer's inertia setting, in lbf· s²/ft.

v_{init} = the speed at the start of the coastdown, expressed in ft/s and rounded to four significant figures.

v_{final} = the speed at the end of the coastdown interval, rounded to four significant figures.

t = coastdown time for each speed and inertia setting, accurate to at least 0.01 s.

Example:

I = 2000 lbm = 65.17 lbf · s²/ft

v_{init} = 25 mph = 36.66 ft/s

v_{final} = 15 mph = 22.0 ft/s

t = 5.00 s

$$F = \frac{65.17 \cdot (36.66 - 22.0)}{5.00}$$

F = 191.1 lbf

(5) Calculate the target value of coastdown force, F_{ref}, based on the applicable dynamometer parameters for each speed and inertia setting.

(6) Compare the mean value of the coastdown force measured for each speed and inertia setting, $\bar{F}_{act}$, to the corresponding F_{ref} to determine values for coastdown force error, F_{error}, using the following equation:

$$F_{error} = \left| \frac{\bar{F}_{act} - F_{ref}}{F_{ref}} \right| \cdot 100\ \%$$

Eq. 1066.270-2

Example:

F_{ref} = 192 lbf

$\bar{F}_{act}$ = 191 lbf

$$F_{error} = \left| \frac{191 - 192}{192} \right| \cdot 100\ \%$$

F_{error} = 0.5%

(d) *Performance evaluation.* The coastdown force error determined in paragraph (c) of this section may not exceed the following:

(1) For vehicles at or below 20,000 pounds GVWR, calculate $F_{errormax}$ from the following formula:

$$F_{errormax}\ (\%) = (2.2\ \text{lbf}/F_{ref}) \cdot 100$$

Eq. 1066.270-3

Example:

F_{ref} = 192 lbf

$F_{errormax}$ (%) = (2.2/192)·100 = 1.14%

(2) For vehicles above 20,000 pounds GVWR, the maximum allowable error, $F_{errormax}$, for all speed and inertia settings is ±1.0% or ±39.2 N, whichever is greater.

(e) If the dynamometer is not able to meet this requirement, diagnose and repair the dynamometer before continuing with emission testing. Diagnosis should include performing the verifications in § 1066.255 and § 1066.260.

§ 1066.280 Daily dynamometer readiness verification.

(a) *Overview.* This section describes how to verify that the dynamometer is ready for emission testing.

(b) *Scope and frequency.* Perform this verification upon initial installation, within 1 day before testing, and after major maintenance.

(c) *Procedure.* For dynamometers that have an automated process for this verification procedure, perform this evaluation by setting the initial speed and final speed and the inertial and road-load coefficients as required for the test, using good engineering judgment to ensure that these values properly represent in-use operation. Use the following procedure if your dynamometer does not perform this verification with an automated process:

(1) With the dynamometer in coastdown mode, set the dynamometer inertia to the base inertia with the road-load coefficient A set to 20 lbf (or a force that results in a coastdown time of less than 10 minutes) and coefficients B and C set to 0. Program the dynamometer to coast down for one 10 mph interval from 55 mph down to 45 mph. If your dynamometer is not capable of performing one discrete coastdown, then coast down with preset 10 mph intervals that include a 55 mph to 45 mph interval.

(2) Perform the coastdown.

(3) Determine the coastdown force and coastdown force error using Eqs. 1066.270–1 and 1066.270–2.

(d) *Performance evaluation.* The coastdown force error determined in paragraph (c) of this section may not exceed the following:

(1) For vehicles at or below 20,000 pounds GVWR, ±1.0% or ±9.8 N (±2.2 lbf), whichever is greater.

(2) For vehicles above 20,000 pounds GVWR, ±1.0% or ±39.2 N (±8.8 lbf), whichever is greater.

(e) If the verification results fail to meet the performance criteria in paragraph (d) of this section, perform the procedure up to two additional times. If the dynamometer is consistently unable to meet the performance criteria, diagnose and repair the dynamometer before continuing with emission testing. Diagnosis should include performing the verifications in § 1066.255 and § 1066.260.

§ 1066.290 Driver's aid.

Use good engineering judgment to provide a driver's aid that facilitates compliance with the requirements of § 1066.430. Verify the speed accuracy of the driver's aid as described in § 1066.235.

Subpart D—Coastdown

§ 1066.301 Overview of coastdown procedures.

(a) The coastdown procedures described in this subpart are used to determine the load coefficients (A, B, and C) for the simulated road-load equation in § 1066.210(d)(3).

(b) The general procedure for performing coastdown tests and calculating load coefficients is described in SAE J1263 and SAE J2263 (incorporated by reference in § 1066.1010). This subpart specifies certain deviations from those procedures for certain applications.

(c) Use good engineering judgment for all aspects of coastdown testing. For example, minimize the effects of grade by performing coastdown testing on reasonably level surfaces and determining coefficients based on average values from vehicle operation in opposite directions over the course.

§ 1066.305 Coastdown procedures for motor vehicles at or below 14,000 pounds GVWR.

For motor vehicles at or below 14,000 pounds GVWR, develop representative road-load coefficients to characterize each test vehicle. Calculate road-load coefficients by performing coastdowns using the provisions of SAE J1263 and SAE J2263 (incorporated by reference in § 1066.1010). Perform coastdowns at a starting speed as specified in SAE J2263, or at the highest speed from the range of applicable duty cycles. Use the same road-load coefficients for all duty cycles. However, if your test conditions are substantially different from the conditions represented by your road-load coefficients, such as cold-temperature testing, you may use good engineering judgment to develop separate road-load coefficients.

§ 1066.310 Coastdown procedures for vehicles above 14,000 pounds GVWR.

This section describes coastdown procedures that are unique to vehicles

above 14,000 pounds GVWR. These procedures are valid for calculating road-load coefficients for chassis and post-transmission powerpack testing and for calculating drag area (C_DA) for use in the GEM simulation tool under 40 CFR part 1037.

(a) Determine load coefficients by performing a minimum of 16 valid coastdown runs (8 in each direction).

(b) Follow the provisions of Sections 1 through 9 of SAE J1263, and SAE J2263 (incorporated by reference in § 1066.1010), except as described in this paragraph (b). The terms and variables identified in this paragraph (b) have the meaning given in SAE J1263 or J2263 unless specified otherwise.

(1) The test condition specifications of SAE J1263 apply except as follows for wind and road conditions:

(i) We recommend that you do not perform coastdown testing on days for which winds are forecast to exceed 6.0 mph.

(ii) The grade of the test track or road must not be excessive (considering factors such as road safety standards and effects on the coastdown results). Road conditions should follow Section 7.4 of SAE J1263, except that road grade may exceed 0.5%. If road grade is greater than 0.02% over the length of the test surface, then the road grade as a function of distance along the length of the test surface must be incorporated into the analysis. To calculate the force due to grade use Section 11.5 of SAE J2263.

(2) Operate the vehicle at a top speed above 70 mph, or at its maximum achievable speed if it cannot reach 70 mph. If a vehicle is equipped with a vehicle speed limiter that is set for a maximum speed below 70 mph, you must disable the vehicle speed limiter. Start the test at or above 70 mph or at the vehicle's maximum achievable speed if it cannot reach 70 mph. Collect data through a minimum speed at or below 15 mph. Data analysis for valid coastdown runs must include a maximum speed as described in this paragraph (b)(2) and a minimum speed of 15 mph.

(3) Gather data regarding wind speed and direction, in coordination with time-of-day data, using at least one stationary electro-mechanical anemometer and suitable data loggers meeting the specifications of SAE J1263, as well as the following additional specifications for the anemometer placed adjacent to the test surface:

(i) Calibrate the equipment by running the zero-wind and zero-angle calibrations within 24 hours before conducting the coastdown procedures. If the coastdown procedures are not complete 24 hours after calibrating the equipment, repeat the calibration for another 24 hours of data collection.

(ii) Record the location of the anemometer using a GPS measurement device adjacent to the test surface (approximately) at the midway distance along the test surface used for coastdowns.

(iii) Position the anemometer such that it will be at least 2.5 but not more than 3.0 vehicle widths from the test vehicle's centerline as the test vehicle passes the location of that anemometer.

(iv) Mount the anemometer at a height that is within 6 inches of half the test vehicle's maximum height.

(v) Place the anemometer at least 50 feet from the nearest tree and at least 25 feet from the nearest bush (or equivalent roadside features).

(vi) The height of the grass surrounding the stationary anemometer may not exceed 10% of the anemometer's mounted height, within a radius equal to the anemometer's mounted height.

(4) You may split runs as per Section 9.3.1 of SAE J2263, but we recommend whole runs. If you split a run, analyze each portion separately, but count the split runs as one run with respect to the minimum number of runs required.

(5) You may perform consecutive runs in a single direction, followed by consecutive runs in the opposite direction, consistent with good engineering judgment. Harmonize starting and stopping points to the extent practicable to allow runs to be paired.

(6) All valid coastdown run times in each direction must be within 2.0 standard deviations of the mean of the valid coastdown run times (from 70 mph down to 15 mph) in that direction. Eliminate runs outside this range. After eliminating these runs you must have at least eight valid runs in each direction. You may use coastdown run times that do not meet these standard deviation requirements if we approve it in advance. In your request, describe why the vehicle is not able to meet the specified standard deviation requirements and propose an alternative set of requirements.

(7) Analyze data for chassis and post-transmission powerpack testing or for use in the GEM simulation tool as follows:

(i) Follow the procedures specified in Section 10 of SAE J1263 or Section 11 of SAE J2263 to calculate coefficients for chassis and post-transmission powerpack testing.

(ii) Determine drag area, C_DA as follows instead of using the procedure specified in Section 10 of SAE J1263:

(A) Measure vehicle speed at fixed intervals over the coastdown run (generally at 10 Hz), including speeds at or above 15 mph and at or below 70 mph. Establish the height or altitude corresponding to each interval as described in SAE J2263 if you need to incorporate the effects of road grade.

(B) Calculate the vehicle's effective mass, M_e, in kg by adding 56.7 kg to the measured vehicle mass for each tire making road contact. This accounts for the rotational inertia of the wheels and tires.

(C) Calculate the road-load force for each measurement interval, F_i, for values of $i \geq 1$ using the following equation:

$$F_i = -M_e \cdot \frac{v_i - v_{i-1}}{\Delta t}$$

Eq. 1066.310-1

Where:

M_e = the vehicle's effective mass, expressed to at least the nearest 0.1 kg.

v = vehicle speed at the beginning and end of the measurement interval.

Δt = elapsed time over the measurement interval, in seconds.

(D) Plot the data from all the coastdown runs on a single plot of F_i vs. v_i^2 to determine the slope correlation, D, based on the following equation:

$$F_i - M_e g \frac{\Delta h}{\Delta s} = A_m + D v_i^2$$

Eq. 1066.310-2

Where:

g = gravitational acceleration = 9.81 m/s^2.

Δh = change in height or altitude over the measurement interval, in m. Assume $\Delta h = 0$ if you are not correcting for grade.

Δs = distance the vehicle travels down the road during the measurement interval, in m.

A_m = the calculated value of the y-intercept based on the curve-fit.

(E) Calculate drag area, C_DA, in m^2 using the following equation:

$$C_D A = \frac{2 \cdot D_{adj}}{\rho}$$

Eq. 1066.310-3

Where:

ρ = air density at reference conditions = 1.17 kg/m^3.

$$D_{adj} = D \cdot \left(\frac{\overline{T}}{293} \right) \cdot \left(\frac{98.21}{\overline{p}_B} \right)$$

Eq. 1066.310-4

$\bar{T}_b$,= average ambient absolute temperature during testing, in K.
$\bar{P}_b$,= average ambient pressuring during the test, in kPa.

(8) Determine the A, B, and C coefficients identified in § 1066.210 as follows:

(i) For chassis and post-transmission powerpack testing, follow the procedures specified in Section 10 of SAE J1263 or Section 12 of SAE J2263.

(ii) For the GEM simulation tool, use the following values:

A = A_m
B = 0
C = D_{adj}

§ 1066.320 Dynamometer road-load setting.

Determine dynamometer road-load settings for chassis testing by following SAE J2264 (incorporated by reference in § 1066.1010).

Subpart E— Preparing Vehicles and Running an Exhaust Emission Test

§ 1066.401 Overview.

(a) Use the procedures detailed in this subpart to measure vehicle emissions over a specified drive schedule. Different procedures may apply for criteria pollutants and greenhouse gas emissions as described in subpart I of this part or the standard-setting part. This subpart describes how to:

(1) Determine road-load power, test weight, and inertia class.

(2) Prepare the vehicle, equipment, and measurement instruments for an emission test.

(3) Perform pre-test procedures to verify proper operation of certain equipment and analyzers and to prepare them for testing.

(4) Record pre-test data.

(5) Sample emissions.

(6) Record post-test data.

(7) Perform post-test procedures to verify proper operation of certain equipment and analyzers.

(8) Weigh PM samples.

(b) The overall test generally consists of prescribed sequences of fueling, parking, and driving at specified test conditions. An exhaust emission test generally consists of measuring emissions and other parameters while a vehicle follows the drive schedules specified in the standard-setting part. There are two general types of test cycles:

(1) *Transient cycles.* Transient test cycles are typically specified in the standard-setting part as a second-by-second sequence of vehicle speed commands. Operate a vehicle over a transient cycle such that the speed follows the target values. Proportionally sample emissions and other parameters and use the calculations in 40 CFR part 1065, subpart G, or subpart G of this part to calculate emissions. The standard-setting part may specify three types of transient testing based on the approach to starting the measurement, as follows:

(i) A cold-start transient cycle where you start to measure emissions just before starting an engine that has not been warmed up.

(ii) A hot-start transient cycle where you start to measure emissions just before starting a warmed-up engine.

(iii) A hot running transient cycle where you start to measure emissions after an engine is started, warmed up, and running.

(2) *Cruise cycles.* Cruise test cycles are typically specified in the standard-setting part as a discrete operating point that has a single speed command.

(i) Start a cruise cycle as a hot running test, where you start to measure emissions after the engine is started and warmed up and the vehicle is running at the target test speed.

(ii) Sample emissions and other parameters for the cruise cycle in the same manner as a transient cycle, with the exception that the reference speed value is constant. Record instantaneous and mean speed values over the cycle.

§ 1066.407 Vehicle preparation and preconditioning.

Prepare the vehicle for testing (including measurement of evaporative and refueling emissions, as required) as described in the standard-setting part.

§ 1066.410 Dynamometer test procedure.

(a) Dynamometer testing may consist of multiple drive cycles with both cold-start and hot-start portions, including prescribed soak times before each test interval. The standard-setting part identifies the driving schedules and the associated sample intervals, soak periods, engine startup and shutdown procedures, and operation of accessories, as applicable. Not every test interval includes all these elements.

(b) Place the vehicle onto the dynamometer without starting the engine (for cold-start test cycles) or drive the vehicle onto dynamometer (for hot-start and hot-running cycles only) and position a fan that directs cooling air to the vehicle during dynamometer operation as described in this paragraph (b). This generally requires squarely positioning the fan in front of the vehicle and directing the airflow to the vehicle's radiator. Use good engineering judgment to design and configure fans to cool the test vehicle in a way that properly simulates in-use operation, consistent with the specifications of § 1066.105. Except for the following special cases, use a road-speed modulated fan meeting the requirements of § 1066.105(c)(2) or (d) that is placed within 90 cm of the front of the vehicle and ensure that the engine compartment cover is closed:

(1) For SC03 and AC17 testing, use a road-speed modulated fan meeting the requirements of § 1066.105(c)(3). Position the discharge nozzle such that its lowest point is not more than 16 cm above the floor of the test cell.

(2) For FTP, LA–92, US06, or HFET testing of vehicles at or below 14,000 pounds GVWR, you may use a fixed-speed fan meeting the requirements of § 1066.105(c)(4) or (c)(5) as specified in the following table, with the engine compartment cover open:

TABLE 1 OF § 1066.410—FIXED-SPEED FAN CAPACITY AND POSITION SPECIFICATIONS

Test cycle	Maximum fan capacity	Approximate distance from the front of the vehicle
FTP ...	Up to 2.50 m^3/s	0 to 30 cm
US06	2.50 m^3/s to 7.10 m^3/s.	0 to 60 cm
LA–92	Up to 2.50 m^3/s	0 to 30 cm
HFET	Up to 2.50 m^3/s	0 to 30 cm

(c) Record the vehicle's speed trace based on the time and speed data from the dynamometer. Record speed to at least the nearest 0.01 mph and time to at least the nearest 0.01 s.

(d) You may perform practice runs for operating the vehicle and the dynamometer controls to meet the driving tolerances specified in § 1066.430 or adjust the emission sampling equipment. Verify that the accelerator pedal allows for enough control to closely follow the prescribed driving schedule. We recommend that you verify your ability to meet the minimum dilution factor requirements of § 1066.110(b)(2)(iii)(B) during these practice runs.

(e) Inflate tires on drive wheels according to the vehicle manufacturer's specifications. The tire pressure for drive wheels must be the same for dynamometer operation and for dynamometer coastdown procedures used for determining road-load

coefficients. Report these tire pressure values with the test results.

(f) Tie down or load the test vehicle as needed to provide a normal force at the tire and dynamometer roll interface to prevent wheel slip. For vehicles above 14,000 pounds GVWR, report this force with the test results.

(g) For vehicles which provide four-wheel drive or all-wheel drive operation, utilize the vehicle's normal (default) mode of operation. (For purposes of this paragraph (g), the term four-wheel drive includes other multiple drive axle configurations.) This may involve testing four-wheel drive or all-wheel drive on a dynamometer with a separate dynamometer roll for each drive axle. Alternatively, two drive axles may use a single roll, as described in § 1066.210(d)(1). You may also test the vehicle on a single roll by deactivating the second set of drive wheels, but only if this mode of operation does not decrease emissions or energy consumption relative to normal in-use operation. We may test such vehicles in four-wheel or all-wheel mode on one or more rolls to confirm that the alternate dynamometer procedures did not decrease emissions.

(h) Determine test weight as follows:

(1) For vehicles at or below 14,000 pounds GVWR, determine ETW as described in § 1066.810. Set dynamometer vehicle inertia, *I,* based on dynamometer type, as follows:

(i) For two-wheel drive dynamometers, set $I = \text{ETW}$.

(ii) For four-wheel drive dynamometers, set $I = 0.985 \cdot \text{ETW}$.

(2) For vehicles above 14,000 pounds GVWR, determine the vehicle's effective mass as described in 1066.310. This is the test weight.

(i) Warm up the dynamometer as recommended by the dynamometer manufacturer.

(j) Following the test, determine the actual driving distance by counting the number of dynamometer roll or shaft revolutions, or by integrating speed over the course of testing from a high-resolution encoder system.

§ 1066.420 Vehicle operation.

This section describes how to test a conventionally configured vehicle (vehicles with transmission shifters, foot pedal accelerators, etc). You may ask us to modify these procedures for vehicles that do not have these control features.

(a) Start the vehicle as follows:

(1) At the beginning of the test cycle, start the vehicle according to the procedure described in the owners manual. In the case of hybrid vehicles, this would generally involve activating vehicle systems such that the engine will start when the vehicle's control algorithms determine that the engine should provide power instead of or in addition to power from the rechargeable energy storage system (RESS). Unless we specify otherwise, engine starting throughout this part generally refers to this step of activating the system on hybrid vehicles, whether or not that causes the engine to start running.

(2) Place the transmission in gear as described by the test cycle in the standard-setting part. During idle operation, apply the brakes if necessary to keep the drive wheels from turning.

(b) If the vehicle does not start after your recommended maximum cranking time, wait and restart cranking according to your recommended practice. If you do not recommend such a cranking procedure, stop cranking after 10 seconds, wait for 10 seconds, then start cranking again for up to 10 seconds. You may repeat this for up to three start attempts. If the vehicle does not start after three attempts, you must determine and record the reason for failure to start. Shut off sampling systems and either turn the CVS off or disconnect the exhaust tube from the tailpipe during the diagnostic period to prevent flow through the exhaust system. Reschedule the vehicle for testing. This may require performing vehicle preparation and preconditioning if the testing needs to be rerun from a cold start. If failure to start occurs during a hot-start test, you may reschedule the hot-start test without repeating the cold-start test, as long as you bring the vehicle to a hot-start condition before starting the hot-start test.

(c) Repeat the recommended starting procedure if the engine has a false start (i.e., an incomplete start).

(d) Take the following steps if the engine stalls:

(1) If the engine stalls during an idle period, restart the engine immediately and continue the test. If you cannot restart the engine soon enough to allow the vehicle to follow the next acceleration, stop the driving schedule indicator and reactivate it when the vehicle restarts.

(2) Void the test if the vehicle stalls during vehicle operation. If this happens, remove the vehicle from the dynamometer, take corrective action, and reschedule the vehicle for testing. Record the reason for the malfunction (if determined) and any corrective action. See the standard-setting part for instructions about reporting these malfunctions.

(e) Operate vehicles during testing as follows:

(1) Where we do not give specific instructions, operate the vehicle according to the recommendations in the owners manual, unless those recommendations are unrepresentative of what may reasonably be expected for in-use operation.

(2) If vehicles have features that preclude dynamometer testing, you may modify these features as necessary to allow testing, consistent with good engineering judgment, as long as it does not affect your ability to show that your vehicles comply with standards. Send us written notification describing these changes along with supporting rationale.

(3) Operate vehicles during idle as follows:

(i) For vehicles with automatic transmission, operate at idle with the transmission in ''Drive'' with the wheels braked, except that you may shift to ''Neutral'' for the first idle period and for any idle period longer than one minute. If you put the vehicle in ''Neutral'' during an idle, you must shift the vehicle into ''Drive'' with the wheels braked at least 5 seconds before the end of the idle period. Note that this does not preclude vehicle designs involving engine operation with stop-start functions where the engine stops when the brake is applied below a certain threshold speed and restarts upon release of the brake.

(ii) For vehicles with manual transmission, operate at idle with the transmission in gear with the clutch disengaged, except that you may shift to ''Neutral'' with the clutch engaged for the first idle period and for any idle period longer than one minute. If you put the vehicle in ''Neutral'' during idle, you must shift to first gear with the clutch disengaged at least 5 seconds before the end of the idle period. Note that this does not preclude vehicle designs involving engine operation with stop-start functions where the engine stops when the clutch is disengaged below a certain threshold speed and restarts upon reengagement of the clutch.

(4) Operate the vehicle with the appropriate accelerator pedal movement necessary to achieve the speed versus time relationship prescribed by the driving schedule. Avoid smoothing speed variations and excessive accelerator pedal perturbations.

(5) Operate the vehicle smoothly, following representative shift speeds and procedures. For manual transmissions, the operator shall release the accelerator pedal during each shift and accomplish the shift with minimum time. If the vehicle cannot accelerate at the specified rate, operate it at

maximum available power until the vehicle speed reaches the value prescribed for that time in the driving schedule.

(6) Decelerate as follows:

(i) For vehicles with automatic transmission, use the brakes or accelerator pedal as necessary, without manually changing gears, to maintain the desired speed.

(ii) For vehicles with manual transmission, shift gears in a way that represents reasonable shift patterns for in-use operation, considering vehicle speed, engine speed, and any other relevant variables. Disengage the clutch when the speed drops below 15 mph, when engine roughness is evident, or when good engineering judgment indicates the engine is likely to stall. Manufacturers may recommend shift guidance in the owners manual that differs from the shift schedule during testing as long as both shift schedules are included in the application for certification. In this case, we may use the shift schedule based on the shift pattern described in the owners manual.

§ 1066.425 Test preparation.

(a) Follow the procedures for PM sample preconditioning and tare weighing as described in 40 CFR 1065.590 if you need to measure PM emissions.

(b) For vehicles above 14,000 pounds GVWR with compression-ignition engines, verify the amount of nonmethane hydrocarbon contamination as described in 40 CFR 1065.520(g).

(c) Unless the standard-setting part specifies different tolerances, verify at some point before the test that ambient conditions are within the tolerances specified in this paragraph (c). For purposes of this paragraph (c), ''before the test'' means any time from a point just prior to engine starting (excluding engine restarts) to the point at which emission sampling begins.

(1) Ambient temperature must be (20 to 30) °C. See § 1066.430(i) for circumstances under which ambient temperatures must remain within this range during the test.

(2) Dilution air conditions must meet the specifications in § 1066.110(b)(2). We recommend verifying dilution air conditions just before starting each test interval.

(d) Control test cell ambient air humidity as follows:

(1) For vehicles at or below 14,000 pounds GVWR, follow the humidity requirements in Table 1 of this section, unless the standard-setting part specifies otherwise. When complying with humidity requirements in the table, where no tolerance is specified, use good engineering judgment to maintain the humidity level near the specified value within the limitations of your test facility.

(2) For vehicles above 14,000 pounds GVWR, you may test vehicles at any humidity.

TABLE 1 OF § 1066.425—TEST CELL HUMIDITY REQUIREMENTS

Test cycle	Humidity requirement (grains H_2O per pound dry air)	Tolerance (grains H_2O per pound dry air)
AC17	69	±5 average, ≤± 10 instantaneous.
FTP[1] and LA–92	50	
HFET	50	
SC03	100	±5.
US06	50	

[1] FTP humidity requirement does not apply for cold (−7 °C), intermediate (10 °C), and hot (35 °C) temperature testing.

(e) You may perform a final calibration of proportional-flow control systems, which may include performing practice runs.

(f) You may perform the following procedure to precondition sampling systems:

(1) Operate the vehicle over the test cycle.

(2) Operate any dilution systems at their expected flow rates. Prevent aqueous condensation in the dilution systems as described in 40 CFR 1065.140(c)(6), taking into account allowances given in § 1066.110(b)(2)(iv).

(3) Operate any PM sampling systems at their expected flow rates.

(4) Sample PM using any sample media. You may change sample media during preconditioning. You must discard preconditioning samples without weighing them.

(5) You may purge any gaseous sampling systems during preconditioning.

(6) You may conduct calibrations or verifications on any idle equipment or analyzers during preconditioning.

(g) Take the following steps before emission sampling begins:

(1) For batch sampling, connect clean storage media, such as evacuated bags or tare-weighed filters.

(2) Start all measurement instruments according to the instrument manufacturer's instructions and using good engineering judgment.

(3) Start dilution systems, sample pumps, and the data-collection system.

(4) Pre-heat or pre-cool heat exchangers in the sampling system to within their operating temperature tolerances for a test.

(5) Allow heated or cooled components such as sample lines, filters, chillers, and pumps to stabilize at their operating temperatures.

(6) Adjust the sample flow rates to desired levels using bypass flow, if desired.

(7) Zero or re-zero any electronic integrating devices before the start of any test interval.

(8) Select gas analyzer ranges. You may not switch the gain of an analyzer's analog operational amplifier(s) during a test. However, you may switch (automatically or manually) gas analyzer ranges during a test if such switching changes only the range over which the digital resolution of the instrument is applied.

(9) Zero and span all continuous gas analyzers using gases that meet the specifications of 40 CFR 1065.750. For FID analyzers, you may account for the carbon number of your span gas either during the calibration process or when calculating your final emission value. For example, if you use a C_3H_8 span gas of concentration 200 ppm (μmol/mol), you may span the FID to respond with a value of 600 ppm (μmol/mol) of carbon or 200 ppm of propane. However, if your FID response is equivalent to propane, include a factor of three to make the final calculated hydrocarbon mass consistent with a molar mass of 13.875389. When utilizing an NMC–FID, span the FID analyzer consistent with the determination of their respective response factors, *RF,* and penetration

fractions, *PF,* according to 40 CFR 1065.365.

(10) We recommend that you verify gas analyzer responses after zeroing and spanning by sampling a calibration gas that has a concentration near one-half of the span gas concentration. Based on the results, use good engineering judgment to decide whether or not to re-zero, re-span, or re-calibrate a gas analyzer before starting a test.

(11) If you correct for dilution air background concentrations of associated engine exhaust constituents, start sampling and recording background concentrations at the same time you start sampling exhaust gases.

(12) Turn on cooling fans immediately before starting the test.

(h) Proceed with the test sequence described in § 1066.430.

§ 1066.430 Performing emission tests.

(a) See the standard-setting part for drive schedules. These are defined by a smooth fit of a specified speed vs. time sequence.

(b) The driver must attempt to follow the target schedule as closely as possible, consistent with the specifications in paragraph (b) of this section. Instantaneous speeds must stay within the following tolerances:

(1) The upper limit is 2.0 mph higher than the highest point on the trace within 1.0 s of the given point in time.

(2) The lower limit is 2.0 mph lower than the lowest point on the trace within 1.0 s of the given time.

(3) The same limits apply for vehicle operation without exhaust measurements, such as vehicle preconditioning and warm-up, except that the upper and lower limits for speed values are ±4.0 mph. In addition, up to three occurrences of speed variations greater than the tolerance are acceptable for vehicle operation without exhaust measurements, as long as they occur for less than 15 seconds on any occasion and are clearly documented as to the time and speed at that point of the driving schedule.

(4) Void the test if you do not maintain speed values as specified in this paragraph (b), except as allowed by this paragraph (b)(4). Speed variations (such as may occur during gear changes or braking spikes) may occur as follows, provided that such variations are clearly documented, including the time and speed values and the reason for the deviation:

(i) Speed variations greater than the specified limits are acceptable for up to 2.0 seconds on any occasion.

(ii) For vehicles that are not able to maintain acceleration as specified in § 1066.420(e)(5), do not count the insufficient acceleration as being outside the specified limits.

(5) We may approve an alternate test cycle and cycle-validation criteria for vehicles that do not have enough power to follow the specified driving trace. The alternate driving specifications must be based on making best efforts to maintain acceleration and speed to follow the specified test cycle. We must approve these alternate driving specifications before you perform this testing.

(c) Figure 1 and Figure 2 of this section show the range of acceptable speed tolerances for typical points during testing. Figure 1 of this section is typical of portions of the speed curve that are increasing or decreasing throughout the 2-second time interval. Figure 2 of this section is typical of portions of the speed curve that include a maximum or minimum value.

Figure 1 of §1066.430—Example of the allowable ranges for the driver's trace.

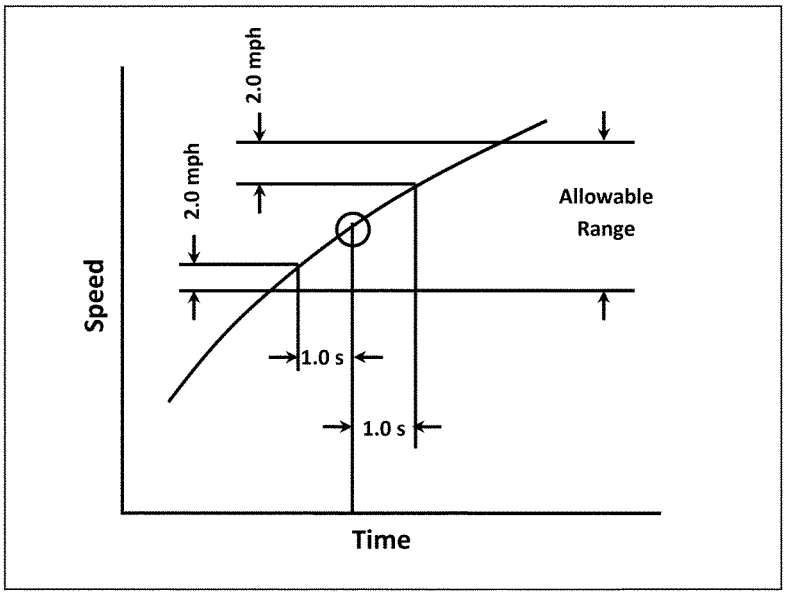

Figure 2 of §1066.430—Example of the allowable ranges for the driver's trace.

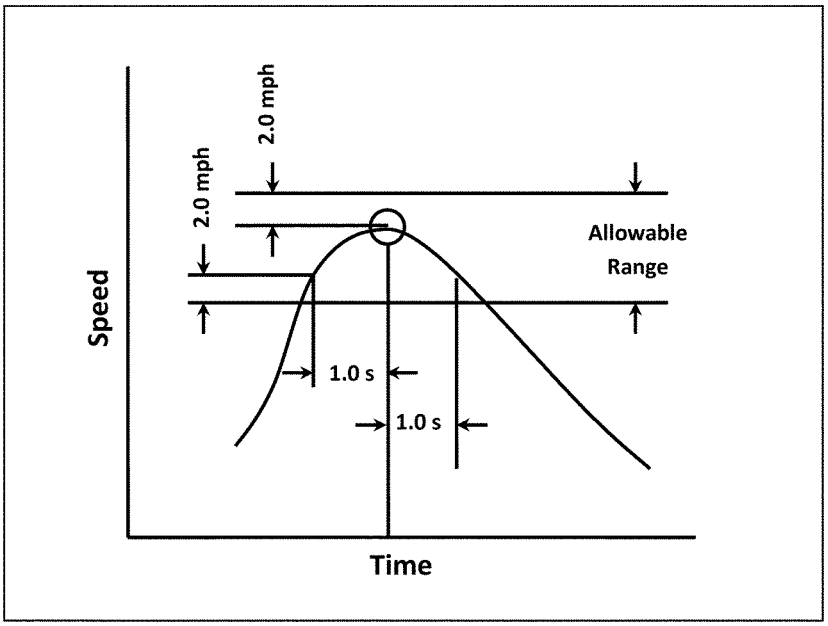

(d) Start testing as follows:

(1) If a vehicle is already running and warmed up, and starting is not part of the test cycle, operate the vehicle as follows:

(i) For transient test cycles, control vehicle speeds to follow a drive schedule consisting of a series of idles, accelerations, cruises, and decelerations.

(ii) For cruise test cycles, control the vehicle operation to match the speed of the first interval of the test cycle. Follow the instructions in the standard-setting part to determine how long to stabilize the vehicle during each interval, how long to sample emissions at each interval, and how to transition between intervals.

(2) If engine starting is part of the test cycle, start recording continuous data,

any electronic integrating devices, and batch sampling before starting the engine. Initiate the driver's trace when the engine starts.

(e) Perform the following at the end of each test interval, except as specified in subpart I of this part:

(1) Shut down the vehicle if it is part of the test cycle or if testing is complete.

(2) Continue to operate all sampling and dilution systems to allow the response times to elapse. Then stop all sampling and recording, including background sampling. Finally, stop any integrating devices and indicate the end of the duty cycle in the recorded data.

(f) If testing involves engine shutdown followed by another test interval, start a timer for the vehicle soak when the engine shuts down. Turn off cooling fans, close the vehicle hood (if applicable), and turn off the CVS or disconnect the exhaust tube from the tailpipe(s) of the vehicle unless otherwise instructed in the standard-setting part. If testing is complete, disconnect the exhaust tube from the vehicle tailpipe(s) and drive the vehicle from dynamometer.

(g) Take the following steps after emission sampling is complete:

(1) For any proportional batch sample, such as a bag sample or PM sample, verify that proportional sampling was maintained according to 40 CFR 1065.545. Void any samples that did not maintain proportional sampling according to those specifications.

(2) Place any used PM samples into covered or sealed containers and return them to the PM-stabilization environment. Follow the PM sample post-conditioning and total weighing procedures in 40 CFR 1065.595.

(3) As soon as practical after the interval or test cycle is complete, or optionally during the soak period if practical, perform the following:

(i) Begin drift check for all continuous gas analyzers as described in paragraph (g)(6) of this section and zero and span all batch gas analyzers as soon as practical prior to any batch sample analysis. You may perform this batch analyzer zero and span prior to the end of the test cycle or interval.

(ii) Analyze any conventional gaseous batch samples (HC, CH_4, CO, NO_X, and CO_2) no later than 30 minutes after an interval or test cycle is complete, or during the soak period if practical. Analyze background samples no later than 60 minutes after the test cycle is complete.

(iii) Analyze nonconventional gaseous batch samples (including background), such as NMHCE, N_2O, or NMOG sampling with ethanol, as soon as practicable using good engineering judgment.

(4) *Range validation.* If an analyzer operated above 100% of its range at any time during the test, perform the following steps:

(i) For batch sampling, re-analyze the sample using the lowest analyzer range that results in a maximum instrument response below 100%. Report the result from the lowest range from which the analyzer operates below 100% of its range.

(ii) For continuous sampling, repeat the entire test using the next higher analyzer range. If the analyzer again operates above 100% of its range, repeat the test using the next higher range. Continue to repeat the test until the analyzer consistently operates at less than 100% of its range. Keep records of any tests where the analyzer exceeds its range. We may consider these results to be failures, consistent with good engineering judgment.

(5) After quantifying exhaust gases, verify drift as follows:

(i) For batch and continuous gas analyzers, record the mean analyzer value after stabilizing a zero gas to the analyzer. Stabilization may include time to purge the analyzer of any sample gas, plus any additional time to account for analyzer response.

(ii) Record the mean analyzer value after stabilizing the span gas to the analyzer. Stabilization may include time to purge the analyzer of any sample gas, plus any additional time to account for analyzer response.

(iii) Use these data to validate that analyzer drift does not exceed 2.0% of the analyzer full scale.

(h) [Reserved]

(i) Measure and record ambient pressure. Measure and record ambient temperature continuously to verify that it remains within the temperature range specified in § 1066.425(c)(1) throughout the test. Also measure humidity if required, such as for correcting NO_X emissions, or meeting the requirements of § 1066.425(d).

(j) For vehicles at or below 14,000 pounds GVWR, determine overall driver accuracy as follows:

(1) Compare the following drive cycle metrics, based on measured vehicle speeds, to a reference value based on the target cycle that would have been generated by driving exactly to the target trace as described in SAE J2951 (incorporated by reference in § 1066.1010).

(i) Determine the Energy Economy Rating as described in Section 5.4 of SAE J2951.

(ii) Determine the Absolute Speed Change Rating as described in Section 6.1.2 of SAE J2951.

(iii) Calculate the Inertia Work Rating, IR, using the both the sums of the incremental driven and the target inertia work as described in Eq. 1066.430–1.

$$IR = \left(\frac{\sum_{i=1}^{n} F_{ID_i} \cdot D_{D_i} - \sum_{j=1}^{m} F_{IT_j} \cdot D_{T_j}}{\sum_{j=1}^{m} F_{IT_j} \cdot D_{T_j}} \right) \cdot 100$$

Eq. 1066.430-1

Where:

F_{ID_i} = the driven inertial force over an interval *i,* as described by Equation 18 of SAE J2951.

F_{ID_j} = the target inertial force over an interval *j,* as described by Equation 19 of SAE J2951.

D_{D_i} = the incremental driven distance over an interval *i,* as described by Equation 12 of SAE J2951.

D_{D_j} = the incremental target distance over an interval *j,* as described by Equation 13 of SAE J2951.

(2) The standard-setting part may require you to provide to us 10 Hz data to characterize both target and actual values for cycle energy. Calculate target values based on the vehicles speeds from the specified test cycle.

Subpart F—Hybrids and Electric Vehicles

§ 1066.501 Overview.

For HEV, PHEV, and pure electric vehicle (EV), use the following procedures:

(a) Correct the results for Net Energy Change of the RESS as follows:

(1) For vehicles at or below 14,000 pounds GVWR, follow SAE J1711 (incorporated by reference in § 1066.1010) except as noted in this paragraph (a). Use ±1% of reading or ±0.3% of full scale, whichever is greater, in place of the current measurement accuracy in Section 4.2a of SAE J1711.

(2) For vehicles above 14,000 pounds GVWR, follow SAE J2711 (incorporated by reference in § 1066.1010) for requirements related to charge-sustaining operation.

(3) For pure EVs, irrespective of GVWR, follow SAE J1634 (incorporated by reference in § 1066.1010).

(b) This paragraph (b) applies for vehicles that include an engine-powered generator or other auxiliary power unit that provides motive power. For example, this would include a vehicle that has a small gasoline engine that generates electricity to charge batteries. Unless we approve otherwise, measure emissions for all test cycles when such an engine is operating. For each test cycle for which emissions are not measured, you must validate that such engines are not operating at any time during the test cycle.

Subpart G—Calculations

§ 1066.601 Overview.

(a) This subpart describes calculations used to determine emission rates. See the standard setting part and the other provisions of this part to determine which equations apply for your testing. This subpart describes how to—

(1) Use the signals recorded before, during, and after an emission test to calculate distance-specific emissions of each regulated pollutant.

(2) Perform calculations for calibrations and performance checks.

(3) Determine statistical values.

(b) You may use data from multiple systems to calculate test results for a single emission test, consistent with good engineering judgment. You may also make multiple measurements from a single batch sample, such as multiple weighing of a PM filter or multiple readings from a bag sample. Although you may use an average of multiple measurements from a single test, you may not use test results from multiple emission tests to report emissions. We allow weighted means where appropriate, such as for sampling onto a PM filter over the FTP. You may discard statistical outliers, but you must report all results.

§ 1066.610 Mass-based and molar-based exhaust emission calculations.

(a) Calculate your total mass of emissions over a test cycle as specified in paragraph (c) of this section or in 40 CFR part 1065, subpart G, as applicable.

(b) For composite emission calculations over multiple test intervals and corresponding weighting factors, see the standard-setting part.

(c) To calculate total mass emissions, multiply a concentration by its respective flow and density as specified in Eq. 1066.610–1. Before calculating mass emissions as specified in paragraph (d) and (e) of this section, perform the following sequence of preliminary calculations to correct recorded concentration measurements:

(1) For vehicles above 14,000 pounds GVWR, correct all THC and CH_4 concentrations for initial contamination as described in 40 CFR 1065.660(a), including continuous readings, sample bag readings, and dilution air background readings. This correction is optional for vehicles at or below 14,000 pounds GVWR.

(2) Correct all concentrations measured on a ''dry'' basis to a ''wet'' basis, including dilution air background concentrations.

(3) Calculate all NMHC and CH_4 concentrations, including dilution air background concentrations, as described in 40 CFR 1065.660.

(4) For vehicles at or below 14,000 pounds GVWR, calculate HC concentrations, including dilution air background concentrations, as described in this section and § 1066.665 for NMOG. For emission testing of vehicles above 14,000 pounds GVWR, with fuels that contain 25% or more oxygenated compounds by volume, calculate HC concentrations, including dilution air background concentrations, as described in 40 CFR part 1065, subpart I, for THCE and NMHCE.

(5) Correct all NO_X emission values for test cell ambient air humidity as described in § 1066.630.

(6) Correct all gaseous concentrations for dilution air background as described in § 1066.620.

(7) Correct all PM filter masses for sample media buoyancy as described in 40 CFR 1065.690.

(d) Calculate the emission mass of each gaseous pollutant using the following equation:

$$m_{[\text{emission}]} = V_{\text{mix}} \cdot \rho_{[\text{emission}]} \cdot x_{[\text{emission}]} \cdot c$$

Eq. 1066.610-1

Where:

$m_{[\text{emission}]}$ = emission mass over the test interval.

V_{mix} = total dilute exhaust volume over the test interval at standard reference conditions, corrected for any volume removed for emission sampling and the addition of secondary dilution air (if applicable).

$\rho_{[\text{emission}]}$ = density of the appropriate chemical species as given in § 1066.1005(f).

$\chi_{[\text{emission}]}$ = measured emission concentration in the sample, after dry-to-wet and background corrections.

$c = 10^{-2}$ for emission concentrations % and 10^{6} for emission concentrations in ppm.

Example:

V_{mix} = 170.878 m^3 (from paragraph (f) of this section)

ρ_{NOx} = 1913 g/m^3

χ_{NOx} = 0.9721 ppm

$c = 10^{-6}$

$m_{NOx} = 170.878 \cdot 1913 \cdot 0.9721 \cdot 10^{-6} = 0.3177$ g

(e) The calculation of PM is dependent on how many PM filters are used (for example as described in § 1066.822(b)), as follows:

(1) Except as specified in paragraphs (e)(2) and (3) of this section, calculate m_{PM} using the following equation:

$$m_{\text{PM}} = \left(\frac{V_{\text{mix}}}{V_{\text{PMstd}} - V_{\text{sdastd}}} \right) \cdot \left(m_{\text{PMfil}} - m_{\text{PMbkgnd}} \right)$$

Eq. 1066.610-2

Where:

m_{PM} = mass of particulate matter emissions over the test interval, as described in § 1066.820(b)(1), (2), and (3).

V_{mix} = total dilute exhaust volume over the test interval at standard reference conditions, corrected for any volume removed for emissions sampling and the addition of secondary dilution air (if applicable).

V_{sdastd} = total volume of secondary dilution air flow sampled through the filter over the test phase at standard temperature and pressure.

m_{PMfil} = mass of particulate matter emissions on the filter over the test interval.

$m_{PMbkgnd}$ = mass of particulate matter on the background filter.

Example:

V_{mix} = 170.878 m³ (from paragraph (f) of this section)

V_{PMstd} = 0.925 m³ (from paragraph (f) of this section)

V_{sdastd} = 0.527 m³ (from paragraph (f) of this section)

m_{PMfil} = 0.0000045 g

$m_{PMbkgnd}$ = 0.0000014 g

$$m_{PM} = \left(\frac{170.878}{0.925 - 0.527}\right) \cdot \left(0.0000045 - 0.0000014\right) = 0.00133 \text{ g}$$

(2) If you sample PM onto a single filter as described in § 1066.820(b)(4), calculate m_{PM} using the following equation:

$$m_{PM} = \left(\frac{V_{mix}}{\frac{\left(V_{ct\text{-}PMstd} - V_{ct\text{-}sdastd}\right)}{0.43} + \left(V_{s\text{-}PMstd} - V_{s\text{-}sdastd}\right) + \frac{\left(V_{ht\text{-}PMstd} - V_{ht\text{-}sdastd}\right)}{0.57}}\right) \cdot \left(m_{PMfil} - m_{PMbkgnd}\right)$$

Eq. 1066.610-3

Eq. 1066.610–3

Where:

m_{PM} = mass of particulate matter emissions over the entire FTP as sampled according to § 1066.820(b)(4).

V_{mix} = total dilute exhaust volume over the test interval at standard reference conditions, corrected for any volume removed for emissions sampling and the addition of secondary dilution air (if applicable).

$V_{[interval]\text{-}PMstd}$ = total volume of dilute exhaust sampled through the filter over the test interval (ct = cold transient, s = stabilized, ht = hot transient) at standard reference conditions.

$V_{[interval]\text{-}sdastd}$ = total volume of secondary dilution air sampled through the filter over the test interval (ct = cold transient, s = stabilized, ht = hot transient) at standard reference conditions.

m_{PMfil} = mass of particulate matter emissions on the filter over the test interval.

$m_{PMbkgnd}$ = mass of particulate matter on the background filter.

Example:

V_{mix} = 633.691 m³

$V_{ct\text{-}PMstd}$ = 0.925 m³

$V_{ct\text{-}sdastd}$ = 0.527 m³

$V_{s\text{-}PMstd}$ = 1.967 m³

$V_{s\text{-}sdastd}$ = 1.121 m³

$V_{ht\text{-}PMstd}$ = 1.122 m³

$V_{ht\text{-}sdastd}$ = 0.639 m³

m_{PMfil} = 0.0000106 g

$m_{PMbkgnd}$ = 0.0000014 g

$$m_{PM} = \left(\frac{633.691}{\frac{\left(0.925 - 0.527\right)}{0.43} + \left(1.967 - 1.121\right) + \frac{\left(1.122 - 0.639\right)}{0.57}}\right) \cdot \left(0.0000106 - 0.0000014\right)$$

m_{pm} = 0.00222 g

(3) If you sample PM onto a single filter as described in § 1066.820(b)(5), calculate m_{PM} using the following equation:

$$m_{PM} = \left(\frac{V_{mix}}{\frac{\left(V_{ct\text{-}PMstd} - V_{ct\text{-}sdastd}\right) + \left(V_{cs\text{-}PMstd} - V_{cs\text{-}sdastd}\right)}{0.43} + \frac{\left(V_{ht\text{-}PMstd} - V_{ht\text{-}sdastd}\right) + \left(V_{hs\text{-}PMstd} - V_{hs\text{-}sdastd}\right)}{0.57}}\right) \cdot \left(m_{PMfil} - m_{PMbkgnd}\right)$$

Eq. 1066.610-4

Where:

m_{PM} = mass of particulate matter emissions over the entire FTP as sampled according to § 1066.820(b)(5).

V_{mix} = total dilute exhaust volume over the test interval at standard reference conditions, corrected for any volume removed for emissions sampling and the addition of secondary dilution air (if applicable).

$V_{[interval]\text{-}PMstd}$ = total volume of dilute exhaust sampled through the filter over the test interval (ct = cold transient, cs = cold stabilized, ht = hot transient, hs = hot stabilized) at standard reference conditions.

$V_{[interval]\text{-}sdastd}$ = total volume of secondary dilution air sampled through the filter over the test interval (ct = cold transient, cs = cold stabilized, ht = hot transient, hs = hot stabilized) at standard reference conditions.

m_{PMfil} = mass of particulate matter emissions on the filter over the test interval.

$m_{PMbkgnd}$ = mass of particulate matter on the background filter.

Example:

V_{mix} = 972.121 m³
$V_{ct\text{-}PMstd}$ = 0.925 m³
$V_{ct\text{-}sdastd}$ = 0.529 m³
$V_{cs\text{-}PMstd}$ = 1.968 m³
$V_{cs\text{-}sdastd}$ = 1.123 m³
$V_{ht\text{-}PMstd}$ = 1.122 m³
$V_{ht\text{-}sdastd}$ = 0.641 m³
$V_{hs\text{-}PMstd}$ = 1.967 m³
$V_{hs\text{-}sdastd}$ = 1.121 m³
m_{PMfil} = 0.0000229 g
$m_{PMbkgnd}$ = 0.0000014 g

$$m_{PM} = \left(\frac{972.121}{\frac{(0.925-0.529)+(1.968-1.123)}{0.43} + \frac{(1.122-0.641)+(1.967-1.121)}{0.57}} \right) \cdot (0.0000229 - 0.0000014)$$

M_{PM} = 0.00155 g

(f) This paragraph (f) describes how to correct flow and flow rates to standard reference conditions and provides an example for determining V_{mix} based on CVS total flow and the removal of sample flow from the dilute exhaust gas.

(1) Correct flow and flow rates to standard reference conditions as needed using the following equation:

$$V_{[flow]std} = \frac{V_{[flow]act} \cdot p_{in} \cdot T_{std}}{p_{std} \cdot T_{in}}$$

Eq. 1066.610-5

Where:

$V_{[flow]std}$ = total volume of flow at the flow meter at standard reference conditions.

$V_{[flow]act}$ = total volume of flow at the flow meter at test conditions.

p_{in} = absolute static pressure at the flow meter inlet, measured directly or calculated as the sum of atmospheric pressure plus a differential pressure referenced to atmospheric pressure.

T_{std} = standard temperature.

p_{std} = standard pressure.

T_{in} = average temperature of the dilute exhaust sample at the flow meter inlet.

Example:

V_{PMact} = 1.071 m³
p_{in} = 101.7 kPa
T_{std} = 293.15 K
p_{std} = 101.325 kPa
T_{in} = 340.5 K

$$V_{PMstd} = \frac{1.071 \cdot 101.7 \cdot 293.15}{101.325 \cdot 340.5} = 0.925 \text{ m}^3$$

(2) The following example provides a determination of V_{mix} based on CVS total flow and the removal of sample flow from one dilute exhaust gas analyzer and one PM sampling system that is utilizing secondary dilution. Note that your V_{mix} determination may vary from Eq. 1066.610–6 based on the number of flows that are removed from your dilute exhaust gas and whether your PM sampling system is using secondary dilution. For this example, V_{mix} is governed by the following equation:

$$V_{mix} = V_{CVSstd} + V_{gasstd} + V_{PMstd} - V_{sdastd}$$

Eq. 1066.610-6

Where:

V_{CVSstd} = total dilute exhaust volume over the test interval at the flow meter at standard reference conditions.

V_{gasstd} = total volume of sample flow through the gaseous emission bench over the test interval at standard reference conditions.

V_{PMstd} = total volume of dilute exhaust sampled through the filter over the test interval at standard reference conditions.

V_{sdastd} = total volume of secondary dilution air flow sampled through the filter over the test interval at standard reference conditions.

Example:

Using Eq. 1066.610–5

V_{CVSstd} = 170.451 m³, where V_{CVSact} = 170.721 m³, p_{in} = 101.7 kPa, and T_{in} = 294.7 K

Using Eq. 1066.610–5

V_{gasstd} = 0.028 m³, where V_{gasact} = 0.033 m³, p_{in} = 101.7 kPa, and T_{in} = 340.5 K

Using Eq. 1066.610–5

V_{PMstd} = 0.925 m³, where V_{PMact} = 1.071 m³, p_{in} = 101.7 kPa, and T_{in} = 340.5 K

Using Eq. 1066.610–5

V_{sdastd} = 0.527 m³, where V_{sdaact} = 0.531 m³, p_{in} = 101.7 kPa, and T_{in} = 296.3 K

V_{mix} = 170.451 + 0.028 + 0.925 − 0.527 = 170.878 m³

(g) *Total sample volume over a test interval.* Calculate total flow, $V_{[flow]}$, for a CVS or exhaust gas sampler as follows:

(1) *Varying versus constant flow rates.* The calculation methods depend on differentiating varying and constant flow, as follows:

(i) We consider the following to be examples of varying flows that require a continuous multiplication of concentration times volumetric flow rate: raw exhaust, exhaust diluted with a constant flow rate of dilution air, and CVS dilution with a CVS flow meter that does not have an upstream heat exchanger or electronic flow control.

(ii) We consider the following to be examples of constant exhaust flows: CVS diluted exhaust with a CVS flow meter that has an upstream heat exchanger, an electronic flow control, or both.

(2) *Continuous sampling.* For continuous sampling, you must frequently record a continuously updated flow signal. This recording requirement applies for both varying and constant flow rates.

(i) *Varying flow rate.* If you continuously sample from a varying exhaust flow rate, calculate $V_{[flow]}$ using the following equation:

$$V_{[flow]} = \sum_{i=1}^{N} \dot{Q}_i \cdot \Delta t$$

Eq. 1066.610-7

Where:

$$\Delta t = 1/f_{record}$$

Eq. 1066.610-8

Example:

$N = 505$

$\dot{Q}_{CVS1} = 0.276\ m^3/s$

$\dot{Q}_{CVS2} = 0.294\ m^3/s$

$f_{record} = 1$ Hz

Using Eq. 1066.610–8,

$\Delta t = 1/1 = 1$ s

$V_{CVS} = (0.276+0.294+...+\dot{Q}_{QCVS505}) \cdot 1$

$V_{CVS} = 170.721\ m^3$

(ii) *Constant flow rate.* If you continuously sample from a constant exhaust flow rate, use the same calculation described in paragraph (g)(2)(i) of this section or calculate the mean flow recorded over the test interval and treat the mean as a batch sample, as described in paragraph (g)(3)(ii) of this section.

(3) *Batch sampling.* For batch sampling, calculate total flow by integrating a varying flow rate or by determining the mean of a constant flow rate, as follows:

(i) *Varying flow rate.* If you proportionally collect a batch sample from a varying exhaust flow rate, integrate the flow rate over the test interval to determine the total flow from which you extracted the proportional sample, as described in paragraph (g)(2)(i) of this section.

(ii) *Constant flow rate.* If you batch sample from a constant exhaust flow rate, extract a sample at a proportional or constant flow rate and calculate $V_{[flow]}$ from the flow from which you extract the sample by multiplying the mean flow rate by the time of the test interval using the following equation:

$$V_{[flow]} = \bar{\dot{Q}} \cdot \Delta t$$

Eq. 1066.610-9

Example:

$\bar{\dot{Q}}_{CVS} = 0.338\ m^3/s$

$\Delta t = 505$ s

$V_{CVS} = 0.338 \cdot 505$

$V_{CVS} = 170.69\ m^3$

§ 1066.620 Dilution air background correction.

(a) Correct the emissions in a gaseous sample for background using the following equation:

$$x_{[emission]} = x_{[emission]dexh} - x_{[emission]bkgnd} \cdot \left(1 - \left(\frac{1}{DF}\right)\right)$$

Eq. 1066.620-1

Where:

$\chi_{[emission]dexh}$ = measured emission concentration in dilute exhaust (after dry-to-wet correction for dry measurements).

$\chi_{[emission]bkgnd}$ = measured emission concentration in the dilution air (after dry-to-wet correction for dry measurements).

DF = dilution factor determined in paragraph (b) of this section.

Example:

$\chi_{NOxdexh} = 1.08305$ ppm

$\chi_{NOxbkgnd} = 0.12456$ ppm

$DF = 9.14506$

$$x_{NOx} = 1.08305 - 0.12456 \cdot \left(1 - \left(\frac{1}{9.14506}\right)\right) = 0.97211 \text{ ppm}$$

(b) Determine the dilution factor, *DF,* over the test interval using the following equation:

$$DF = \frac{1}{\left(1 + \frac{\alpha}{2} + 3.76 \cdot \left(1 + \frac{\alpha}{4} - \frac{\beta}{2}\right)\right) \cdot (x_{CO2} + x_{NMHC} + x_{CH4} + x_{CO})}$$

Eq. 1066.620-2

Where:

χ_{CO2} = amount of CO_2 measured in the sample over the test interval.

χ_{NMHC} = amount of C_1-equivalent NMHC measured in the sample over the test interval.

χ_{CH4} = amount of CH_4 measured in the sample over the test interval.

χ_{CO} = amount of CO measured in the sample over the test interval.

α = atomic hydrogen-to-carbon ratio of the test. You may measure α or use default values from Table 1 of 40 CFR 1065.655.

β = atomic oxygen-to-carbon ratio of the test fuel. You may measure β or use default values from Table 1 of 40 CFR 1065.655.

Example:

$\chi_{CO2} = 1.456\% = 0.01456$

$\chi_{NMHC} = 0.84$ ppm $= 0.00000084$

$\chi_{CH4} = 0.26$ ppm $= 0.00000026$

$\chi_{CO} = 80.4$ ppm $= 0.0000804$

$\alpha = 1.92$

$\beta = 0.03$

$$DF = \frac{1}{\left(1+\frac{1.92}{2}+3.76\cdot\left(1+\frac{1.92}{4}-\frac{0.03}{2}\right)\right)\cdot\left(0.01456+0.00000084+0.00000026+0.0000804\right)} = 9.14506$$

(c) Determine the dilution factor, *DF,* over the test interval for partial-flow dilution sample systems that measure PM using the following equation:

$$DF = \frac{V_{\text{PMstd}}}{V_{\text{exhstd}}}$$

Eq. 1066.620-3

Where:

V_{PMstd} = total dilute exhaust volume sampled through the filter over the test interval at standard reference conditions.

V_{exhstd} = total exhaust volume sampled from the vehicle at standard reference conditions.

Example:

V_{PMstd} = 170.9 m³

V_{exhstd} = 15.9 m³

$$DF = \frac{170.9}{15.4} = 11.1$$

(d) Determine the time-weighted dilution factor, DF_{w}, over the duty cycle using the following equation:

$$DF_{\text{w}} = \frac{\sum_{i=1}^{N} t_i}{\sum_{i=1}^{N} \frac{1}{DF_i}\cdot t_i}$$

Eq. 1066.620-4

Where:

N = number of test intervals.

i = test interval number

t = duration of the test interval.

DF = dilution factor over the test interval.

Example:

N = 3

DF_1 = 14.40

t_1 = 505 s

DF_2 = 24.48

t_2 = 867 s

DF_3 = 17.28

t_3 = 505 s

$$DF_{\text{w}} = \frac{505+867+505}{\left(\frac{1}{14.40}\cdot 505\right)+\left(\frac{1}{24.48}\cdot 867\right)+\left(\frac{1}{17.28}\cdot 505\right)} = 18.82$$

§ 1066.630 NO_X intake-air humidity correction.

See the standard-setting part to determine if you may correct NO_X emissions for the effects of intake-air humidity. Correct NO_X emissions for intake-air humidity as described in this section. See § 1066.610(c)(1) for the proper sequence for applying the NO_X intake-air humidity correction.

(a) For vehicles at or below 14,000 pounds GVWR, apply a correction for any reciprocating engines for the following test cycles:

(1) Calculate a humidity correction using a time-weighted mean value for ambient humidity over the test interval. Calculate absolute ambient humidity in grams H_2O vapor per kilogram of dry air using the following equation:

$$H = \frac{1000\cdot M_{\text{H2O}}\cdot p_{\text{d}}\cdot RH\%\cdot 0.01}{M_{\text{air}}\cdot\left(p_{\text{atmos}} - p_{\text{d}}\cdot RH\%\cdot 0.01\right)}$$

Eq. 1066.630-1

Where:

M_{H2O} = molar mass of H_2O, in g/mol.

p_{d} = saturated vapor pressure at the ambient dry bulb temperature, in kPa.

$RH\%$ = relative humidity of ambient air, in %.

M_{air} = molar mass of air, in g/mol.

p_{atmos} = atmospheric pressure, in kPa.

Example:

M_{H2O} = 18.01528 g/mol

p_{d} = 2.93 kPa

RH % = 37.5%

M_{air} = 28.96559 g/mol

p_{atmos} = 96.71 kPa

$$H = \frac{1000\cdot 18.01528\cdot 2.93\cdot 37.5\cdot 0.01}{28.96559\cdot\left(96.71-2.93\cdot 37.5\cdot 0.01\right)} = 7.14741 \text{ g } H_2O \text{ vapor/kg dry air}$$

(2) Use the following equation to correct measured concentrations to a reference condition of 10.71 grams H_2O vapor per kilogram of dry air for the FTP, US06, LA–92, SC03, and HFET test cycles:

$$x_{\mathrm{NOxdexhcor}} = x_{\mathrm{NOxdexh}} \cdot \frac{H_s}{1 - 0.0329 \cdot (H - 10.71)}$$

Eq. 1066.630-2

Where:

χ_{NOxdexh} = measured dilute NO_X emissions.

H_s = humidity scale. Set = 1 for FTP, US06, LA–92, and HFET test cycles. Set = 0.8825 for the SC03 test cycle.

H = absolute humidity, from paragraph (a)(1) of this section.

Example:

H = 7.14741 g H2O vapor/kg dry air

χ_{NOxdexh} = 1.21 ppm

$$x_{\mathrm{NOxdexhcor}} = 1.21 \cdot \frac{1}{1 - 0.0329 \cdot (7.14741 - 10.71)} = 1.08305 \text{ ppm}$$

(b) For vehicles above 14,000 pounds GVWR, apply correction factors as described in 40 CFR 1065.670.

§ 1066.640 Removed water correction.

Correct for removed water if water removal occurs upstream of a concentration measurement and downstream of a flow meter used to determine mass emissions over a test interval. Perform this correction based on the amount of water at the concentration measurement and on the amount of water at the flow meter.

§ 1066.650 Flow meter calibration calculations.

This section describes how to calibrate various flow meters based on mass flow rates. Calibrate your flow meter according to 40 CFR 1065.640 instead if you calculate emissions based on molar flow rates.

(a) *PDP calibration calculations.* Perform the following steps to calibrate a PDP flow meter:

(1) Calculate PDP volume pumped per revolution, V_{rev}, for each restrictor position from the mean values determined in § 1066.140:

$$V_{\mathrm{rev}} = \frac{\overline{\dot{Q}}_{\mathrm{ref}} \cdot \overline{T}_{\mathrm{in}} \cdot p_{\mathrm{std}}}{\overline{f}_{\mathrm{nPDP}} \cdot \overline{p}_{\mathrm{in}} \cdot T_{\mathrm{std}}}$$

Eq. 1066.650-1

Where:

$\overline{\dot{Q}}_{\mathrm{ref}}$ = mean flow rate of the reference flow meter.

T_{in} = mean temperature at the PDP inlet.

P_{std} = standard pressure = 101.325 kPa.

$\overline{f}_{\mathrm{nPDP}}$ = mean PDP speed.

$\overline{p}_{\mathrm{in}}$ = mean static absolute pressure at the PDP inlet.

T_{std} = standard temperature = 293.15 K.

Example:

$\overline{\dot{Q}}_{\mathrm{ref}}$ = 0.1651 m³/s

$\overline{T}_{\mathrm{in}}$ = 299.5 K

p_{std} = 101.325 kPa

$\overline{f}_{\mathrm{nPDP}}$ = 1205.1 r/min = 20.085 r/s

$\overline{p}_{\mathrm{in}}$ = 98.290 kPa

T_{std} = 293.15 K

$$V_{rev} = \frac{0.1651 \cdot 299.5 \cdot 101.3}{20.085 \cdot 98.290 \cdot 293.15}$$

V_{rev} = 0.00866 m³/r

(2) Calculate a PDP slip correction factor, K_s for each restrictor position from the mean values determined in § 1066.140:

$$K_s = \frac{1}{\overline{f}_{\mathrm{nPDP}}} \cdot \sqrt{\frac{\overline{p}_{\mathrm{out}} - \overline{p}_{\mathrm{in}}}{\overline{p}_{\mathrm{out}}}}$$

Eq. 1066.650-2

Where:

$\overline{f}_{\mathrm{nPDP}}$ = mean PDP speed.

$\overline{p}_{\mathrm{out}}$ = mean static absolute pressure at the PDP outlet.

$\overline{p}_{\mathrm{in}}$ = mean static absolute pressure at the PDP inlet.

Example:

$\overline{f}_{\mathrm{nPDP}}$ = 1205.1 r/min = 20.085 r/s

$\overline{p}_{\mathrm{out}}$ = 100.103 kPa

$\overline{p}_{\mathrm{in}}$ = 98.290 kPa

$$K_s = \frac{1}{20.085} \cdot \sqrt{\frac{100.103 - 98.290}{100.103}}$$

K_s = 0.006700 s/r

(3) Perform a least-squares regression of V_{rev}, versus PDP K_s, by calculating slope, a_1, and intercept, a_0, as described in 40 CFR 1065.602.

(4) Repeat the procedure in paragraphs (a)(1) through (3) of this section for every speed that you run your PDP.

(5) The following example illustrates a range of typical values for different PDP speeds:

TABLE 1 OF § 1066.650—EXAMPLE OF PDP CALIBRATION DATA

$\overline{f}_{\mathrm{nPDP}}$ (r/s)	a_1 (m³/s)	a_0 (m³/r)
12.6	0.841	0.056
16.5	0.831	−0.013
20.9	0.809	0.028
23.4	0.788	−0.061

(6) For each speed at which you operate the PDP, use the appropriate regression equation from this paragraph (a) to calculate flow rate during emission testing as described in § 1066.652.

(b) *SSV calibration.* The equations governing SSV flow assume one-dimensional isentropic inviscid flow of an ideal gas, except that the equations can account for compressible flow. Paragraph (b)(2)(iv) of this section describes other assumptions that may apply. If good engineering judgment dictates that you account for gas compressibility, you may either use an appropriate equation of state to determine values of Z as a function of measured pressure and temperature, or you may develop your own calibration equations based on good engineering judgment. Note that the equation for the flow coefficient, C_f, is based on the ideal gas assumption that the isentropic exponent, γ, is equal to the ratio of specific heats, C_p/C_v. If good engineering judgment dictates using a real gas isentropic exponent, you may either use an appropriate equation of state to determine values of γ as a function of measured pressure and temperature, or you may develop your own calibration equations based on good engineering judgment.

(1) Calculate volumetric flow rate, $\dot{Q}$, as follows:

$$\dot{Q} = C_d \cdot C_f \cdot \frac{A_t \cdot R \cdot p_{in} \cdot T_{std}}{p_{std} \cdot \sqrt{Z \cdot M_{mix} \cdot R \cdot T_{in}}}$$

Eq. 1066.650-3

Where:

C_d = discharge coefficient, as determined in paragraph (b)(2)(i) of this section.

C_f = flow coefficient, as determined in paragraph (b)(2)(ii) of this section.

A_t = cross-sectional area at the venturi throat.

R = molar gas constant.

p_{in} = static absolute pressure at the venturi inlet.

T_{std} = standard temperature.

p_{std} = standard pressure.

Z = compressibility factor.

M_{mix} = molar mass of gas mixture.

T_{in} = absolute temperature at the venturi inlet.

(2) Perform the following steps to calibrate an SSV flow meter:

(i) Using the data collected in § 1066.140, calculate C_d for each flow rate using the following equation:

$$C_d = \dot{Q}_{ref} \cdot \frac{p_{std} \cdot \sqrt{Z \cdot M_{mix} \cdot R \cdot T_{in}}}{C_f \cdot A_t \cdot R \cdot p_{in} \cdot T_{std}}$$

Eq. 1066.650-4

Where:

$\dot{Q}_{ref}$ = measured volumetric flow rate from the reference flow meter.

(ii) Use the following equation to calculate C_f for each flow rate:

$$C_f = \left[\frac{2 \cdot \gamma \cdot \left(r^{\frac{\gamma-1}{\gamma}} - 1 \right)}{(\gamma - 1) \cdot \left(\beta^4 - r^{\frac{-2}{\gamma}} \right)} \right]^{\frac{1}{2}}$$

Eq. 1066.650-5

Where:

γ = isentropic exponent. For an ideal gas, this is the ratio of specific heats of the gas mixture, C_p/C_v.

r = pressure ratio, as determined in paragraph (b)(2)(iii) of this section.

β = ratio of venturi throat diameter to inlet diameter.

(iii) Calculate r using the following equation:

$$r = 1 - \frac{\Delta p}{p_{in}}$$

Eq. 1066.650-6

Where:

Δp = differential static pressure, calculated as venturi inlet pressure minus venturi throat pressure.

(iv) You may apply any of the following simplifying assumptions or develop other values as appropriate for your test configuration, consistent with good engineering judgment:

(A) For raw exhaust, diluted exhaust, and dilution air, you may assume that the gas mixture is incompressible and therefore behaves as an ideal gas (Z = 1).

(B) For raw exhaust, you may assume □ = 1.385.

(C) For diluted exhaust and dilution air, you may assume □ = 1.399.

(D) For diluted exhaust and dilution air, you may assume M_{mix} is a function only of the amount of water in the dilution air or calibration air, x_{H2O}, as follows:

$$M_{mix} = M_{air} \cdot (1 - x_{H2O}) + M_{H_2O} \cdot x_{H2O}$$

Eq. 1066.650-7

Where:

M_{air} = 28.964 g/mol

x_{H2O} = amount of H_2O in the dilution air, determined as described in 40 CFR 1065.645.

M_{H20} = 18.015 g/mol

Example:

x_{H2O} = 0.0169 mol/mol

M_{mix} =28.964·(1 − 0169) + 18.015·0.0169

M_{mix} = 28.7789 g/mol

(E) For diluted exhaust and dilution air, you may assume a constant molar mass of the mixture, M_{mix}, for all calibration and all testing if you control the amount of water in calibration air and in dilution air, as shown in the following table:

TABLE 2 OF § 1066.650—EXAMPLES OF DILUTION AIR AND CALIBRATION AIR DEWPOINTS AT WHICH YOU MAY ASSUME A CONSTANT M_{mix}.

If calibration T_{dew} (°C) is . . .	assume the following constant M_{mix} (g/mol) . . .	for the following ranges of T_{dew} (°C) during emission tests[a]
≤ 0	28.96559	≤ 18
0	28.89263	≤ 21
5	28.86148	≤ 22
10	28.81911	≤ 24
15	28.76224	≤ 26
20	28.68685	−8 to 28
25	28.58806	12 to 31
30	28.46005	23 to 34

[a] The specified ranges are valid for all calibration and emission testing over the atmospheric pressure range (80.000 to 103.325) kPa.

(v) The following example illustrates the use of the governing equations to calculate C_d of an SSV flow meter at one reference flow meter value:

Example:

$\dot{Q}$ = 2.395 m³/s

Z = 1

M_{mix} = 28.7789 g/mol = 0.0287789 kg/mol

R = 8.314472 J/(mol·K) = 8.314472 (m²·kg)/(s²·mol·K)

T_{in} = 298.15 K

A_t = 0.01824 m²

p_{in} = 99.132 kPa = 99132 Pa = 99132 kg/(m·s²)

γ = 1.399

β = 0.8

Δp = 2.312 kPa

Δp = 2.312 kPa

$$C_f = \left[\frac{2 \cdot 1.399 \cdot \left(0.977^{\frac{1.399-1}{1.399}} - 1\right)}{(1.399-1) \cdot \left(0.8^4 - 0.977^{\frac{-2}{1.399}}\right)} \right]^{\frac{1}{2}}$$

$C_f = 0.274$

$$C_d = 2.395 \cdot \frac{101.325 \cdot \sqrt{1 \cdot 0.0287789 \cdot 8.314472 \cdot 298.15}}{0.274 \cdot 0.01824 \cdot 8.314472 \cdot 99132 \cdot 293.15}$$

$C_d = 1.695$

(vi) Calculate the Reynolds number, $Re^{\#}$, for each reference volumetric flow rate$\dot{Q}^{ref}$, using the throat diameter of the venturi, d_t, and the uncorrected air density, ρ. Because the dynamic viscosity, μ, is needed to compute $Re^{\#}$, you may use your own fluid viscosity model to determine μ for your calibration gas (usually air), using good engineering judgment. Alternatively, you may use the Sutherland three-coefficient viscosity model to approximate μ, as shown in the following sample calculation for $Re^{\#}$:

$$Re^{\#} = \frac{4 \cdot \rho \cdot \dot{Q}_{ref}}{\pi \cdot d_t \cdot \mu}$$

Eq. 1066.650-8

Where, using the Sutherland three-coefficient viscosity model:

$$\mu = \mu_0 \cdot \left(\frac{T_{in}}{T_0}\right)^{\frac{3}{2}} \cdot \left(\frac{T_0 + S}{T_{in} + S}\right)$$

Eq. 1066.650-9

Where:

μ_0 = Sutherland reference viscosity.
T_0 = Sutherland reference temperature.
S = Sutherland constant.

TABLE 3 OF § 1065.640—SUTHERLAND THREE-COEFFICIENT VISCOSITY MODEL PARAMETERS

Gas[a]	μ_0	T_0	S	Temp range within ±2% error[b]	Pressure limit[b]
	kg/(m·s)	K	K	K	kPa
Air	$1.716 \cdot 10^{-5}$	273	111	170 to 1900	≤ 1800
CO_2	$1.370 \cdot 10^{-5}$	273	222	190 to 1700	≤ 3600
H_2O	$1.12 \cdot 10^{-5}$	350	1064	360 to 1500	≤ 10000
O_2	$1.919 \cdot 10^{-5}$	273	139	190 to 2000	≤ 2500
N_2	$1.663 \cdot 10^{-5}$	273	107	100 to 1500	≤ 1600

[a] Use tabulated parameters only for the pure gases, as listed. Do not combine parameters in calculations to calculate viscosities of gas mixtures.
[b] The model results are valid only for ambient conditions in the specified ranges.

Example:
$\mu_0 = 1.716 \cdot 10^{-5}$ kg/(m·s)
$T_0 = 273$ K
$S = 111$ K

$$\mu = 1.716 \cdot 10^{-5} \cdot \left(\frac{298.15}{273.}\right)^{\frac{3}{2}} \cdot \left(\frac{273+111}{298.15+111}\right)$$

$\mu = 1.838 \cdot 10^{-5}$ kg/(m·s)
$T_{in} = 298.15$ K
$d_t = 152.4$ mm = 0.1524 m
$\rho = 1.1508$ kg/m³

$$Re^{\#} = \frac{4 \cdot 1.1508 \cdot 2.395}{3.14159 \cdot 0.1524 \cdot 1.838 \cdot 10^{-5}}$$

$Re^{\#} = 1.2531 \cdot 10^6$

(vii) Calculate ρ using the following equation:

$$\rho = \frac{p_{in} \cdot MW_{mix}}{R \cdot T_{in}}$$

Eq. 1066.650-10

Example:

$$\rho = \frac{99132 \cdot 0.0287789}{8.314472 \cdot 298.15}$$

$\rho = 1.1508$ kg/m³

(vii) Create an equation for C_d as a function of $Re^{\#}$, using paired values of the two quantitites. The equation may involve any mathematical expression, including a polynomial or a power series. The following equation is an example of a commonly used mathematical expression for relating C_d and $Re^{\#}$:

$$C_d = a_0 - a_1 \cdot \sqrt{\frac{10^6}{Re^{\#}}}$$

Eq. 1066.650-11

(viii) Perform a least-squares regression analysis to determine the best-fit coefficients for the equation and calculate the equation's regression statistics, *SEE* and r^2, according to § 1065.602.

(ix) If the equation meets the criteria of $SEE \leq (0.5\% \cdot \dot{Q}_{refmax})$ and $r^2 \geq 0.995$, you may use the equation to determine C_d for emission tests, as described in § 1065.642.

(x) If the equation does not meet the specified statistical criteria, you may use good engineering judgment to omit calibration data points; however, you must use at least seven calibration data points to demonstrate that you meet the criteria. For example, this may involve narrowing the range of flow rates for a better curve fit.

(xi) Take corrective action if the equation does not meet the specified statistical criteria even after omitting calibration data points. For example, select another mathematical expression for the C_d versus $Re^{\#}$ equation, check for leaks, or repeat the calibration process. If you must repeat the calibration process, we recommend applying tighter tolerances to measurements and allowing more time for flows to stabilize.

(xii) Once you have an equation that meets the specified statistical criteria, you may use the equation only for the corresponding range of flow rates.

(c) *CFV calibration.* Some CFV flow meters consist of a single venturi and some consist of multiple venturis, where different combinations of venturis are used to meter different flow rates. For CFV flow meters that consist of multiple venturis, either calibrate each venturi independently to determine a separate calibration coefficient, K_v, for each venturi, or calibrate each combination of venturis as one venturi by determining K_v for the system.

(1) To determine K_v for a single venturi or a combination of venturis, perform the following steps:

(i) Calculate an individual K_v for each calibration set point for each restrictor position using the following equation:

$$K_v = \frac{\bar{\dot{Q}}_{refstd} \cdot \sqrt{\bar{T}_{in}}}{\bar{p}_{in}}$$

Eq. 1066.650-12

Where:

$\dot{Q}_{refstd}$ = mean flow rate from the reference flow meter, at standard reference conditions.

$\bar{T}_{in}$ = mean temperature at the venturi inlet.

$\bar{P}_{in}$ = mean static absolute pressure at the venturi inlet.

(ii) Calculate the mean and standard deviation of all the K_v values (see 40 CFR 1065.602). Verify choked flow by plotting K_v as a function of $\bar{P}_{in}$. K_v will have a relatively constant value for choked flow; as vacuum pressure increases, the venturi will become unchoked and K_v will decrease. Paragraphs (c)(1)(iii) through (viii) of this section describe how to verify your range of choked flow.

(iii) If the standard deviation of all the K_v values is less than or equal to 0.3% of the mean K_v, use the mean K_v in Eq. 1066.652–7, and use the CFV only up to the highest venturi pressure ratio, *r*, measured during calibration using the following equation:

$$r = 1 - \frac{\Delta p_{CFV}}{\bar{p}_{in}}$$

Eq. 1066.650-13

Where:

Δp_{CFV} = differential static pressure; venturi inlet minus venturi outlet.

(iv) If the standard deviation of all the K_v values exceeds 0.3% of the mean K_v, omit the K_v value corresponding to the data point collected at the highest *r* measured during calibration.

(v) If the number of remaining data points is less than seven, take corrective action by checking your calibration data or repeating the calibration process. If you repeat the calibration process, we recommend checking for leaks, applying tighter tolerances to measurements and allowing more time for flows to stabilize.

(vi) If the number of remaining K_v values is seven or greater, recalculate the mean and standard deviation of the remaining K_v values.

(vii) If the standard deviation of the remaining K_v values is less than or equal to 0.3% of the mean of the remaining K_v, use that mean K_v in Eq 1066.652–7, and use the CFV values only up to the highest *r* associated with the remaining K_v.

(viii) If the standard deviation of the remaining K_v still exceeds 0.3% of the mean of the remaining K_v values, repeat the steps in paragraph (c)(1)(iv) through (vii) of this section.

(2) During exhaust emission tests, monitor sonic flow in the CFV by monitoring the CFV pressure ratio. Based on the calibration data selected to meet the criteria for paragraphs (c)(1)(iv) and (vii) of this section, in which K_v is constant, select the data values associated with the calibration point with the lowest absolute venturi inlet pressure to determine the *r* limit. Calculate *r* during the exhaust emission test using Eq. 1066.650–8 to demonstrate that the value of *r* during all emission tests is less than or equal to the *r* limit derived from the CFV calibration data.

§ 1066.652 PDP, SSV, and CFV flow rate calculations.

This section describes the equations for calculating flow rates from various flow meters. After you calibrate a flow meter according to § 1066.650, use the calculations described in this section to calculate flow during an emission test. Calculate flow according to 40 CFR 1065.642 instead if you calculate emissions based on molar flow rates.

(a) *PDP volumetric flow rate.* Based upon the speed at which you operate the PDP for a test interval, select the corresponding slope, a_1, and intercept, a_0, as calculated in § 1066.650(a), to calculate volumetric flow rate, $\dot{Q}$ as follows:

$$\dot{Q} = f_{nPDP} \cdot \frac{V_{rev} \cdot T_{std} \cdot p_{in}}{T_{in} \cdot p_{std}}$$

Eq. 1066.652-1

Where:

f_{nPDP} = pump speed.

V_{rev} = PDP volume pumped per revolution.

T_{std} = standard temperature = 293.15 K.

p_{in} = static absolute pressure at the PDP inlet.

T_{in} = pump inlet absolute temperature.

p_{std} = standard pressure = 101.325 kPa.

P^{out} = static absolute pressure at the PDP outlet.

$$V_{rev} = \frac{a_1}{f_{nPDP}} \cdot \sqrt{\frac{p_{out} - p_{in}}{p_{out}}} + a_0$$

Eq. 1066.652-2

Example:

a_1 = 50.43 m³/min = 0.8405 m³/s

f_{nPDP} = 755.0 r/min = 12.58 r/s

p^{out} = 99.950 kPa

p^{in} = 98.575 kPa

a_0 = 0.056 m³/r

T^{in} = 323.5 K

$$V_{rev} = \frac{0.8405}{12.58} \cdot \sqrt{\frac{99.950 - 98.575}{99.950}} + 0.056$$

V_{rev} = 0.063 m³/r

$$\dot{Q} = 12.58 \cdot \frac{0.06383 \cdot 293.15 \cdot 98.575}{323.5 \cdot 101.3}$$

$\dot{Q}$ = 0.7079 m³/s

(b) *SSV volumetric flow rate.* Calculate SSV volumetric flow rate during an emission test, $\dot{Q}$, as follows:

$$\dot{Q} = C_d \cdot C_f \cdot \frac{A_t \cdot R \cdot p_{in} \cdot T_{std}}{p_{std} \cdot \sqrt{Z \cdot M_{mix} \cdot R \cdot T_{in}}}$$

Eq. 1066.652-3

Where:

C_d = discharge coefficient, as determined based on the C_d versus $Re^{\#}$ equation in § 1066.650(b)(2)(viii).

C_f = flow coefficient, as determined in § 1066.650 (b)(2)(ii).

A_t = venturi throat cross-sectional area.

R = molar gas constant.

p_{in} = static absolute pressure at the venturi inlet.

T_{std} = standard temperature.

p_{std} = standard pressure.

Z = compressibility factor.

M_{mix} = molar mass of gas mixture.

T_{in} = absolute temperature at the venturi inlet.

Example:

C_d = 0.890

C_f = 0.274

A_t = 0.01824 m²

R = 8.314472 J/(mol·K) = 8.314472 (m²·kg)/(s²·mol·K)

p_{in} = 98.496 kPa

T_{std} = 293.15 K

p_{std} = 101.325 kPa

Z = 1

M_{mix} = 28.7789 g/mol = 0.0287789 kg/mol

T_{in} = 296.85 K

$$\dot{Q} = 0.89 \cdot 0.274 \cdot \frac{0.01824 \cdot 8.314472 \cdot 98.496 \cdot 293.15}{101.325 \cdot \sqrt{1 \cdot 0.0287789 \cdot 8.314472 \cdot 296.85}}$$

$\dot{Q}$ = 1.252 m³/s

(c) *CFV volumetric flow rate.* Some CFV flow meters consist of a single venturi and some consist of multiple venturis, where different combinations of venturis are used to meter different flow rates. If you use multiple venturis and you calibrated each venturi independently to determine a separate calibration coefficient, K_v, for each venturi, calculate the individual volumetric flow rates through each venturi and sum all their flow rates to determine $\dot{Q}$. If you use multiple venturis and you calibrated each combination of venturis, calculate $\dot{Q}$ using the K_v that was determined for that combination of venturis.

(1) To calculate volumetric flow rate through one venturi or a combination of venturis, use the mean K_v you determined according to § 1066.650(c) and calculate the appropriate volumetric flow rate, $\dot{Q}$, during an emission test as follows:

$$\dot{Q} = \frac{K_v \cdot p_{in}}{\sqrt{T_{in}}}$$

Eq. 1066.652-7

Where:

$\dot{Q}$ = air flow rate of flow meter, in m³/s.

K_v = flow meter calibration coefficient, in m³·K^1/2/(kPa·s).

T_{in} = temperature at the venturi inlet, in K.

p_{in} = absolute static pressure at the venturi inlet, in kPa.

Example:

K_v = 0.074954 m³·K^1/2/(kPa·s)

p_{in} = 99.654 kPa

T_{in} = 353.15 K

$$\dot{Q} = \frac{0.074954 \cdot 99.654}{\sqrt{353.15}}$$

$\dot{Q}$ = 0.39748 m³/s

(2) [Reserved]

§ 1066.665 NMOG determination.

For vehicles subject to an NMOG standard, determine NMOG as described in paragraph (a) of this section. Except as specified in the standard-setting part, you may alternatively calculate NMOG results based on measured NMHC emissions as described in paragraphs (c) through (f) of this section.

(a) Determine NMOG by independently measuring alcohols and carbonyls as described in 40 CFR 1065.805 and 1065.845. Use good engineering judgment to determine which alcohols and carbonyls you need to measure. This would typically require you to measure all alcohols and carbonyls that you expect to contribute 1% or more of total NMOG emissions. Calculate NMOG with the following equation, using density values specified in § 1066.1005(f):

$$m_{NMOG} = m_{NMHC} - \rho_{NMHC} \cdot \sum_{i=1}^{N} \frac{m_{OHCi}}{\rho_{OHCi}} \cdot RF_{OHCi[THC\text{-}FID]} + \sum_{i=1}^{N} m_{OHCi}$$

Eq. 1066.665-1

Where:

m_{NMOG} = the sum of the mass of NMOG in the exhaust.

m_{NMHC} = the mass of NMHC and all oxygenated hydrocarbons (OHCs) in the exhaust, as determined using Eq. 1066.610–1. Calculate NMHC mass based on ρ_{NMHC}.

ρ_{NMHC} = the effective C_1-equivalent density of NMHC as specified in § 1066.1005(f):.

m_{OHCi} = the mass of oxygenated species *i* in the exhaust calculated using Eq. 1066.610–1.

ρ_{OCHi} = the C_1-equivalent density of oxygenated species *i*.

$RF_{OHCi[THC-FID]}$ = The response factor of a THC–FID to oxygenated species *i* relative to propane on a C_1-equivalent basis as determined in 40 CFR 1065.665.

(b) The following example shows how to determine NMOG emissions as described in paragraph (a) of this section for (OHC) compounds including ethanol (C_2H_5OH), methanol (CH_3OH), acetaldehyde (C_2H_4O), and formaldehyde (C_2HO) as C_1-equivalent concentrations:

m_{NMHC} = 0.0125 g

m_{CH3OH} = 0.0002 g

m_{C2H5OH} = 0.0009 g

m_{HCHO} = 0.0001 g

m_{C2H4O} = 0.00005 g

$RF_{CH3OH[THC-FID]}$ = 0.63

$RF_{C2H5OH[THC-FID]}$ = 0.75

$RF_{HCHO[THC-FID]}$ = 0.00

$RF_{C2H4O[THC-FID]}$ = 0.50

$\rho_{NMHC\text{-}liq}$ = 576.816 g/m³

ρ_{CH3OH} = 1332.02 g/m³

ρ_{C2H5OH} = 957.559 g/m³

ρ_{HCHO} = 1248.21 g/m³

ρ_{C2H4O} = 915.658 g/m³

$$m_{NMOG} = 0.0125 - 576.816 \cdot \left(\frac{0.0002}{1332.02} \cdot 0.63 + \frac{0.0009}{957.559} \cdot 0.75 + \frac{0.0001}{1248.21} \cdot 0.00 + \frac{0.00005}{915.658} \cdot 0.5 \right) + 0.0002 + 0.0009 + 0.0001 + 0.00005$$

0.0002 + 0.0009 + 0.0001 + 0.00005
m_{NMOG} = 0.013273

(c) For ethanol-gasoline blends less than 25% ethanol by volume, you may calculate NMOG emissions from measured NMHC emissions as follows:

(1) For hot-start and hot running test cycles or intervals other than the FTP, you may determine NMOG based on the test cycle NMHC emission rate using the following equation:

$$e_{NMOGhot} = e_{NMHChot} \cdot 1.03$$

Eq. 1066.665-2

Where:

$e_{NMOGhot}$ = mass emission rate of NMOG over the hot running test cycle.

$e_{NMHChot}$ = mass emission rate of NMHC over the hot running test cycle, calculated using $\rho_{NMHC\text{-}liq}$.

Example:

$e_{NMHChot}$ = 0.025 g/mi

$e_{NMOGhot}$ = 0.025 · 1.03 = 0.026 g/mi

(2) You may determine weighted composite NMOG for FTP testing based on the weighted composite NMHC emission rate and the volume percent of ethanol in the fuel using the following equation:

$$e_{NMOGcomp} = e_{NMHCcomp} \cdot \left(1.0302 + 0.0071 \cdot VP_{EtOH}\right)$$

Eq. 1066.665-3

Where:

$e_{NMOGcomp}$ = weighted composite mass emission rate of NMOG.

$e_{NMHCcomp}$ = weighted composite mass emission rate of NMHC, calculated using $\rho_{NMHC\text{-}liq}$.

VP_{EtOH} = volume percentage of ethanol in the test fuel. Use good engineering judgment to determine this value either as specified in 40 CFR 1065.710 or based on blending volumes, taking into account any denaturant.

Example:

$e_{NMHCcomp}$ = 0.025 g/mi

$e_{NMOGcomp}$ = 0.025 · (1.0302 + 0.0071 · 15.1) = 0.0284 g/mi

VP_{EtOH} = 15.1%

(3) You may determine NMOG for the complete FTP cold-start test interval for use in fuel economy and CREE calculations based on the NMHC emission rate for the test interval and the volume percent of ethanol in the fuel using the following equation:

$$e_{NMOG\text{-}FTPct} = e_{NMHC\text{-}FTPct} \cdot \left(1.0246 + 0.0079 \cdot VP_{EtOH}\right)$$

Eq. 1066.665-4

Where:

$e_{NMOG\text{-}FTPct}$ = mass emission rate of NMOG over the FTP cold start test interval.

$e_{NMHC\text{-}FTPct}$ = mass emission rate of NMHC over the FTP cold-start test interval, calculated using $\rho_{NMHC\text{-}liq}$.

VP_{EtOH} = volume percentage of ethanol in the test fuel.

Example:

$e_{NMHC\text{-}FTPct}$ = 0.052 g/mi
VP_{EtOH} = 15.1%
$e_{NMOG\text{-}FTPct}$ = 0.052·1.0246 + 0.0079·15.1) = 0.0595 g/mi

(4) You may determine NMOG for the FTP stabilized test interval for either the cold-start or hot-start test for use in fuel economy and CREE calculations based on the NMHC emission rate for the test interval and the volume percent of ethanol in the fuel using the following equation:

$$e_{NMOG\text{-}FTPcs\text{-}hs} = e_{NMHC\text{-}FTPcs\text{-}hs} \cdot \left(1.1135 + 0.001 \cdot VP_{EtOH}\right)$$

Eq. 1066.665-5

Where:

$e_{NMOG\text{-}FTPcs\text{-}hs}$ = mass emission rate of NMOG over the FTP stabilized test interval.

$e_{NMHC\text{-}FTPcs\text{-}hs}$ = mass emission rate of NMHC over the FTP stabilized test interval, calculated using $\rho_{NMHC\text{-}liq}$.

VP_{EtOH} = volume percentage of ethanol in the test fuel.

(5) You may determine NMOG for the complete FTP hot-start test interval for use in fuel economy and CREE calculations based on the NMHC emission rate for the test interval and the volume percent of ethanol in the fuel using the following equation:

$$e_{\text{NMOG-FTPht}} = e_{\text{NMHC-FTPht}} \cdot \left(1.0195 + 0.0031 \cdot VP_{\text{EtOH}}\right)$$

Eq. 1066.665-6

Where:

$e_{\text{NMOG-FTPht}}$ = mass emission rate of NMOG over the FTP hot-start test interval.

$e_{\text{NMHC-FTPht}}$ = mass emission rate of NMHC over the FTP hot-start test interval, calculated using $\rho_{\text{NMHC-liq}}$.

VP_{EtOH} = volume percentage of ethanol in the test fuel.

(d) You may take the following additional steps when determining fuel economy and CREE under 40 CFR part 600:

(1) Calculate NMOG by interval using Eq. 1066.665–3 for individual bag measurements from the FTP.

(2) Calculate NMOG for two-bag FTPs using Eq. 1066.665–3 for hybrid-electric vehicles as described in 40 CFR 600.114.

(e) We consider NMOG emission values for diesel-fueled vehicles, CNG-fueled vehicles, and LPG-fueled vehicles to be equivalent to NMHC emission values for all test cycles.

(f) For all fuels not covered by paragraphs (c) and (e) of this section, manufacturers may propose a methodology to calculate NMOG results from measured NMHC emissions. We will approve adjustments based on comparative testing that demonstrates how to properly represent NMOG based on measured NMHC emissions.

§ 1066.695 Data requirements.

Record the following information for each test:

(a) Test number.

(b) A brief description of the test vehicle (or other system/device tested).

(c) Date and time of day for each part of the test sequence.

(d) Test results. Also include a validation of driver accuracy as described in § 1066.430(j).

(e) Driver and equipment operators.

(f) Vehicle information as applicable, including identification number, model year, applicable emission standards, vehicle model, vehicle class, carline, test group, durability group, engine family, evaporative/refueling emission family, basic engine description (including displacement, number of cylinders, turbocharger/supercharger used, and catalyst type), fuel system (type of fuel injection and fuel tank capacity and location), engine code, gross vehicle weight rating, equivalent test weight, inertia weight class, actual curb weight at zero miles, actual road load at 50 mph, transmission class and configuration, axle ratio, odometer reading, idle rpm, and drive wheel tire pressure.

(g) Dynamometer identification, inertia weight setting, indicated power absorption setting, and records to verify compliance with the driving distance and cycle-validation criteria as calculated from measured roll or shaft revolutions.

(h) Analyzer bench identification, analyzer ranges, recordings of analyzer output during zero, span, and sample readings.

(i) Associate the following information with the test record: Test number, date, vehicle identification, vehicle and equipment operators, and identification of the measurements recorded.

(j) Test cell barometric pressure and humidity. You may use a central laboratory barometer if the barometric pressure in each test cell is shown to be within ±0.1% of the barometric pressure at the central barometer location.

(k) Records to verify compliance with the ambient temperature requirements throughout the test procedure and records of fuel temperatures during the running loss test.

(l) [Reserved]

(m) For CVS systems record, dilution factor for each interval of the exhaust test and the following additional information:

(1) CFV and SSV V_{mix} for each interval of the exhaust test.

(2) *PDP.* Test measurements required to calculate V_{mix} for each interval of the exhaust test.

(n) The humidity of the dilution air if you remove H_2O from an emission sample before measurement.

(o) Temperature of the dilute exhaust mixture and secondary dilution air (in the case of a double-dilution system) at the inlet to the respective gas meter or flow instrumentation used for particulate sampling.

(p) The maximum gas temperature over the course of the test within 20 cm upstream or downstream of the sample media (e.g., filter).

(q) If applicable, the temperature of the heated FID, the gas in the heated sample line, and the heated filter.

(r) Gas meter or flow measurement instrumentation readings at the start and end of each test interval.

(s) The stabilized pre-test weight and post-test weight of each particulate sample media (e.g., filter).

(t) Continuous temperature and humidity of the ambient air in which the particulate sample media (e.g., filter) are stabilized.

(u) For vehicles fueled by natural gas, the test fuel composition, including all carbon-containing compounds (except CO); e.g. CO_2, of the natural gas-fuel used during the test. Record C_1 and C_2 compounds individually. You may record C_3 through C_5 hydrocarbons together, and you may record C_6 and heavier hydrocarbon compounds together.

(v) *Additional required records for liquefied petroleum gas-fueled vehicles.* For vehicles fueled by liquefied petroleum gas, the test fuel composition, including all carbon-containing compounds (except CO); e.g. CO_2. Each hydrocarbon compound present, through C_4 compounds, shall be individually reported. C_5 and heavier hydrocarbons may be reported as a group. Record C_1 and C_4 compounds individually. You may record C_5 and heavier hydrocarbon compounds together.

Subpart H—Cold-Temperature Test Procedures

§ 1066.701 Applicability and general provisions.

(a) The procedures of this part 1066 may be used for testing at any ambient temperature. Section 1066.710 describes the provisions that apply for testing testing motor vehicles at a nominal temperature of 20 °C (68 °F); these procedures apply for motor vehicles as described in 40 CFR part 86, subpart S, and 40 CFR part 600. For other vehicles, see the standard-setting part to determine if your vehicle is required to meet emission standards outside the normal (20 to 30) °C (68 to 86 °F) temperature range.

(b) Do not apply the humidity correction factor in § 1066.630(a) for cold-temperature testing.

§ 1066.710 Cold-testing procedures for measuring CO and NMHC emissions and determining fuel economy.

This section describes procedures for measuring carbon monoxide (CO) and nonmethane hydrocarbon (NMHC) emissions and determining fuel economy on a cold day using the FTP driving schedule (see § 1066.801).

(a) Follow the exhaust emission measurement procedures specified in §§ 1066.410 through 1066.430 and

§ 1066.820(d), subject to the following exceptions and additional provisions:

(1) Measure and control ambient conditions as specified in paragraph (b) of this section.

(2) Precondition and stabilize the vehicle as specified in paragraphs (c) and (d) of this section. Ensure that there is no precipitation or dew on the vehicle before the emission test.

(3) For dynamometers that have independently heated bearings, start the emission test within 20 minutes after the end of dynamometer warm up; for other dynamometers, start the emission test within 10 minutes after the end of dynamometer warm up.

(4) Analyze samples for NMHC, CO, and CO_2. You do not need to analyze samples for other pollutants.

(b) Maintain ambient conditions as follows instead of following the specifications in subpart E of this part:

(1) *Ambient temperature for emission tests.* Measure and record ambient temperature in the test cell at least once every 60 seconds during the sampling period. The average temperature during the sampling period must be (−7.0 ±1.7) °C. Instantaneous temperature values may be above −4.0 °C or below −9.0 °C, but not for more than 3 minutes at a time.

(2) *Ambient temperature for preconditioning.* Ambient temperatures must be between (−14.0 and −1.0) °C throughout the preconditioning period. The average ambient temperature during preconditioning must be (−7.0 ±2.8) °C. You may precondition vehicles at temperatures above −7.0 °C or with a temperature tolerance greater than that described in this section (or both) if you determine that this will not cause NMHC, CO, or CO_2 emissions to decrease; if you modify the temperature specifications for vehicle preconditioning, adjust the procedures described in this section appropriately for your testing. Use good engineering judgment to demonstrate that you meet the specified temperature tolerances specified in this paragraph (b)(2).

(3) *Ambient humidity.* Maintain humidity low enough to prevent condensation on the dynamometer rolls during testing.

(c) Take the following steps to prepare and precondition vehicles for testing under this section:

(1) Prepare the vehicle as described in § 1066.814(a).

(2) Fill the fuel tank to approximately 40% of the manufacturer's nominal fuel tank capacity with the appropriate test fuel for low-temperature testing specified 40 CFR part 1065, subpart H. If the leftover fuel in the fuel tank before the refueling event does not meet these specifications, drain the fuel tank before refueling. The temperature of the dispensed test fuel must be at or below 15.5 °C.

(3) You may start the preconditioning drive once the fuel in the fuel tank reaches (−7.0 °C ±5.6) °C. Precondition the vehicle as follows:

(i) Push or drive the vehicle onto the dynamometer.

(ii) Operate the vehicle over one UDDS. You may perform additional vehicle preconditioning with repeated driving over the UDDS, subject to our advance approval.

(iii) Turn off the test vehicle and any cooling fans within 5 minutes after completing the preconditioning drive. Ambient temperature must be between (−12.0 to −1.0) °C in the 5 minutes following the preconditioning drive.

(iv) Do not manually purge or load the evaporative canister.

(d) Soak the vehicle for (12 to 36) hours to stabilize it at test temperatures before starting the emission test as described in this paragraph (d). If you move a stabilized vehicle through a warm area when transporting it to the dynamometer for testing, you must restabilize the vehicle by holding it at an ambient temperature within the range specified in paragraph (b)(1) of this section for at least six times as long as the vehicle was exposed to warmer temperatures. Use one of the following methods to reach a stabilized condition:

(1) *Cold storage.* Measure and record ambient temperature in the test cell at least once every 60 seconds during the soak period; use these measured values to calculate an hourly average temperature. Each hourly average temperature must be (−7.0 °C ±2.8) °C. Instantaneous ambient temperatures during the soak period may be above −1.0 °C or below −12.0, but not for more than 3 minutes at a time.

(2) *Forced-cooling or warming.* Position fans to blow temperature-controlled air onto the vehicle to stabilize the vehicle at the specified temperatures for emission testing. Position fans to target the vehicle's drive train, engine block, and radiator rather than the oil pan. You may not place fans under the vehicle. You may consider the vehicle to be stabilized at the test temperature when the bulk oil temperature reaches (−7 ±1.7) °C; measure oil temperature at one or more points away from the side or bottom surfaces of the oil pan. Each oil temperature measurement must be within the specified range before stabilization is complete. Once the vehicle reaches this stabilized condition, hold the vehicle within the stabilized temperature range for at least one hour before starting the emission test. During this time, keep the ambient temperature within the range specified in paragraph (b)(1) of this section.

Subpart I—Exhaust Emission Test Procedures for Motor Vehicles

§ 1066.801 Applicability and general provisions.

This subpart I specifies how to apply the test procedures of this part for motor vehicles at or below 14,000 pounds GVWR, including light-duty vehicles, light-duty trucks, and heavy-duty vehicles at or below 14,000 pounds GVWR that are subject to chassis testing for exhaust emissions. For these vehicles, references in this part 1066 to the standard-setting part include this subpart I.

(a) Use the procedures detailed in this subpart to measure vehicle emissions over a specified drive schedule in conjunction with subpart E of this part. Where the procedures of subpart E of this part differ from this subpart I, the provisions in this subpart I take precedence.

(b) Collect samples of every pollutant for which an emission standard applies, unless specified otherwise.

(c) This subpart covers the following test procedures:

(1) The Federal Test Procedure (FTP), which includes the general driving cycle. This procedure is also used for measuring evaporative emissions. This may be called the conventional test since it was adopted with the earliest emission standards.

(i) The FTP consists of one Urban Dynamometer Driving Schedule (UDDS) as specified in paragraph (a) of Appendix I of 40 CFR part 86, followed by a 10-minute soak with the engine off and repeat driving through the first 505 seconds of the UDDS. Note that the UDDS represents about 7.5 miles of driving in an urban area. Engine startup (with all accessories turned off), operation over the initial UDDS, and engine shutdown make a complete cold-start test. The hot-start test consists of the first 505 seconds of the UDDS following the 10-minute soak and a hot-running portion of the UDDS after the first 505 seconds. The first 505 seconds of the UDDS is considered the transient portion; the remainder of the UDDS is considered the stabilized (or hot-stabilized) portion. The hot-stabilized portion for the hot-start test is generally measured during the cold-start test; however, in certain cases, the hot-start test may involve a second full UDDS following the 10-minute soak, rather than repeating only the first 505 seconds. See §§ 1066.820 and 1066.822.

(ii) Evaporative emission testing includes a preconditioning drive with the UDDS and a full FTP cycle, including exhaust measurement, followed by evaporative emission measurements. In the three-day diurnal test sequence, the exhaust test is followed by a running loss test consisting of a UDDS, then two New York City Cycles as specified in paragraph (f) of Appendix I of 40 CFR part 86, followed by another UDDS; see 40 CFR 86.134–96. Note that the New York City Cycle represents about 1.7 miles of driving in a city center. The running loss test is followed by a high-temperature hot soak test as described in 40 CFR 86.138–96 and a three-day diurnal emission test as described in 40 CFR 86.133–96. In the two-day diurnal test sequence, the exhaust test is followed by a low-temperature hot soak test as described in 40 CFR 86.138–96(k) and a two-day diurnal emission test as described in 40 CFR 86.133–96(p).

(iii) Refueling emission tests for vehicles that rely on integrated control of diurnal and refueling emissions includes vehicle operation over the full FTP test cycle corresponding to the three-day diurnal test sequence to precondition and purge the evaporative canister. For non-integrated systems, there is a preconditioning drive over the UDDS and a refueling event, followed by repeated UDDS driving purge the evaporative canister. The refueling emission test procedures are described in 40 CFR 86.150 through 86.157.

(2) The Supplemental Federal Test Procedure (SFTP) measures the emission effects from aggressive driving and operation with the vehicle's air conditioner. The SFTP is based on a composite of three different test elements. In addition to the FTP, vehicles generally operate over the US06 and SC03 driving schedules as specified in paragraphs (g) and (h) of Appendix I of 40 CFR part 86, respectively. In the case of heavy-duty vehicles above 10,000 pounds GVWR and at or below 14,000 pounds GVWR, SFTP testing involves additional driving over the LA–92 driving schedule specified in paragraph (c) of 40 CFR part 86, Appendix I, instead of the US06 driving schedule. Note that the US06 driving schedule represents about 8.0 miles of relatively aggressive driving; the SC03 driving schedule represents about 3.6 miles of urban driving with the air conditioner operating; and the LA–92 driving schedule represents about 9.8 miles of relatively aggressive driving for commercial trucks. See §§ 1066.820 and 1066.822.

(3) The Highway Fuel Economy Test (HFET). The HFET is specified in Appendix I of 40 CFR part 600. Note that the HFET represents about 10.2 miles of rural and freeway driving with an average speed of 48.6 mph and a maximum speed of 60.0 mph. See § 1066.839.

(4) Cold-temperature testing. Cold-temperature standards apply for CO and NMHC emissions when vehicles operate over the FTP at a nominal temperature of −7 °C. See 40 CFR part 86, subpart C.

(5) Emission measurement to determine air conditioning credits for greenhouse gas standards. In this optional procedure, manufacturers operate vehicles over repeat runs of the AC17 test sequence to allow for calculating credits as part of demonstrating compliance with CO_2 emission standards. The AC17 test sequence consists of a UDDS preconditioning drive, followed by emission measurements over the SC03 and HFET driving schedules. See § 1066.835.

(d) The following provisions apply for all testing:

(1) Ambient temperatures encountered by the test vehicle must be (20 to 30) °C, unless otherwise specified. Where ambient temperature specifications apply before or between test measurements, the vehicle may be exposed to temperatures outside of the specified range for up to 10 minutes to account for vehicle transport or other actions to prepare for testing. The temperatures monitored during testing must be representative of those experienced by the test vehicle. For example, do not measure ambient temperatures near a heat source.

(2) Do not operate or store the vehicle at an incline if good engineering judgment indicates that it would affect emissions.

(3) If a test is void after collecting emission data from previous test segments, the test may be repeated to collect only those data points needed to complete emission measurements. You may combine emission measurements from different test runs to demonstrate compliance with emission standards.

(4) Prepare vehicles for testing as described in § 1066.814.

(e) The following figure illustrates the FTP test sequence for measuring exhaust and evaporative emissions:

Figure 1 of §1066.801–FTP test sequence.

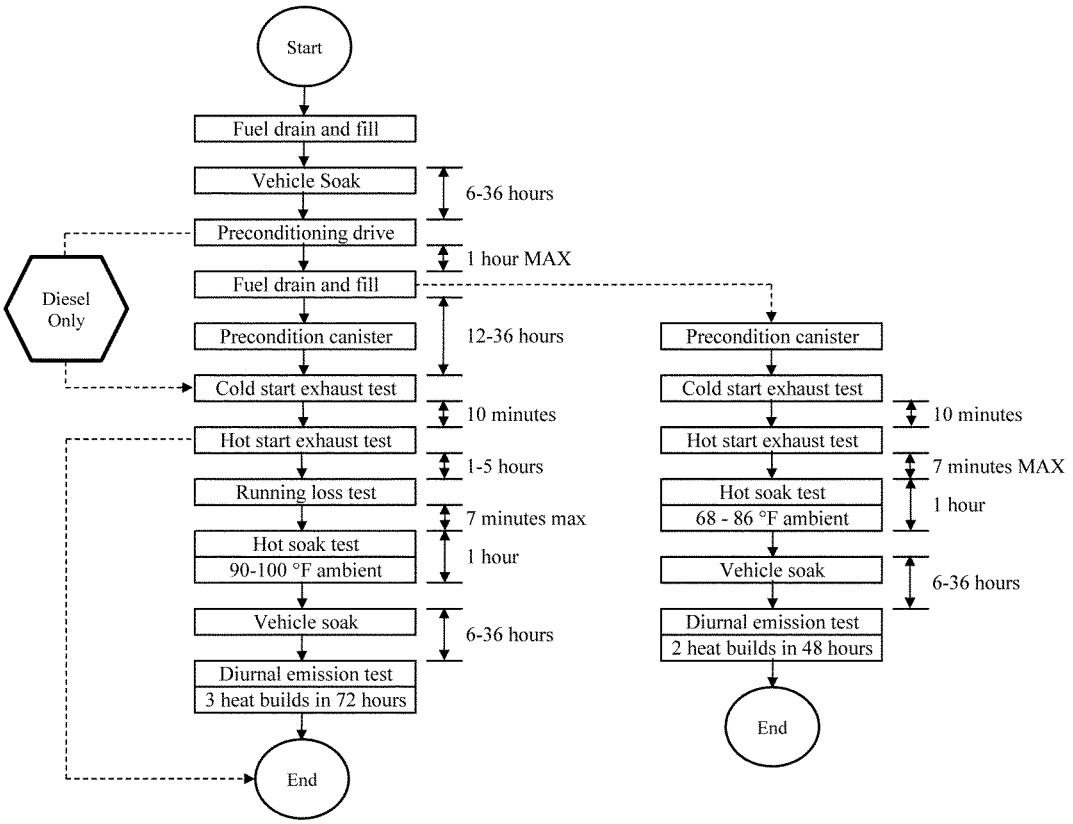

§ 1066.810 Road load power, test weight, and inertia weight class determination.

(a) Simulate a vehicle's test weight on the dynamometer using the appropriate equivalent test weight shown in Table 1 of this section. Equivalent test weights are established according to each vehicle's test weight basis, as described in paragraph (b) of this section. Table 1 also specifies the inertia weight class corresponding to each equivalent test weight; the inertia weight class allows for grouping vehicles with a range of equivalent test weights. Table 1 follows:

TABLE 1 OF § 1066.810—EQUIVALENT TEST WEIGHTS

[pounds]

Test weight basis	Equivalent test weight	Inertia weight class
Up to 1062	1000	1000
1063 to 1187	1125	1000
1188 to 1312	1250	1250
1313 to 1437	1375	1250
1438 to 1562	1500	1500
1563 to 1687	1625	1500
1688 to 1812	1750	1750
1813 to 1937	1875	1750
1938 to 2062	2000	2000
2063 to 2187	2125	2000
2188 to 2312	2250	2250

TABLE 1 OF § 1066.810—EQUIVALENT TEST WEIGHTS—Continued

[pounds]

Test weight basis	Equivalent test weight	Inertia weight class
2313 to 2437	2375	2250
2438 to 2562	2500	2500
2563 to 2687	2625	2500
2688 to 2812	2750	2750
2813 to 2937	2875	2750
2938 to 3062	3000	3000
3063 to 3187	3125	3000
3188 to 3312	3250	3000
3313 to 3437	3375	3500
3438 to 3562	3500	3500
3563 to 3687	3625	3500
3688 to 3812	3750	3500
3813 to 3937	3875	4000
3938 to 4125	4000	4000
4126 to 4375	4250	4000
4376 to 4625	4500	4500
4626 to 4875	4750	4500
4876 to 5125	5000	5000
5126 to 5375	5250	5000
5376 to 5750	5500	5500
5751 to 6250	6000	6000
6251 to 6750	6500	6500
6751 to 7250	7000	7000
7251 to 7750	7500	7500
7751 to 8250	8000	8000
8251 to 8750	8500	8500
8751 to 9250	9000	9000
9251 to 9750	9500	9500

TABLE 1 OF § 1066.810—EQUIVALENT TEST WEIGHTS—Continued

[pounds]

Test weight basis	Equivalent test weight	Inertia weight class
9751 to 10250 ..	10000	10000
10251 to 10750	10500	10500
10751 to 11250	11000	11000
11251 to 11750	11500	11500
11751 to 12250	12000	12000
12251 to 12750	12500	12500
12751 to 13250	13000	13000
13251 to 13750	13500	13500
13751 to 14000	14000	14000

(b) The test weight basis for non-MDPV heavy-duty vehicles is ''adjusted loaded vehicle weight''. For all other vehicles, the test weight basis for establishing equivalent test weight is ''loaded vehicle weight''. These load terms are defined in 40 CFR 86.1803.

(c) For FTP and SFTP testing, determine road load forces for each test vehicle at speeds between 10 and 70 miles per hour. The road load force must represent vehicle operation on a smooth, level road with no wind or calm winds, no precipitation, an ambient temperature of approximately 20 °C, and atmospheric pressure of

98.21 kPa. You may extrapolate road load force for speeds below 10 mph.

§ 1066.814 Vehicle preparation.

(a) Include additional fittings and adapters, as required, to accommodate a fuel drain at the lowest point possible in the tank(s) as installed on the vehicle.

(b) For preconditioning that involves loading an evaporative emission canister with butane, provide valving or other means as necessary to allow purging and loading of the canister.

(c) For vehicles to be tested for running loss emissions (40 CFR 86.134), prepare the fuel tank for measuring temperature and pressure as specified in 40 CFR 86.107–98(e) and (f) and 40 CFR 86.134. Vapor temperature measurement is optional during the running loss test.

(d) For vehicles to be tested for running loss emissions, prepare the exhaust system by sealing or plugging all detectable sources of exhaust gas leaks. Inspect or test the exhaust system to ensure that there are no leaks that would cause exhaust hydrocarbon emissions to be detected as running losses.

(e) The following provisions apply for preconditioning steps to reduce nonfuel emissions to normal vehicle background levels for vehicles subject to Tier 3 evaporative emission standards under 40 CFR 86.1813:

(1) You must notify us in advance if you plan to perform such preconditioning. This notice must include a detailed description of the intended procedures and any measurements or thresholds for determining when stabilization is complete. You need not repeat this notification for additional vehicle testing in the same or later model years as long as your preconditioning practice conforms to these procedures.

(2) You may precondition a vehicle as described in paragraph (e)(1) of this section only within 12 months after the vehicle's original date of manufacture, except that you may remove the spare tire for any testing.

§ 1066.820 Exhaust emission test procedures for FTP testing.

(a) *General.* The FTP exhaust emission test sequence consists of a cold-start test and a hot-start test as described in § 1066.801.

(b) *PM sampling options.* Collect PM using any of the procedures specified in paragraphs (b)(1) through (5) of this section and use the corresponding equation in § 1066.822 to calculate FTP composite emissions. Testing must meet the requirements related to filter face velocity as described in 40 CFR 1065.170(c)(1)(vi), except as specified in paragraphs (b)(4) and (5) of this section. For procedures involving flow weighting, set the filter face velocity to a weighting target of 1.0 to meet the requirements of 40 CFR 1065.170(c)(1)(vi). Allow filter face velocity to decrease as a percentage of the weighting factor if the weighting factor is less than 1.0. Use the appropriate equations in § 1066.620 to show that you meet the dilution factor requirements of § 1066.110(b)(2)(iii)(B).

(1) You may collect a separate PM sample for transient and stabilized portions of the cold-start UDDS and the hot-start UDDS. This may either be done by sampling with 3 bags or 4 bags. You may omit the stabilized portion of the hot-start test (bag 4) and use the stabilized portion of the cold-start test (bag 2) in its place.

(2) You may collect PM on one filter over the cold-start UDDS and on a separate filter over the hot-start UDDS.

(3) You may collect PM on one filter over the cold-start UDDS (bag 1 and bag 2) and on a separate filter over the 867 seconds of the stabilized portion of the cold-start UDDS and the first 505 seconds of the hot-start UDDS (bag 2 and bag 3). Note that this option involves duplicate measurements during the stabilized portion of the cold-start UDDS.

(4) You may collect PM on a single filter over the cold-start UDDS and the first 505 seconds of the hot-start UDDS. If you use this method, adjust your sampling system flow rate to weight the filter face velocity over the three intervals of the FTP based on weighting targets of 0.43 for bag 1, 1.0 for bag 2, and 0.57 for bag 3.

(5) You may collect PM on a single filter over the cold-start UDDS and the full hot-start UDDS. If you use this method, adjust your sampling system flow rate to weight the filter face velocity based on weighting targets of 0.75 for the cold-start UDDS and 1.0 for the hot-start UDDS.

(c) *Gaseous sampling options.* Collect gaseous samples using any of the following procedures:

(1) You may collect a single sample for a full UDDS (cold-start or hot-start).

(2) You may sample emissions separately for transient and stabilized portions of any UDDS.

(3) You may omit the stabilized portion of the hot-start test (bag 4) and use the stabilized portion of the cold-start test (bag 2) in its place.

(4) You may apply the provisions of paragraph (b) of this section for any gaseous batch measurement, consistent with good engineering judgment.

(d) *Test sequence.* Follow the exhaust emission measurement procedures specified in §§ 1066.410 through 1066.430, subject to the following exceptions and additional provisions:

(1) Take the following steps for the cold-start test:

(i) Precondition the vehicle as described in 40 CFR 86.132. Initiate the cold-start test following the 12 to 36 hour soak period.

(ii) Start sampling and recording simultaneously with starting the vehicle. Fifteen seconds after the engine starts, place the transmission in gear. Twenty seconds after the engine starts, begin the initial vehicle acceleration of the driving schedule.

(iii) At the end of the deceleration scheduled to occur 505 seconds into the cold-start UDDS, simultaneously switch all the sample flows from the cold-start transient interval to the stabilized interval, stopping all cold-start transient interval sampling and recording, including background sampling. Reset integrating devices for the stabilized interval and indicate the end of the cold-start interval in the recorded data. Operate the vehicle over the remainder of the UDDS. Turn the engine off 2 seconds after the end of the last deceleration in the stabilized interval (1,369 seconds after the start of the driving schedule).

(iv) Five seconds after the engine stops running, stop all stabilized interval sampling and recording, including background sampling. Stop any integrating devices for the stabilized interval and indicate the end of the stabilized interval in the recorded data. Note that the 5 second delay is intended to account for sampling system transport.

(2) Take the following steps for the hot-start test:

(i) Initiate the hot-start test (9 to 11) minutes after the end of the sample period for the cold-start UDDS.

(ii) Repeat the steps in paragraph (d)(1)(ii) of this section. Operate the vehicle over the first 505 seconds of the UDDS. At the end of the deceleration scheduled to occur 505 seconds into the hot-start UDDS, turn off the engine and simultaneously stop all hot-start sampling and recording, including background sampling, and any integrating devices.

(iii) For tests that do not include bag 4 operation, turn the engine off. To include bag 4 measurement, operate the vehicles over the remainder of the UDDS and conclude the testing as described in paragraphs (d)(1)(iii) and (iv) of this section.

(3) This completes the procedure for measuring FTP exhaust emissions. See 40 CFR part 86, subpart B, and

§ 1066.801 for continuing to evaporative or refueling tests.

§ 1066.822 Composite calculations for FTP exhaust emissions.

(a) Determine the mass of exhaust emissions of each pollutant for each FTP test interval as described in § 1066.610.

(b) Calculate the final composite gaseous test results as a mass-weighted value, $e_{[\text{emission}]\text{-FTPcomp}}$, in grams per mile using the following equation:

$$e_{[\text{emission}]\text{-FTPcomp}} = 0.43 \cdot \left(\frac{m_c}{D_{ct} + D_{cs}} \right) + 0.57 \cdot \left(\frac{m_h}{D_{ht} + D_{hs}} \right)$$

Eq. 1066.822-1

Where:

m_c = the combined mass emissions determined from the cold-start UDDS test interval (generally known as bag 1 and bag 2), in grams.

D_{ct} = the measured driving distance from the transient portion of the cold-start test (bag 1), in miles.

D_{cs} = the measured driving distance from the stabilized portion of the cold-start test (bag 2), in miles.

m_h = the combined mass emissions determined from the hot-start UDDS test interval in grams. This is the hot-stabilized portion from either the first or second UDDS (bag 2, unless you measure bag 4), in addition to the hot transient portion (bag 3).

D_{ht} = the measured driving distance from the transient portion of the hot-start test (bag 3), in miles.

D_{hs} = the measured driving distance from the stabilized portion of the hot-start test (bag 4), in miles. Set $D_{hs} = D_{cs}$ for testing where the hot-stabilized portion of the UDDS is not run.

(c) Calculate the final composite PM test results as a mass-weighted value, $e_{\text{PM-FTPcomp}}$, in grams per mile as follows:

(1) Use the following equation for PM measured as described in § 1066.820(b)(1), (2), or (3):

$$e_{\text{PM-FTPcomp}} = 0.43 \cdot \left(\frac{m_{\text{PM-cUDDS}}}{D_{ct} + D_{cs}} \right) + 0.57 \cdot \left(\frac{m_{\text{PM-hUDDS}}}{D_{ht} + D_{hs}} \right)$$

Eq. 1066.822-2

Where:

$m_{\text{PM-cUDDS}}$ = the combined PM mass emissions determined from the cold-start UDDS test interval (bag 1 and bag 2), in grams, as calculated using Eq. 1066.610–2.

$m_{\text{PM-hUDDS}}$ = the combined PM mass emissions determined from the hot-start UDDS test interval (bag 3 and bag 4), in grams, as calculated using Eq. 1066.610–2. This is the hot-stabilized portion from either the first or second UDDS (bag 2, unless you measure bag 4), in addition to the hot transient portion (bag 3).

(2) Use the following equation for PM measured as described in § 1066.820(b)(4):

$$e_{\text{PM-FTPcomp}} = \frac{m_{\text{PM}}}{(0.43 \cdot D_{ct}) + D_{cs} + (0.57 \cdot D_{ht})}$$

Eq. 1066.822-3

Where:

m_{PM} = the combined PM mass emissions determined from the cold-start UDDS test interval and the first 505 seconds of the hot-start UDDS test interval (bag 1, bag 2, and bag 3), in grams, as calculated using Eq. 1066.610–3.

(3) Use the following equation for PM measured as described in § 1066.820(b)(5):

$$e_{\text{PM-FTPcomp}} = \frac{m_{\text{PM}}}{0.43 \cdot (D_{ct} + D_{cs}) + 0.57 \cdot (D_{ht} + D_{hs})}$$

Eq. 1066.822-4

Where:

m_{PM} = the combined PM mass emissions determined from the cold-start UDDS test interval and the hot-start UDDS test interval (bag 1, bag 2, bag 3, and bag 4), in grams, as calculated using Eq. 1066.610–4.

§ 1066.830 Supplemental Federal Test Procedures; overview.

Sections 1066.831 and 1066.832 describe the detailed procedures for the

Supplemental Federal Test Procedure (SFTP). This testing applies for all vehicles subject to the SFTP standards in 40 CFR part 86, subpart S. The SFTP test procedure consists of FTP testing and two additional test elements—a sequence of vehicle operation with more aggressive driving and a sequence of vehicle operation that accounts for the impact of the vehicle's air conditioner.

(a) The SFTP standard applies as a composite representing the three test elements. The emission results from the aggressive driving test element (§ 1066.831), the air conditioning test element (§ 1066.832), and the FTP test element (§ 1066. 820) are analyzed according to the calculation methodology and compared to the applicable SFTP emission standards as described in 40 CFR part 86, subpart S.

(b) The test elements of the SFTP may be run in any sequence that includes the specified preconditioning steps.

§ 1066.831 Exhaust emission test procedures for aggressive driving.

(a) This section describes how to test using the US06 or LA–92 driving schedule. The US06 driving schedule can be divided into two test intervals—the US06 City cycle comprises the combined portions of the cycle from 1 to 130 seconds and from 495 to 596 seconds, and the US06 Highway cycle comprises the portion of the cycle between 130 and 495 seconds. See § 1066.801 for further information on the driving schedules.

(b) Take the following steps to precondition vehicles for testing under this section:

(1) Drain and refill the vehicle's fuel tank(s) in any of the following cases:

(i) For aggressive-driving tests that do not follow FTP or HFET testing.

(ii) For a test element that starts more than 72 hours after the most recent FTP or HFET measurement (with or without evaporative emission measurements).

(iii) For testing in which the test vehicle has not remained in an area where ambient temperatures were within the range specified for testing since the previous FTP or HFET.

(2) Keep ambient temperatures within the ranges specified for test measurements throughout the preconditioning sequence.

(3) Warm up the vehicle to a stabilized condition as follows:

(i) Push or drive the vehicle onto the dynamometer.

(ii) Operate the vehicle one time over one of the driving schedules specified in this paragraph (b)(3)(ii). You may ask us to use a particular preconditioning driving schedule if that is related to fuel effects on adaptive memory systems. For our testing, we will generally operate the vehicle over the same preconditioning cycle that will be used for testing in this section. You may exercise your sampling equipment, but you may not determine emissions results during preconditioning. Choose from the following driving schedules:

(A) The first 505 seconds of the UDDS (bag 1).

(B) The last 866 seconds of the UDDS (bag 2).

(C) The HFET driving schedule.

(D) US06 driving schedule or, for heavy-duty vehicles above 10,000 pounds GVWR, just the highway portion of the US06 driving schedule.

(E) The SC03 driving schedule.

(F) The LA–92 driving schedule.

(4) Allow the vehicle to idle for (1 to 2) minutes. This leads directly into the test measurements described in paragraph (c) of this section.

(c) For testing involving the full US06 driving schedule, you may collect emissions from separate city and highway test intervals (see 40 CFR part 600), or you may collect emissions over the full US06 driving schedule as a single test interval. Take the following steps for to measure emissions over separate city and highway test intervals:

(1) At 130 seconds, simultaneously stop all US06 City, and start all US06 Highway sampling, recording, and integrating (including background sampling). At 136 seconds (before the acceleration), record the measured dynamometer roll revolutions.

(2) At 495 seconds, simultaneously stop all US06 Highway, and start all US06 City sampling, recording, and integrating (including background sampling). At 500 seconds (before the acceleration), record the measured dynamometer roll revolutions.

(3) Except as specified in paragraph (c)(4) of this section, treat the emissions from the first and second portions of the US06 City test interval as a single sample.

(4) If you collect gaseous emissions over separate city and highway test intervals, you may still collect PM over the full US06 driving schedule as a single test interval. If you do this, calculate a composite dilution factor based on city and highway emissions using Eq. 1066.620–4 to show that you meet the dilution factor requirements of § 1066.110(b)(2)(iii)(B).

(d) For diesel-fueled vehicles, measure THC emissions on a continuous basis as described in 40 CFR part 1065. For separate measurement of the city and highway test intervals as described in paragraph (c) of this section, perform separate calculations for each portion of the test cycle.

(e) Follow the exhaust emission measurement procedures specified in §§ 1066.410 through 1066.430, subject to the following exceptions and additional provisions:

(1) Following the preconditioning specified in § 1066.830, place the vehicle in gear and simultaneously start sampling and recording. Begin the first acceleration 5 seconds after placing the vehicle in gear.

(2) Operate the vehicle over the full US06 driving schedule, except as follows:

(i) For heavy-duty vehicles above 10,000 pounds GVWR, operate the vehicle over the LA–92 driving schedule.

(ii) Heavy-duty vehicles at or below 10,000 pounds GVWR may be certified using only the highway portion of the US06 driving schedule. See 40 CFR 86.1816.

(3) Turn the engine off 2 seconds before the end of the driving schedule. Five seconds after the engine stops running, stop all sampling and recording, including background sampling. Stop any integrating devices and indicate the end of the test cycle in the recorded data.

(4) Correct calculated NO_X emissions as described in § 1066.630(a)(1).

§ 1066.832 Exhaust emission test procedure for SC03 emissions.

This section describes how to test using the SC03 driving schedule (see § 1066.801). This procedure is designed to determine gaseous exhaust emissions while simulating an urban trip on a hot summer day. The provisions of 40 CFR part 86 and 40 CFR part 600 waive SC03 testing for some vehicles; in those cases, calculate SFTP composite emissions by adjusting the weighting calculation as specified in 40 CFR part 86, subpart S.

(a) Keep the vehicle in an environment meeting the conditions described in paragraph (e) of this section throughout the preconditioning sequence.

(b) Warm up the vehicle to a stabilized condition as follows:

(1) Push or drive the test vehicle onto the dynamometer.

(2) Operate the test vehicle one time over the first 505 seconds of the UDDS (bag 1), the last 867 seconds of the UDDS (bag 2), or the SC03 driving schedule. If the air conditioning test sequence starts more than 2 hours after a different exhaust emission test, you may instead operate the vehicle one time over the full UDDS.

(3) Following the preconditioning drive, turn off the test vehicle and the vehicle cooling fan(s) and allow the vehicle to soak for (9 to 11) minutes.

(c) Follow the exhaust emission measurement procedures specified in §§ 1066.410 through 1066.430, subject to the following exceptions and additional provisions:

(1) Close the vehicle's windows before testing.

(2) The test cell and equipment must meet the specifications in paragraph (d) of this section. Measure and control ambient conditions as specified in paragraph (e) of this section.

(3) Set the vehicle's air conditioning controls by selecting A/C mode and ''maximum'', setting airflow to ''recirculate'' (if so equipped), selecting the highest fan setting, and turning the A/C temperature to full cool (or 72 °F for automatic systems). Turn the control to the ''on'' position before testing so the air conditioning system is active whenever the engine is running.

(4) Place the vehicle in gear 15 seconds after engine starting. Follow the SC03 driving schedule.

(5) Turn the engine off 2 seconds before the end of the driving schedule. Five seconds after the engine stops running, stop all sampling and recording, including background sampling. Stop any integrating devices any indicate the end of the test cycle in the recorded data. Note that the 5 second delay is intended to account for sampling system transport.

(6) Correct calculated NO_X emissions as described in § 1066.630(a)(2).

(d) The following requirement apply for the test cell and cooling fan configuration:

(1) *Minimum test cell size.* The test cell must be at least 20 feet wide, 40 feet long, and 10 feet high, unless we approve the use of a smaller test cell. We will approve this only if you demonstrate that the smaller test cell is capable of meeting all the requirements of this section.

(2) *Vehicle frontal air flow.* Verify that the fan configuration meets the requirements of § 1066.105(c)(3) before each test.

(e) Maintain ambient conditions as follows:

(1) *Ambient temperature.* Measure and record ambient temperature in the test cell at least once every 30 seconds during the sampling period. Control ambient temperature during emission sampling to 35.0 ±3.0 °C throughout the test and (33.6 to 36.4) °C on average.

(2) *Ambient humidity.* Measure and record ambient humidity in the test cell at least once every 30 seconds during the sampling period. Control ambient humidity during emission sampling as described in § 1066.425(d).

(3) *Conditions before and after testing.* Use good engineering judgment to demonstrate that you meet the specified instantaneous temperature and humidity tolerances in paragraphs (e)(1) and (2) of this section at all times before and between emission measurements.

(4) *Solar heat load.* Simulate solar heating as follows:

(i) You may use a metal halide lamp, a sodium lamp, or a quartz halogen lamp with dichroic mirrors as a radiant energy emitter. We may also approve the use of a different type of radiant energy emitter if you demonstrate that it meets the requirements of this section.

(ii) We recommend achieving radiant heating with spectral distribution characteristics as described in the following table:

TABLE 1 OF § 1066.832—RECOMMENDED SPECTRAL DISTRIBUTION

Band width (nm)	Percent of total spectrum	
	Lower limit (%)	Upper limit (%)
<320 [a]	.....	0
320–400	0	7
400–780	45	55
>780	35	53

[a] Note that you may need to filter the UV region between 280 and 320 nm.

(iii) Determine radiant energy intensity experienced by the vehicle as the average value between two measurements along the vehicle's centerline, one at the base of the windshield and the other at the bottom of the rear window (or equivalent location for vehicles without a rear window). This value must be 850 ±45 W/m ^{2}. Instruments for measuring radiant energy intensity must meet the following minimum specifications:

(A) Sensitivity of 9 microvolts per W/m^2.

(B) Response time of 5 seconds. For purposes of this requirement, ''response time'' means the time for the instrument to reach 95 percent of its equilibrium response after a step change in radiant intensity.

(C) Linearity of ±0.5%.

(D) Cosine response error of no more than ±1% for 0–70 degree zenith angles. The cosine response error is the percentage difference between the intensity measured at a given angle and the intensity predicted from the zero-degree intensity and the cosine of the incident angle.

(iv) Check the uniformity of radiant energy intensity at least every 500 hours of emitter usage or every 6 months, whichever is sooner, and after any major modifications affecting the solar simulation. Determine uniformity by measuring radiant energy intensity as described in paragraph (e)(4)(iii) of this section at each point of a 0.5 m grid over the vehicle's full footprint, including the edges of the footprint, at an elevation 1 m above the floor. Measured values of radiant energy intensity must be between (722 and 978) W/m^2 at all points.

§ 1066.835 AC17 air conditioning efficiency test procedure.

(a) *Overview.* This section describes a voluntary procedure for measuring the net impact of air conditioner operation on CO_2 emissions. See 40 CFR 86.1868 for provisions describing how to use these procedures to calculate credits and otherwise comply with emission standards.

(b) *Test cell.* Operate the vehicle in a test cell meeting the specifications described in § 86.832(d). You may add airflow up to at a maximum of 4 miles per hour during engine idling and when the engine is off if that is needed to meet ambient temperature or humidity requirements.

(c) *Ambient conditions.* Measure and control ambient conditions as specified in § 86.832(e), except that you must control ambient temperature during emission sampling to 25.0 ±3.0 °C throughout the test and (23.6 to 26.4) °C on average. Note that solar heating is disabled for certain test intervals as described in this section.

(d) *Interior air temperature measurement.* Measure and record the vehicle's interior air temperature at least once every 5 seconds during the sampling period. Measure temperature at the outlet of the center-most duct on the dashboard and approximately 30 mm behind the driver and passenger's headrests.

(e) *Air conditioning system settings.* For testing that requires the air conditioning to be operating, set the vehicle's air conditioning controls as follows:

(1) For automatic systems, set the temperature control to 72 °F.

(2) For manual systems, select A/C mode and ''maximum'', set airflow to ''recirculate'' (if so equipped), and select the highest fan setting. During the first idle period of the SC03 driving schedule (between 186 and 204 seconds), reduce the fan speed to nominally 50% of maximum fan speed, set airflow to ''fresh air'' (if so equipped), and adjust the temperature setting to target a temperature of 55 °F at the dashboard air outlet.

(f) *Test procedure.* Follow the exhaust emission measurement procedures specified in §§ 1066.410 through 1066.430, subject to the following exceptions and additional provisions:

(1) Prepare the vehicle for testing according to 40 CFR 86.132–00 (a) through (g).

(2) Open the vehicle's windows and operate the vehicle over a preconditioning UDDS with no solar heating and with the air conditioning off. At the end of the preconditioning drive, turn off the test vehicle and all cooling fans.

(3) Turn on solar heating within one minute after turning off the engine. Once the solar energy intensity reaches 805 W/m², let the vehicle soak for 30 ±1 minutes. You may alternatively rely on prior measurements to start the soak period after a defined period of warming up to the specified solar heat load. Close the vehicle's windows at the start of the soak period; ensure that the windows are adequately closed where instrumentation and wiring pass through to the interior.

(4) Turn the air conditioning control to the ''on'' position before testing so the air conditioning system is active whenever the engine is running. Follow the SC03 driving schedule. Place the vehicle in gear 15 seconds after engine starting. At the end of the driving schedule, simultaneously switch all the sampling, recording, and integrating from SC03 to HFET, including background sampling. Indicate the end of the test cycle in the recorded data. Record the measured dynamometer roll revolutions corresponding to the SC03 driving schedule.

(5) Directly following the SC03 driving schedule, operate the vehicle over the HFET driving schedule. Turn the vehicle off at the end of the driving schedule and simultaneously stop all sampling, recording, and integrating, including background sampling. Indicate the end of the test cycle in the recorded data. Record the measured dynamometer roll revolutions corresponding to the HFET drive schedule. Turn off the solar heating.

(6) Allow the vehicle to remain on the dynamometer for (10 to 15) minutes after emission sampling has concluded. Repeat the testing described in paragraphs (f)(1) through (5) of this section, but leave the vehicle's windows open and turn off the vehicle's air conditioner and the solar heating throughout the test run.

(g) *Calculations.* (1) Determine the mass of CO_2 emissions for each of the two test intervals as described in § 1066.610.

(2) Calculate the composite mass-weighted emissions of CO_2, $e_{[CO2]\text{-}AC17comp}$, representing the average of the SC03 and HFET emissions, in grams per mile using the following equation:

$$e_{\text{CO2-AC17comp}} = 0.5 \cdot \left(\frac{m_{\text{SC03}}}{D_{\text{SC03}}} \right) + 0.5 \cdot \left(\frac{m_{\text{HFET}}}{D_{\text{HFET}}} \right)$$

Eq. 1066.835-1

Where:

m_{SC03} = mass emissions from the SC03 test interval, in grams.

m_{HFET} = mass emissions from the HFET test interval, in grams.

D_{SC03} = measured driving distance during the SC03 test interval, in miles.

D_{HFET} = measured driving distance during the HFET test interval, in miles.

(h) *Recordkeeping.* In addition to the information specified in § 1066.695, you must record the following information for each vehicle tested: interior volume, climate control system type and characteristics, refrigerant used, compressor type, and evaporator/condenser characteristics.

§ 1066.839 Highway fuel economy test procedure.

This section describes the procedure for the highway fuel economy test (HFET). This test involves emission sampling and fuel economy measurement for certain vehicles as described in 40 CFR part 86, subpart S, and in 40 CFR part 600. See § 1066.801 for further information on the driving schedules. Follow the exhaust emission measurement procedures specified in §§ 1066.410 through 1066.430, subject to the following exceptions and additional provisions:

(a) Perform the HFET immediately following the FTP when this is practical. If the HFET procedure starts more than 3 hours after an FTP (including evaporative emission measurements, if applicable), operate it over one UDDS to precondition the vehicle. We may approve additional preconditioning in unusual circumstances.

(b) Operate the vehicle over the HFET driving schedule for preconditioning. Allow the vehicle to idle for 15 seconds (with the vehicle in gear), then start a repeat run of the HFET driving schedule and simultaneously start sampling and recording.

(c) Turn the engine off at the end of the HFET driving schedule and stop all sampling and recording, including background. Stop any integrating devices and indicate the end of the test cycle in the recorded data.

§ 1066.840 Fuel storage system leak test procedure.

(a) *Scope.* Perform this test as required in the standard-setting part to verify that there are no significant leaks in your fuel storage system.

(b) *Measurement principles.* Leaks are detected by measuring pressure, temperature, and flow to calculate an equivalent orifice diameter for the system. Use good engineering judgment to develop and implement leak test equipment. Your leak test equipment must meet the following requirements:

(1) Pressure, temperature, and flow sensors must be calibrated with NIST-traceable standards.

(2) Correct flow measurements to standard reference conditions.

(3) Leak test equipment must have the ability to pressurize fuel storage systems to at least 4.1 kPa and have an internal leak rate of less than 0.20 standard liters per minute.

(4) You must be able to attach the test equipment to the vehicle without permanent alteration of the fuel storage or evaporative emission control systems.

(5) The point of attachment to the fuel storage system must allow pressurization to test system integrity of the fuel tank and of fuel lines and vapor lines reaching up to and including the gas cap and the evaporative canister. The evaporative system test port available on some vehicles is an example of an effective attachment point.

(c) *Leak test procedure.* Test a vehicle's fuel storage system for leaks as follows:

(1) Refuel vehicle to 40% of its nominal fuel tank capacity.

(2) Soak the vehicle for 6 to 24 hours at a temperature between (20 and 30) °C; record this setpoint temperature and maintain temperatures throughout the leak test at this setpoint temperature within a tolerance ± 2 °C.

(3) Before performing the test, purge the fuel storage system of any residual pressure, bringing the system into equilibrium with ambient pressure.

(4) Seal the evaporative canister's vent to atmosphere and ensure that the vehicle's purge valve is closed.

(5) Attach the leak test equipment to the vehicle.

(6) Pressurize the fuel storage system with N_2 or another inert gas to at least 2.4 kPa. Use good engineering judgment to avoid overpressurizing the system.

(7) Maintain gas flow through the system for at least 180 seconds, ensuring that the flow reading is stable for an effective leak diameter of ± 0.002 inches.

(8) Use the following equation, or a different equation you develop based on good engineering judgment, to calculate the effective leak diameter, D_{eff}:

$$D_{eff} = 7.844 \cdot \left(\frac{V_{gas}}{\sqrt{\frac{(p_1 - p_2) \cdot (p_1 + p_2)}{G \cdot T}}} \right)^{0.5057}$$

Where:
D_{eff} = effective leak diameter, in inches.
V_{gas} = volumetric flow of gas, in m^3/s.
p_1 = inlet pressure to orifice, in kPa.
p_2 = atmospheric pressure, in kPa.
G = specific gravity of N_2 at atmospheric pressure and 15.5 °C
T = temperature of flowing medium, in K.

(9) You may perform any number of replicate tests, but all the tests for a vehicle must use the same attachment point. The average value of replicate tests is the official result for a given vehicle.

(10) You may use special or alternative test procedures as described in 40 CFR 1065.10(c).

(d) *Equipment calibration.* Use good engineering judgment to calibrate the leak check device.

Subpart J—[Reserved]

Subpart K—Definitions and Other Reference Material

§ 1066.1001 Definitions.

The definitions in this section apply to this part. The definitions apply to all subparts unless we note otherwise. Other terms have the meaning given in 40 CFR part 1065. The definitions follow:

Bag 1 means relating to the first 505 s of the FTP cold-start test interval. Note that the term bag 1 may also apply to measurement of constituents that are not collected in a bag, such as PM and continuously measured THC.

Bag 2 means relating to the last 867 s of the FTP cold-start test interval.

Bag 3 means relating to the first 505 s of the FTP hot-start test interval.

Bag 4 means relating to the last 867 s of the FTP hot-start test interval, if run. Note that bag 2 is generally used in place of bag 4.

Base inertia means a value expressed in mass units to represent the rotational inertia of the rotating dynamometer components between the vehicle driving tires and the dynamometer torque-measuring device, as specified in § 1066.250.

C_1-equivalent means a convention of expressing HC concentrations based on the total number of carbon atoms present, such that the C_1-equivalent of an HC concentration equals the concentration multiplied by the mean number of carbon atoms in each HC molecule. For example, the C_1-equivalent of 10 ppm of propane (C_3H_8) is 30 ppm. C_1-equivalent concentration values may be denoted as ''ppmC'' in the standard-setting part. Densities may also be expressed on a C_1 basis. Note that calculating HC masses from concentrations and densities is only valid where they are each expressed on the same carbon basis.

Driving schedule means a series of vehicle speeds that a vehicle must follow during a test. Driving schedules are specified in the standard-setting part. A driving schedule may consist of multiple test intervals.

Duty cycle means a set of weighting factors and the corresponding test cycles, where the weighting factors are used to combine the results of multiple test intervals into a composite result.

FTP means one of the following:

(1) The test cycle consisting of one UDDS as specified in paragraph (a) of Appendix I of 40 CFR part 86, followed by a 10-minute soak with the engine off and repeat driving through the first 505 seconds of the UDDS. See § 1066.801(c)(1).

(2) The entire test procedure for measuring exhaust and/or evaporative emissions as described in § 1066.801(c).

Footprint has the meaning given in the standard-setting part.

HFET means the test cycle specified in Appendix I of 40 CFR part 600.

LA–92 means the test cycle specified in Appendix I, paragraph (c), of 40 CFR part 86.

Nonmethane organic gas (NMOG) means the combination of organic gases other than methane as calculated in § 1066.665. Note that for this part, the organic gases are summed on a mass basis without any adjustment for photochemical reactivity.

Parts-per-million (ppm) means ppm on a molar basis. For hydrocarbon concentrations including HC, THC, NMHC, and NMOG, ppm means ppm on a C_1-equivalent molar basis.

Road-load coefficients means sets of A, B, and C road-load force coefficients that are used in the dynamometer road-load simulation, where road-load force at speed v equals $A + B \cdot v + C \cdot v^2$.

SC03 means the test cycle specified in Appendix I, paragraph (h), of 40 CFR part 86.

SFTP means the collection of test cycles as given in 1066.801(c)(2).

Standard reference conditions means the following:

(1) Pressure at 101.325 kPa.

(2) Temperature at 293.15 K.

Test interval means a period over which a vehicle's emission rates are determined separately. For many standards, compliance with the standard is based on a weighted average of the mass emissions from multiple test intervals. For example, the standard-setting part may specify a complete duty cycle as a cold-start test interval and a hot-start test interval. In cases where multiple test intervals occur over a duty cycle, the standard-setting part may specify additional calculations that weight and combine results to arrive at composite values for comparison against the applicable standards.

Test weight has the meaning given in § 1066.810.

UDDS means the test cycle specified in Appendix I, paragraph (a), of 40 CFR part 86.

US06 means the test cycle specified in Appendix I, paragraph (g), of 40 CFR part 86.

Unloaded coastdown means a dynamometer coastdown run with the

vehicle wheels removed from the roll surface.

We (us, our) means the Administrator of the Environmental Protection Agency and any authorized representatives.

§ 1066.1005 Symbols, abbreviations, acronyms, and units of measure.

The procedures in this part generally follow either the International System of Units (SI) or the United States customary units, as detailed in NIST Special Publication 811, which we incorporate by reference in § 1066.1010. See 40 CFR 1065.20 for specific provisions related to these conventions. This section summarizes the way we use symbols, units of measure, and other abbreviations.

(a) *Symbols for quantities.* This part uses the following symbols and units of measure for various quantities:

Symbol	Quantity	Unit	Unit symbol	Unit in terms of SI base units
α	atomic hydrogen to carbon ratio	mole per mole	mol/mol	1
a	acceleration	feet per second squared or meters per second squared.	ft/s^2 or m/s^2	m·s^{-2}
β	atomic oxygen to carbon ratio	mole per mole	mol/mol	1
c	conversion factor			
C_d	discharge coefficient			
d	diameter	meters	m	m
DF	dilution factor			1
e	mass weighted emission result	grams/mile	g/mi	
F	force	pound force or newton	lbf or N	kg·s^{-2}
f	frequency	hertz	Hz	s^{-1}
I	inertia	pound mass or kilogram	lbm or kg	kg
I	current	ampere	A	A
i	indexing variable			
m	mass	pound mass or kilogram	lbm or kg	kg
N	total number in series			
n	total number of pulses in a series			
ρ	mass density	kilogram per cubic meter	kg/m^3	kg·m^{-3}
R	dynamometer roll revolutions	revolutions per minute	rpm	2·π·60^{-1}
$Re^{\#}$	Reynolds number			
Q	flow	cubic feet or cubic meter		
$\dot{Q}$	flow rate	cubic feet per minute or cubic meter per second.		
p	pressure	pascal	Pa	m^{-1}·kg·s^{-2}
T	Celsius temperature	degree Celsius	°C	K − 273.15
T	torque (moment of force)	newton meter	N·m	m^2·kg·s^{-2}
t	time	second	s	s
Δt	time interval, period, 1/frequency	second	s	s
U	voltage	volt	V	m^2·kg·s^{-3}·A^{-1}
v	speed	miles per hour or meters per second	mph or m/s	m·s^{-1}
VP	volume percent			
x	mass of emission over a test interval	kilogram	kg	kg
y	generic variable			

(b) *Symbols for chemical species.* This part uses the following symbols for chemical species and exhaust constituents:

Symbol	Species
CH_4	methane.
CO	carbon monoxide.
CO_2	carbon dioxide.
NMHC	nonmethane hydrocarbon.
NMHCE	nonmethane hydrocarbon equivalent.
NMOG	nonmethane organic gas.
NO	nitric oxide.
NO_2	nitrogen dioxide.
NO_X	oxides of nitrogen.
N_2O	nitrous oxide.
O_2	molecular oxygen.
OHC	oxygenated hydrocarbon.
PM	particulate matter.
THC	total hydrocarbon.
THCE	total hydrocarbon equivalent.

(c) *Superscripts.* This part uses the following superscripts to define a quantity:

Superscript	Quantity
overbar (such as $\bar{y}$).	arithmetic mean.

(d) *Subscripts.* This part uses the following subscripts to define a quantity:

Subscript	Quantity
abs	absolute quantity.
act	actual or measured condition.
actint	actual or measured condition over the speed interval.
atmos	atmospheric.
b	base.
c	coastdown.
comp	composite.
cor	corrected.
dexh	dilute exhaust quantity.
dil	dilute.
e	effective.
emission	emission specie.
error	error.
exh	raw exhaust quantity.
exp	expected quantity.
fil	filter.
final	final.
flow	flow measurement device type.
i	an individual of a series.
int	intake.
init	initial quantity, typically before an emission test.
max	the maximum (i.e. peak) value expected at the standard over a test interval; not the maximum of an instrument range.
meas	measured quantity.
ref	reference quantity.
rev	revolution.
roll	dynamometer roll.
s	settling.
sat	saturated condition.
span	span quantity.
std	standard conditions.
test	test quantity.
uncor	uncorrected quantity.
w	weighted.

Subscript	Quantity
zero	zero quantity.

(e) *Other acronyms and abbreviations.* This part uses the following additional abbreviations and acronyms:

A/C	air conditioning.
ALVW	adjusted loaded vehicle weight.
CFR	Code of Federal Regulations.
CFV	critical-flow venturi.
CVS	constant-volume sampler.
EPA	Environmental Protection Agency.
ETW	equivalent test weight.
EV	electric vehicle.
FID	flame-ionization detector.
FTP	Federal test procedure.
GC	gas chromatograph.
GHG	greenhouse gas (including CO_2, N_2O, and CH_4).
GVWR	gross vehicle weight rating.
HEV	hybrid electric vehicle.
HFET	highway fuel economy test.
HLDT	heavy light-duty truck.
HPLC	high pressure liquid chromatography.
IBR	incorporated by reference.
MDPV	medium-duty passenger vehicle.
NIST	National Institute for Standards and Technology.
PDP	positive-displacement pump.
PHEV	plug-in hybrid electric vehicle.
PM	particulate matter.
RESS	rechargeable energy storage system.
SAE	Society of Automotive Engineers.
SC03	air conditioning driving schedule.
SEA	selective enforcement audit.
SFTP	supplemental federal test procedure.
SSV	subsonic venturi.
UDDS	urban dynamometer driving cycle.
US06	aggressive driving schedule.
U.S.C.	United States Code.

(f) This part uses the following densities of chemical species:

Symbol	Quantity[1 2]	g/m³	g/ft³
ρ_{CH4}	density of methane	666.905	18.8847
ρ_{CH3OH}	density of methanol	1332.02	37.7185
ρ_{C2H5OH}	C_1-equivalent density of ethanol	957.559	27.1151
ρ_{C2H4O}	C_1-equivalent density of acetaldehyde	915.658	25.9285
ρ_{C3H8}	density of propane	611.035	17.3026
ρ_{C3H7OH}	C_1-equivalent density of propanol	832.74	23.5806
ρ_{CO}	density of carbon monoxide	1164.41	32.9725
ρ_{CO2}	density of carbon dioxide	1829.53	51.8064
$\rho_{HC\text{-}gas}$	effective density of hydrocarbon—gaseous fuel[3]	(see 3)	(see 3)
ρ_{HCHO}	density of formaldehyde	1248.21	35.3455
$\rho_{HC\text{-}liq}$	effective density of hydrocarbon—liquid fuel[4]	576.816	16.3336
$\rho_{NMHC\text{-}gas}$	effective density of nonmethane hydrocarbon—gaseous fuel[3]	(see 3)	(see 3)
$\rho_{NMHC\text{-}liq}$	effective density of nonmethane hydrocarbon—liquid fuel[4]	576.816	16.3336
$\rho_{NMHCE\text{-}gas}$	effective density of nonmethane equivalent hydrocarbon—gaseous fuel[3]	(see 3)	(see 3)
$\rho_{NMHCE\text{-}liq}$	effective density of nonmethane equivalent hydrocarbon—liquid fuel[4]	576.816	16.3336
ρ_{NOx}	effective density of oxides of nitrogen[5]	1912.5	54.156
ρ_{N2O}	density of nitrous oxide	1829.66	51.8103

[1] Densities are given at 20 °C and 101.325 kPa.
[2] Densities for all hydrocarbon containing quantities are given in kg/m³-carbon atom and g/ft³-carbon atom.
[3] The effective density for natural gas fuel and liquefied petroleum gas fuel are defined by an atomic hydrogen-to-carbon ratio, α, of the hydrocarbon components of the test fuel. $\rho_{HCgas} = 0.04157 \cdot (12.011 + (\alpha \cdot 1.008))$.
[4] The effective density for gasoline and diesel fuel are defined by an atomic hydrogen-to-carbon ratio, α, of 1.85.
[5] The effective density of NO_X is defined by the molar mass of nitrogen dioxide, NO_2.

(g) *Constants.* (1) This part uses the following constants for the composition of dry air:

Symbol	Quantity	mol/mol
x_{Arair}	amount of argon in dry air	0.00934
x_{CO2air}	amount of carbon dioxide in dry air	0.000375
x_{N2air}	amount of nitrogen in dry air	0.78084
x_{O2air}	amount of oxygen in dry air	0.209445

(2) This part uses the following molar masses or effective molar masses of chemical species:

Symbol	Quantity	g/mol ($10^{-3} \cdot kg \cdot mol^{-1}$)
M_{air}	molar mass of dry air[1]	28.96559
M_{H2O}	molar mass of water	18.01528

[1] See paragraph (g)(1) of this section for the composition of dry air.

(h) *Prefixes.* This part uses the following prefixes to define a quantity:

Symbol	Quantity	Value
μ	micro	10^{-6}
m	milli	10^{-3}
c	centi	10^{-2}
k	kilo	10^{3}
M	mega	10^{6}

§ 1066.1010 Reference materials.

(a) Certain material is incorporated by reference into this part with the approval of the Director of the Federal Register under 5 U.S.C. 552(a) and 1 CFR part 51. To enforce any edition other than that specified in this section, the Environmental Protection Agency must publish a notice of the change in the **Federal Register** and the material must be available to the public. All approved material is available for inspection at U.S. EPA, Air and Radiation Docket and Information Center, 1301 Constitution Ave. NW., Room B102, EPA West Building, Washington, DC 20460, (202) 202–1744, and is available from the sources listed below. It is also available for inspection at the National Archives and Records Administration (NARA). For information on the availability of this material at NARA, call 202–741–6030, or go to *http://www.archives.gov/federal_register/code_of_federal_regulations/ibr_locations.html.*

(b) Society of Automotive Engineers, 400 Commonwealth Dr., Warrendale, PA 15096–0001, (877) 606–7323 (U.S. and Canada) or (724) 776–4970 (outside the U.S. and Canada), *http://www.sae.org.*

(1) SAE J1263, Road Load Measurement and Dynamometer Simulation Using Coastdown Techniques, Revised March 2010, IBR approved for §§ 1066.301(b) and 1066.310(b).

(2) SAE J1634, Electric Vehicle Energy Consumption and Range Test Procedure, Revised October 2012, IBR approved for § 1066.501.

(3) SAE J1711, Recommended Practice for Measuring the Exhaust Emissions and Fuel Economy of Hybrid-Electric Vehicles, Including Plug-In Hybrid Vehicles, Revised June 2010, IBR approved for §§ 1066.122 and 1066.501.

(4) SAE J2263, Road Load Measurement Using Onboard Anemometry and Coastdown Techniques, Revised December 2008, IBR approved for §§ 1066.301(b) and 1066.310(b).

(5) SAE J2264, Chassis Dynamometer Simulation of Road Load Using Coastdown Techniques, Issued April 1995, IBR approved for § 1066.320.

(6) SAE J2711, Recommended Practice for Measuring Fuel Economy and Emissions of Hybrid-Electric and Conventional Heavy-Duty Vehicles, Issued September 2002, IBR approved for § 1066.501.

(7) SAE J2951, Drive Quality Evaluation for Chassis Dynamometer Testing, Revised November 2011, IBR approved for § 1066.430.

(c) National Institute of Standards and Technology, 100 Bureau Drive, Stop 1070, Gaithersburg, MD 20899–1070, (301) 975–6478, *www.nist.gov*, or *inquiries@nist.gov.*

(1) NIST Special Publication 811, 2008 Edition, Guide for the Use of the International System of Units (SI), March 2008, IBR approved for §§ 1066.20(a) and 1066.1005.

(2) [Reserved]

[FR Doc. 2013–08500 Filed 5–20–13; 8:45 a.m.]

BILLING CODE P