AUTHENTICATED
U.S. GOVERNMENT
INFORMATION
GPO

FEDERAL REGISTER

Vol. 79 Monday,
No. 125 June 30, 2014

Pages 36629–37154

OFFICE OF THE FEDERAL REGISTER

The **FEDERAL REGISTER** (ISSN 0097–6326) is published daily, Monday through Friday, except official holidays, by the Office of the Federal Register, National Archives and Records Administration, Washington, DC 20408, under the Federal Register Act (44 U.S.C. Ch. 15) and the regulations of the Administrative Committee of the Federal Register (1 CFR Ch. I). The Superintendent of Documents, U.S. Government Printing Office, Washington, DC 20402 is the exclusive distributor of the official edition. Periodicals postage is paid at Washington, DC.

The **FEDERAL REGISTER** provides a uniform system for making available to the public regulations and legal notices issued by Federal agencies. These include Presidential proclamations and Executive Orders, Federal agency documents having general applicability and legal effect, documents required to be published by act of Congress, and other Federal agency documents of public interest.

Documents are on file for public inspection in the Office of the Federal Register the day before they are published, unless the issuing agency requests earlier filing. For a list of documents currently on file for public inspection, see *www.ofr.gov.*

The seal of the National Archives and Records Administration authenticates the Federal Register as the official serial publication established under the Federal Register Act. Under 44 U.S.C. 1507, the contents of the **Federal Register** shall be judicially noticed.

The **Federal Register** is published in paper and on 24x microfiche. It is also available online at no charge at *www.fdsys.gov*, a service of the U.S. Government Printing Office.

The online edition of the **Federal Register** is issued under the authority of the Administrative Committee of the Federal Register as the official legal equivalent of the paper and microfiche editions (44 U.S.C. 4101 and 1 CFR 5.10). It is updated by 6:00 a.m. each day the **Federal Register** is published and includes both text and graphics from Volume 59, 1 (January 2, 1994) forward. For more information, contact the GPO Customer Contact Center, U.S. Government Printing Office. Phone 202-512-1800 or 866-512-1800 (toll free). E-mail, *gpocusthelp.com.*

The annual subscription price for the **Federal Register** paper edition is $749 plus postage, or $808, plus postage, for a combined **Federal Register, Federal Register** Index and List of CFR Sections Affected (LSA) subscription; the microfiche edition of the **Federal Register** including the **Federal Register** Index and LSA is $165, plus postage. Six month subscriptions are available for one-half the annual rate. The prevailing postal rates will be applied to orders according to the delivery method requested. The price of a single copy of the daily **Federal Register,** including postage, is based on the number of pages: $11 for an issue containing less than 200 pages; $22 for an issue containing 200 to 400 pages; and $33 for an issue containing more than 400 pages. Single issues of the microfiche edition may be purchased for $3 per copy, including postage. Remit check or money order, made payable to the Superintendent of Documents, or charge to your GPO Deposit Account, VISA, MasterCard, American Express, or Discover. Mail to: U.S. Government Printing Office—New Orders, P.O. Box 979050, St. Louis, MO 63197-9000; or call toll free 1-866-512-1800, DC area 202-512-1800; or go to the U.S. Government Online Bookstore site, see *bookstore.gpo.gov.*

There are no restrictions on the republication of material appearing in the **Federal Register.**

How To Cite This Publication: Use the volume number and the page number. Example: 77 FR 12345.

Postmaster: Send address changes to the Superintendent of Documents, Federal Register, U.S. Government Printing Office, Washington, DC 20402, along with the entire mailing label from the last issue received.

SUBSCRIPTIONS AND COPIES

PUBLIC

Subscriptions:

Paper or fiche	**202–512–1800**
Assistance with public subscriptions	**202–512–1806**

General online information **202–512–1530; 1–888–293–6498**

Single copies/back copies:

Paper or fiche	**202–512–1800**
Assistance with public single copies	**1–866–512–1800 (Toll-Free)**

FEDERAL AGENCIES

Subscriptions:

Assistance with Federal agency subscriptions:

Email	*FRSubscriptions@nara.gov*
Phone	**202–741–6000**

Printed on recycled paper.

Contents

Federal Register

Vol. 79, No. 125

Monday, June 30, 2014

Advisory Council on Historic Preservation
See Historic Preservation, Advisory Council

Alcohol and Tobacco Tax and Trade Bureau
PROPOSED RULES
Establishment of the Fountaingrove District Viticultural Area, 36683–36689

Antitrust Division
NOTICES
Changes under National Cooperative Research and Production Act:
3D PDF Consortium, Inc., 36821–36822

Antitrust
See Antitrust Division

Army Department
NOTICES
Changes to the Military Freight Carrier Registration Program, 36788
Meetings:
Board of Visitors, United States Military Academy, 36788–36789

Bonneville Power Administration
NOTICES
Proposed Adjustments:
Interchange Energy Imbalances Rate Under the Pacific Northwest Coordination Agreement, 36794–36796

Bureau of Safety and Environmental Enforcement
NOTICES
Agency Information Collection Activities; Proposals, Submissions, and Approvals:
Oil and Gas and Sulphur Operations in the OCS – General, 36811–36817

Children and Families Administration
NOTICES
Agency Information Collection Activities; Proposals, Submissions, and Approvals:
State Plan for Grants to States for Refugee Resettlement, 36808–36809

Coast Guard
RULES
Safety Zones:
Oakmont Yacht Club Fireworks; Allegheny River Mile 11.75 to 12.25; Pittsburgh, PA, 36655

Commerce Department
See International Trade Administration
See National Institute of Standards and Technology
See National Oceanic and Atmospheric Administration
See Patent and Trademark Office

Comptroller of the Currency
NOTICES
Meetings:
Mutual Savings Association Advisory Committee, 36873–36874

Defense Department
See Army Department
NOTICES
Agency Information Collection Activities; Proposals, Submissions, and Approvals, 36786–36787
Re-establishment of Department of Defense Federal Advisory Committees, 36787–36788

Education Department
NOTICES
Agency Information Collection Activities; Proposals, Submissions, and Approvals:
National Assessment of Education Progress Main 2015 Wave 2, 36789–36790

Employment and Training Administration
NOTICES
Revised Methodology for Selecting Job Corps Centers for Closure, 36823–36827
Worker Adjustment Assistance; Determinations, 36827–36829
Worker Adjustment Assistance; Investigations, 36830
Worker and Alternative Trade Adjustment Assistance; Determinations, 36830–36831

Energy Department
See Bonneville Power Administration
See Federal Energy Regulatory Commission
NOTICES
Applications to Export Electric Energy:
Exelon Generation Company, LLC, 36790–36791
Meetings:
Advanced Scientific Computing Advisory Committee, 36791
Commission to Review the Effectiveness of the National Energy Laboratories, 36792–36793
Quadrennial Energy Review, 36791–36792
Wind-Energy Bat and Eagle Impact Minimization Technologies and Field Testing Opportunities, 36793–36794

Environmental Protection Agency
RULES
Air Quality State Implementation Plans; Approvals and Promulgations:
North Carolina, 36655–36657
Emissions and Fuel Standards:
Control of Air Pollution from Motor Vehicles, 36657–36658
National Oil and Hazardous Substances Pollution Contingency Plan:
National Priorities List; Partial Deletion of the Naval Industrial Reserve Ordnance Plant Superfund Site, 36658–36662
PROPOSED RULES
Air Quality Implementation Plans; Approvals and Promulgations:
Wisconsin; Prevention of Significant Deterioration Program, 36689–36692

Air Quality State Implementation Plans; Approvals and Promulgations:
Indiana; Redesignation of Lake and Porter Counties to Attainment of the 2008 Eight-Hour Ozone Standard, 36692–36696
National Oil and Hazardous Substances Pollution Contingency Plan:
National Priorities List; Partial Deletion of the Naval Industrial Reserve Ordnance Plant Superfund Site, 36696–36698
Petroleum Refinery Sector Risk and Technology Review and New Source Performance Standards, 36880–37075
NOTICES
Integrated Review Plans:
Primary National Ambient Air Quality Standards for Oxides of Nitrogen, 36801–36802

Equal Employment Opportunity Commission
NOTICES
Agency Information Collection Activities; Proposals, Submissions, and Approvals, 36802

Federal Aviation Administration
RULES
Airworthiness Directives:
Airbus Helicopters (Previously Eurocopter France) Helicopters, 36638–36640
Airbus Helicopters Deutschland GmbH (Airbus Helicopters) (Previously Eurocopter Deutschland GmbH) Helicopters, 36635–36638
Columbia Helicopters, Inc. Helicopters; Type Certificate Previously Held By Boeing Defense and Space Group, 36629–36631
Dassault Aviation Airplanes, 36631–36634
Turbomeca S.A. Turboshaft Engines, 36634–36635
PROPOSED RULES
Airworthiness Directives:
Airbus Airplanes, 36666–36669
Beechcraft Corporation (Type Certificate Previously Held by Hawker Beechcraft Corporation; Raytheon Aircraft Company; Beech Aircraft Corporation) Airplanes, 36675–36678
The Boeing Company Airplanes, 36669–36675, 36678–36683
NOTICES
Petitions for Exemption; Summaries, 36859–36860
Requests to Release Deed Restrictions:
Yellowstone Airport, West Yellowstone, MT, 36860

Federal Communications Commission
NOTICES
Agency Information Collection Activities; Proposals, Submissions, and Approvals, 36802–36805
Long-Term Evolution Measurements:
Interference Into Digital Television Receivers, 36806–36807

Federal Energy Regulatory Commission
NOTICES
Applications:
National Fuel Gas Supply Corporation, 36796–36797
Combined Filings, 36797–36800
Complaints:
Indianapolis Power and Light Company v. Midcontinent Independent System Operator, Inc., 36798–36799
Exemptions Transfer:
Hoosier Hydroelectric, Inc. Rocky River Hydro, LLC, 36799
Richard Kaster BC Hydro, LLC, 36799
Filings:
North American Electric Reliability Corporation, 36800–36801
Meetings:
Warm Springs Irrigation District, 36801

Federal Maritime Commission
NOTICES
Complaints:
Santa Fe Discount Cruise Parking, Inc., et al. v. Board of Trustees of the Galveston Wharves, et al., 36807

Federal Railroad Administration
NOTICES
Agency Information Collection Activities; Proposals, Submissions, and Approvals, 36860–36861
Petitions for Waivers of Compliance, 36861–36862
Railroad Safety Program and Product Safety Plans; Applications for Approval, 36862–36863

Fish and Wildlife Service
RULES
Endangered and Threatened Wildlife and Plants:
Wood Stork; Reclassification of Breeding Population from Endangered to Threatened, 37078–37103
PROPOSED RULES
Endangered and Threatened Wildlife and Plants:
6-Month Extension of Final Determination on Status for the Northern Long-Eared Bat, 36698–36699

Foreign Assets Control Office
RULES
Burmese Sanctions Regulations, 37106–37121

Health and Human Services Department
See Children and Families Administration
NOTICES
Agency Information Collection Activities; Proposals, Submissions, and Approvals:
Cost Study of Evidence-Based Teen Pregnancy Prevention Programs, 36807–36808

Historic Preservation, Advisory Council
NOTICES
Meetings:
Advisory Council on Historic Preservation, 36809

Homeland Security Department
See Coast Guard

Housing and Urban Development Department
NOTICES
Agency Information Collection Activities; Proposals, Submissions, and Approvals:
Logic Model Grant Performance Reporting Standard Form, 36810–36811
Manufactured Home Construction and Safety Standards Act Reporting Requirements, 36809–36810

Interior Department
See Bureau of Safety and Environmental Enforcement
See Fish and Wildlife Service
See Land Management Bureau
See National Park Service

Internal Revenue Service
RULES
Tax Credit for Employee Health Insurance Expenses of Small Employers, 36640–36654
NOTICES
Agency Information Collection Activities; Proposals, Submissions, and Approvals, 36874–36876
Agency Information Collection Activities; Proposals, Submissions, and Approvals:
Distributions from Pensions, Annuities, Retirement or Profit-Sharing Plans, IRAs, Insurance Contracts, etc., 36876

International Trade Administration
NOTICES
Antidumping Duty Administrative Reviews; Results, Extensions, Amendments, etc.:
Certain Preserved Mushrooms from India, 36720–36721
Fresh Garlic from the People's Republic of China, 36721–36725
Seamless Refined Copper Pipe and Tube from Mexico, 36719–36720

Justice Department
See Antitrust Division
NOTICES
Agency Information Collection Activities; Proposals, Submissions, and Approvals, 36819–36821
Proposed Consent Decrees under the Clean Water Act, 36821

Labor Department
See Employment and Training Administration
See Occupational Safety and Health Administration
NOTICES
Agency Information Collection Activities; Proposals, Submissions, and Approvals:
Escape and Evacuation Plans, 36822–36823

Land Management Bureau
RULES
Required Fees for Mining Claims or Sites, 36662–36665
NOTICES
Alaska Native Claims Selections, 36817–36818

Maritime Administration
NOTICES
Requests for Administrative Waivers of the Coastwise Trade Laws:
Vessel ALTHEA, 36864
Vessel CHRISTI ANNE, 36864–36865
Vessel ESSANZA, 36863
Vessel MIAMI OCEAN RAFTING, 36863–36864

National Aeronautics and Space Administration
NOTICES
Agency Information Collection Activities; Proposals, Submissions, and Approvals, 36836–36837

National Highway Traffic Safety Administration
NOTICES
Agency Information Collection Activities; Proposals, Submissions, and Approvals:
Reports, Forms, and Record Keeping Requirements, 36865–36867
Nonconforming Motor Vehicles Eligible for Importation, 36867–36868
Petitions for Inconsequential Noncompliance:
Chrysler Group, LLC, 36868–36869

National Institute of Standards and Technology
NOTICES
Agency Information Collection Activities; Proposals, Submissions, and Approvals:
Small Business Innovation Research (SBIR) Program Application Cover Sheet, 36725–36726

National Oceanic and Atmospheric Administration
PROPOSED RULES
Fisheries Financing Program:
Construction of New Replacement Fishing Vessels, 36699–36702
Fisheries of the Exclusive Economic Zone off Alaska:
Bering Sea and Aleutian Islands Management Area; Amendment 105; Bering Sea and Aleutian Islands Flatfish Harvest Specifications Flexibility, 36702–36718
NOTICES
Foreign Fishing Permits, 36726
National Environmental Policy Act Compliance for Council–Initiated Fishery Management Actions, 36726–36728
Permit Applications:
Atlantic Highly Migratory Species; Atlantic Bluefin Tuna Fisheries, 36728–36729
Takes of Marine Mammals Incidental to Specified Activities:
3D Seismic Survey in Prudhoe Bay, Beaufort Sea, AK, 36730–36743
Conductor Pipe Installation Activities at Harmony Platform in Santa Barbara Channel Offshore of California, 36743–36769
Geohazard Survey in the Beaufort Sea, AK, 36769–36782

National Park Service
NOTICES
Agency Information Collection Activities; Proposals, Submissions, and Approvals:
Archeology Permit Applications and Reports, 36818–36819

Nuclear Regulatory Commission
RULES
Revision of Fee Schedules, 37124–37154
NOTICES
Environmental Impact Statements; Availability, etc.:
DTE Electric Co., Fermi 2, 36837–36839

Occupational Safety and Health Administration
NOTICES
Agency Information Collection Activities; Proposals, Submissions, and Approvals, 36831–36832
Agency Information Collection Activities; Proposals, Submissions, and Approvals:
Forging Machines, 36832–36834
Voluntary Protection Programs Information, 36834–36836

Patent and Trademark Office
NOTICES
Admission to Practice and Roster:
Registered Patent Attorneys and Agents Admitted to Practice, 36782–36786
Examination Instruction and Guidance Pertaining to Patent-Eligible Subject Matter, 36786

Securities and Exchange Commission
NOTICES
Meetings; Sunshine Act, 36839–36840

Order Directing the Exchanges and the Financial Industry Regulatory Authority to Submit a Tick Size Pilot Plan, 36840–36848
Self-Regulatory Organizations; Proposed Rule Changes:
Financial Industry Regulatory Authority, Inc., 36855–36856
Fixed Income Clearing Corp., 36856–36857
International Securities Exchange, LLC, 36848–36851
ISE Gemini, LLC, 36854–36855
NYSE Arca, Inc., 36849, 36851–36853

Transportation Department
See Federal Aviation Administration
See Federal Railroad Administration
See Maritime Administration
See National Highway Traffic Safety Administration
NOTICES
Agency Information Collection Activities; Proposals, Submissions, and Approvals, 36857–36858
Agency Information Collection Activities; Proposals, Submissions, and Approvals:
Office of Small and Disadvantaged Business Utilization Mentor Protege Pilot Program, 36858–36859
Certificates of Public Convenience and Necessity and Foreign Air Carrier Permits; Applications, 36859

Treasury Department
See Alcohol and Tobacco Tax and Trade Bureau
See Comptroller of the Currency
See Foreign Assets Control Office
See Internal Revenue Service
NOTICES
Agency Information Collection Activities; Proposals, Submissions, and Approvals, 36869–36872
Requests for Information:
Development of Responsible Private Label Securities Market, 36872–36873

Veterans Affairs Department
NOTICES
Agency Information Collection Activities; Proposals, Submissions, and Approvals:
Servicemember Group Life Insurance Disability Extension Application, 36876–36877

Separate Parts In This Issue

Part II
Environmental Protection Agency, 36880–37075

Part III
Interior Department, Fish and Wildlife Service, 37078–37103

Part IV
Treasury Department, Foreign Assets Control Office, 37106–37121

Part V
Nuclear Regulatory Commission, 37124–37154

Reader Aids

Consult the Reader Aids section at the end of this page for phone numbers, online resources, finding aids, reminders, and notice of recently enacted public laws.

To subscribe to the Federal Register Table of Contents LISTSERV electronic mailing list, go to http://listserv.access.gpo.gov and select Online mailing list archives, FEDREGTOC-L, Join or leave the list (or change settings); then follow the instructions.

CFR PARTS AFFECTED IN THIS ISSUE

A cumulative list of the parts affected this month can be found in the Reader Aids section at the end of this issue.

10 CFR
170 37124
171 37124

14 CFR
39 (5 documents) 36629, 36631, 36634, 36635, 36638

Proposed Rules:
39 (6 documents) 36666, 36669, 36672, 36675, 36678, 36680

26 CFR
1 36640

27 CFR

Proposed Rules:
9 36683

31 CFR
537 37124

33 CFR
165 36655

40 CFR
52 36655
79 36657
80 36657
85 36657
86 36657
300 36658
600 36657
1036 36657
1037 36657
1039 36657
1042 36657
1048 36657
1054 36657
1065 36657
1066 36657

Proposed Rules:
52 (2 documents) 36689, 36692
60 36880
63 36880
81 36692
300 36696

43 CFR
3830 36662

50 CFR
17 37078

Proposed Rules:
17 36698
253 36699
679 36702

Rules and Regulations

Federal Register
Vol. 79, No. 125
Monday, June 30, 2014

This section of the FEDERAL REGISTER contains regulatory documents having general applicability and legal effect, most of which are keyed to and codified in the Code of Federal Regulations, which is published under 50 titles pursuant to 44 U.S.C. 1510.

The Code of Federal Regulations is sold by the Superintendent of Documents. Prices of new books are listed in the first FEDERAL REGISTER issue of each week.

DEPARTMENT OF TRANSPORTATION

Federal Aviation Administration

14 CFR Part 39

[Docket No. FAA–2014–0385; Directorate Identifier 2013–SW–079–AD; Amendment 39–17879; AD 2014–13–04]

RIN 2120–AA64

Airworthiness Directives; Columbia Helicopters, Inc. (Type Certificate Previously Held by Boeing Defense & Space Group) Helicopters

AGENCY: Federal Aviation Administration (FAA), DOT.

ACTION: Final rule; request for comments.

SUMMARY: We are adopting a new airworthiness directive (AD) for Columbia Helicopters, Inc. (Columbia) Model 234 helicopters. This AD requires visually and tap inspecting each fore and aft rotor blade for any defect, damage, or a disbond and, if necessary, repairing or replacing the blade. Also, this AD requires dye-penetrant inspecting the aft pylon structure for fatigue cracking in certain areas near the attachment fittings and, if there is a crack, repairing or replacing the aft pylon. This AD is prompted by an accident caused by fatigue failure of an aft pylon fitting attach structure combined with aft rotor blade damage. The actions specified by this AD are intended to detect fatigue cracks in the aft pylon attach structure to prevent overload of the aft pylon structure and failure of the rotor blade, rotor blade vibration, departure of the aft pylon, and subsequent loss of control of the helicopter.

DATES: This AD becomes effective July 15, 2014.

The Director of the Federal Register approved the incorporation by reference of certain documents listed in this AD as of July 15, 2014.

We must receive comments on this AD by August 29, 2014.

ADDRESSES: You may send comments by any of the following methods:

- *Federal eRulemaking Docket:* Go to *http://www.regulations.gov.* Follow the online instructions for sending your comments electronically.
- *Fax:* 202–493–2251.
- *Mail:* Send comments to the U.S. Department of Transportation, Docket Operations, M–30, West Building Ground Floor, Room W12–140, 1200 New Jersey Avenue SE., Washington, DC 20590–0001.
- *Hand Delivery:* Deliver to the ''Mail'' address between 9 a.m. and 5 p.m., Monday through Friday, except Federal holidays.

Examining the AD Docket

You may examine the AD docket on the Internet at *http://www.regulations.gov* or in person at the Docket Operations Office between 9 a.m. and 5 p.m., Monday through Friday, except Federal holidays. The AD docket contains this AD, any incorporated by reference service information, the economic evaluation, any comments received, and other information. The street address for the Docket Operations Office (telephone 800–647–5527) is in the **ADDRESSES** section. Comments will be available in the AD docket shortly after receipt.

For service information identified in this AD, contact Columbia Helicopters, Inc., 14452 Arndt Road NE., Aurora OR 97002, telephone (503) 678–1222, fax (503) 678–5841, or at *http://www.colheli.com/.*

You may review the referenced service information at the FAA, Office of the Regional Counsel, Southwest Region, 2601 Meacham Blvd., Room 663, Fort Worth, Texas 76137.

FOR FURTHER INFORMATION CONTACT: Kathleen Arrigotti, Aviation Safety Engineer, Seattle Aircraft Certification Office, Transport Airplane Directorate, FAA, 1601 Lind Avenue SW., Renton, Washington 98057; telephone (425) 917–6426; email *kathleen.arrigotti@faa.gov.*

SUPPLEMENTARY INFORMATION:

Comments Invited

This AD is a final rule that involves requirements affecting flight safety, and we did not provide you with notice and an opportunity to provide your comments prior to it becoming effective. However, we invite you to participate in this rulemaking by submitting written comments, data, or views. We also invite comments relating to the economic, environmental, energy, or federalism impacts that resulted from adopting this AD. The most helpful comments reference a specific portion of the AD, explain the reason for any recommended change, and include supporting data. To ensure the docket does not contain duplicate comments, commenters should send only one copy of written comments, or if comments are filed electronically, commenters should submit them only one time. We will file in the docket all comments that we receive, as well as a report summarizing each substantive public contact with FAA personnel concerning this rulemaking during the comment period. We will consider all the comments we receive and may conduct additional rulemaking based on those comments.

Discussion

We are adopting a new AD for Columbia Model 234 helicopters. This AD requires visually and tap inspecting each rotor blade for any defect, damage, or disbond. If there is a defect, damage, or a disbond, this AD requires the blade to be repaired or replaced before further flight. Also, this AD requires dye-penetrant inspecting the aft pylon structure for a crack in the area of the station (STA) 534 and 594 tension attachment fittings. If there is a crack, this AD requires repairing or replacing the aft pylon before further flight. This AD is prompted by an accident caused by fatigue failure of the structure surrounding the aft pylon following an aft rotor blade failure. Due to existing blade damage, a portion of an aft rotor blade separated from the aircraft, causing vibration, which accelerated fatigue cracking of the aft pylon surrounding structure and overloaded the structure to failure. This caused the aft pylon to separate from the aircraft. The actions specified in this AD are intended to detect cracks in the aft pylon surrounding structure and defects, damage, or disbonds in the rotor blades and to prevent separation of a portion of the rotor blade, vibration, overload of the aft pylon surrounding structure, departure of the aft pylon, and

subsequent loss of control of the helicopter.

FAA's Determination

We are issuing this AD because we evaluated all the relevant information and determined the unsafe condition described previously is likely to exist or develop in other helicopters of this same type design.

Related Service Information

Columbia issued Service Bulletin No. 234–54–0004, Revision 0, dated November 22, 2013 (SB 234–54–0004), specifying an initial and recurring dye-penetrant inspection to detect and correct cracking of the aft pylon structure at the STA 534 and 594 tension attachment fittings. If a crack is found, SB 234–54–0004 specifies contacting the manufacturer before further flight.

Columbia also issued Service Bulletin No. 234–62–0008, Revision 1, dated December 6, 2013 (SB 234–62–0008), specifying recurring visual inspections of the entire rotor blade for defects, damage and disbonds and recurring tap inspections of the rotor blade trailing edge for disbonding conditions. If any damage or disbond is detected, SB 234–62–0008 specifies referring to the maintenance manual for serviceability and repair, contacting the manufacturer for repair assistance, or replacing the blade before further flight.

AD Requirements

This AD requires:

- Within 50 hours time-in-service (TIS):
  - Cleaning, visually inspecting, and tap inspecting each rotor blade for a defect, damage, or disbond.
  - Repairing any defect, damage, or disbond if within acceptable limits, and replacing the blade if beyond acceptable limits, before further flight.
- Within 50 hours TIS and thereafter at intervals not to exceed 100 hours TIS, inspecting the aft pylon at STA 534 and 594 as follows:
  - Dye-penetrant inspecting the aft pylon at the attachment fittings and surrounding structure for a crack.
  - If there is a crack, before further flight, repairing or replacing the aft pylon.

This AD prohibits installing an aft pylon or a rotor blade until these inspections are accomplished.

Differences Between This AD and the Service Information

This AD does not require the 500-hour TIS inspection of the rotor blade or the 3,000 hour TIS after initial inspection of the pylon structure as specified in the service information. We plan to publish a notice of proposed rulemaking to give the public an opportunity to comment on those long-term requirements. Also, this AD does not require contacting the manufacturer.

Interim Action

We consider this AD to be an interim action. The design approval holder is currently developing a terminating action that will address the unsafe condition identified in this AD. Once this terminating action is identified, we might consider further rulemaking then.

Costs of Compliance

We estimate that this AD affects 4 helicopters of U.S. Registry. We estimate that operators may incur the following costs to comply with this AD. Labor costs are estimated at $85 per hour. We estimate 1 work hour to visually inspect all blades, 6 work hours to dye-penetrant inspect the pylon, and 4 work hours to do the tap test inspection. Based on these estimates, the total cost is $935 per helicopter and $3,740 for the U.S. fleet. To replace a blade, we estimate 4 work hours and $250,000 for parts, for a total cost of $250,340 per helicopter.

FAA's Justification and Determination of the Effective Date

Providing an opportunity for public comments before adopting these AD requirements would delay implementing the safety actions needed to correct this known unsafe condition. Therefore, we find that the risk to the flying public justifies waiving notice and comment prior to adopting this rule because of the severity of the failure and high rate of occurrence for repairs in blades and cracks in the pylon on other aircraft. Also, the required corrective actions must be done within 50 hours TIS, a very short time period based on the average flight-hour utilization rate of these helicopters. The repetitive inspections are required at intervals not to exceed 100 hours TIS, which can be reached within as short a time as 2 weeks.

Since an unsafe condition exists that requires the immediate adoption of this AD, we determined that notice an opportunity for public comment before issuing this AD are impracticable and contrary to the public interest and that good cause exists for making this amendment effective in less than 30 days.

Authority for This Rulemaking

Title 49 of the United States Code specifies the FAA's authority to issue rules on aviation safety. Subtitle I, section 106, describes the authority of the FAA Administrator. ''Subtitle VII: Aviation Programs,'' describes in more detail the scope of the Agency's authority.

We are issuing this rulemaking under the authority described in ''Subtitle VII, Part A, Subpart III, and Section 44701: General requirements.'' Under that section, Congress charges the FAA with promoting safe flight of civil aircraft in air commerce by prescribing regulations for practices, methods, and procedures the Administrator finds necessary for safety in air commerce. This regulation is within the scope of that authority because it addresses an unsafe condition that is likely to exist or develop on products identified in this rulemaking action.

Regulatory Findings

We determined that this AD will not have federalism implications under Executive Order 13132. This AD will not have a substantial direct effect on the States, on the relationship between the national Government and the States, or on the distribution of power and responsibilities among the various levels of government.

For the reasons discussed, I certify that this AD:

1. Is not a ''significant regulatory action'' under Executive Order 12866;
2. Is not a ''significant rule'' under DOT Regulatory Policies and Procedures (44 FR 11034, February 26, 1979);
3. Will not affect intrastate aviation in Alaska to the extent that it justifies making a regulatory distinction; and
4. Will not have a significant economic impact, positive or negative, on a substantial number of small entities under the criteria of the Regulatory Flexibility Act.

We prepared an economic evaluation of the estimated costs to comply with this AD and placed it in the AD docket.

List of Subjects in 14 CFR Part 39

Air transportation, Aircraft, Aviation safety, Incorporation by reference, Safety.

Adoption of the Amendment

Accordingly, under the authority delegated to me by the Administrator, the FAA amends 14 CFR part 39 as follows:

PART 39—AIRWORTHINESS DIRECTIVES

■ 1. The authority citation for part 39 continues to read as follows:

Authority: 49 U.S.C. 106(g), 40113, 44701.

§ 39.13 [Amended]

■ 2. The FAA amends § 39.13 by adding the following new airworthiness directive (AD):

2014–13–04 Columbia Helicopters, Inc. (Type Certificate Previously Held By Boeing Defense & Space Group) Helicopters: Amendment 39–17879; Docket No. FAA–2014–0385; Directorate Identifier 2013–SW–079–AD.

(a) Applicability

This AD applies to Model 234 helicopters, certificated in any category.

(b) Unsafe Condition

This AD defines the unsafe condition as fatigue failure of aft pylon fitting attach structure combined with aft rotor blade damage. This condition could result in failure of a fore or aft rotor blade, vibration, overload of the aft pylon structure at the pylon attach fittings, departure of the aft pylon, and subsequent loss of control of the helicopter.

(c) Effective Date

This AD becomes effective July 15, 2014.

(d) Compliance

You are responsible for performing each action required by this AD within the specified compliance time unless it has already been accomplished prior to that time.

(e) Required Actions

(1) Within 50 hours time-in-service (TIS):

(i) Clean and inspect each fore and aft rotor blade for a defect, damage, or a disbond in accordance with the Accomplishment Instructions, paragraph 3.A.(1)(b) through 3.A.(2)(b), of Columbia Helicopters, Inc., Service Bulletin No. 234–62–0008, Revision 1, dated December 6, 2013 (SB 234–62–0008).

(ii) Using a metallic coin or tap hammer, tap inspect each rotor blade trailing edge for defect, damage, or a disbond in accordance with the Accomplishment Instructions, paragraph 3.B.(1) through 3.B.(2)(e) and Figures 1 and 2 of SB 234–62–0008.

(iii) If there is any defect, damage, or a disbond, repair the blade before further flight. If the defect, damage, or disbond is beyond acceptable limits, replace the blade before further flight.

(2) Within 50 hours TIS and thereafter at intervals not to exceed 100 hours TIS, inspect the aft pylon at the station 534 and 594 tension attachment fittings as follows:

(i) Dye-penetrant inspect the aft pylon at the attachment fitting for a crack as shown in Figures 1, 2, and 3 and by following the Detailed Special Inspection-Dye Penetrant Method, paragraph 2.A.(2) through 2.G.(1), of Columbia Helicopters, Inc. Service Bulletin No. 234–54–0004, Revision 0, dated November 22, 2013 (SB 234–54–0004).

(ii) If there is a crack, before further flight, repair or replace the aft pylon. Figures 2, 3, 4, and 5 of SB 234–54–0004 contain examples of a crack.

(3) Do not install an aft pylon or a rotor blade until the requirements of paragraphs (e)(1) and (e)(2) of this AD are accomplished.

(f) Alternative Methods of Compliance (AMOCs)

(1) The Manager, Seattle Aircraft Certification Office, FAA, may approve AMOCs for this AD. Send your proposal to: *9-ANM-Seattle-ACO-AMOC-Requests@faa.gov.*

(2) For operations conducted under a 14 CFR part 119 operating certificate or under 14 CFR part 91, subpart K, we suggest that you notify your principal inspector, or lacking a principal inspector, the manager of the local flight standards district office or certificate holding district office before operating any aircraft complying with this AD through an AMOC.

(g) Subject

Joint Aircraft Service Component (JASC) Code: 5400 and 6210 Nacelle/Pylon Structure and Main Rotor Blades.

(h) Material Incorporated by Reference

(1) The Director of the Federal Register approved the incorporation by reference of the service information listed in this paragraph under 5 U.S.C. 552(a) and 1 CFR part 51.

(2) You must use this service information as applicable to do the actions required by this AD, unless the AD specifies otherwise.

(i) Columbia Helicopters, Inc., Service Bulletin No. 234–54–0004, Revision 0, dated November 22, 2013.

(ii) Columbia Helicopters, Inc., Service Bulletin No. 234–62–0008, Revision 1, dated December 6, 2013.

(3) For service information identified in this AD, contact Columbia Helicopters, Inc., 14452 Arndt Road NE., Aurora, OR 97002, telephone (503) 678–1222, fax (503) 678–5841, or at *http://www.colheli.com/.*

(4) You may view this service information at FAA, Office of the Regional Counsel, Southwest Region, 2601 Meacham Blvd., Room 663, Fort Worth, Texas 76137. For information on the availability of this material at the FAA, call (817) 222–5110.

(5) You may view this service information that is incorporated by reference at the National Archives and Records Administration (NARA). For information on the availability of this material at NARA, call (202) 741–6030, or go to: *http://www.archives.gov/federal-register/cfr/ibr-locations.html.*

Issued in Fort Worth, Texas, on June 16, 2014.

Lance T. Gant,

Acting Directorate Manager, Rotorcraft Directorate, Aircraft Certification Service.

[FR Doc. 2014–14800 Filed 6–27–14; 8:45 am]

BILLING CODE 4910–13–P

DEPARTMENT OF TRANSPORTATION

Federal Aviation Administration

14 CFR Part 39

[Docket No. FAA–2013–0862; Directorate Identifier 2012–NM–098–AD; Amendment 39–17863; AD 2014–12–02]

RIN 2120–AA64

Airworthiness Directives; Dassault Aviation Airplanes

AGENCY: Federal Aviation Administration (FAA), Department of Transportation (DOT).

ACTION: Final rule.

SUMMARY: We are adopting a new airworthiness directive (AD) for certain Dassault Aviation Model FALCON 2000 and FALCON 2000EX airplanes. This AD was prompted by a determination that new center of gravity (CG) limits are applicable during takeoff with certain conditions. This AD requires revising the airplane flight manual (AFM) to include procedures to advise the flightcrew of the new CG limits. We are issuing this AD to prevent an erratic takeoff path and consequent reduced controllability of the airplane.

DATES: This AD becomes effective August 4, 2014.

The Director of the Federal Register approved the incorporation by reference of certain publications listed in this AD as of August 4, 2014.

ADDRESSES: You may examine the AD docket on the Internet at *http://www.regulations.gov/#!docketDetail;D=FAA-2013-0862;* or in person at the Docket Management Facility, U.S. Department of Transportation, Docket Operations, M–30, West Building Ground Floor, Room W12–140, 1200 New Jersey Avenue SE., Washington, DC.

For Dassault service information identified in this AD, contact Dassault Falcon Jet, P.O. Box 2000, South Hackensack, NJ 07606; telephone 201–440–6700; Internet *http://www.dassaultfalcon.com.* For Aviation Partners, Inc. service information identified in this AD, contact Aviation Partners, Inc., 7299 Perimeter Road South, Seattle, WA 98108; telephone 800–946–4638; Internet *http://www.aviationpartners.com.* You may view this referenced service information at the FAA, Transport Airplane Directorate, 1601 Lind Avenue SW., Renton, WA. For information on the availability of this material at the FAA, call 425–227–1221.

FOR FURTHER INFORMATION CONTACT: Tom Rodriguez, Aerospace Engineer,

International Branch, ANM–116, Transport Airplane Directorate, FAA, 1601 Lind Avenue SW., Renton, WA 98057–3356; telephone 425–227–1137; fax 425–227–1149.

SUPPLEMENTARY INFORMATION:

Discussion

We issued a notice of proposed rulemaking (NPRM) to amend 14 CFR part 39 by adding an AD that would apply to certain Dassault Aviation Model FALCON 2000 and FALCON 2000EX airplanes. The NPRM published in the **Federal Register** on October 3, 2013 (78 FR 61220). The NPRM was prompted by a determination that new center of gravity (CG) limits applicable during takeoff with a Slat/Flap SF2 setting are necessary. The NPRM proposed to require revising the airplane flight manual (AFM) to include procedures to advise the flightcrew of the new CG limits. We are issuing this AD to prevent an erratic takeoff path and consequent reduced controllability of the airplane.

The European Aviation Safety Agency (EASA), which is the Technical Agent for the Member States of the European Community, has issued EASA Airworthiness Directive 2012–0081, dated May 14, 2012 (referred to after this as the Mandatory Continuing Airworthiness Information, or ''the MCAI''), to correct an unsafe condition for the specified products. The MCAI states:

> During a test flight on a Falcon 2000EX equipped with winglets (commercial designation Falcon 2000LX), performed for the certification of a maximum takeoff weight increase, the aeroplane took off and experienced unsatisfactory control characteristics under specific combined conditions of loading, slat-flap setting and horizontal tailplane trim setting. The weight and the Center of Gravity (CG) of the aeroplane during that test flight were within the already certified limits.
>
> This condition, if not corrected, could result in an erratic take-off path and reduced control of the aeroplane, which could ultimately jeopardize the aeroplane safe flight.
>
> To address this condition, Dassault Aviation developed Change Proposal (CP) 036 to the Airplane Flight Manual (AFM), which introduced new CG limits which are applicable during take-off with Slat/Flap SF2 setting.
>
> Since issuance of EASA PAD [proposed airworthiness directive] 11–077, Dassault Aviation issued a normal AFM revision currently at revision 15, which incorporates Dassault Aviation CP 036.
>
> For the reasons described above, this [EASA] AD requires amendment of the applicable AFM to ensure that the flight crew applies the appropriate operational procedure.

You may examine the MCAI in the AD docket on the Internet at *http://www.regulations.gov/#!documentDetail;D=FAA-2013-0862-0002.*

Comments

We gave the public the opportunity to participate in developing this AD. The following presents the comments received on the proposal (78 FR 61220, October 3, 2013) and the FAA's response to each comment.

Request To Exclude Certain Airplanes

Dassault stated that the NPRM (78 FR 61220, October 3, 2013) excludes Model FALCON F2000EX airplanes on which Dassault Service Bulletin F2000EX–300, Revision 1, dated May 17, 2013, has been embodied. Dassault added that this service information requires installation of a new Arthur unit that is compatible with EASy II avionics, for airplanes on which winglets have been installed using Dassault Modification M2846 or Dassault Aviation Technical Instructions TI–F2000EX–M2846–ME. Dassault does not know whether airplanes which have been fitted with winglets per Aviation Partners Incorporated Supplemental Type Certificates (STCs) can be excluded from the applicability.

We agree to clarify. We have determined that, for Model FALCON F2000EX airplanes modified by Aviation Partners Incorporated STC ST01987SE *http://rgl.faa.gov/Regulatory_and_Guidance_Library/rgstc.nsf/0/1804CCC8BA5562958625770C007757C6?OpenDocument&Highlight=st01987se,* the actions specified in Dassault Service Bulletin F2000EX–300, Revision 1, dated May 17, 2013, can be accomplished. Therefore, if the actions specified in Dassault Service Bulletin F2000EX–300, Revision 1, dated May 17, 2013, have been accomplished on any Model FALCON F2000EX airplane, that airplane is excluded from the applicability of this AD. We have not changed this AD in this regard.

Request To Correct Typographical Error

Dassault noted that there is a typographical error in paragraph (c)(1) of the NPRM (78 FR 61220, October 3, 2013). Dassault stated that Dassault Aviation Modification M2848 should be changed to M2846 because number M2848 is incorrect.

We agree with the commenter's request. The correct modification number is identified in the applicability section of the MCAI; therefore, the modification number in paragraph (c)(1) of this final rule has been changed from M2848 to M2846.

Additional Change Made to This Final Rule

We have revised the formatting of paragraph (g) of this final rule for easier readability. This change does not affect the content of that paragraph.

Conclusion

We reviewed the relevant data, considered the comments received, and determined that air safety and the public interest require adopting this AD with the changes described previously and minor editorial changes. We have determined that these minor changes:

- Are consistent with the intent that was proposed in the NPRM (78 FR 61220, October 3, 2013) for correcting the unsafe condition; and
- Do not add any additional burden upon the public than was already proposed in the NPRM (78 FR 61220, October 3, 2013).

We also determined that these changes will not increase the economic burden on any operator or increase the scope of this AD.

Costs of Compliance

We estimate that this AD affects 69 airplanes of U.S. registry.

We also estimate that it will take about 1 work-hour per product to comply with the basic requirements of this AD. The average labor rate is $85 per work-hour. Required parts will cost about $0 per product. Based on these figures, we estimate the cost of the AD on U.S. operators to be $5,865, or $85 per product.

Authority for This Rulemaking

Title 49 of the United States Code specifies the FAA's authority to issue rules on aviation safety. Subtitle I, section 106, describes the authority of the FAA Administrator. ''Subtitle VII: Aviation Programs,'' describes in more detail the scope of the Agency's authority.

We are issuing this rulemaking under the authority described in ''Subtitle VII, Part A, Subpart III, Section 44701: General requirements.'' Under that section, Congress charges the FAA with promoting safe flight of civil aircraft in air commerce by prescribing regulations for practices, methods, and procedures the Administrator finds necessary for safety in air commerce. This regulation is within the scope of that authority because it addresses an unsafe condition that is likely to exist or develop on products identified in this rulemaking action.

Regulatory Findings

We determined that this AD will not have federalism implications under

Executive Order 13132. This AD will not have a substantial direct effect on the States, on the relationship between the national government and the States, or on the distribution of power and responsibilities among the various levels of government.

For the reasons discussed above, I certify that this AD:

1. Is not a ''significant regulatory action'' under Executive Order 12866;

2. Is not a ''significant rule'' under the DOT Regulatory Policies and Procedures (44 FR 11034, February 26, 1979);

3. Will not affect intrastate aviation in Alaska; and

4. Will not have a significant economic impact, positive or negative, on a substantial number of small entities under the criteria of the Regulatory Flexibility Act.

Examining the AD Docket

You may examine the AD docket on the Internet at *http://www.regulations.gov/#!docketDetail;D=FAA-2013-0862;* or in person at the Docket Management Facility between 9 a.m. and 5 p.m., Monday through Friday, except Federal holidays. The AD docket contains this AD, the regulatory evaluation, any comments received, and other information. The street address for the Docket Operations office (telephone 800–647–5527) is in the **ADDRESSES** section.

List of Subjects in 14 CFR Part 39

Air transportation, Aircraft, Aviation safety, Incorporation by reference, Safety.

Adoption of the Amendment

Accordingly, under the authority delegated to me by the Administrator, the FAA amends 14 CFR part 39 as follows:

PART 39—AIRWORTHINESS DIRECTIVES

■ 1. The authority citation for part 39 continues to read as follows:

Authority: 49 U.S.C. 106(g), 40113, 44701.

§ 39.13 [Amended]

■ 2. The FAA amends § 39.13 by adding the following new AD:

2014–12–02 Dassault Aviation: Amendment 39–17863. Docket No. FAA–2013–0862; Directorate Identifier 2012–NM–098–AD.

(a) Effective Date

This airworthiness directive (AD) becomes effective August 4, 2014.

(b) Affected ADs

None.

(c) Applicability

This AD applies to Dassault Aviation airplanes, certificated in any category, identified in paragraphs (c)(1) and (c)(2) of this AD; except Model FALCON F2000EX airplanes on which Dassault Aviation Modification M3254 or Dassault Service Bulletin F2000EX–300, Revision 1, dated May 17, 2013, has been embodied.

(1) Model FALCON 2000EX airplanes on which Dassault Aviation modification M2846 or Dassault Aviation Technical Instruction TI–F2000EX–M2846–ME or TI–F2000EX–M3118/M2846–ME has been embodied for the installation of winglets, including the airplane having serial number 602.

(2) Model FALCON 2000 and FALCON 2000EX airplanes modified by Aviation Partners Incorporated Supplemental Type Certificate (STC) ST01987SE *http://rgl.faa.gov/Regulatory_and_Guidance_Library/rgstc.nsf/0/1804CCC8BA55629586257 70C007757C6?OpenDocument&Highlight=st01987se* (installation of winglets).

(d) Subject

Air Transport Association (ATA) of America Code 27, Flight Controls.

(e) Reason

This AD was prompted by a determination that new center of gravity (CG) limits applicable during takeoff with a Slat/Flap SF2 setting are necessary. We are issuing this AD to prevent an erratic takeoff path and consequent reduced controllability of the airplane.

(f) Compliance

You are responsible for having the actions required by this AD performed within the compliance times specified, unless the actions have already been done.

(g) Airplane Flight Manual (AFM) Revision

Within 14 days after the effective date of this AD: Revise the AFM by incorporating the CG limits identified in the service information specified in paragraph (g)(1), (g)(2), or (g)(3) of this AD, as applicable.

(1) For airplanes identified in paragraph (c)(1) of this AD: Sub-sub-section 1–050–05C, ''Weights; Center of gravity limits (A/C with M2846 and M3390),'' Issue 2; and Sub-sub-section 1–050–05D, ''Weights; Center of gravity limits (A/C with M2846 and M3000),'' Issue 1; of Sub-section 1–050, ''Weights and Loading,'' of Section 1, ''Limitations,'' Issue 5, of the Dassault Aviation FALCON 2000EX EASy, FALCON 2000DX, and FALCON 2000LX AFM DGT88898, Revision 15, dated October 30, 2011.

(2) For Model FALCON 2000 airplanes identified in paragraph (c)(2) of this AD: Aviation Partners, Inc. Dassault Aviation Falcon 2000 with CFE 738 Engines—Blended Winglets Installation, AFM Supplement APF2–0601, Code 002, Revision 3, dated June 1, 2012.

(3) For Model FALCON 2000EX airplanes identified in paragraph (c)(2) of this AD: Aviation Partners, Inc. Dassault Aviation Falcon 2000EX Series—Blended Winglets Installation, AFM Supplement APF2–0601, Code 001, Revision 4, dated June 1, 2012.

(h) Other FAA AD Provisions

The following provisions also apply to this AD:

(1) *Alternative Methods of Compliance (AMOCs):* The Manager, International Branch, ANM–116, Transport Airplane Directorate, FAA, has the authority to approve AMOCs for this AD, if requested using the procedures found in 14 CFR 39.19. In accordance with 14 CFR 39.19, send your request to your principal inspector or local Flight Standards District Office, as appropriate. If sending information directly to the International Branch, send it to ATTN: Tom Rodriguez, Aerospace Engineer, International Branch, ANM–116, Transport Airplane Directorate, FAA, 1601 Lind Avenue SW., Renton, WA 98057–3356; telephone 425–227–1137; fax 425–227–1149. Information may be emailed to: *9-ANM-116-AMOC-REQUESTS@faa.gov.* Before using any approved AMOC, notify your appropriate principal inspector, or lacking a principal inspector, the manager of the local flight standards district office/certificate holding district office. The AMOC approval letter must specifically reference this AD.

(2) *Airworthy Product:* For any requirement in this AD to obtain corrective actions from a manufacturer or other source, use these actions if they are FAA-approved. Corrective actions are considered FAA-approved if they are approved by the State of Design Authority (or their delegated agent). You are required to assure the product is airworthy before it is returned to service.

(i) Related Information

Refer to Mandatory Continuing Airworthiness Information (MCAI) EASA Airworthiness Directive 2012–0081, dated May 14, 2012, for related information. This MCAI may be found in the AD docket on the Internet at *http://www.regulations.gov/#!documentDetail;D=FAA-2013-0862-0002.*

(j) Material Incorporated by Reference

(1) The Director of the Federal Register approved the incorporation by reference (IBR) of the service information listed in this paragraph under 5 U.S.C. 552(a) and 1 CFR part 51.

(2) You must use this service information as applicable to do the actions required by this AD, unless this AD specifies otherwise.

(i) Dassault Aviation FALCON 2000EX EASy, FALCON 2000DX, and FALCON 2000LX Airplane Flight Manual (AFM) DGT88898, Revision 15, dated October 30, 2011. This document does not contain dates for the ''Issue'' levels of the individual sub-sub-sections. The revision level and date of this document are identified on only the title page of the document.

(ii) Aviation Partners, Inc. Dassault Aviation Falcon 2000 with CFE 738 Engines—Blended Winglets Installation, AFM Supplement APF2–0601, Code 002, Revision 3, dated June 1, 2012. The revision level of this document is identified on only the title page, Revision Highlights, and Log of Pages of this document.

(iii) Aviation Partners, Inc. Dassault Aviation Falcon 2000EX Series—Blended Winglets Installation, AFM Supplement APF2–0601, Code 001, Revision 4, dated June

1, 2012. The revision level of this document is identified on only the title page, Revision Highlights, and Log of Pages of this document.

(3) For Dassault service information identified in this AD, contact Dassault Falcon Jet, P.O. Box 2000, South Hackensack, NJ 07606; telephone 201–440–6700; Internet *http://www.dassaultfalcon.com.*

(4) For Aviation Partners, Inc. service information identified in this AD, contact Aviation Partners, Inc., 7299 Perimeter Road South, Seattle, WA 98108; telephone 800–946–4638; Internet *http://www.aviationpartners.com.*

(5) You may view this service information at the FAA, Transport Airplane Directorate, 1601 Lind Avenue SW., Renton, WA. For information on the availability of this material at the FAA, call 425–227–1221.

(6) You may view this service information that is incorporated by reference at the National Archives and Records Administration (NARA). For information on the availability of this material at NARA, call 202–741–6030, or go to: *http://www.archives.gov/federal-register/cfr/ibr-locations.html.*

Issued in Renton, Washington, on May 28, 2014.

Jeffrey E. Duven,

Manager, Transport Airplane Directorate, Aircraft Certification Service.

[FR Doc. 2014–13319 Filed 6–27–14; 8:45 am]

BILLING CODE 4910–13–P

DEPARTMENT OF TRANSPORTATION

Federal Aviation Administration

14 CFR Part 39

[Docket No. FAA–2006–23809; Directorate Identifier 2005–NE–52–AD; Amendment 39–17866; AD 2014–12–05]

RIN 2120–AA64

Airworthiness Directives; Turbomeca S.A. Turboshaft Engines

AGENCY: Federal Aviation Administration (FAA), DOT.

ACTION: Final rule.

SUMMARY: We are superseding airworthiness directive (AD) 2007–10–07 for all Turbomeca S.A. Arriel 2B, 2B1, and 2B1A turboshaft engines. AD 2007–10–07 required an inspection of the splines of the coupling assembly and the hydro-mechanical metering unit (HMU) drive gear shaft for wear. This AD requires the same inspection and expands the affected population. This AD also removes Arriel 2B1A engines from the applicability. We are issuing this AD to prevent failure of the HMU drive gear shaft, which could lead to damage to the engine and damage to the airplane.

DATES: This AD is effective August 4, 2014.

The Director of the **Federal Register** approved the incorporation by reference of certain publications listed in this AD as of August 4, 2014.

ADDRESSES: For service information identified in this AD, contact Turbomeca, S.A., 40220 Tarnos, France; phone: 33 (0)5 59 74 40 00; telex: 570 042; fax: 33 (0)5 59 74 45 15. You may view this service information at the FAA, Engine & Propeller Directorate, 12 New England Executive Park, Burlington, MA. For information on the availability of this material at the FAA, call 781–238–7125.

Examining the AD Docket

You may examine the AD docket on the Internet at *http://www.regulations.gov* by searching for and locating Docket No. FAA–2006–23809; or in person at the Docket Management Facility between 9 a.m. and 5 p.m., Monday through Friday, except Federal holidays. The AD docket contains this AD, the mandatory continuing airworthiness information (MCAI), the regulatory evaluation, any comments received, and other information. The address for the Docket Office (phone: 800–647–5527) is Document Management Facility, U.S. Department of Transportation, Docket Operations, M–30, West Building Ground Floor, Room W12–140, 1200 New Jersey Avenue SE., Washington, DC 20590.

FOR FURTHER INFORMATION CONTACT: Michael Davison, Aerospace Engineer, Engine Certification Office, FAA, Engine & Propeller Directorate, 12 New England Executive Park; phone: (781) 238–7156; fax: (781) 238–7199; email: *Michael.Davison@faa.gov.*

SUPPLEMENTARY INFORMATION:

Discussion

We issued a notice of proposed rulemaking (NPRM) to amend 14 CFR part 39 to supersede AD 2007–10–07, Amendment 39–15048 (72 FR 26711, May 11, 2007), (''AD 2007–10–07''). AD 2007–10–07 applied to the specified products. The NPRM published in the **Federal Register** on February 21, 2014 (79 FR 9868). The NPRM proposed to require the same inspection as AD 2007–10–07 and expand the affected population. The NPRM also proposed to remove Arriel 2B1A engines from the applicability.

Comments

We gave the public the opportunity to participate in developing this AD. We received no comments on the NPRM (79 FR 9868, February 21, 2014).

Conclusion

We reviewed the available data and determined that air safety and the public interest require adopting this AD as proposed.

Costs of Compliance

We estimate that this AD affects 470 engines installed on aircraft of U.S. registry. We also estimate that it will take about 2 hours per engine to comply with this AD. The average labor rate is $85 per hour. Based on these figures, we estimate the cost of this AD on U.S. operators to be $79,900.

Authority for This Rulemaking

Title 49 of the United States Code specifies the FAA's authority to issue rules on aviation safety. Subtitle I, Section 106, describes the authority of the FAA Administrator. Subtitle VII, Aviation Programs, describes in more detail the scope of the Agency's authority.

We are issuing this rulemaking under the authority described in Subtitle VII, Part A, Subpart III, Section 44701, ''General requirements.'' Under that section, Congress charges the FAA with promoting safe flight of civil aircraft in air commerce by prescribing regulations for practices, methods, and procedures the Administrator finds necessary for safety in air commerce. This regulation is within the scope of that authority because it addresses an unsafe condition that is likely to exist or develop on products identified in this rulemaking action.

Regulatory Findings

This AD will not have federalism implications under Executive Order 13132. This AD will not have a substantial direct effect on the States, on the relationship between the national government and the States, or on the distribution of power and responsibilities among the various levels of government.

For the reasons discussed above, I certify that this AD:

(1) Is not a ''significant regulatory action'' under Executive Order 12866,

(2) Is not a ''significant rule'' under DOT Regulatory Policies and Procedures (44 FR 11034, February 26, 1979),

(3) Will not affect intrastate aviation in Alaska to the extent that it justifies making a regulatory distinction, and

(4) Will not have a significant economic impact, positive or negative, on a substantial number of small entities under the criteria of the Regulatory Flexibility Act.

List of Subjects in 14 CFR Part 39

Air transportation, Aircraft, Aviation safety, Incorporation by reference, Safety.

Adoption of the Amendment

Accordingly, under the authority delegated to me by the Administrator, the FAA amends part 39 of the Federal Aviation Regulations (14 CFR part 39) as follows:

PART 39—AIRWORTHINESS DIRECTIVES

■ 1. The authority citation for part 39 continues to read as follows:

Authority: 49 U.S.C. 106(g), 40113, 44701.

§ 39.13 [Amended]

■ 2. The FAA amends § 39.13 by removing airworthiness directive (AD) 2007–10–07, Amendment 39–15048 (72 FR 26711, May 11, 2007), and adding the following new AD:

2014–12–05 Turbomeca S.A: Amendment 39–17866; Docket No. FAA–2006–23809; Directorate Identifier 2005–NE–52–AD.

(a) Effective Date

This AD is effective August 4, 2014.

(b) Affected ADs

This AD supersedes AD 2007–10–07, Amendment 39–15048 (72 FR 26711, May 11, 2007).

(c) Applicability

This AD applies to all Turbomeca S.A. Arriel 2B, 2B1, 2C, 2C1, 2C2, 2S1, and 2S2 turboshaft engines.

(d) Unsafe Condition

This AD was prompted by a report of an additional case of wear of the hydro-mechanical metering unit (HMU) drive gear shaft splines on both Turbomeca S.A. Arriel 2 engines on a twin-engine helicopter. We are issuing this AD to prevent failure of the HMU drive gear shaft, which could lead to damage to the engine and damage to the aircraft.

(e) Compliance

Comply with this AD within the compliance times specified, unless already done.

(1) Arriel 2B and 2B1 Engines

(i) If on the effective date of this AD the HMU has 500 or more operating hours since new or since last overhaul, then within 25 HMU operating hours from the effective date of this AD, inspect the high-pressure (HP) pump drive gear shaft splines and coupling shaft assembly splines. Use paragraph 2.B.(1)(b) of Turbomeca S.A. Mandatory Service Bulletin (MSB) No. 292 73 2812, Version G, dated June 24, 2013, to do your inspection.

(ii) If on the effective date of this AD the HMU has less than 500 operating hours since new or since last overhaul, then inspect the HP pump drive gear shaft splines and coupling shaft assembly splines between 500 and 525 operating hours since new or since last overhaul. Use paragraph 2.B.(1)(b) of Turbomeca S.A. MSB No. 292 73 2812, Version G, dated June 24, 2013, to do your inspection.

(2) Arriel 2C, 2C1, 2C2, 2S1, and 2S2 Engines

(i) If on the effective date of this AD the HMU has 500 or more operating hours since new, since last overhaul, or if HMU operating hours are unknown, then within 200 HMU operating hours from the effective date of this AD, inspect the HP pump drive gear shaft splines and coupling shaft assembly splines. Use paragraph 2.B.(1)(b) of Turbomeca S.A. MSB No. 292 73 2822, Version F, dated June 21, 2013, to do your inspection.

(ii) If on the effective date of this AD the HMU has more than 300 but less than 500 operating hours since new or since last overhaul, then within 225 HMU operating hours, but no earlier than 500 or later than 700 HMU operating hours from the effective date of this AD, inspect the HP pump drive gear shaft splines and coupling shaft assembly splines. Use paragraph 2.B.(1)(b) of Turbomeca S.A. MSB No. 292 73 2822 Version F, dated June 21, 2013, to do your inspection.

(iii) If on the effective date of this AD the HMU has 300 operating hours or less since new or since last overhaul, then inspect the HP pump drive gear shaft splines and coupling shaft assembly splines between 500 and 525 HMU operating hours since new or since last overhaul. Use paragraph 2.B.(1)(b) of Turbomeca S.A. MSB No. 292 73 2822, Version F, dated June 21, 2013, to do your inspection.

(f) Credit for Previous Actions

If, before the effective date of this AD, you inspected your HMU after 500 HMU operating hours since new or since last overhaul using an earlier version of Turbomeca S.A. MSB No. 292 73 2822, Version F, dated June 21, 2013, for 2C, 2C1, 2C2, 2S1 and 2S2 engines, or MSB No. 292 73 2812, Version G, dated June 24, 2013, for 2B or 2B1 engines, you have met the requirements of this AD.

(g) Installation Prohibition

After the effective date of this AD, do not install any HMU onto any engine, nor install any engine onto any helicopter with an HMU affected by this AD, unless the HMU passed the inspection required by paragraph (e)(1) of this AD for Arriel 2B and 2B1 engines or paragraph (e)(2) of this AD for Arriel 2C, 2C1, 2C2, 2S1, and 2S2 engines.

(h) Alternative Methods of Compliance (AMOCs)

The Manager, Engine Certification Office, FAA, may approve AMOCs to this AD. Use the procedures found in 14 CFR 39.19 to make your request.

(i) Related Information

(1) For more information about this AD, contact Michael Davison, Aerospace Engineer, Engine Certification Office, FAA, Engine & Propeller Directorate, 12 New England Executive Park; phone: (781) 238–7156; fax: (781) 238–7199; email: *Michael.Davison@faa.gov.*

(2) Refer to MCAI European Aviation Safety Agency AD 2013–0170, dated July 30, 2013, for related information. You may examine the MCAI in the AD docket on the Internet at *http://www.regulations.gov/#!docketDetail;D=FAA-2006-23809.*

(j) Material Incorporated by Reference

(1) The Director of the Federal Register approved the incorporation by reference (IBR) of the service information listed in this paragraph under 5 U.S.C. 552(a) and 1 CFR part 51.

(2) You must use this service information as applicable to do the actions required by this AD, unless the AD specifies otherwise.

(i) Turbomeca S.A. Mandatory Service Bulletin (MSB) No. 292 73 2822, Version F, dated June 21, 2013.

(ii) Turbomeca S.A. MSB No. 292 73 2812, Version G, dated June 24, 2013.

(3) For Turbomeca S.A. service information identified in this AD, contact Turbomeca, S.A., 40220 Tarnos, France; phone: 33 (0)5 59 74 40 00; telex: 570 042; fax: 33 (0)5 59 74 45 15.

(4) You may view this service information at FAA, Engine & Propeller Directorate, 12 New England Executive Park, Burlington, MA. For information on the availability of this material at the FAA, call 781–238–7125.

(5) You may view this service information at the National Archives and Records Administration (NARA). For information on the availability of this material at NARA, call 202–741–6030, or go to: *http://www.archives.gov/federal-register/cfr/ibr-locations.html.*

Issued in Burlington, Massachusetts, on June 2, 2014.

Colleen M. D'Alessandro,

Assistant Directorate Manager, Engine & Propeller Directorate, Aircraft Certification Service.

[FR Doc. 2014–14951 Filed 6–27–14; 8:45 am]

BILLING CODE 4910–13–P

DEPARTMENT OF TRANSPORTATION

Federal Aviation Administration

14 CFR Part 39

[Docket No. FAA–2014–0394; Directorate Identifier 2014–SW–015–AD; Amendment 39–17875; AD 2014–13–01]

RIN 2120–AA64

Airworthiness Directives; Airbus Helicopters Deutschland GmbH (Airbus Helicopters) (Previously Eurocopter Deutschland GmbH) Helicopters

AGENCY: Federal Aviation Administration (FAA), Department of Transportation (DOT).

ACTION: Final rule; request for comments.

SUMMARY: We are adopting a new airworthiness directive (AD) for Airbus Helicopters Model MBB–BK 117 C–2 helicopters with a certain Goodrich rescue hoist damper unit (damper unit) installed. This AD requires repairing or replacing the damper unit or deactivating the rescue hoist. This AD is prompted by a report of an uncommanded detachment of a damper unit from the cable. These actions are intended to prevent loss of an external load or person from the helicopter hoist and injury to persons being lifted by the hoist.

DATES: This AD becomes effective July 15, 2014.

The Director of the Federal Register approved the incorporation by reference of a certain document listed in this AD as of July 15, 2014.

We must receive comments on this AD by August 29, 2014.

ADDRESSES: You may send comments by any of the following methods:

- *Federal eRulemaking Docket:* Go to *http://www.regulations.gov.* Follow the online instructions for sending your comments electronically.
- *Fax:* 202–493–2251.
- *Mail:* Send comments to the U.S. Department of Transportation, Docket Operations, M–30, West Building Ground Floor, Room W12–140, 1200 New Jersey Avenue SE., Washington, DC 20590–0001.
- *Hand Delivery:* Deliver to the ''Mail'' address between 9 a.m. and 5 p.m., Monday through Friday, except Federal holidays.

Examining the AD Docket

You may examine the AD docket on the Internet at *http://www.regulations.gov* or in person at the Docket Operations Office between 9 a.m. and 5 p.m., Monday through Friday, except Federal holidays. The AD docket contains this AD, the European Aviation Safety Agency (EASA) AD, any incorporated by reference service information, the economic evaluation, any comments received, and other information. The street address for the Docket Operations Office (telephone 800- 647–5527) is in the **ADDRESSES** section. Comments will be available in the AD docket shortly after receipt.

For service information identified in this AD, contact Airbus Helicopters, Inc., 2701 N. Forum Drive, Grand Prairie, TX 75052; telephone (972) 641–0000 or (800) 232–0323; fax (972) 641–3775; or at *http://www.airbushelicopters.com/techpub.* You may review the referenced service information at the FAA, Office of the Regional Counsel, Southwest Region, 2601 Meacham Blvd., Room 663, Fort Worth, Texas 76137.

FOR FURTHER INFORMATION CONTACT: George Schwab, Aviation Safety Engineer, Safety Management Group, Rotorcraft Directorate, FAA, 2601 Meacham Blvd., Fort Worth, Texas 76137; telephone (817) 222–5110; email *george.schwab@faa.gov.*

SUPPLEMENTARY INFORMATION:

Comments Invited

This AD is a final rule that involves requirements affecting flight safety, and we did not provide you with notice and an opportunity to provide your comments prior to it becoming effective. However, we invite you to participate in this rulemaking by submitting written comments, data, or views. We also invite comments relating to the economic, environmental, energy, or federalism impacts that resulted from adopting this AD. The most helpful comments reference a specific portion of the AD, explain the reason for any recommended change, and include supporting data. To ensure the docket does not contain duplicate comments, commenters should send only one copy of written comments, or if comments are filed electronically, commenters should submit them only one time. We will file in the docket all comments that we receive, as well as a report summarizing each substantive public contact with FAA personnel concerning this rulemaking during the comment period. We will consider all the comments we receive and may conduct additional rulemaking based on those comments.

Discussion

EASA, which is the Technical Agent for the Member States of the European Union, has issued AD No. 2014–0057, dated March 6, 2014, and corrected March 7, 2014 (AD 2014–0057), to correct an unsafe condition for Airbus Helicopters Model MBB–BK 117 C–2 helicopters. EASA advises that a rescue hoist damper unit detached from the cable when the hoist damper was lifted by hand with no load attached. EASA further advises that an investigation revealed the retaining ring inside the damper unit was not located in the proper position, and that this displacement of the retaining ring may have occurred as a maintenance error or as a result of interference with the bonding strap unit during normal use. EASA further states that this condition could lead to the detachment of an external load or person from the helicopter hoist, possibly resulting in personal injury or injury to persons on the ground.

To address this unsafe condition, EASA issued AD 2014–0057, which supersedes AD No. 2014–0046–E, dated February 27, 2014, and which requires replacing Goodrich rescue hoist damper unit/rescue winch damper, part number (P/N) 44307–480, P/N 44307–480–1, or P/N 44307–480–2, or deactivating the rescue hoist. AD 2014–0057 also requires modifying the damper unit's bonding strap and replacing the retaining ring, which allows reactivation of the rescue hoist. Lastly, AD 2014–0057 implements a recurring 100 hoist-cycle inspection of the retaining ring for correct installation.

FAA's Determination

These helicopters have been approved by the aviation authority of Germany and are approved for operation in the United States. Pursuant to our bilateral agreement with Germany, EASA, its technical representative, has notified us of the unsafe condition described in the EASA AD. We are issuing this AD because we evaluated all information provided by EASA and determined the unsafe condition exists and is likely to exist or develop on other helicopters of the same type design.

Related Service Information

Airbus Helicopters has issued Emergency Alert Service Bulletin No. ASB MBB–BK117 C–2–85A–041, Revision 2, dated March 4, 2014, which describes procedures for modifying the bonding strap unit, installing an improved retaining ring, and inspecting the retaining ring.

AD Requirements

This AD requires, before the next hoist operation, either repairing the hoist damper unit by following specified portions of the service information, replacing the hoist damper unit with a unit that has been repaired by following specified portions of the service information, or deactivating the rescue hoist.

Differences Between This AD and the EASA AD

The EASA AD requires a 100 hoist-cycle repetitive inspection, while this AD does not. We plan to publish a notice of proposed rulemaking to give the public an opportunity to comment on those long-term requirements.

Interim Action

We consider this AD to be an interim action. If final action is later identified, we might consider further rulemaking then.

Costs of Compliance

We estimate that this AD will affect 118 helicopters of U.S. Registry. We estimate that operators may incur the following costs in order to comply with this AD. At an average labor rate of $85 per hour, repairing the hoist damper unit will require 5 work-hours, and required parts will cost $4, for a cost per helicopter of $429. Replacing the hoist damper unit will require 1 work-hour, and required parts will cost $8,715, for a cost per helicopter of $8,800. Deactivating the rescue hoist will require .5 work-hour, for a cost per helicopter of $43.

According to Airbus Helicopters' service information, some of the costs of this AD may be covered under warranty, thereby reducing the cost impact on affected individuals. We do not control warranty coverage by Airbus Helicopters. Accordingly, we have included all costs in our cost estimate.

FAA's Justification and Determination of the Effective Date

Providing an opportunity for public comments before adopting these AD requirements would delay implementing the safety actions needed to correct this known unsafe condition. Therefore, we find that the risk to the flying public justifies waiving notice and comment prior to adopting this rule because the required corrective actions must be done before the next hoist operation.

Since an unsafe condition exists that requires the immediate adoption of this AD, we determined that notice and opportunity for public comment before issuing this AD are impracticable and contrary to the public interest and that good cause exists for making this amendment effective in less than 30 days.

Authority for This Rulemaking

Title 49 of the United States Code specifies the FAA's authority to issue rules on aviation safety. Subtitle I, section 106, describes the authority of the FAA Administrator. ''Subtitle VII: Aviation Programs,'' describes in more detail the scope of the Agency's authority.

We are issuing this rulemaking under the authority described in ''Subtitle VII, Part A, Subpart III, Section 44701: General requirements.'' Under that section, Congress charges the FAA with promoting safe flight of civil aircraft in air commerce by prescribing regulations for practices, methods, and procedures the Administrator finds necessary for safety in air commerce. This regulation is within the scope of that authority because it addresses an unsafe condition that is likely to exist or develop on products identified in this rulemaking action.

Regulatory Findings

We determined that this AD will not have federalism implications under Executive Order 13132. This AD will not have a substantial direct effect on the States, on the relationship between the national Government and the States, or on the distribution of power and responsibilities among the various levels of government.

For the reasons discussed, I certify that this AD:

1. Is not a ''significant regulatory action'' under Executive Order 12866;
2. Is not a ''significant rule'' under DOT Regulatory Policies and Procedures (44 FR 11034, February 26, 1979);
3. Will not affect intrastate aviation in Alaska to the extent that it justifies making a regulatory distinction; and
4. Will not have a significant economic impact, positive or negative, on a substantial number of small entities under the criteria of the Regulatory Flexibility Act.

We prepared an economic evaluation of the estimated costs to comply with this AD and placed it in the AD docket.

List of Subjects in 14 CFR Part 39

Air transportation, Aircraft, Aviation safety, Incorporation by reference, Safety.

Adoption of the Amendment

Accordingly, under the authority delegated to me by the Administrator, the FAA amends 14 CFR part 39 as follows:

PART 39—AIRWORTHINESS DIRECTIVES

■ 1. The authority citation for part 39 continues to read as follows:

Authority: 49 U.S.C. 106(g), 40113, 44701.

§ 39.13 [Amended]

■ 2. The FAA amends § 39.13 by adding the following new airworthiness directive (AD):

2014–13–01 Airbus Helicopters Deutschland GmbH (Airbus Helicopters) (Previously Eurocopter Deutschland GmbH): Amendment 39–17875; Docket No. FAA–2014–0394; Directorate Identifier 2014–SW–015–AD.

(a) Applicability

This AD applies to Airbus Helicopters Model MBB–BK 117 C–2 helicopters with a Goodrich hoist damper unit, part number (P/N) 44307–480, P/N 44307–480–1, or P/N 44307–480–2, installed, certificated in any category.

(b) Unsafe Condition

This AD defines the unsafe condition as uncommanded detachment of the external hoist damper unit, which could result in loss of an external load or person from the hoist, resulting in injury to persons being lifted by the hoist.

(c) Effective Date

This AD becomes effective July 15, 2014.

(d) Compliance

You are responsible for performing each action required by this AD within the specified compliance time unless it has already been accomplished prior to that time.

(e) Required Actions

Before the next hoist operation, comply with paragraph (e)(1), (e)(2), or (e)(3) of this AD:

(1) Repair and re-identify each hoist damper unit in accordance with the Accomplishment Instructions, paragraph 3.B.1, of Airbus Helicopters Emergency Alert Service Bulletin ASB No. MBB–BK117 C–2–85A–041, Revision 2, dated March 4, 2014; or

(2) Replace each hoist damper unit with a unit that has been repaired as required by paragraph (e)(1) of this AD; or

(3) Deactivate the rescue hoist system.

(f) Alternative Methods of Compliance (AMOCs)

(1) The Manager, Safety Management Group, FAA, may approve AMOCs for this AD. Send your proposal to: George Schwab, Aviation Safety Engineer, Safety Management Group, Rotorcraft Directorate, FAA, 2601 Meacham Blvd., Fort Worth, Texas 76137; telephone (817) 222–5110; email *george.schwab@faa.gov.*

(2) For operations conducted under a 14 CFR part 119 operating certificate or under 14 CFR part 91, subpart K, we suggest that you notify your principal inspector, or lacking a principal inspector, the manager of the local flight standards district office or certificate holding district office, before operating any aircraft complying with this AD through an AMOC.

(g) Additional Information

The subject of this AD is addressed in European Aviation Safety Agency (EASA) AD No. 2014–0057, dated March 6, 2014, and corrected March 7, 2014. You may view the EASA AD on the Internet at *http://www.regulations.gov* in Docket No. FAA–2014–0394.

(h) Subject

Joint Aircraft Service Component (JASC) Code: 2500: Cabin Equipment Furnishings.

(i) Material Incorporated by Reference

(1) The Director of the **Federal Register** approved the incorporation by reference of the service information listed in this paragraph under 5 U.S.C. 552(a) and 1 CFR part 51.

(2) You must use this service information as applicable to do the actions required by this AD, unless the AD specifies otherwise.

(i) Airbus Helicopters Emergency Alert Service Bulletin No. ASB MBB–BK117 C–2–85A–041, Revision 2, dated March 4, 2014.

(ii) Reserved.

(3) For Airbus Helicopters service information identified in this AD, contact Airbus Helicopters, Inc., 2701 N. Forum Drive, Grand Prairie, TX 75052; telephone (972) 641–0000 or (800) 232–0323; fax (972) 641–3775; or at *http://www.airbushelicopters.com/techpub.*

(4) You may view this service information at FAA, Office of the Regional Counsel, Southwest Region, 2601 Meacham Blvd., Room 663, Fort Worth, Texas 76137. For information on the availability of this material at the FAA, call (817) 222–5110.

(5) You may view this service information that is incorporated by reference at the National Archives and Records Administration (NARA). For information on the availability of this material at NARA, call (202) 741–6030, or go to: *http://www.archives.gov/federal-register/cfr/ibr-locations.html.*

Issued in Fort Worth, Texas, on June 13, 2014.

Kim Smith,

Directorate Manager, Rotorcraft Directorate, Aircraft Certification Service.

[FR Doc. 2014–14623 Filed 6–27–14; 8:45 am]

BILLING CODE 4910–13–P

DEPARTMENT OF TRANSPORTATION

Federal Aviation Administration

14 CFR Part 39

[Docket No. FAA–2013–1090; Directorate Identifier 2013–SW–017–AD; Amendment 39–17873; AD 2014–12–12]

RIN 2120–AA64

Airworthiness Directives; Airbus Helicopters (Previously Eurocopter France) Helicopters

AGENCY: Federal Aviation Administration (FAA), DOT.

ACTION: Final rule.

SUMMARY: We are adopting a new airworthiness directive (AD) for certain Airbus Helicopters Model EC120B and EC130B4 helicopters. This AD requires replacing parts of the sliding door star support attachment assembly, depending on the outcome of required inspections. This AD is prompted by a report that passengers in a helicopter were forced to exit through the pilot door after landing because they could not open the sliding door from the inside. The actions of this AD are intended to prevent failure of the sliding door star support attachment, which could inhibit operation of a sliding door from inside, delaying the evacuation of passengers during an emergency.

DATES: This AD is effective August 4, 2014.

The Director of the Federal Register approved the incorporation by reference of certain documents listed in this AD as of August 4, 2014.

ADDRESSES: For service information identified in this AD, contact Airbus Helicopters, Inc., 2701 N. Forum Drive, Grand Prairie, Texas 75052; telephone (972) 641–0000 or (800) 232–0323; fax (972) 641–3775; or at *http://www.airbushelicopters.com/techpub.* You may review the referenced service information at the FAA, Office of the Regional Counsel, Southwest Region, 2601 Meacham Blvd., Room 663, Fort Worth, Texas 76137.

Examining the AD Docket

You may examine the AD docket on the Internet at *http://www.regulations.gov* or in person at the Docket Operations Office between 9 a.m. and 5 p.m., Monday through Friday, except Federal holidays. The AD docket contains this AD, the European Aviation Safety Agency (EASA) AD, any incorporated-by-reference service information, the economic evaluation, any comments received, and other information. The street address for the Docket Operations Office (phone: 800–647–5527) is U.S. Department of Transportation, Docket Operations Office, M–30, West Building Ground Floor, Room W12–140, 1200 New Jersey Avenue SE., Washington, DC 20590.

FOR FURTHER INFORMATION CONTACT: Gary Roach, Aviation Safety Engineer, Regulations and Policy Group, Rotorcraft Directorate, FAA, 2601 Meacham Blvd., Fort Worth, Texas 76137; telephone (817) 222–5110; email *gary.b.roach@faa.gov.*

SUPPLEMENTARY INFORMATION:

Discussion

On January 2, 2014, at 79 FR 74, the **Federal Register** published our notice of proposed rulemaking (NPRM), which proposed to amend 14 CFR part 39 by adding an AD that would apply to certain Eurocopter France (now Airbus Helicopters) Model EC120B and EC130B4 helicopters. The NPRM proposed to require, within 165 hours time-in-service, visually inspecting the upper and lower locking pin control rod end fittings, and replacing the control end fitting before further flight if it is bent, twisted, or broken. The NPRM also proposed to require cleaning and dye penetrant inspecting the star support pin for a crack, and replacing the star support pin before further flight if there is a crack. Lastly, the NPRM proposed to require reinforcing the sliding door star support stringer by installing three carbon fabric plies. The proposed requirements were intended to prevent failure of the operation of a sliding door from inside, which could delay evacuation of passengers during an emergency.

The NPRM was prompted by AD No. 2013–0093, dated April 15, 2013, and corrected on April 17, 2013, issued by EASA, which is the Technical Agent for the Member States of the European Union, to correct an unsafe condition for Model EC120B and EC130B4 helicopters after a case was reported where passengers could not open a helicopter's sliding door after landing. EASA advises that an investigation revealed a failure of the sliding door star axle support.

Since we issued the NPRM, Eurocopter France changed its name to Airbus Helicopters. This AD reflects that change and updates the contact information to obtain service documentation.

Comments

We gave the public the opportunity to participate in developing this AD, but we did not receive any comments on the NPRM (79 FR 74, January 2, 2014).

FAA's Determination

These helicopters have been approved by the aviation authority of France and are approved for operation in the United States. Pursuant to our bilateral agreement with France, EASA, its technical representative, has notified us of the unsafe condition described in the EASA AD. We are issuing this AD because we evaluated all information provided by EASA and determined the unsafe condition exists and is likely to exist or develop on other helicopters of these same type designs and that air safety and the public interest require adopting the AD requirements as proposed, except for the name change previously described and a minor editorial change in referencing the service information in paragraph (e)(2) of this AD to meet current publishing requirements. These changes are consistent with the intent of the proposals in the NPRM (79 FR 74, January 2, 2014) and will not increase the economic burden on any operator nor increase the scope of the AD.

Related Service Information

Eurocopter issued Alert Service Bulletin (ASB) No. EC120–52A014 for Model EC120B helicopters and ASB No. EC130–52A009 for Model EC130B4 helicopters, both Revision 1, and both dated January 25, 2013. The ASBs state that the star support pin ruptured on the

kinematics of the sliding door locking system, and the rupture prevents sliding doors from operating. The ASBs specify visual and dye penetrant inspections of sections of the sliding door attachment assembly and reinforcement of the sliding door star support.

Costs of Compliance

We estimate that this AD will affect 284 helicopters of U.S. Registry. We estimate that operators may incur the following costs in order to comply with this AD with an average labor cost of $85 per work-hour:

- Visually inspecting the upper and lower locking pin control rod end fittings requires 1 work-hour and a minimal amount for consumable materials for an estimated cost of $85 per helicopter, or $24,140 for the U.S. fleet.
- Replacing the upper and lower locking pin control rod end fittings with airworthy fittings requires 5 work-hours for a labor cost of $425. Parts will cost about $242 for an estimated total cost of $667 per helicopter.
- Dye penetrant inspecting the star support pin for a crack requires 2 work-hours and no parts for an estimated cost of $170 per helicopter.
- Replacing the star support pin requires 5 work-hours. Parts will cost about $200 for an estimated total cost of $625 per helicopter.
- Installing three carbon fabric plies to reinforce the sliding door star support requires 5 work-hours. Parts will cost $200 for an estimated total cost of $625 per helicopter.

Authority for This Rulemaking

Title 49 of the United States Code specifies the FAA's authority to issue rules on aviation safety. Subtitle I, section 106, describes the authority of the FAA Administrator. Subtitle VII: Aviation Programs, describes in more detail the scope of the Agency's authority.

We are issuing this rulemaking under the authority described in Subtitle VII, Part A, Subpart III, Section 44701: ''General requirements.'' Under that section, Congress charges the FAA with promoting safe flight of civil aircraft in air commerce by prescribing regulations for practices, methods, and procedures the Administrator finds necessary for safety in air commerce. This regulation is within the scope of that authority because it addresses an unsafe condition that is likely to exist or develop on helicopters identified in this rulemaking action.

Regulatory Findings

This AD will not have federalism implications under Executive Order 13132. This AD will not have a substantial direct effect on the States, on the relationship between the national government and the States, or on the distribution of power and responsibilities among the various levels of government.

For the reasons discussed above, I certify that this AD:

(1) Is not a ''significant regulatory action'' under Executive Order 12866;

(2) Is not a ''significant rule'' under DOT Regulatory Policies and Procedures (44 FR 11034, February 26, 1979);

(3) Will not affect intrastate aviation in Alaska to the extent that it justifies making a regulatory distinction; and

(4) Will not have a significant economic impact, positive or negative, on a substantial number of small entities under the criteria of the Regulatory Flexibility Act.

We prepared an economic evaluation of the estimated costs to comply with this AD and placed it in the AD docket.

List of Subjects in 14 CFR Part 39

Air transportation, Aircraft, Aviation safety, Incorporation by reference, Safety.

Adoption of the Amendment

Accordingly, under the authority delegated to me by the Administrator, the FAA amends 14 CFR part 39 as follows:

PART 39—AIRWORTHINESS DIRECTIVES

■ 1. The authority citation for part 39 continues to read as follows:

Authority: 49 U.S.C. 106(g), 40113, 44701.

§ 39.13 [Amended]

■ 2. The FAA amends § 39.13 by adding the following new airworthiness directive (AD):

2014–12–12 Airbus Helicopters (Previously Eurocopter France): Amendment 39–17873; Docket No. FAA–2013–1090; Directorate Identifier 2013–SW–017–AD.

(a) Applicability

This AD applies to following helicopters, certificated in any category, except those helicopters with modification 07 3796 or 07 2921 installed:

(1) Model EC120B helicopters, serial numbers up to and including 1367, with a sliding door, Part Number (P/N) C526A2370101, installed; and

(2) Model EC130B4 helicopters with a sliding door, P/N C526S1101051, installed.

(b) Unsafe Condition

This AD defines the unsafe condition as a failure of the sliding door star axle support. This condition could prevent operation of a sliding door from inside, which could delay evacuation of passengers during an emergency.

(c) Effective Date

This AD becomes effective August 4, 2014.

(d) Compliance

You are responsible for performing each action required by this AD within the specified compliance time unless it has already been accomplished prior to that time.

(e) Required Actions

Within 165 hours time-in-service:

(1) Visually inspect each upper and lower locking pin control rod end fitting (control end fitting) for a bend, twist, or breakage. If a control end fitting is bent, twisted, or broken, before further flight, replace the control end fitting with an airworthy control end fitting.

(2) Clean and dye penetrant inspect the star support pin for a crack in the areas identified as Zone X and Zone Y in Figure 3 of Eurocopter Alert Service Bulletin No. EC120–52A014, Revision 1, dated January 25, 2013 (ASB No. EC120–52A014) or Eurocopter Alert Service Bulletin No. EC130–52A009, Revision 1, dated January 25, 2013 (ASB No. EC130–52A009), as applicable to your model helicopter. If there is a crack in the star support pin, before further flight, replace the star support pin with an airworthy star support pin.

(3) Reinforce the sliding door star support stringer by installing three carbon fabric plies by following the Accomplishment Instructions, paragraph 3.B.2.d. of ASB No. EC120–52A014 or ASB No. EC130–52A009, as applicable to your model helicopter, except this AD does not require you to comply with paragraph 3.C.

(f) Alternative Methods of Compliance (AMOCs)

(1) The Manager, Safety Management Group, FAA, may approve AMOCs for this AD. Send your proposal to: Gary Roach, Aviation Safety Engineer, Regulations and Policy Group, Rotorcraft Directorate, FAA, 2601 Meacham Blvd., Fort Worth, Texas 76137; telephone (817) 222–5110; email *gary.b.roach@faa.gov*.

(2) For operations conducted under a 14 CFR part 119 operating certificate or under 14 CFR part 91, subpart K, we suggest that you notify your principal inspector, or lacking a principal inspector, the manager of the local flight standards district office or certificate holding district office, before operating any aircraft complying with this AD through an AMOC.

(g) Additional Information

The subject of this AD is addressed in European Aviation Safety Agency (EASA) AD No. 2013–0093, dated April 15, 2013, and corrected on April 17, 2013. You may view the EASA AD on the Internet at *http://www.regulations.gov* in Docket No. FAA–2013–1090.

(h) Subject

Joint Aircraft Service Component (JASC) Code: 5220, Emergency Exits.

(i) Material Incorporated by Reference

(1) The Director of the Federal Register approved the incorporation by reference of the service information listed in this paragraph under 5 U.S.C. 552(a) and 1 CFR part 51.

(2) You must use this service information as applicable to do the actions required by this AD, unless the AD specifies otherwise.

(i) Eurocopter Alert Service Bulletin No. EC120–52A014, Revision 1, dated January 25, 2013.

(ii) Eurocopter Alert Service Bulletin No. EC130–52A009, Revision 1, dated January 25, 2013.

(3) For Eurocopter service information identified in this AD, contact Airbus Helicopters, Inc., 2701 N. Forum Drive, Grand Prairie, Texas 75052; telephone (972) 641–0000 or (800) 232–0323; fax (972) 641–3775; or at *http://www.airbushelicopters.com/techpub*.

(4) You may view this service information at FAA, Office of the Regional Counsel, Southwest Region, 2601 Meacham Blvd., Room 663, Fort Worth, Texas 76137. For information on the availability of this material at the FAA, call (817) 222–5110.

(5) You may view this service information that is incorporated by reference at the National Archives and Records Administration (NARA). For information on the availability of this material at NARA, call (202) 741–6030, or go to: *http://www.archives.gov/federal-register/cfr/ibr-locations.html*.

Issued in Fort Worth, Texas, on June 13, 2014.

Kim Smith,

Directorate Manager, Rotorcraft Directorate, Aircraft Certification Service.

[FR Doc. 2014–14621 Filed 6–27–14; 8:45 am]

BILLING CODE 4910–13–P

DEPARTMENT OF THE TREASURY

Internal Revenue Service

26 CFR Part 1

[TD 9672]

RIN 1545–BL55

Tax Credit for Employee Health Insurance Expenses of Small Employers

AGENCY: Internal Revenue Service (IRS), Treasury.

ACTION: Final regulations.

SUMMARY: This document contains final regulations on the tax credit available to certain small employers that offer health insurance coverage to their employees. The credit is provided under section 45R of the Internal Revenue Code (Code), enacted by the Patient Protection and Affordable Care Act. These regulations affect small employers, both taxable and tax-exempt that are or might be eligible for the tax credit.

DATES: *Effective date:* These regulations are effective on June 30, 2014.

Applicability dates: For dates of applicability, see § 1.45R–5(d).

FOR FURTHER INFORMATION CONTACT: Stephanie Caden, (202) 317–6846 (not a toll-free number).

SUPPLEMENTARY INFORMATION:

Background

Section 45R of the Code offers a tax credit to certain small employers that provide insured health coverage to their employees. Section 45R was added to the Code by section 1421 of the Patient Protection and Affordable Care Act, enacted March 23, 2010, Public Law 111–148 (as amended by section 10105(e) of the Patient Protection and Affordable Care Act, which was amended by the Health Care and Education Reconciliation Act of 2010, Public Law 111–152 (124 Stat. 1029)) (collectively, the ''Affordable Care Act'').

Section 45R(a) provides a health insurance credit that is available to certain eligible small employers for any taxable year in the credit period. Section 45R(d) provides that in order to be an eligible small employer with respect to any taxable year, an employer must have in effect a contribution arrangement that qualifies under section 45R(d)(4) and must have no more than 25 full-time equivalent employees (FTEs), and the average annual wages of its FTEs must not exceed an amount equal to twice the dollar amount determined under section 45R(d)(3)(B). The amount determined under section 45R(d)(3)(B) is $25,000 (a dollar amount which is adjusted for inflation for taxable years beginning after December 31, 2013, and is $25,400 for taxable years beginning in 2014).

Section 45R(d)(4) provides that a contribution arrangement qualifies if it requires an eligible small employer to make a nonelective contribution on behalf of each employee who enrolls in a qualified health plan (QHP) offered to employees by the employer through an Exchange in an amount equal to a uniform percentage (not less than 50 percent) of the premium cost of the QHP (referred to in this preamble as the uniform percentage requirement). For purposes of section 45R, an Exchange refers to a Small Business Health Options Program (SHOP) Exchange, established pursuant to section 1311 of the Affordable Care Act and defined in 45 CFR 155.20. For purposes of this preamble and the final regulations, a contribution arrangement that meets these requirements is referred to as a ''qualifying arrangement.''

Section 45R(b) provides that, subject to the reductions described in section 45R(c), the amount of the credit is equal to 50 percent (35 percent in the case of a tax-exempt eligible small employer) of the lesser of (1) the aggregate amount of nonelective contributions the employer made on behalf of its employees during the taxable year under the qualifying arrangement for premiums for QHPs offered by the employer to its employees through a SHOP Exchange, or (2) the aggregate amount of nonelective contributions the employer would have made during the taxable year under the arrangement if each employee for which a contribution would be taken into account under clause (1) of this sentence had enrolled in a QHP which had a premium equal to the average premium (as determined by the Secretary of Health and Human Services) for the small group market in the rating area in which the employee enrolls for coverage.

Section 45R(c) phases out the credit based upon the number of the employer's FTEs in excess of 10 and the amount by which the average annual wages exceeds $25,000 (a dollar amount which is adjusted for inflation for taxable years beginning after December 31, 2013, and is $25,400 for taxable years beginning in 2014). Specifically, section 45R(c) provides that the credit amount determined under section 45R(b) is reduced (but not below zero) by the sum of: (1) The credit amount determined under section 45R(b) multiplied by a fraction, the numerator of which is the total number of FTEs of the employer in excess of 10 and the denominator of which is 15, and (2) the credit amount determined under section 45R(b) multiplied by a fraction, the numerator of which is the average annual wages of the employer in excess of the dollar amount in effect under section 45R(d)(3)(B) and the denominator of which is that dollar amount. Section 45R(d)(3) provides that the average annual wages of an eligible small employer for any taxable year is the amount determined by dividing the aggregate amount of wages that were paid by the employer to employees during the taxable year by the number of FTEs of the employer and rounding that amount to the next lowest multiple of $1,000.

Section 45R(e)(2) provides that for taxable years beginning in or after 2014, the credit period means the two-consecutive-taxable year period beginning with the first taxable year in which the employer (or any predecessor) offers one or more QHPs to

its employees through a SHOP Exchange.

For taxable years beginning in 2010, 2011, 2012, and 2013, section 45R(g) provides that the credit is determined without regard to whether the taxable year is in a credit period, and no credit period is treated as beginning with a taxable year beginning before 2014. The maximum amount of the credit for those years is 35 percent (25 percent in the case of a tax-exempt eligible small employer) of an eligible small employer's nonelective contributions for premiums paid for health insurance coverage (within the meaning of section 9832(b)(1)) of an employee. Section 45R(g)(3) provides that an employer does not become ineligible for the tax credit for years beginning prior to 2014 solely because it arranges for the offering of insurance outside of a SHOP Exchange.

In 2010, the Treasury Department and the IRS published two notices addressing the application of section 45R that taxpayers may rely upon for taxable years beginning before 2014: (1) Notice 2010–44 (2010–22 IRB 717 (June 1, 2010)) (addressing the eligibility requirements and how to calculate and claim the credit, and providing transition relief for taxable years beginning in 2010 with respect to qualifying arrangements); and Notice 2010–82 (2010–51 IRB 857 (December 20, 2010)) (expanding guidance on the eligibility requirements, the uniform percentage requirement, and the application of the average premium cap).

On August 26, 2013, the Treasury Department and the IRS released a notice of proposed rulemaking (REG–113792–13, 78 FR 52719) to provide guidance on the application of section 45R for years beginning on or after January 1, 2014. The section of the preamble to these proposed regulations entitled ''Proposed Effective/Applicability Dates'' provided that employers may rely on the proposed regulations for guidance for taxable years beginning after 2013 and before 2015. Fourteen comments responded to the notice of proposed rulemaking; no public hearing was requested or held. After consideration of all of the comments, these final regulations adopt the provisions of the proposed regulations with certain modifications, the most significant of which are highlighted in the Explanation and Summary of Comments below. All comments are available for public inspection at *www.regulations.gov* or upon request.

The Treasury Department and the IRS issued Notice 2014–6 (2014–2 IRB 279 (January 6, 2014)), which provides transition relief for certain small employers that cannot offer a QHP through a SHOP Exchange because the employer's principal business address is in a particular listed county in which a QHP will not be available through a SHOP Exchange for the 2014 calendar year.

Explanation and Summary of Comments

I. In General

The proposed regulations and these final regulations generally incorporate the provisions of Notice 2010–44 and Notice 2010–82 as modified to reflect the differences between the statutory provisions applicable to years beginning before 2014 and those applicable to years beginning after 2013. As in Notice 2010–44 and Notice 2010–82, the proposed and final regulations use the term ''qualifying arrangement'' to describe an arrangement under which an eligible small employer pays premiums for each employee enrolled in health insurance coverage offered by the employer in an amount equal to a uniform percentage (not less than 50 percent) of the premium cost of the coverage. Section 45R(d)(4) also requires that, for taxable years beginning in or after 2014, the health insurance coverage described in a qualifying arrangement be a QHP offered by an employer to its employees through a SHOP Exchange (subject to certain transition guidance for 2014). The final regulations generally retain these provisions and definitions. The final regulations also add definitions for the term ''tobacco surcharge,'' which refers to the surcharge in addition to the premium that may be charged in the SHOP Exchange that is attributable to tobacco use, and for the term ''wellness program,'' which refers to a program under which discounts or rebates are offered for employee participation in programs promoting health. These definitions incorporate terms found in 45 CFR 147.102(a) of the final regulations for Health Insurance Market Rules, issued on February 27, 2013 (78 FR 13406), and § 54.9802–1(f) of the final regulations on Incentives for Nondiscriminatory Wellness Programs in Group Health Plans, issued on June 3, 2013 (78 FR 33157).

II. Eligibility for the Credit

Consistent with section 45R and the proposed regulations, these final regulations define an eligible small employer as an employer that has no more than 25 FTEs for the taxable year, whose employees have average annual wages of no more than $50,000 per FTE (as adjusted for inflation for years after 2013), and that has a qualifying arrangement in effect that requires the employer to pay a uniform percentage (not less than 50 percent) of the premium cost of a QHP offered by the employer to its employees through a SHOP Exchange.[1] These regulations define a tax-exempt eligible small employer as an eligible small employer that is described in section 501(c) and that is exempt from tax under section 501(a). These regulations also provide that all employers treated as a single employer under section 414(b), (c), (m), or (o) are treated as a single employer for purposes of section 45R.

Consistent with the proposed regulations, these final regulations further provide that employees (determined under the common law standard) who perform services for the employer during the taxable year generally are taken into account in determining FTEs and average annual wages. In determining FTEs, these regulations provide that FTEs are calculated by computing the total hours of service for the taxable year (using one of three allowable methods) and dividing by 2,080. If the result is not a whole number, the result is rounded down to the next lowest whole number, except if the result is less than one the employer rounds up to one FTE. One commenter requested that the FTE calculation include only full-time employees who work 40 hours a week and not part-time employees. The final regulations do not adopt this suggestion because it is inconsistent with the statutory definition of full-time equivalent employee set forth in section 45R(d)(2). These final regulations provide that leased employees, as defined in section 414(n)(2), are counted in computing a service recipient's FTEs and average annual wages. See section 45R(e)(1)(B). These regulations also provide that premiums paid on behalf of a former employee may be treated as paid on behalf of an employee for purposes of calculating the credit provided that if so treated, the former employee is also treated as an employee for purposes of the uniform percentage requirement. See § 1.45R–1(a)(5)(vii).

Consistent with the proposed regulations, these final regulations provide that an employee's hours of service for a year include hours for which the employee is paid, or entitled

[1] Although the term, ''eligible small employer'' is defined in section 45R(d)(1) to include employers with ''no more than 25 FTEs,'' the phase out of the credit amount under section 45R(c) operates in such a way that an employer with exactly 25 FTEs is not in fact eligible for the credit.

to payment, for the performance of duties for the employer during the employer's taxable year and provide three methods for calculating the total number of hours of service for employees for the taxable year. One commenter requested that employees of educational organizations be credited with hours of service during employment breaks because the use of a 12-month measurement period for employees who provide services only during the active portions of the academic year could inappropriately result in these employees not being treated as full-time employees. The final regulations do not adopt this suggestion because it is inconsistent with the statutory framework of section 45R, which bases calculations on FTEs, not full-time employees.

Wages, for purposes of the credit, are defined in these final regulations (and the proposed regulations) as amounts treated as wages under section 3121(a) for purposes of FICA, determined without considering the social security wage base limitation. To calculate average annual FTE wages, an employer must determine the total wages paid during the taxable year to all employees, divide the total wages paid by the number of FTEs, and if the result is not a multiple of $1,000, round the result to the next lowest multiple of $1,000. One commenter requested that the final regulations clarify whether bonuses are included in the average annual wage calculation. The proposed and these final regulations provide that the average annual wage limitation is determined using the definition of wages found in section 3121(a), determined without regard to the social security wage base limitation under section 3121(a)(1); therefore, bonuses would be included to the extent treated as wages under section 3121(a) for purposes of FICA.

Based on section 45R(d)(5), the proposed regulations and these final regulations provide that employees who work on a seasonal basis for 120 or fewer days during the taxable year are not considered employees when determining FTEs and average annual wages, but premiums paid on behalf of seasonal workers may be counted in determining the amount of the credit. One commenter requested clarification of whether all employees who terminate employment before working 120 days are considered seasonal employees for purposes of the FTE calculation. The final regulations, like the proposed regulations, provide that only workers who perform labor or services on a seasonal basis, including retail workers employed exclusively during holiday seasons, meet the definition of a seasonal worker for purposes of the credit. The final regulations further provide that employers may apply a reasonable, good faith interpretation of the term seasonal worker and a reasonable good faith interpretation of 29 CFR 500.20(s)(1) (including as applied by analogy to workers and employment positions not otherwise covered under 29 CFR 500.20(s)(1)).

III. Calculating the Credit

Under section 45R and these final regulations, for taxable years beginning in or after 2014, the maximum credit for an eligible small employer other than a tax-exempt eligible small employer is 50 percent of the eligible small employer's premium payments made on behalf of its employees under a qualifying arrangement for QHPs offered through a SHOP Exchange. For a tax-exempt eligible small employer for those years, the maximum credit is 35 percent.

As provided in the proposed regulations, for purposes of calculating the credit under section 45R for taxable years beginning after 2013, the final regulations provide that an employer's premium payments are limited by the average premium in the small group market in the rating area in which the employee enrolls for coverage through a SHOP Exchange. The credit will be reduced by the excess of the credit calculated using the employer's premium payments over the credit calculated using the average premium. For example, if an employer pays 50 percent of the $7,000 premium for employee coverage ($3,500), but the average premium for employee coverage in the small group market in the rating area in which the employees enroll is $6,000, for purposes of calculating the credit the employer's premium payments are limited to 50 percent of $6,000 ($3,000).

Under section 45R and the proposed regulations, the credit phases out for eligible small employers if the number of FTEs exceeds 10, or if the average annual wages for FTEs exceed $25,000 (as adjusted for inflation for taxable years beginning after 2013). For an employer with both more than 10 FTEs and average annual FTE wages exceeding $25,000, the credit is reduced based on the sum of the two reductions. This may reduce the credit to zero even for some employers with fewer than 25 FTEs and average annual FTE wages of less than double the $25,000 dollar amount (as adjusted for inflation). These final regulations incorporate these statutory phase-out provisions, and also retain the provisions pertaining to state subsidies and tax credit limitations.

With respect to the payroll tax limitation for tax-exempt employers, section 45R and the proposed regulations defined the term ''payroll taxes'' as (1) amounts required to be withheld under section 3402 [2] and (2) the employee's and employer's shares of Medicare tax required to be withheld and paid under sections 3101(b) and 3111(b) on employees' wages for the year. For a tax-exempt eligible small employer, the amount of the credit cannot exceed the amount of the payroll taxes of the employer during the calendar year in which the taxable year begins. The final regulations retain these provisions.

Consistent with the proposed regulations, these final regulations provide that the first year for which an eligible small employer files Form 8941, ''Credit for Small Employer Health Insurance Premiums,'' claiming the credit, or files Form 990–T, ''Exempt Organization Business Income Tax Return,'' with an attached Form 8941, is the first year of the two-consecutive-taxable year credit period. Even if the employer is eligible to claim the credit for only part of the first year, the filing of Form 8941 begins the first year of the two-consecutive-taxable year credit period, regardless of when the employer begins offering QHPs through a SHOP. A commenter noted that the two-year limit on the credit period might cause some employers to discontinue contributing to coverage once the credit expires after two years. However, the statutory language imposes the limitation and the final regulations incorporate these provisions of the proposed regulations pertaining to the two-consecutive-taxable year credit period limitation.

In general, only premiums paid by the employer for employees enrolled in a QHP offered through a SHOP Exchange are counted when calculating the credit. A stand-alone dental health plan offered through a SHOP Exchange will be considered a QHP for purposes of the credit. See Patient Protection and Affordable Care Act; Establishment of Exchanges and Qualified Health Plans; Exchange Standards for Employers, 77 FR 18310, 18315 (March 27, 2012).

Consistent with the proposed regulations, these final regulations provide that amounts made available by an employer under, or contributed by an employer to, Health Reimbursement

[2] Although section 45R(f)(3)(A)(i) cites to section 3401(a)(1) as imposing the obligation on employers to withhold income tax from employees, it is actually section 3402 that imposes the withholding obligation. We have cited to section 3402 throughout this preamble and in the proposed and these final regulations.

Arrangements (HRAs), health flexible spending arrangements (FSAs), and health savings accounts (HSAs) are not taken into account for purposes of determining premium payments by the employer when calculating the credit. One commenter requested that household employers be allowed to claim the credit through use of an HRA. The final regulations do not adopt this modification. An employer's premium payments are not taken into account for purposes of the section 45R credit unless they are paid for health insurance coverage under a qualifying arrangement, which is an arrangement under which the employer pays premiums for each employee enrolled in health insurance coverage offered by the employer in an amount equal to a uniform percentage (not less than 50 percent) of the premium cost of the coverage. For taxable years beginning in or after 2014, generally an employer must make premium payments on behalf of its employees for QHPs offered by the employer to its employees through a SHOP. Because an HRA is a self-insured plan, this type of arrangement is not health insurance coverage for purposes of the credit and employer contributions to this type of arrangement are not taken into account for purposes of the credit for any year.

Also, consistent with the proposed regulations, the final regulations provide that a minister who is a common law employee is taken into account in an employer's FTE calculation and the premiums paid by the employer for health insurance for the minister may be counted in calculating the credit.

With respect to trusts, estates, regulated investment companies, real estate investment trusts, and cooperative organizations, section 45R(e)(5)(B) provides that rules similar to the rules of section 52(c), (d), and (e) will apply. Because section 45R(f) explicitly provides that a tax-exempt eligible small employer may be eligible for the credit, these regulations do not adopt a rule similar to section 52(c) but do provide that rules similar to the rules of section 52(d) and (e) and the regulations thereunder apply in calculating and apportioning the credit with respect to these entities.

If an eligible small employer's plan year begins on a date other than the first day of its taxable year, it may not be practical or possible for the employer to offer insurance to its employees through a SHOP Exchange at the beginning of its first taxable year beginning in 2014. The proposed regulations provided a transition rule that applies if (1) as of August 26, 2013, an eligible small employer offers coverage in a plan year that begins on a date other than the first day of its taxable year, (2) the employer offers coverage during the period before the first day of the plan year beginning in 2014 that would have qualified the employer for the credit under the rules otherwise applicable to the period before January 1, 2014, and (3) the employer begins offering coverage through a SHOP Exchange as of the first day of its plan year that begins in 2014. Under the transition rule, the small employer will be treated as offering coverage through a SHOP Exchange for its entire 2014 taxable year for purposes of eligibility for, and calculation of, a credit under section 45R. Thus, for an employer that meets these requirements, the credit will be calculated at the 50 percent rate (35 percent rate for tax-exempt eligible small employers) for the entire 2014 taxable year and the 2014 taxable year will be the start of the two-consecutive-taxable year credit period. One commenter requested that this transition rule apply to all employers that have plan years that do not match their taxable years, including those that changed plan years after August 26, 2013, and that it should not be limited to those employers having a plan year that does not match the taxable year as of August 26, 2013. However, the intent of the rule was to provide relief for employers that had plan years that did not match their taxable years when the proposed regulations were issued and not to provide a mechanism to change plan years to maximize the credit without satisfying the statutory requirements. Accordingly, the final regulations include without change the transition rule set forth in the proposed regulations.

Several commenters requested the credit be made available to eligible small employers if a SHOP Exchange is not available in the employer's principal place of business for the 2014 calendar year. Treasury and the IRS issued Notice 2014–6 to address these concerns with respect to eligible small employers with a principal business address in counties (listed in the Notice) in which no qualified health plans are available through a SHOP Exchange for 2014.[3] For purposes of the transition rule provided in the final regulations for an eligible small employer with a group health plan year that begins on a date in 2014 other than the first day of the employer's taxable year, an employer with a principal business address in one of the counties listed in Notice 2014–6 is not required to begin offering coverage through a SHOP Exchange as of the first day of its plan year that begins in 2014 in order to be treated as offering coverage through a SHOP Exchange for its entire 2014 year. Instead, such an employer is required to continue offering health insurance coverage for the plan year that begins in 2014 that would have qualified for a tax credit under section 45R under the rules applicable before 2014.

In accordance with Notice 2014–6, small employers described in the preceding paragraph may calculate the credit by treating health insurance coverage provided for the 2014 health plan year as qualifying for the section 45R credit, provided that the coverage would have qualified for a credit under section 45R under the rules applicable before 2014. This treatment applies with respect to the health plan year beginning in 2014, including any portion of that plan year that continues into 2015. If the eligible small employer claims the section 45R credit for the 2014 taxable year, the credit will be calculated at the 50 percent rate (35 percent rate for tax-exempt eligible small employers) for the entire 2014 taxable year, and the 2014 taxable year will be the first year of the two-consecutive-taxable-year credit period. In addition, if the eligible small employer claims the section 45R credit for the portion of the 2014 health plan year that continues into 2015, the tax credit will be calculated at the 50 percent rate (35 percent rate for tax-exempt eligible small employers) for the corresponding portion of the 2015 taxable year.

III. Application of Uniform Percentage Requirement

A. Uniform Premium

Section 45R requires that to be eligible for the credit, a small employer must generally pay a uniform percentage (not less than 50 percent) of the premium for each employee enrolled in a QHP offered to its employees through a SHOP Exchange. The proposed regulations set forth requirements for applying this requirement in separate situations depending upon (1) whether the premium established for the QHP is based upon list billing or is based upon composite billing, (2) whether the QHP offers only employee-only coverage, or

[3] The counties listed in Notice 2014–6 are: Washington—Adams, Asotin, Benton, Chelan, Clallam, Columbia, Douglas, Ferry, Franklin, Garfield, Grant, Grays Harbor, Island, Jefferson, King, Kitsap, Kittitas, Klickitat, Lewis, Lincoln, Mason, Okanogan, Pacific, Pend Oreille, Pierce, San Juan, Skagit, Skamania, Snohomish, Spokane, Stevens, Thurston, Wahkiakum, Walla Walla, Whatcom, Whitman, and Yakima counties; and Wisconsin—Green Lake, Lafayette, Marquette, Florence, and Menominee counties.

other tiers of coverage, such as family coverage, and (3) whether the employer offers one QHP or more than one QHP. The final regulations incorporate the uniform percentage requirement provisions from the proposed regulations, but also contain additional rules for how to apply the uniform percentage requirement if SHOP dependent coverage is offered (for a definition and discussion of SHOP dependent coverage, see section III.C of this preamble). The uniform percentage rule applies only to the employees who are offered coverage and does not require any particular employee or class of employees to be offered coverage.

B. Composite Billing and List Billing

The final regulations adopt the definitions of ''composite billing'' and ''list billing'' as used in the prior notices and the proposed regulations. Composite billing means a system of billing under which a health insurer charges a uniform premium for each of the employer's employees or charges a single aggregate premium for the group of covered employees that the employer may then divide by the number of covered employees to determine the uniform premium. In contrast, the term ''list billing'' is defined as a billing system under which a health insurer lists a separate premium for each employee based on the age of the employee or other factors.

C. Employers Offering One QHP

For an employer offering one QHP under a composite billing system with one level of employee-only coverage, the proposed regulations provided that the uniform percentage requirement is met if the eligible small employer pays the same amount for each employee enrolled in coverage and that amount is equal to at least 50 percent of the premium for employee-only coverage. If an employer is offering one QHP under a composite billing system with different tiers of coverage (for example, employee-only or family coverage) for which different premiums are charged, the uniform percentage requirement is satisfied if the eligible small employer either: (1) Pays the same amount for each employee enrolled in a particular tier of coverage and that amount is equal to at least 50 percent of the premium for that tier of coverage, or (2) pays an amount for each employee enrolled in a tier of coverage other than employee-only coverage that is the same for all employees and is no less than the amount that the employer would have contributed toward employee-only coverage for that employee (and is equal to at least 50 percent of the premium for employee-only coverage). The final regulations generally retain these provisions.

For an employer offering one QHP under a list billing system that offers only employee-only coverage, the uniform percentage requirement is satisfied if the eligible small employer either (1) pays an amount equal to a uniform percentage (not less than 50 percent) of the premium charged for each employee, or (2) determines an ''employer-computed composite rate'' and, if any employee contribution is required, each enrolled employee pays a uniform amount toward the employee-only premium that is no more than 50 percent of the employer-computed composite rate for employee-only coverage. The final regulations incorporate the definition of ''employer-computed composite rate'' from the proposed regulations as the average rate determined by adding the premiums for that tier of coverage for all employees eligible to participate in the employer's health insurance plan (whether or not the eligible employee enrolls in coverage under the plan or in that tier of coverage under the plan) and dividing by the total number of such eligible employees.

For an employer offering one QHP under a list billing system with at least one tier of coverage with a higher premium than employee-only coverage, the employer satisfies the requirement if it either (1) pays an amount for each employee covered under each tier of coverage equal to or exceeding the amount that the employer would have contributed for that employee for employee-only coverage, calculated either based upon the actual premium that the insurer would have charged for that employee-only coverage or the employer-computed composite rate for employee-only coverage; or (2) meets the requirements applicable to employers offering one QHP with only employee-only coverage and using list billing described in (1) but substituting the employer-computed composite rate for each tier of coverage for the employer-computed composite rate for employee-only coverage.

In addition to incorporating the rules stated in the proposed regulations, the final regulations clarify the rules for satisfying the uniform percentage requirement in circumstances in which employers elect to offer SHOP dependent coverage to employees through the SHOP Exchange. SHOP dependent coverage is coverage offered separately to any individual who is or may become eligible for coverage under the terms of a group health plan offered through SHOP because of a relationship to a participant-employee (including an employee's domestic partner or similar relation, such as a person with whom the employee has entered into a civil union), whether or not a dependent of the participant-employee under section 152 of the Code. SHOP dependent coverage is different than family coverage in that it provides coverage only to the employee's dependents based on allowable rating factors, and does not include the participant-employee. As coverage purchased that does not include the employee, SHOP dependent coverage is not taken into account for purposes of applying the uniformity requirement. Accordingly, regardless of whether composite or list billing is used, if an employer opts to provide SHOP dependent coverage to employees in addition to employee-only coverage, the final regulations provide that the employer does not fail to satisfy the uniform percentage requirement by contributing a different amount toward that SHOP dependent coverage than to either employee-only coverage or family coverage, even if that contribution is zero, or that contribution is different for dependents of different employees or groups of employees.[4] However, premiums paid for SHOP dependent coverage may be counted in determining the amount of the credit.

The final regulations provide examples of how the uniform percentage requirement is applied in these situations.

D. Employers Offering More Than One Plan

The final regulations generally adopt the rule set forth in the proposed regulations that if an employer offers more than one QHP through a SHOP Exchange, the uniform percentage requirement may be satisfied in one of two ways. The first is on a plan-by-plan basis, meaning that the employer's premium payments for each plan individually satisfy the uniform percentage requirement stated above. The amounts or percentages of premiums paid toward each QHP do not have to be the same, but they must each satisfy the uniform percentage

[4] Section 2716 of the Public Health Service Act, which is incorporated into the Code by section 9815 of the Code, applies nondiscrimination rules similar to section 105(h) to insured group health plans. Treasury and the IRS continue to develop the nondiscrimination rules under section 2716, and compliance with section 2716 will not be required until after regulations or other administrative guidance of general applicability has been issued. See Notice 2011–1 (2011–2 IRB). The uniformity rules differ from the provisions of section 2716 so that compliance with the uniformity rules may not necessarily mean that the arrangement also complies with the requirements of section 2716.

requirement if each QHP is tested separately. The other permissible method to satisfy the uniform percentage requirement is through the reference plan method. Under the reference plan method, the employer designates one of its QHPs as a reference plan. Then the employer determines a level of employer contributions for each employee such that, if all eligible employees enrolled in the reference plan, the contributions would satisfy the uniform percentage requirement as applied to that reference plan and the employer allows each employee to apply the amount of employer contribution determined necessary to meet the uniform percentage requirement toward the reference plan or toward coverage under any other available QHP.

E. Tobacco Surcharges and Wellness Programs

Tobacco usage is an allowable rating factor in the SHOP Exchange that may affect employee premiums. In addition, wellness programs resulting in a premium subsidy are becoming more common. The proposed regulations did not address the impact of a tobacco surcharge or wellness program on the uniform percentage requirement. The final regulations provide that a tobacco surcharge applicable to coverage acquired on a SHOP Exchange and amounts paid by the employer to cover the surcharge are not included in premiums for purposes of calculating the uniform percentage requirement, nor are payments of the surcharge treated as premium payments for purposes of the credit. The final regulations also provide that the uniform percentage requirement is applied without regard to employee payment of the tobacco surcharges in cases in which all or part of the employee tobacco surcharges are not paid by the employer.

The final regulations also address wellness programs implemented by the employer that affect the required employee contribution (and accordingly the employer contribution). For this purpose, a wellness program refers to a wellness program as defined for purposes of the regulations under the Health Insurance Portability and Accountability Act. See § 54.9802–1(f). Specifically the final regulations provide that, for purposes of meeting the uniform percentage requirement, any additional amount of the employer contribution attributable to an employee's participation in a wellness program over the employer contribution with respect to an employee that does not participate in the wellness program is not taken into account in calculating the uniform percentage requirement, whether the difference is due to a discount for participation or a surcharge for nonparticipation. The employer contributions for employees that do not participate in the wellness program must be at least 50 percent of the premium (including any premium surcharge for nonparticipation). However, for purposes of computing the credit, the employer contributions are taken into account, including those contributions attributable to an employee's participation in a wellness program.

F. Employers Complying With State Law

The Treasury Department and the IRS understand that at least one State requires employers to contribute a certain percentage (for example, 50 percent) to an employee's premium cost, but also requires that the employee's contribution not exceed a certain percentage of monthly gross earnings; as a result, in some instances, the employer's required contribution for a particular employee might exceed 50 percent of the premium. To satisfy the uniform percentage requirement under section 45R, the employer generally would be required to increase the employer contribution to all of its employees' premiums to match the increase for that one employee, which may be difficult, especially if the percentage increase is substantial. An employer will be treated as meeting the uniform percentage requirement if the failure to satisfy the uniform percentage requirement is attributable to additional employer contributions made to certain employees solely to comply with an applicable State or local law.

IV. Claiming the Credit

The proposed regulations prescribed rules for claiming the credit on the Form 8941, Credit for Small Employer Health Insurance Premiums, for reflecting the credit in estimated tax payments, and for offsetting an eligible small employer's AMT liability for the year. The proposed regulations also stated that no deduction is allowed under section 162 for that portion of the premiums paid equal to the amount of the credit claimed under section 45R. See section 280C(h). The final regulations retain these rules and provisions.

Effective/Applicability Dates

Section 1421(f), as amended by § 10105 of the Affordable Care Act, provides that section 45R applies to taxable years beginning after December 31, 2009; however, Notice 2014–6 provides transition relief for certain small employers that cannot offer a QHP through a SHOP Exchange for 2014.

These final regulations are effective on June 30, 2014. These final regulations are applicable for taxable years beginning after 2013. Alternatively, employers may rely on the provisions of the proposed regulations for taxable years beginning after 2013, and before 2015. For transition rules related to certain plan years beginning in 2014, see § 1.45R–3(i).

Availability of IRS Documents

IRS notices cited in this preamble are made available by the Superintendent of Documents, U.S. Government Printing Office, Washington, DC 20402.

Special Analyses

It has been determined that this Treasury decision is not a significant regulatory action as defined in Executive Order 12866, as supplemented by Executive Order 13563. Therefore, a regulatory assessment is not required. It has also been determined that section 553(b) of the Administrative Procedure Act (5 U.S.C. chapter 5) does not apply to these regulations, and because the regulations do not impose a collection of information on small entities, the Regulatory Flexibility Act (5 U.S.C. Chapter 6) does not apply.

It is hereby certified that this regulation will not have a significant economic impact on a substantial number of small entities. Accordingly, a regulatory flexibility analysis is not required. While the number of small entities affected is substantial, the economic impact on the affected small entities is not significant. The information required to determine a small employer's eligibility for, and amount of, an applicable credit, generally consisting of the annual hours worked by its employees, the annual wages paid to its employees, the cost of the employees' premiums for qualified health plans and the employer's contribution towards those premiums, is information that the small employer generally will retain for business purposes and that will be readily available to accumulate for purposes of completing the necessary form for claiming the credit. In addition, this credit is available to any eligible small employer only twice (because the credit can be claimed by a small employer only for two consecutive taxable years beginning after 2013, beginning with the taxable year for which the small employer first claims the credit). Accordingly, no small employer will calculate the credit amount or complete

the process for claiming the credit under this regulation more than twice.

Pursuant to section 7805(f) of the Code, the proposed regulations preceding these regulations were submitted to the Chief Counsel for Advocacy of the Small Business Administration for comments on its impact on small business. No comments were received.

Drafting Information

The principal author of these regulations is Stephanie Caden, Office of the Division Counsel/Associate Chief Counsel (Tax Exempt and Government Entities). However, other personnel from the IRS and the Treasury Department participated in their development.

List of Subjects 26 CFR Part 1

Income taxes, Reporting and recordkeeping requirements.

Adoption of Amendments to the Regulations

Accordingly, 26 CFR part 1 is amended as follows:

PART I—INCOME TAXES

■ **Paragraph 1.** The authority citation for part 1 continues to read in part as follows:

Authority: 26 U.S.C. 7805 * * *

■ **Par. 2.** Section 1.45R–0 is added to read as follows:

§ 1.45R–0 Table of contents.

This section lists the table of contents for §§ 1.45R–1 through 1.45R–5.

§ 1.45R–1 Definitions.

(a) Definitions.
(1) Average premium.
(2) Composite billing.
(3) Credit period.
(4) Eligible small employer.
(5) Employee.
(6) Employer-computed composite rate.
(7) Exchange.
(8) Family member.
(9) Full-time equivalent employee (FTE).
(10) List billing.
(11) Net premium payments.
(12) Nonelective contribution.
(13) Payroll taxes.
(14) Qualified health plan QHP.
(15) Qualifying arrangement.
(16) Seasonal worker.
(17) SHOP dependent coverage.
(18) Small Business Health Options Program (SHOP).
(19) State.
(20) Tax-exempt eligible small employer.
(21) Tier.
(22) Tobacco surcharge.
(23) United States.
(24) Wages.
(25) Wellness program.
(b) Effective/applicability date.

§ 1.45R–2 Eligibility for the credit.

(a) Eligible small employer.
(b) Application of section 414 employer aggregation rules.
(c) Employees taken into account.
(d) Determining the hours of service performed by employees.
(1) In general.
(2) Permissible methods.
(3) Examples.
(e) FTE calculation.
(1) In general.
(2) Example.
(f) Determining the employer's average annual wages.
(1) In general.
(2) Example.
(g) Effective/applicability date.

§ 1.45R–3 Calculating the credit.

(a) In general.
(b) Average premium limitation.
(1) In general.
(2) Examples.
(c) Credit phaseout.
(1) In general.
(2) $25,000 dollar amount adjusted for inflation.
(3) Examples
(d) State credits and subsidies for health insurance.
(1) Payments to employer.
(2) Payments to issuer.
(3) Credits may not exceed net premium payment.
(4) Examples.
(e) Payroll tax limitation for tax-exempt eligible small employers.
(1) In general.
(2) Example.
(f) Two-consecutive-taxable year credit period limitation.
(g) Premium payments by the employer for a taxable year.
(1) In general.
(2) Excluded amounts.
(h) Rules applicable to trusts, estates, regulated investment companies, real estate investment trusts and cooperative organizations.
(i) Transition rule for 2014.
(1) In general.
(2) Example.
(j) Effective/applicability date.

§ 1.45R–4 Uniform percentage of premium paid.

(a) In general.
(b) Employers offering one QHP.
(1) Employers offering one QHP, self-only coverage, composite billing.
(2) Employers offering one QHP, other tiers of coverage, composite billing.
(3) Employers offering one QHP, self-only coverage, list billing.
(4) Employers offering one QHP, other tiers of coverage, list billing.
(5) Employers offering SHOP dependent coverage.
(c) Employers offering more than one QHP.
(1) QHP-by-QHP method.
(2) Reference QHP method.
(d) Tobacco surcharges and wellness program discounts.
(i) Tobacco surcharges.
(ii) Wellness programs.
(e) Special rules regarding employer compliance with applicable State and local law.
(f) Examples.
(g) Effective/applicability date.

§ 1.45R–5 Claiming the credit.

(a) Claiming the credit.
(b) Estimated tax payments and alternative minimum tax (AMT) liability.
(c) Reduction of section 162 deduction.
(d) Effective/applicability date.

■ **Par. 2.** Sections 1.45R–1, 1.45R–2, 1.45R–3, 1.45R–4 and 1.45R–5 are added to read as follows:

§ 1.45R–1 Definitions.

(a) *Definitions.* The definitions in this section apply to this section and §§ 1.45R–2, 1.45R–3, 1.45R–4, and 1.45R–5.

(1) *Average premium.* The term *average premium* means an average premium for the small group market in the rating area in which the employee enrolls for coverage. The average premium for the small group market in a rating area is determined by the Secretary of Health and Human Services.

(2) *Composite billing.* The term *composite billing* means a system of billing under which a health insurer charges a uniform premium for each of the employer's employees or charges a single aggregate premium for the group of covered employees that the employer then divides by the number of covered employees to determine the uniform premium.

(3) *Credit period*—(i) *In general.* The term *credit period* means, with respect to any eligible small employer (or any predecessor employer), the two-consecutive-taxable-year period beginning with the first taxable year beginning after 2013, for which the eligible small employer files an income tax return with an attached Form 8941, ''Credit for Small Employer Health Insurance Premiums'' (or files a Form 990–T, ''Exempt Organization Business Income Tax Return,'' with an attached

Form 8941 in the case of a tax-exempt eligible employer). For a transition rule for 2014, see § 1.45R–3(i).

(ii) *Examples.* The following examples illustrate the provisions of paragraph (a)(3)(i) of this section:

Example 1. (i) *Facts.* In 2014, an eligible small employer (Employer) that uses a calendar year as its taxable year begins to offer insurance through a SHOP Exchange. Employer has 4 employees and otherwise qualifies for the credit, but none of the employees enroll in the coverage offered by Employer through the SHOP Exchange. In mid-2015, the 4 employees enroll for coverage through the SHOP Exchange but Employer does not file Form 8941 or claim the credit. In 2016, Employer has 20 employees and all are enrolled in coverage offered through the SHOP Exchange. Employer files Form 8941 with Employer's 2016 tax return to claim the credit.

(ii) *Conclusion.* Employer's taxable year 2016 is the first year of the credit period. Accordingly, Employer's two-year credit period is 2016 and 2017.

Example 2. (i) *Facts.* Same facts as *Example 1,* but Employer files Form 8941 with Employer's 2015 tax return.

(ii) *Conclusion.* Employer's taxable year 2015 is the first year of the credit period. Accordingly, Employer's two-year credit period is 2015 and 2016 (and does not include 2017). Employer is entitled to a credit based on a partial year of SHOP Exchange coverage for Employer's taxable year 2015.

(4) *Eligible small employer.* (i) The term *eligible small employer* means an employer that meets the requirements set forth in § 1.45R–2.

(ii) For the definition of tax-exempt eligible small employer, see paragraph (a)(19) of this section.

(iii) A farmers' cooperative described under section 521 that is subject to tax pursuant to section 1381, and otherwise meets the requirements of this paragraph (a)(4) and § 1.45R–2, is an eligible small employer.

(5) *Employee*—(i) *In general.* Except as otherwise specifically provided in this paragraph (a)(5), the term *employee* means an individual who is an employee of the eligible small employer under the common law standard. See § 31.3121(d)–1(c).

(ii) *Leased employees.* For purposes of this paragraph (a)(5), the term *employee* also includes a leased employee (as defined in section 414(n)).

(iii) *Certain individuals excluded.* The term *employee* does not include independent contractors (including sole proprietors), partners in a partnership, shareholders owning more than two percent of an S corporation, and any owners of more than five percent of other businesses. The term *employee* also does not include family members of these owners and partners, including the employee-spouse of a shareholder owning more than two percent of the stock of an S corporation, the employee-spouse of an owner of more than five percent of a business, the employee-spouse of a partner owning more than a five percent interest in a partnership, and the employee-spouse of a sole proprietor, or any other member of the household of these owners and partners who qualifies as a dependent under section 152(d)(2)(H).

(iv) *Seasonal workers.* The term *employee* does not include seasonal workers unless the seasonal worker provides services to the employer on more than 120 days during the taxable year.

(v) *Ministers.* Whether a minister is an employee is determined under the common law standard for determining worker status. If, under the common law standard, a minister is not an employee, the minister is not an employee for purposes of this paragraph (a)(5) and is not taken into account in determining an employer's FTEs, and premiums paid for the minister's health insurance coverage are not taken into account in computing the credit. If, under the common law standard, a minister is an employee, the minister is an employee for purposes of this paragraph (a)(5), and is taken into account in determining an employer's FTEs, and premiums paid by the employer for the minister's health insurance coverage can be taken into account in computing the credit. Because the performance of services by a minister in the exercise of his or her ministry is not treated as employment for purposes of the Federal Insurance Contributions Act (FICA), compensation paid to the minister is not wages as defined under section 3121(a), and is not counted as wages for purposes of computing an employer's average annual wages.

(vi) *Former employees.* Premiums paid on behalf of a former employee with no hours of service may be treated as paid on behalf of an employee for purposes of calculating the credit (see § 1.45R–3) provided that, if so treated, the former employee is also treated as an employee for purposes of the uniform percentage requirement (see § 1.45R–4). For the treatment of terminated employees for purposes of determining employer eligibility for the credit, see § 1.45R–2(c).

(6) *Employer-computed composite rate.* The term *employer-computed composite rate* refers to a rate for a tier of coverage (such as employee-only, dependent or family) of a QHP that is the average rate determined by adding the premiums for that tier of coverage for all employees eligible to participate in the QHP (whether or not they actually receive coverage under the plan or under that tier of coverage) and dividing by the total number of such eligible employees. The employer-computed composite rate may be used in list billing to convert individual premiums for a tier of coverage into an employer-computed composite rate for that tier of coverage. See § 1.45R–4(b)(3).

(7) *Exchange.* The term *Exchange* means an exchange as defined in 45 CFR 155.20.

(8) *Family member.* The term *family member* is defined with respect to a taxpayer as a child (or descendant of a child); a sibling or step-sibling; a parent (or ancestor of a parent); a step-parent; a niece or nephew; an aunt or uncle; or a son-in-law, daughter-in-law, father-in-law, mother-in-law, brother-in-law or sister-in-law. A spouse of any of these family members is also considered a family member.

(9) *Full-time equivalent employee (FTE).* The number of *full-time equivalent employees (FTEs)* is determined by dividing the total number of hours of service for which wages were paid by the employer to employees during the taxable year by 2,080. See § 1.45R–2(d) and (e) for permissible methods of calculating hours of service and the method for calculating the number of an employer's FTEs.

(10) *List billing.* The term *list billing* refers to a system of billing under which a health insurer lists a separate premium for each employee based on the age of the employee or other factors.

(11) *Net premium payments.* The term *net premium payments* means, in the case of an employer receiving a State tax credit or State subsidy for providing health insurance to its employees, the excess of the employer's actual premium payments over the State tax credit or State subsidy received by the employer. In the case of a State payment directly to an insurance company (or another entity licensed under State law to engage in the business of insurance), the employer's net premium payments are the employer's actual premium payments. If a State-administered program (such as Medicaid or another program that makes payments directly to a health care provider or insurance company on behalf of individuals and their families who meet certain eligibility guidelines) makes payments that are not contingent on the maintenance of an employer-provided group health plan, those payments are not taken into account in determining the employer's net premium payments.

(12) *Nonelective contribution.* The term *nonelective contribution* means an

employer contribution other than a contribution pursuant to a salary reduction arrangement under section 125.

(13) *Payroll taxes.* For purposes of section 45R, the term *payroll taxes* means amounts required to be withheld as tax from the employees of a tax-exempt eligible small employer under section 3402, amounts required to be withheld from such employees under section 3101(b), and amounts of tax imposed on the tax-exempt eligible small employer under section 3111(b).

(14) *Qualified health plan or QHP.* The term *qualified health plan* or the term *QHP* means a qualified health plan as defined in Affordable Care Act section 1301(a) (see 42 U.S.C. 18021(a)), but does not include a catastrophic plan described in Affordable Care Act section 1302(e) (see 42 U.S.C. 18022(e)).

(15) *Qualifying arrangement.* The term *qualifying arrangement* means an arrangement that requires an eligible small employer to make a nonelective contribution on behalf of each employee who enrolls in a QHP offered to employees by the employer through a SHOP Exchange in an amount equal to a uniform percentage (not less than 50 percent) of the premium cost of the QHP.

(16) *Seasonal worker.* The term *seasonal worker* means a worker who performs labor or services on a seasonal basis as defined by the Secretary of Labor, including (but not limited to) workers covered by 29 CFR 500.20(s)(1), and retail workers employed exclusively during holiday seasons. Employers may apply a reasonable, good faith interpretation of the term seasonal worker and a reasonable good faith interpretation of 29 CFR 500.20(s)(1) (including as applied by analogy to workers and employment positions not otherwise covered under 29 CFR 500.20(s)(1)).

(17) *SHOP dependent coverage.* The term *SHOP dependent coverage* refers to coverage offered through SHOP separately to any individual who is or may become eligible for coverage under the terms of a group health plan offered through SHOP because of a relationship to a participant-employee, whether or not a dependent of the participant-employee under section 152 of the Internal Revenue Code. The term *SHOP dependent coverage* does not include coverage such as family coverage, which includes coverage of the participant-employee.

(18) *Small Business Health Options Program (SHOP).* The term *Small Business Health Options Program (SHOP)* means an Exchange established pursuant to section 1311 of the Affordable Care Act and defined in 45 CFR 155.20.

(19) *State.* The term *State* means a State as defined in section 7701(a)(10), including the District of Columbia.

(20) *Tax-exempt eligible small employer.* The term *tax-exempt eligible small employer* means an eligible small employer that is exempt from federal income tax under section 501(a) as an organization described in section 501(c).

(21) *Tier.* The term *tier* refers to a category of coverage under a benefits package that varies only by the number of individuals covered. For example, employee-only coverage, dependent coverage, and family coverage would constitute three separate tiers of coverage.

(22) *Tobacco surcharge.* The term *tobacco surcharge* means any allowable differential that is charged for insurance in the SHOP Exchange that is attributable to tobacco use as the term tobacco use is defined in 45 CFR 147.102(a)(1)(iv).

(23) *United States.* The term *United States* means United States as defined in section 7701(a)(9).

(24) *Wages.* The term *wages* for purposes of section 45R means wages as defined under section 3121(a) for purposes of the Federal Insurance Contributions Act (FICA), determined without regard to the social security wage base limitation under section 3121(a)(1).

(25) *Wellness program.* The term *wellness program* for purposes of section 45R means a program of health promotion or disease prevention subject to the requirements of § 54.9802–1(f).

(b) *Effective/applicability date.* This section is applicable for periods after 2013. For rules relating to certain plan years beginning in 2014, see § 1.45R–3(i).

§ 1.45R–2 Eligibility for the credit.

(a) *Eligible small employer.* To be eligible for the credit under section 45R, an employer must be an eligible small employer. In order to be an eligible small employer, with respect to any taxable year, an employer must have no more than 25 full-time equivalent employees (FTEs), must have in effect a qualifying arrangement, and the average annual wages of the employer's FTEs must not exceed an amount equal to twice the dollar amount in effect under § 1.45R–3(c)(2). For purposes of eligibility for the credit for taxable years beginning in or after 2014, a qualifying arrangement is an arrangement that requires an employer to make a nonelective contribution on behalf of each employee who enrolls in a qualified health plan (QHP) offered to employees through a small business health options program (SHOP) Exchange in an amount equal to a uniform percentage (not less than 50 percent) of the premium cost of the QHP. Notwithstanding the foregoing, an employer that is an agency or instrumentality of the federal government, or of a State, local or Indian tribal government, is not an eligible small employer if it is not an organization described in section 501(c) that is exempt from tax under section 501(a). An employer does not fail to be an eligible small employer merely because its employees are not performing services in a trade or business of the employer. An employer located outside the United States (including an employer located in a U.S. territory) must have income effectively connected with the conduct of a trade or business in the United States, and otherwise meet the requirements of this section, to be an eligible small employer. For eligibility standards for SHOP related to foreign employers, see 45 CFR 155.710. Paragraphs (b) through (f) of this section provide the rules for determining whether the requirements to be an eligible small employer are met, including rules related to identifying and counting the number of the employer's FTEs, counting the employees' hours of service, and determining the employer's average annual FTE wages for the taxable year. For rules on determining whether the uniform percentage requirement is met, see § 1.45R–4.

(b) *Application of section 414 employer aggregation rules.* All employers treated as a single employer under section 414(b), (c), (m) or (o) are treated as a single employer for purposes of this section. Thus, all employees of a controlled group under section 414(b), (c) or (o), or an affiliated service group under section 414(m), are taken into account in determining whether any member of the controlled group or affiliated service group is an eligible small employer. Similarly, all wages paid to, and premiums paid for, employees by the members of the controlled group or affiliated service group are taken into account when determining the amount of the credit for a group treated as a single employer under these rules.

(c) *Employees taken into account.* To be eligible for the credit, an employer must have employees as defined in § 1.45R–1(a)(5) during the taxable year. All such employees of the eligible small employer are taken into account for purposes of determining the employer's FTEs and average annual FTE wages. Employees include employees who

terminate employment during the year for which the credit is being claimed, employees covered under a collective bargaining agreement, and employees who do not enroll in a QHP offered by the employer through a SHOP Exchange.

(d) *Determining the hours of service performed by employees*—(1) *In general.* An employee's hours of service for a year include each hour for which an employee is paid, or entitled to payment, for the performance of duties for the employer during the employer's taxable year. It also includes each hour for which an employee is paid, or entitled to payment, by the employer on account of a period of time during which no duties are performed due to vacation, holiday, illness, incapacity (including disability), layoff, jury duty, military duty or leave of absence (except that no more than 160 hours of service are required to be counted for an employee on account of any single continuous period during which the employee performs no duties).

(2) *Permissible methods.* In calculating the total number of hours of service that must be taken into account for an employee during the taxable year, eligible small employers need not use the same method for all employees, and may apply different methods for different classifications of employees if the classifications are reasonable and consistently applied. Eligible small employers may change the method for calculating employees' hours of service for each taxable year. An eligible small employer may use any of the following three methods.

(i) *Actual hours worked.* An employer may use the actual hours of service provided by employees including hours worked and any other hours for which payment is made or due (as described in paragraph (d)(1) of this section).

(ii) *Days-worked equivalency.* An employer may use a days-worked equivalency whereby the employee is credited with 8 hours of service for each day for which the employee would be required to be credited with at least one hour of service under paragraph (d)(1) of this section.

(iii) *Weeks-worked equivalency.* An employer may use a weeks-worked equivalency whereby the employee is credited with 40 hours of service for each week for which the employee would be required to be credited with at least one hour of service under paragraph (d)(1) of this section.

(3) *Examples.* The following examples illustrate the rules of paragraph (d) of this section:

Example 1. Counting hours of service by hours actually worked or for which payment is made or due. (i) *Facts.* An eligible small employer (Employer) has payroll records that indicate that Employee A worked 2,000 hours and that Employer paid Employee A for an additional 80 hours on account of vacation, holiday and illness. Employer uses the actual hours worked method described in paragraph (d)(2)(i) of this section.

(ii) *Conclusion.* Under this method of counting hours, Employee A must be credited with 2,080 hours of service (2,000 hours worked and 80 hours for which payment was made or due).

Example 2. Counting hours of service under days-worked equivalency. (i) *Facts.* Employee B worked from 8:00 am to 12:00 pm every day for 200 days. Employer uses the days-worked equivalency method described in paragraph (d)(2)(ii) of this section.

(ii) *Conclusion.* Under this method of counting hours, Employee B must be credited with 1,600 hours of service (8 hours for each day Employee B would otherwise be credited with at least 1 hour of service × 200 days).

Example 3. Counting hours of service under weeks-worked equivalency. (i) *Facts.* Employee C worked 49 weeks, took 2 weeks of vacation with pay, and took 1 week of leave without pay. Employer uses the weeks-worked equivalency method described in paragraph (d)(2)(iii) of this section.

(ii) *Conclusion.* Under this method of counting hours, Employee C must be credited with 2,040 hours of service (40 hours for each week during which Employee C would otherwise be credited with at least 1 hour of service × 51 weeks).

Example 4. Excluded employees. (i) *Facts.* Employee D worked 3 consecutive weeks at 32 hours per week during the holiday season. Employee D did not work during the remainder of the year. Employee E worked limited hours after school from time to time through the year for a total of 350 hours. Employee E does not work through the summer. Employer uses the actual hours worked method described in paragraph (d)(2)(i) of this section.

(ii) *Conclusion.* Employee D is a seasonal employee who worked for 120 days or less for Employer during the year. Employee D's hours are not counted when determining the hours of service of Employer's employees. Employee E works throughout most of the year and is not a seasonal employee. Employer counts Employee E's 350 hours of service during the year.

(e) *FTE Calculation*—(1) *In general.* The number of an employer's FTEs is determined by dividing the total hours of service, determined in accordance with paragraph (d) of this section, credited during the year to employees taken into account under paragraph (c) of this section (but not more than 2,080 hours for any employee) by 2,080. The result, if not a whole number, is then rounded to the next lowest whole number. If, however, after dividing the total hours of service by 2,080, the resulting number is less than one, the employer rounds up to one FTE.

(2) *Example.* The following example illustrates the provisions of paragraph (e) of this section:

Example. Determining the number of FTEs. (i) *Facts.* A sole proprietor pays 5 employees wages for 2,080 hours each, pays 3 employees wages for 1,040 hours each, and pays 1 employee wages for 2,300 hours. One of the employees working 2,080 hours is the sole proprietor's nephew. The sole proprietor's FTEs would be calculated as follows: 8,320 hours of service for the 4 employees paid for 2,080 hours each (4 × 2,080); the sole proprietor's nephew is excluded from the FTE calculation; 3,120 hours of service for the 3 employees paid for 1,040 hours each (3 × 1,040); and 2,080 hours of service for the 1 employee paid for 2,300 hours (lesser of 2,300 and 2,080). The sum of the included hours of service equals 13,520 hours of service.

(ii) *Conclusion.* The sole proprietor's FTEs equal 6 (13,520 divided by 2,080 = 6.5, rounded to the next lowest whole number).

(f) *Determining the employer's average annual FTE wages*—(1) *In general.* All wages paid to employees (including overtime pay) are taken into account in computing an eligible small employer's average annual FTE wages. The average annual wages paid by an employer for a taxable year is determined by dividing the total wages paid by the eligible small employer during the employer's taxable year to employees taken into account under paragraph (c) of this section by the number of the employer's FTEs for the year. The result is then rounded down to the nearest $1,000 (if not otherwise a multiple of $1,000). For purposes of determining the employer's average annual wages for the taxable year, only wages that are paid for hours of service determined under paragraph (d) of this section are taken into account.

(2) *Example.* The following example illustrates the provision of paragraphs (e) and (f) of this section:

Example. (i) *Facts.* An employer has 26 FTEs with average annual wages of $23,000. Only 22 of the employer's employees enroll for coverage offered by the employer through a SHOP Exchange.

(ii) *Conclusion.* The hours of service and wages of all employees are taken into consideration in determining whether the employer is an eligible small employer for purposes of the credit. Because the employer does not have fewer than 25 FTEs for the taxable year, the employer is not an eligible small employer for purposes of this section, even if fewer than 25 employees (or FTEs) enroll for coverage through the SHOP Exchange.

(g) *Effective/applicability date.* This section is applicable for periods after 2013. For transition rules relating to certain plan years beginning in 2014, see § 1.45R–3(i).

§ 1.45R–3 Calculating the credit.

(a) *In general.* The tax credit available to an eligible small employer equals 50 percent of the eligible small employer's premium payments made on behalf of its employees under a qualifying arrangement, or in the case of a tax-exempt eligible small employer, 35 percent of the employer's premium payments made on behalf of its employees under a qualifying arrangement. The employer's tax credit is subject to the following adjustments and limitations:

(1) The average premium limitation for the small group market in the rating area in which the employee enrolls for coverage, described in paragraph (b) of this section;

(2) The credit phaseout described in paragraph (c) of this section;

(3) The net premium payment limitation in the case of State credits or subsidies described in paragraph (d) of this section;

(4) The payroll tax limitation for a tax-exempt eligible small employer described in paragraph (e) of this section;

(5) The two-consecutive-taxable year-credit period limitation, described in paragraph (f) of this section;

(6) The rules with respect to the premium payments taken into account, described in paragraph (g) of this section;

(7) The rules with respect to credits applicable to trusts, estates, regulated investment companies, real estate investment trusts and cooperatives described in paragraph (h) of this section; and

(8) The transition relief for 2014 described in paragraph (i) of this section.

(b) *Average premium limitation*—(1) *In general.* The amount of an eligible small employer's premium payments that is taken into account in calculating the credit is limited to the premium payments the employer would have made under the same arrangement if the average premium for the small group market in the rating area in which the employee enrolls for coverage were substituted for the actual premium.

(2) *Examples.* The following examples illustrate the provisions of paragraph (b)(1) of this section:

Example 1. Comparing premium payments to average premium for small group market. (i) *Facts.* An eligible small employer (Employer) offers a health insurance plan with employee-only and SHOP dependent coverage through a small business options program (SHOP) Exchange. Employer has 9 full-time equivalent employees (FTEs) with average annual wages of $23,000 per FTE. All 9 employees are employees as defined under § 1.45R–1(a)(5). Six employees are enrolled in employee-only coverage and 5 of these 6 employees have also enrolled either one child or one spouse in SHOP dependent coverage. Employer pays 50% of the premiums for all employees enrolled in employee-only coverage and 50% of the premiums for all employees who enrolled family members in SHOP dependent coverage (and the employee is responsible for the remainder in each case). The premiums are $4,000 a year for employee-only coverage and $3,000 a year for each individual enrolled in SHOP dependent coverage. The average premium for the small group market in Employer's rating area is $5,000 for employee-only coverage and $4,000 for each individual enrolled in SHOP dependent coverage. Employer's premium payments for each FTE ($2,000 for employee-only coverage and $1,500 for SHOP dependent coverage) do not exceed 50 percent of the average premium for the small group market in Employer's rating area ($2,500 for employee-only coverage and $2,000 for each individual enrolled in SHOP dependent coverage).

(ii) *Conclusion.* The amount of premiums paid by Employer for purposes of computing the credit equals $19,500 ((6 × $2,000) plus (5 × $1,500)).

Example 2. Premium payments exceeding average premium for small group market. (i) *Facts.* Same facts as *Example* 1, except that the premiums are $6,000 for employee-only coverage and $5,000 for each dependent enrolled in coverage. Employer's premium payments for each employee ($3,000 for employee-only coverage and $2,500 for SHOP dependent coverage) exceed 50% of the average premium for the small group market in Employer's rating area ($2,500 for self-only coverage and $2,000 for family coverage).

(ii) *Conclusion.* The amount of premiums paid by Employer for purposes of computing the credit equals $25,000 ((6 × $2,500) plus (5 × $2,000)).

(c) *Credit phaseout*—(1) *In general.* The tax credit is subject to a reduction (but not reduced below zero) if the employer's FTEs exceed 10 or average annual FTE wages exceed $25,000. If the number of FTEs exceeds 10, the reduction is determined by multiplying the otherwise applicable credit amount by a fraction, the numerator of which is the number of FTEs in excess of 10 and the denominator of which is 15. If average annual FTE wages exceed $25,000, the reduction is determined by multiplying the otherwise applicable credit amount by a fraction, the numerator of which is the amount by which average annual FTE wages exceed $25,000 and the denominator of which is $25,000. In both cases, the result of the calculation is subtracted from the otherwise applicable credit to determine the credit to which the employer is entitled. For an employer with both more than 10 FTEs and average annual FTE wages exceeding $25,000, the total reduction is the sum of the two reductions.

(2) *$25,000 dollar amount adjusted for inflation.* For taxable years beginning in a calendar year after 2013, each reference to ''$25,000'' in paragraph (c)(1) of this section is replaced with a dollar amount equal to $25,000 multiplied by the cost-of-living adjustment under section 1(f)(3) for the calendar year, determined by substituting ''calendar year 2012'' for ''calendar year 1992'' in section 1(f)(3)(B).

(3) *Examples.* The following examples illustrate the provisions of paragraph (c) this section. For purposes of these examples, no employer is a tax-exempt organization and no other adjustments or limitations on the credit apply other than those adjustments and limitations explicitly set forth in the example.

Example 1. Calculating the maximum credit for an eligible small employer without an applicable credit phaseout. (i) *Facts.* An eligible small employer (Employer) has 9 FTEs with average annual wages of $23,000. Employer pays $72,000 in health insurance premiums for those employees (which does not exceed the total average premium for the small group market in the rating area), and otherwise meets the requirements for the credit.

(ii) *Conclusion.* Employer's credit equals $36,000 (50% × $72,000).

Example 2. Calculating the credit phaseout if the number of FTEs exceeds 10 or average annual wages exceed $25,000, as adjusted for inflation. (i) *Facts.* An eligible small employer (Employer) has 12 FTEs and average annual FTE wages of $30,000 in a year when the amount in paragraph (c)(1) of this section, as adjusted for inflation, is $25,000. Employer pays $96,000 in health insurance premiums for its employees (which does not exceed the average premium for the small group market in the rating area) and otherwise meets the requirements for the credit.

(ii) *Conclusion.* The initial amount of the credit is determined before any reduction (50% × $96,000) = $48,000. The credit reduction for FTEs in excess of 10 is $6,400 ($48,000 × 2/15). The credit reduction for average annual FTE wages in excess of $25,000 is $9,600 ($48,000 x $5,000/$25,000), resulting in a total credit reduction of $16,000 ($6,400 + $9,600). Employer's total tax credit equals $32,000 ($48,000 − $16,000).

(d) *State credits and subsidies for health insurance*—(1) *Payments to employer.* If the employer is entitled to a State tax credit or a premium subsidy that is paid directly to the employer, the premium payment made by the employer is not reduced by the credit or subsidy for purposes of determining whether the employer has satisfied the requirement to pay an amount equal to a uniform percentage (not less than 50 percent) of the premium cost. Also, except as described in paragraph (d)(3)

of this section, the maximum amount of the credit is not reduced by reason of a State tax credit or subsidy or by reason of payments by a State directly to an employer.

(2) *Payments to issuer.* If a State makes payments directly to an insurance company (or another entity licensed under State law to engage in the business of insurance) to pay a portion of the premium for coverage of an employee enrolled for coverage through a SHOP Exchange, the State is treated as making these payments on behalf of the employer for purposes of determining whether the employer has satisfied the requirement to pay an amount equal to a uniform percentage (not less than 50 percent) of the premium cost of coverage. Also, except as described below in paragraph (d)(3) of this section, these premium payments by the State are treated as an employer contribution under this section for purposes of calculating the credit.

(3) *Credits may not exceed net premium payment.* Regardless of the application of paragraphs (d)(1) and (2) of this section, in no event may the amount of the credit exceed the amount of the employer's net premium payments as defined in § 1.45R–1(a)(11).

(4) *Examples.* The following examples illustrate the provisions of paragraphs (d)(1) through (3) of this section. For purposes of these examples, each employer is an eligible small employer that is not a tax-exempt organization and the eligible small employer's taxable year and plan year begin during or after 2014. No other adjustments or limitations on the credit apply other than those adjustments and limitations explicitly set forth in the example.

Example 1. State premium subsidy paid directly to employer. (i) *Facts.* The State in which an eligible small employer (Employer) operates provides a health insurance premium subsidy of up to 40% of the health insurance premiums for each eligible employee. The State pays the subsidy directly to Employer. Employer has one employee, Employee D. Employee D's health insurance premiums are $100 per month and are paid as follows: $80 by Employer and $20 by Employee D through salary reductions to a cafeteria plan. The State pays Employer $40 per month as a subsidy for Employer's payment of insurance premiums on behalf of Employee D. Employer is otherwise an eligible small employer that meets the requirements for the credit.

(ii) *Conclusion.* For purposes of calculating the credit, the amount of premiums paid by the employer is $80 per month (the premium payment by the Employer without regard to the subsidy from the State). The maximum credit is $40 ($80 × 50%).

Example 2. State premium subsidy paid directly to insurance company. (i) *Facts.* The State in which Employer operates provides a health insurance premium subsidy of up to 30% for each eligible employee. Employer has one employee, Employee E. Employee E is enrolled in employee-only coverage through a qualified health plan (QHP) offered by Employer through a SHOP Exchange. Employee E's health insurance premiums are $100 per month and are paid as follows: $50 by Employer; $30 by the State and $20 by the employee. The State pays the $30 per month directly to the insurance company and the insurance company bills Employer for the employer and employee's share, which equal $70 per month. Employer is otherwise an eligible small employer that meets the requirements for the credit.

(ii) *Conclusion.* For purposes of calculating the amount of the credit, the amount of premiums paid by Employer is $80 per month (the sum of Employer's payment and the State's payment). The maximum credit is $40 ($80 × 50%).

Example 3. Credit limited by employer's net premium payment. (i) *Facts.* The State in which Employer operates provides a health insurance premium subsidy of up to 50% for each eligible employee. Employer has one employee, Employee F. Employee F is enrolled in employee-only coverage under the QHP offered to Employee F by Employer through a SHOP Exchange. Employee F's health insurance premiums are $100 per month and are paid as follows: $20 by Employer; $50 by the State and $30 by Employee F. The State pays the $50 per month directly to the insurance company and the insurance company bills Employer for the employer's and employee's shares, which total $50 per month. The amount of premiums paid by Employer (the sum of Employer's payment and the State's payment) is $70 per month, which is more than 50% of the $100 monthly premium payment. The amount of the premium for calculating the credit is also $70 per month.

(ii) *Conclusion.* The maximum credit without adjustments or limitations is $35 ($70 x 50%). Employer's net premium payment is $20 (the amount actually paid by Employer excluding the State subsidy). Because the credit may not exceed Employer's net premium payment, the credit is $20 (the lesser of $35 or $20).

(e) *Payroll tax limitation for tax-exempt eligible small employers*—(1) *In general.* For a tax-exempt eligible employer, the amount of the credit claimed cannot exceed the total amount of payroll taxes (as defined in § 1.45R–1(a)(13)) of the employer during the calendar year in which the taxable year begins.

(2) *Example.* The following example illustrates the provisions of paragraph (e)(1) of this section. For purposes of this example, the eligible small employer's taxable year and plan year begin during or after 2014. No other adjustments or limitations on the credit apply other than those adjustments and limitations explicitly set forth in the example.

Example. Calculating the maximum credit for a tax-exempt eligible small employer. (i) *Facts.* Employer is a tax-exempt eligible small employer that has 10 FTEs with average annual wages of $21,000. Employer pays $80,000 in health insurance premiums for its employees (which does not exceed the average premium for the small group market in the rating area) and otherwise meets the requirements for the credit. The total amount of Employer's payroll taxes equals $30,000.

(ii) *Conclusion.* The initial amount of the credit is determined before any reduction: (35% × $80,000) = $28,000, and Employer's payroll taxes are $30,000. The total tax credit equals $28,000 (the lesser of $28,000 and $30,000).

(f) *Two-consecutive-taxable-year credit period limitation.* The credit is available to an eligible small employer, including a tax-exempt eligible small employer, only during that employer's credit period. For a transition rule for 2014, see paragraph (i) of this section. To prevent the avoidance of the two-year limit on the credit period through the use of successor entities, a successor entity and a predecessor entity are treated as the same employer. For this purpose, the rules for identifying successor entities under § 31.3121(a)(1)–1(b) apply. Accordingly, for example, if an eligible small employer claims the credit for the 2014 and 2015 taxable years, that eligible small employer's credit period will have expired so that any successor employer to that eligible small employer will not be able to claim the credit for any subsequent taxable years.

(g) *Premium payments by the employer for a taxable year*—(1) *In general.* Only premiums paid by an eligible small employer or tax-exempt eligible small employer on behalf of each employee enrolled in a QHP or payments paid to the issuer in accordance with paragraph (d)(2) of this section are counted in calculating the credit. If an eligible small employer pays only a portion of the premiums for the coverage provided to employees (with employees paying the rest), only the portion paid by the employer is taken into account. Premiums paid on behalf of seasonal workers may be counted in determining the amount of the credit (even though seasonal worker wages and hours of service are not included in the FTE calculation and average annual FTE wage calculation unless the seasonal worker works for the employer on more than 120 days during the taxable year). Subject to the average premium limitation, premiums paid on behalf of an employee with respect to any individuals who are or may become eligible for coverage under the terms of the plan because of a relationship to the employee (including through family coverage or SHOP dependent coverage) may also be taken into account in

determining the amount of the credit. (However, premiums paid for SHOP dependent coverage are not taken into account in determining whether the uniform percentage requirement is met, see § 1.45R–4(b)(5).)

(2) *Excluded amounts*—(i) *Salary reduction amounts.* Any premium paid pursuant to a salary reduction arrangement under a section 125 cafeteria plan is not treated as paid by the employer for purposes of section 45R and these regulations. For this purpose, premiums paid with employer-provided flex credits that employees may elect to receive as cash or other taxable benefits are treated as paid pursuant to a salary reduction arrangement under a section 125 cafeteria plan.

(ii) *HSAs, HRAs, and FSAs.* Employer contributions to, or amounts made available under, health savings accounts, reimbursement arrangements, and health flexible spending arrangements are not taken into account in determining the premium payments by the employer for a taxable year.

(h) *Rules applicable to trusts, estates, regulated investment companies, real estate investment trusts and cooperative organizations.* Rules similar to the rules of section 52(d) and (e) and the regulations thereunder apply in calculating and apportioning the credit with respect to a trust, estate, a regulated investment company or real estate investment trusts or cooperative organization.

(i) *Transition rule for 2014*—(1) *In general.* This paragraph (i) applies if as of August 26, 2013, an eligible small employer offers coverage for a health plan year that begins on a date other than the first day of its taxable year. In such a case, if the eligible small employer has a health plan year beginning after January 1, 2014 but before January 1, 2015 (2014 health plan year) that begins after the start of its first taxable year beginning on or after January 1, 2014 (2014 taxable year), and the employer offers one or more QHPs to its employees through a SHOP Exchange as of the first day of its 2014 health plan year, then the eligible small employer is treated as offering coverage through a SHOP Exchange for its entire 2014 taxable year for purposes of section 45R if the health care coverage provided from the first day of the 2014 taxable year through the day immediately preceding the first day of the 2014 health plan year would have qualified for a credit under section 45R using the rules applicable to taxable years beginning before January 1, 2014. If the eligible small employer claims the section 45R credit in the 2014 taxable year, the 2014 taxable year begins the first year of the credit period.

(2) *Example.* The following example illustrates the rule of this paragraph (i) of this section. For purposes of this example, it is assumed that the eligible small employer is not a tax-exempt organization and that no other adjustments or limitations on the credit apply other than those adjustments and limitations explicitly set forth in the example.

Example. (i) *Facts.* An eligible small employer (Employer) has a 2014 taxable year that begins January 1, 2014 and ends on December 31, 2014. As of August 26, 2013, Employer had a 2014 health plan year that begins July 1, 2014 and ends June 30, 2015. Employer offers a QHP through a SHOP Exchange the coverage under which begins July 1, 2014. Employer also provides other coverage from January 1, 2014 through June 30, 2014 that would have qualified for a credit under section 45R based on the rules applicable to taxable years beginning before 2014.

(ii) *Conclusion.* Employer may claim the credit at the 50% rate under section 45R for the entire 2014 taxable year using the rules under this paragraph (i) of this section. Accordingly, in calculating the credit, Employer may count premiums paid for the coverage from January 1, 2014 through June 30, 2014, as well as premiums paid for the coverage from July 1, 2014 through December 31, 2014. If Employer claims the credit for the 2014 taxable year, that taxable year is the first year of the credit period.

(j) *Effective/applicability date.* This section is applicable for periods after 2013. For transition rules relating to certain plan years beginning in 2014, see paragraph (i) of this section.

§ 1.45R–4 Uniform percentage of premium paid.

(a) *In general.* An eligible small employer must pay a uniform percentage (not less than 50 percent) of the premium for each employee enrolled in a qualified health plan (QHP) offered to employees by the employer through a small business health options program (SHOP) Exchange.

(b) *Employers offering one QHP.* An employer that offers a single QHP through a SHOP Exchange must satisfy the requirements of this paragraph (b).

(1) *Employers offering one QHP, employee-only coverage, composite billing.* For an eligible small employer offering employee-only coverage and using composite billing, the employer satisfies the requirements of this paragraph if it pays the same amount toward the premium for each employee receiving employee-only coverage under the QHP, and that amount is equal to at least 50 percent of the premium for employee-only coverage.

(2) *Employers offering one QHP, other tiers of coverage, composite billing.* For an eligible small employer offering one QHP providing at least one tier of coverage with a higher premium than employee-only coverage and using composite billing, the employer satisfies the requirements of this paragraph (b)(2) if it either—

(i) Pays an amount for each employee enrolled in that more expensive tier of coverage that is the same for all employees and that is no less than the amount that the employer would have contributed toward employee-only coverage for that employee, or

(ii) Meets the requirements of paragraph (b)(1) of this section for each tier of coverage that if offers.

(3) *Employers offering one QHP, employee-only coverage, list billing.* For an eligible small employer offering one QHP providing only employee-only coverage and using list billing, the employer satisfies the requirements of this paragraph (b)(3) if either—

(i) The employer pays toward the premium an amount equal to a uniform percentage (not less than 50 percent) of the premium charged for each employee, or

(ii) The employer converts the individual premiums for employee-only coverage into an employer-computed composite rate for self-only coverage, and, if an employee contribution is required, each employee who receives coverage under the QHP pays a uniform amount toward the employee-only premium that is no more than 50 percent of the employer-computed composite rate for employee-only coverage.

(4) *Employers offering one QHP, other tiers of coverage, list billing.* For an eligible small employer offering one QHP providing at least one tier of coverage with a higher premium than employee-only coverage and using list billing, the employer satisfies the requirements of this paragraph (b)(4) if it either—

(i) Pays toward the premium for each employee covered under each tier of coverage an amount equal to or exceeding the amount that the employer would have contributed with respect to that employee for employee-only coverage, calculated either based upon the actual premium that would have been charged by the insurer for that employee for employee-only coverage or based upon the employer-computed composite rate for employee-only coverage, or

(ii) Meets the requirements of paragraph (b)(3) of this section for each tier of coverage that it offers substituting the employer-computed composite rate

for each tier of coverage for the employer-computed composite rate for employee-only coverage.

(5) *Employers offering SHOP dependent coverage.* If SHOP dependent coverage is offered through the SHOP Exchange, the employer does not fail to satisfy the uniform percentage requirement by contributing a different amount toward that SHOP dependent coverage, even if that contribution is zero. For treatment of premiums paid on behalf of an employee's dependents, see § 1.45R–3(g)(1).

(c) *Employers offering more than one QHP.* If an eligible small employer offers more than one QHP, the employer must satisfy the requirements of this paragraph (c). The employer may satisfy the requirements of this paragraph (c) in either of the following two ways:

(1) *QHP-by-QHP method.* The employer makes payments toward the premium with respect to each QHP for which the employer is claiming the credit that satisfy the uniform percentage requirement under paragraph (b) of this section on a QHP-by-QHP basis (so that the amounts or percentages of premium paid by the employer for each QHP need not be identical, but the payments with respect to each QHP must satisfy paragraph (b) of this section); or

(2) *Reference QHP method.* The employer designates a reference QHP and makes employer contributions in accordance with the following requirements—

(i) The employer determines a level of employer contributions for each employee such that, if all eligible employees enrolled in the reference QHP, the contributions would satisfy the uniform percentage requirement under paragraph (b) of this section, and

(ii) The employer allows each employee to apply an amount of employer contribution determined necessary to meet the uniform percentage requirement under paragraph (b) of this section either toward the reference QHP or toward the cost of coverage under any of the other available QHPs.

(d) *Tobacco surcharges and wellness program discounts or rebates*—(i) *Tobacco surcharges.* The tobacco surcharge and amounts paid by the employer to cover the surcharge are not included in premiums for purposes of calculating the uniform percentage requirement, nor are payments of the surcharge treated as premium payments for purposes of calculating the credit. The uniform percentage requirement is also applied without regard to employee payment of the tobacco surcharges in cases in which all or part of the employee tobacco surcharges are not paid by the employer.

(ii) *Wellness programs.* If a plan of an employer provides a wellness program, for purposes of meeting the uniform percentage requirement any additional amount of the employer contribution attributable to an employee's participation in the wellness program over the employer contribution with respect to an employee that does not participate in the wellness program is not taken into account in calculating the uniform percentage requirement, whether the difference is due to a discount for participation or a surcharge for nonparticipation. The employer contribution for employees that do not participate in the wellness program must be at least 50 percent of the premium (including any premium surcharge for nonparticipation). However, for purposes of computing the credit, the employer contributions are taken into account, including those contributions attributable to an employee's participation in a wellness program.

(e) *Special rules regarding employer compliance with applicable State or local law.* An employer will be treated as satisfying the uniform percentage requirement if the failure to otherwise satisfy the uniform percentage requirement is attributable solely to additional employer contributions made to certain employees to comply with an applicable State or local law.

(f) *Examples.* The following examples illustrate the provisions of paragraphs (a) through (e) of this section:

Example 1. (i) *Facts.* An eligible small employer (Employer) offers a QHP on a SHOP Exchange, Plan A, which uses composite billing. The premiums for Plan A are $5,000 per year for employee-only coverage, and $10,000 for family coverage. Employees can elect employee-only or family coverage under Plan A. Employer pays $3,000 (60% of the premium) toward employee-only coverage under Plan A and $6,000 (60% of the premium) toward family coverage under Plan A.

(ii) *Conclusion.* Employer's contributions of 60% of the premium for each tier of coverage satisfy the uniform percentage requirement.

Example 2. (i) *Facts.* Same facts as *Example 1,* except that Employer pays $3,000 (60% of the premium) for each employee electing employee-only coverage under Plan A and pays $3,000 (30% of the premium) for each employee electing family coverage under Plan A.

(ii) *Conclusion.* Employer's contributions of 60% of the premium toward employee-only coverage and the same dollar amount toward the premium for family coverage satisfy the uniform percentage requirement, even though the percentage is not the same.

Example 3. (i) *Facts.* Employer offers two QHPs, Plan A and Plan B, both of which use composite billing. The premiums for Plan A are $5,000 per year for employee-only coverage and $10,000 for family coverage. The premiums for Plan B are $7,000 per year for employee-only coverage and $13,000 for family coverage. Employees can elect employee-only or family coverage under either Plan A or Plan B. Employer pays $3,000 (60% of the premium) for each employee electing employee-only coverage under Plan A, $3,000 (30% of the premium) for each employee electing family coverage under Plan A, $3,500 (50% of the premium) for each employee electing employee-only coverage under Plan B, and $3,500 (27% of the premium) for each employee electing family coverage under Plan B.

(ii) *Conclusion.* Employer's contributions of 60% (or $3,000) of the premiums for employee-only coverage and the same dollar amounts toward the premium for family coverage under Plan A, and of 50% (or $3,500) of the premium for employee-only of coverage and the same dollar amount toward the premium for family coverage under Plan B, satisfy the uniform percentage requirement on a QHP-by-QHP basis; therefore the employer's contributions to both plans satisfy the uniform percentage requirement.

Example 4. (i) *Facts.* Same facts as *Example 3,* except that Employer designates Plan A as the reference QHP. Employer pays $2,500 (50% of the premium) for each employee electing employee-only coverage under Plan A and pays $2,500 of the premium for each employee electing family coverage under Plan A or either employee-only or family coverage under Plan B.

(ii) *Conclusion.* Employer's contribution of 50% (or $2,500) toward the premium of each employee enrolled under Plan A or Plan B satisfies the uniform percentage requirement.

Example 5. (i) *Facts.* Employer receives a list billing premium quote with respect to Plan X, a QHP offered by Employer on a SHOP Exchange for health insurance coverage for each of Employer's four employees. For Employee L, age 20, the employee-only premium is $3,000 per year, and the family premium is $8,000. For Employees M, N and O, each age 40, the employee-only premium is $5,000 per year and the family premium is $10,000. The total employee-only premium for the four employees is $18,000 ($3,000 + (3 × 5,000)). Employer calculates an employer-computed composite employee-only rate of $4,500 ($18,000/4). Employer offers to make contributions such that each employee would need to pay $2,000 of the premium for employee-only coverage. Under this arrangement, Employer would contribute $1,000 toward employee-only coverage for L and $3,000 toward employee-only coverage for M, N, and O. In the event an employee elects family coverage, Employer would make the same contribution ($1,000 for L or $3,000 for M, N, or O) toward the family premium.

(ii) *Conclusion.* Employer satisfies the uniform percentage requirement because it offers and makes contributions based on an employer-calculated composite employee-only rate such that, to receive employee-only coverage, each employee must pay a uniform amount which is not more than 50% of the

composite rate, and it allows employees to use the same employer contributions toward family coverage.

Example 6. (i) *Facts.* Same facts as *Example 5,* except that Employer calculates an employer-computed composite family rate of $9,500 (($8,000 + 3 × 10,000)/4) and requires each employee to pay $4,000 of the premium for family coverage.

(ii) *Conclusion.* Employer satisfies the uniform percentage requirement because it offers and makes contributions based on a calculated employee-only and family rate such that, to receive either employee-only or family coverage, each employee must pay a uniform amount which is not more than 50% of the composite rate for coverage of that tier.

Example 7. (i) *Facts.* Same facts as *Example 5,* except that Employer also receives a list billing premium quote from Plan Y with respect to a second QHP offered by Employer on a SHOP Exchange for each of Employer's 4 employees. Plan Y's quote for Employee L, age 20, is $4,000 per year for employee-only coverage or $12,000 per year for family coverage. For Employees M, N and O, each age 40, the premium is $7,000 per year for employee-only coverage or $15,000 per year for family coverage. The total employee-only premium under Plan Y is $25,000 ($4,000 + (3 × 7,000)). The employer-computed composite employee-only rate is $6,250 ($25,000/4). Employer designates Plan X as the reference plan. Employer offers to make contributions based on the employer-calculated composite premium for the reference QHP (Plan X) such that each employee has to contribute $2,000 to receive employee-only coverage through Plan X. Under this arrangement, Employer would contribute $1,000 toward employee-only coverage for L and $3,000 toward employee-only coverage for M, N, and O. In the event an employee elects family coverage through Plan X or either employee-only or family coverage through Plan Y, Employer would make the same contributions ($1,000 for L or $3,000 for M, N, or O) toward that coverage.

(ii) *Conclusion.* Employer satisfies the uniform percentage requirement because it offers and makes contributions based on the employer-calculated composite employee-only premium for the Plan X reference QHP such that, in order to receive employee-only coverage, each employee must pay a uniform amount which is not more than 50% of the employee-only composite premium of the reference QHP; it allows employees to use the same employer contributions toward family coverage in the reference QHP or coverage through another QHPs.

Example 8. (i) *Facts.* Employer offers employee-only and SHOP dependent coverage through a QHP to its three employees using list billing. All three employees enroll in the employee-only coverage, and one employee elects to enroll two dependents in SHOP dependent coverage. Employer contributes 100% of the employee-only premium costs, but only contributes 25% of the premium costs toward SHOP dependent coverage.

(ii) *Conclusion.* Employer's contribution of 100% toward the premium costs of employee-only coverage satisfies the uniform percentage requirement, even though Employer is only contributing 25% toward SHOP dependent coverage.

Example 9. (i) *Facts.* Employer has five employees. Employer is located in a State that requires employers to pay 50% of employees' premium costs, but also requires that an employee's contribution not exceed a certain percentage of the employee's monthly gross earnings from that employer. Employer offers to pay 50% of the premium costs for all its employees, and to comply with the State law, Employer contributes more than 50% of the premium costs for two of its employees.

(ii) *Conclusion.* Employer satisfies the uniform percentage requirement because its failure to otherwise satisfy the uniform percentage requirement is attributable solely to compliance with the applicable State or local law.

Example 10. (i) *Facts.* Employer has three employees who all enroll in employee-only coverage. Employer is located in a State that has a tobacco surcharge on the premiums of employees who use tobacco. One of Employer's employees smokes. Employer contributes 50% of the employee-only premium costs, but does not cover any of the tobacco surcharge for the employee who smokes.

(ii) *Conclusion.* Employer's contribution of 50% toward the premium costs of employee-only coverage satisfies the uniform percentage requirement. Tobacco surcharges are not factored into premiums when calculating the uniform percentage requirement.

Example 11. (i) *Facts.* Employer has five employees who all enroll in employee-only coverage. Employer offers a wellness program that reduces the employee share of the premium for employees who participate in the wellness program. Employer contributes 50% of the premium costs of employee-only coverage for employees who do not participate in the wellness program and 55% of the premium costs of employee-only coverage for employees who participate in the wellness program. Three of the five employees participate in the wellness program.

(ii) *Conclusion.* Employer's contribution of 50% toward the premium costs of employee-only coverage for the two employees who do not participate in the wellness program and 55% toward the premium costs of employee-only coverage for three employees who participate in the wellness program satisfies the uniform percentage requirement because the additional 5% contribution due to the employees' participation in the wellness program is not taken into account. However, the additional 5% contributions are taken into account for purposes of calculating the credit.

(g) *Effective/applicability date.* This section is applicable for periods after 2013. For transition rules relating to certain plan years starting in 2014, see § 1.45R–3(i).

§ 1.45R–5 Claiming the credit.

(a) *Claiming the credit.* The credit is a general business credit. It is claimed on an eligible small employer's annual income tax return and offsets an employer's actual tax liability for the year. The credit is claimed by attaching Form 8941, ''Credit for Small Employer Health Insurance Premiums,'' to the eligible small employer's income tax return or, in the case of a tax-exempt eligible small employer, by attaching Form 8941 to the employer's Form 990–T, ''Exempt Organization Business Income Tax Return.'' To claim the credit, a tax-exempt eligible small employer must file a form 990–T with an attached Form 8941, even if a Form 990–T would not otherwise be required to be filed.

(b) *Estimated tax payments and alternative minimum tax (AMT) liability.* An eligible small employer may reflect the credit in determining estimated tax payments for the year in which the credit applies in accordance with the estimated tax rules as set forth in sections 6654 and 6655 and the applicable regulations. An eligible small employer may also use the credit to offset the employer's alternative minimum tax (AMT) liability for the year, if any, subject to certain limitations based on the amount of the employer's regular tax liability, AMT liability and other allowable credits. See section 38(c)(1), as modified by section 38(c)(4)(B)(vi). However, an eligible small employer, including a tax-exempt eligible small employer, may not reduce its deposits and payments of employment tax (that is, income tax required to be withheld under section 3402, social security and Medicare tax under sections 3101 and 3111, and federal unemployment tax under section 3301) during the year in anticipation of the credit.

(c) *Reduction of section 162 deduction.* No deduction under section 162 is allowed for the eligible small employer for that portion of the health insurance premiums that is equal to the amount of the credit under § 1.45R–2.

(d) *Effective/applicability date.* This section is applicable for periods after 2013. For rules relating to certain plan years beginning in 2014, see § 1.45R–3(i).

John Dalrymple,

Deputy Commissioner for Services and Enforcement.

Approved: June 24, 2014.

Mark J. Mazur,

Assistant Secretary of the Treasury (Tax Policy).

[FR Doc. 2014–15262 Filed 6–26–14; 4:15 pm]

BILLING CODE 4830–01–P

DEPARTMENT OF HOMELAND SECURITY

Coast Guard

33 CFR Part 165

[Docket No. USCG–2014–0375]

RIN 1625–AA00

Eighth Coast Guard District Annual Safety Zones; Oakmont Yacht Club Fireworks; Allegheny River Mile 11.75 to 12.25; Pittsburgh, PA

AGENCY: Coast Guard, DHS.

ACTION: Notice of enforcement of regulation.

SUMMARY: The Coast Guard will enforce a safety zone for the Oakmont Yacht Club Fireworks on the Allegheny River, from mile 11.75 to 12.25, extending the entire width of the river. This zone will be in effect on July 19, 2014 from 9:30 p.m. until 10:30 p.m. This zone is needed to protect vessels transiting the area and event spectators from the hazards associated with the Oakmont Yacht Club Fireworks. During the enforcement period, entry into, transiting, or anchoring in the safety zone is prohibited to all vessels not registered with the sponsor as participants or official patrol vessels, unless specifically authorized by the Captain of the Port (COTP) Pittsburgh or a designated representative.

DATES: The regulations in 33 CFR 165.801 will be enforced on July 19, 2014.

FOR FURTHER INFORMATION CONTACT: If you have questions on this notice of enforcement, call or email Ronald Lipscomb, Marine Safety Unit Pittsburgh, U.S. Coast Guard, at telephone (412) 644–5808, email *Ronald.c.lipscomb1@uscg.mil.*

SUPPLEMENTARY INFORMATION: The Coast Guard will enforce the Safety Zone for the annual Oakmont Yacht Club Fireworks listed in 33 CFR 165.801 Table 1, Table No. 42; Sector Ohio Valley.

Under the provisions of C33 CFR 165.801, entry into the safety zone listed in Table 1, Table No. 42; Sector Ohio Valley, is prohibited unless authorized by the Captain of the Port or a designated representative. Persons or vessels desiring to enter into or passage through the safety zone must request permission from the Captain of the Port Pittsburgh or a designated representative. If permission is granted, all persons and vessels shall comply with the instructions of the Captain of the Port Pittsburgh or designated representative.

This notice is issued under authority of 5 U.S.C. 552 (a); 33 U.S.C. 1231; 46 U.S.C. Chapter 701, 3306, 3703; 50 U.S.C. 191, 195; 33 CFR 1.05–1, 6.04–1, 6.04–6, and 160.5; Public Law 107–295, 116 Stat. 2064; Department of Homeland Security Delegation No. 0170.1. In addition to this notice in the **Federal Register,** the Coast Guard will provide the maritime community with advance notification of this enforcement period via Local Notice to Mariners and updates via Marine Information Broadcasts.

If the Captain of the Port Pittsburgh or designated representative determines that the Safety Zone need not be enforced for the full duration stated in this notice of enforcement, he or she may use a Broadcast Notice to Mariners to grant general permission to enter the regulated area.

Dated: June 4, 2014.

L.N. Weaver,

Commander, U.S. Coast Guard, Captain of the Port, Pittsburgh.

[FR Doc. 2014–15135 Filed 6–27–14; 8:45 am]

BILLING CODE 9110–04–P

ENVIRONMENTAL PROTECTION AGENCY

40 CFR Part 52

[EPA–R04–OAR–2007–0602; FRL–9912–83–Region–4]

Approval and Promulgation of Implementation Plans for North Carolina: State Implementation Plan Miscellaneous Revisions

AGENCY: Environmental Protection Agency.

ACTION: Final rule.

SUMMARY: The Environmental Protection Agency (EPA) is taking final action to approve the portions of a revision to the North Carolina State Implementation Plan (SIP), submitted by the North Carolina Department of Environment and Natural Resources (NC DENR) on February 3, 2010, that incorporate changes to the state rules reflecting the 2006 national ambient air quality standards (NAAQS) for particulate matter (PM). EPA approved the remaining portions of North Carolina's February 3, 2010, SIP revision in a previous rulemaking.

DATES: This rule will be effective on July 30, 2014.

ADDRESSES: EPA has established a docket for this action under Docket Identification No. EPA–R04–OAR–2007–0602. All documents in the docket are listed on the *www.regulations.gov* Web site. Although listed in the index, some information is not publicly available, i.e., Confidential Business Information or other information whose disclosure is restricted by statute. Certain other material, such as copyrighted material, is not placed on the Internet and will be publicly available only in hard copy form. Publicly available docket materials are available either electronically through *www.regulations.gov* or in hard copy at the Regulatory Development Section, Air Planning Branch, Air, Pesticides and Toxics Management Division, U.S. Environmental Protection Agency, Region 4, 61 Forsyth Street SW., Atlanta, Georgia 30303–8960. EPA requests that if at all possible, you contact the person listed in the **FOR FURTHER INFORMATION CONTACT** section to schedule your inspection. The Regional Office's official hours of business are Monday through Friday, 8:30 to 4:30 excluding federal holidays.

FOR FURTHER INFORMATION CONTACT: Nacosta Ward, Regulatory Development Section, Air Planning Branch, Air, Pesticides and Toxics Management Division, U.S. Environmental Protection Agency, Region 4, 61 Forsyth Street SW., Atlanta, Georgia 30303–8960. The telephone number is (404) 562–9140. Ms. Ward can be reached via electronic mail at *ward.nacosta@epa.gov.*

SUPPLEMENTARY INFORMATION:

Table of Contents

I. This Action
II. Background
III. Response to Comments
IV. Final Action
V. Statutory and Executive Order Reviews

I. This Action

EPA is taking final action to approve the portions of North Carolina's February 3, 2010, SIP revision that relate to the $PM_{2.5}$ and PM_{10} NAAQS (collectively referred to as the ''PM NAAQS''). On May 16, 2013, EPA published a direct final rule approving the portions of North Carolina's February 3, 2010, submission that incorporate amendments to state rules 15A NCAC 02D .0405, .0408, .0409, and .0410 reflecting the NAAQS for ozone, lead, and PM in effect at the time of submittal. *See* 78 FR 28747.

EPA published an accompanying proposed approval to the May 16, 2013, direct final rule in the event that EPA received adverse comment and withdrew the direct final rulemaking. *See* 78 FR 28775. In the direct final rule, EPA stated that if adverse comments were received by June 17, 2013, the rule would be withdrawn and not take effect, the proposed rule would remain in

effect, and an additional public comment period would not be instituted.

On May 23, 2013, EPA received comments from a single commenter solely on the portions of the rulemaking related to the $PM_{2.5}$ NAAQS; therefore, EPA withdrew the PM portions of the direct final rule. *See* 78 FR 41850 (July 12, 2013). The withdrawal of the PM portions did not affect EPA's May 16, 2013, direct final action on North Carolina's SIP revisions related to the ozone and lead NAAQS. EPA is now taking final action to approve only the portions of the February 3, 2010, SIP revision related to the PM NAAQS. EPA has reviewed the changes to North Carolina Rules 15A NCAC 02D .0410 ''$PM_{2.5}$ Particulate Matter'' and 15A NCAC 02D .0409 ''PM_{10} Particulate Matter'' and determined that these changes are consistent with federal regulations in effect at the time of SIP submission; thus, EPA is approving these revisions to the North Carolina SIP.

II. Background

EPA approved a North Carolina's SIP revision on October 22, 2002, that adopted the 1997 24-hour $PM_{2.5}$ NAAQS and 1997 annual $PM_{2.5}$ NAAQS set at 65 micrograms per cubic meter (μg/m^3) and 15 μg/m^3, respectively. *See* 67 FR 64990. On October 17, 2006, EPA revised the 24 hour $PM_{2.5}$ NAAQS to 35 μg/m^3 and retained the annual $PM_{2.5}$ NAAQS at 15 μg/m^3.[1] *See* 71 FR 61144. Accordingly, NC DNER submitted a SIP revision on February 3, 2010, that, among other things, incorporates revisions to state rule 15A NCAC 02D .0410 ''$PM_{2.5}$ Particulate Matter'' that update the rule for consistency with the 2006 $PM_{2.5}$ NAAQS.

EPA approved a North Carolina SIP revision on January 16, 1990, that adopted the initial 1987 24-hour PM_{10} NAAQS and 1987 annual PM_{10} NAAQS set at 150 μg/m^3 and 50 μg/m^3, respectively. *See* 55 FR 1419. On October 17, 2006, EPA retained the 24-hour PM_{10} NAAQS at 150 μg/m^3 and revoked the annual PM_{10} NAAQS. *See* 71 FR 61144. Accordingly, in the February 3, 2010, SIP submission, NC DENR incorporated revisions to state rule 15A NCAC 02D .0409 ''PM_{10} Particulate Matter'' that update the rule for consistency with the 2006 PM_{10} NAAQS.

[1] On December 14, 2012, EPA strengthened the primary annual $PM_{2.5}$ NAAQS to 12.0 μg/m^3 and retained the 24-hour $PM_{2.5}$ NAAQS at 35 μg/m^3. *See* 78 FR 3086 (January 15, 2013).

III. Response to Comments

On May 23, 2013, EPA received a comment from one member of the general public. While the comment was generally in support of EPA's action, EPA withdrew the direct final rule because the comment could be interpreted as adverse. A summary of the comment and EPA's response is provided below.

Comment: The commenter noted that EPA revised the $PM_{2.5}$ NAAQS in 2012, and he recommended that EPA ''approve the SIPs as submitted, with a further recommendation to submit a revised SIP reflecting the new standard within a reasonable amount of time (as determined by EPA).''

Response: Although EPA recently updated the annual $PM_{2.5}$ NAAQS, the State submitted its SIP revision prior to the December 14, 2012, promulgation of the new standard, published on January 15, 2013 (*see* 78 FR 3086). As mentioned above, NC DENR submitted its SIP revision to update the PM NAAQS on February 3, 2010, in response to EPA's promulgation of the 2006 PM NAAQS. EPA believes that it is appropriate to approve North Carolina's February 3, 2010, SIP revision, as it reflects the PM NAAQS in effect at that time, these NAAQS remain in effect, and the 2012 $PM_{2.5}$ NAAQS was not promulgated at that time. EPA notes that today's action does not relieve North Carolina of any current or future requirements regarding the 2012 $PM_{2.5}$ NAAQS and that NC DENR is currently working on a SIP submittal to adopt the 2012 $PM_{2.5}$ NAAQS.

IV. Final Action

EPA is approving the portions of North Carolina's February 3, 2010, SIP revision that relate to the PM NAAQS because they are consistent with the PM NAAQS in effect at the time of submittal.

V. Statutory and Executive Order Reviews

Under the CAA, the Administrator is required to approve a SIP submission that complies with the provisions of the Act and applicable federal regulations. 42 U.S.C. 7410(k); 40 CFR 52.02(a). Thus, in reviewing SIP submissions, EPA's role is to approve state choices, provided that they meet the criteria of the CAA. Accordingly, this action merely approves state law as meeting federal requirements and does not impose additional requirements beyond those imposed by State law. For that reason, this action:

- Is not a ''significant regulatory action'' subject to review by the Office of Management and Budget under Executive Order 12866 (58 FR 51735, October 4, 1993);
- does not impose an information collection burden under the provisions of the Paperwork Reduction Act (44 U.S.C. 3501 *et seq.*);
- is certified as not having a significant economic impact on a substantial number of small entities under the Regulatory Flexibility Act (5 U.S.C. 601 *et seq.*);
- does not contain any unfunded mandate or significantly or uniquely affect small governments, as described in the Unfunded Mandates Reform Act of 1995 (Pub. L. 104–4);
- does not have Federalism implications as specified in Executive Order 13132 (64 FR 43255, August 10, 1999);
- is not an economically significant regulatory action based on health or safety risks subject to Executive Order 13045 (62 FR 19885, April 23, 1997);
- is not a significant regulatory action subject to Executive Order 13211 (66 FR 28355, May 22, 2001);
- is not subject to requirements of Section 12(d) of the National Technology Transfer and Advancement Act of 1995 (15 U.S.C. 272 note) because application of those requirements would be inconsistent with the CAA; and
- does not provide EPA with the discretionary authority to address, as appropriate, disproportionate human health or environmental effects, using practicable and legally permissible methods, under Executive Order 12898 (59 FR 7629, February 16, 1994).

In addition, this rule does not have tribal implications as specified by Executive Order 13175 (65 FR 67249, November 9, 2000), because the SIP is not approved to apply in Indian country, and EPA notes that it will not impose substantial direct costs on tribal governments or preempt tribal law.

The Congressional Review Act, 5 U.S.C. 801 *et seq.,* as added by the Small Business Regulatory Enforcement Fairness Act of 1996, generally provides that before a rule may take effect, the agency promulgating the rule must submit a rule report, which includes a copy of the rule, to each House of the Congress and to the Comptroller General of the United States. EPA will submit a report containing this action and other required information to the U.S. Senate, the U.S. House of Representatives, and the Comptroller General of the United States prior to publication of the rule in the **Federal Register**. A major rule cannot take effect until 60 days after it is published in the **Federal Register**. This action is not a ''major rule'' as defined by 5 U.S.C. 804(2).

Under section 307(b)(1) of the CAA, petitions for judicial review of this action must be filed in the United States Court of Appeals for the appropriate circuit by August 29, 2014. Filing a petition for reconsideration by the Administrator of this final rule does not affect the finality of this action for the purposes of judicial review nor does it extend the time within which a petition for judicial review may be filed, and shall not postpone the effectiveness of such rule or action. This action may not be challenged later in proceedings to enforce its requirements. *See* section 307(b)(2).

List of Subjects in 40 CFR Part 52

Environmental protection, Air pollution control, Incorporation by reference, Intergovernmental relations, Particulate Matter, Reporting and recordkeeping requirements, Volatile organic compounds.

Dated: June 16, 2014.

Heather McTeer Toney,

Regional Administrator, Region 4.

40 CFR part 52 is amended as follows:

PART 52—APPROVAL AND PROMULGATION OF IMPLEMENTATION PLANS

■ 1. The authority citation for part 52 continues to read as follows:

Authority: 42. U.S.C. 7401 *et seq.*

Subpart II—North Carolina

■ 2. Section 52.1770 (c) is amended under Table 1, at Subchapter 2D Air Pollution Control Requirements, Section .0400 Ambient Air Quality Standards by revising the entries for ''.0409,'' and ''.0410'' to read as follows:

§ 52.1770 Identification of plan

* * * * *

(c) * * *

TABLE 1—EPA APPROVED NORTH CAROLINA REGULATIONS

State citation	Title/subject	State effective date	EPA approval date	Explanation
Subchapter 2D Air Pollution Control Requirements				
*	*	*	*	*
Section .0400 Ambient Air Quality Standards				
*	*	*	*	*
Section .0409	Particulate Matter	1/1/2010	6/30/2014 [Insert **Federal Register** citation].	
Section .0410	$PM_{2.5}$ Particulate Matter	1/1/2010	6/30/2014 [Insert **Federal Register** citation].	

* * * * *

[FR Doc. 2014–15151 Filed 6–27–14; 8:45 am]

BILLING CODE 6560–50–P

ENVIRONMENTAL PROTECTION AGENCY

40 CFR Parts 79, 80, 85, 86, 600, 1036, 1037, 1039, 1042, 1048, 1054, 1065, and 1066

[EPA–HQ–OAR–2011–0135; FRL 9906–86–OAR]

RIN 2060–AQ86

Control of Air Pollution From Motor Vehicles: Tier 3 Motor Vehicle Emission and Fuel Standards

Correction

In rule document 2014–06954, appearing on pages 23414–23886, in the issue of Monday, April 28, 2014, make the following corrections:

§ 86.113–94 Fuel specifications. [Corrected]

■ On page 23695 make the following correction:

The first table on page 23695 is corrected as set forth below.

Property	Unit	Type 2–D	Reference procedure [1]
(i) Cetane Number		40–50	ASTM D613
(ii) Cetane Index		40–50	ASTM D976
(iii) Distillation range:			
(A) IBP	°F (°C)	340–400 (171.1–204.4).	STM D86
(B) 10 pct. point		400–460 (204.4–237.8).	
(C) 50 pct. point		470–540 (243.3–282.2)	
(D) 90 pct. point		560–630 (293.3–332.2).	
(E) EP		610–690 (321.1–365.6)	

Property	Unit	Type 2–D	Reference procedure [1]
(iv) Gravity	°API	32–37	ASTM D4052
(v) Total sulfur	ppm	7–15	ASTM D2622
(vi) Hydrocarbon composition: Aromatics, minimum (Remainder shall be paraffins, naphthenes, and olefins).	pct	27	ASTM D5186
(vii) Flashpoint, min	°F (°C)	130 (54.4)	ASTM D93
(viii) Viscosity	centistokes	2.0–3.2	ASTM D445

[1] ASTM procedures are incorporated by reference in § 86.1.

§ 1065.845 Response factor determination. [Corrected]

■ On page 23813 make the following correction:

The table heading for the table titled ''Table 1 of § 1065.845'' is corrected to read as set forth below.

Table 1 of § 1065.845—Default Values for THC FID Response Factor Relative to Propane on a C_1-Equivalent Basis

§ 1066.845 AC17 air conditioning efficiency test procedure. [Corrected]

■ On page 23881 make the following correction:

The equation in the first column is corrected to read as set forth below.

$$e_{\text{CO2-AC17comp}} = 0.5 \cdot \left(\frac{m_{\text{SC03}}}{D_{\text{SC03}}} \right) + 0.5 \cdot \left(\frac{m_{\text{HFET}}}{D_{\text{HFET}}} \right)$$

[FR Doc. C1–2014–06954 Filed 6–27–14; 8:45 am]

BILLING CODE 1505–01–D

ENVIRONMENTAL PROTECTION AGENCY

40 CFR Part 300

[EPA–HQ–SFUND–1989–0007; FRL–9912–81–Region 5]

National Oil and Hazardous Substances Pollution Contingency Plan; National Priorities List: Partial Deletion of the Naval Industrial Reserve Ordnance Plant (NIROP) Superfund Site

AGENCY: Environmental Protection Agency (EPA).

ACTION: Direct final rule.

SUMMARY: EPA Region 5 is publishing a direct final Notice of Deletion of Operable Unit 2 (OU2) of the Naval Industrial Reserve Ordnance Plant (NIROP) Superfund Site (Site), located in Fridley, Minnesota, from the National Priorities List (NPL). The NPL, promulgated pursuant to section 105 of the Comprehensive Environmental Response, Compensation, and Liability Act (CERCLA) of 1980, as amended, is an appendix of the National Oil and Hazardous Substances Pollution Contingency Plan (NCP). This direct final partial deletion is being published by EPA with the concurrence of the State of Minnesota, through the Minnesota Pollution Control Agency (MPCA), because EPA has determined that all appropriate response actions under CERCLA at the OU, identified herein, other than operation, maintenance, and five-year reviews, have been completed. However, this partial deletion does not preclude future actions under Superfund.

EPA divided the NIROP Site into three portions, known as OUs, for ease of addressing its contaminant issues. This partial deletion pertains to OU2, which includes all the unsaturated soils within the legal boundaries of the NIROP Superfund Site exclusive of unsaturated soils underlying the former Plating Shop Area (see Site Map in the SEMS ID 446572 document listed in the Deletion Docket for OU2). The following areas will remain on the NPL and are not being considered for deletion as part of this action: OU1 and OU3. OU1 includes the contaminated groundwater within and originating from the NIROP Superfund Site. OU3 includes all the unsaturated soils underlying the former Plating Shop Area.

DATES: This direct final partial deletion is effective August 29, 2014 unless EPA receives adverse comments by July 30, 2014. If adverse comments are received, EPA will publish a timely withdrawal of the direct final partial deletion in the **Federal Register** informing the public that the deletion will not take effect.

ADDRESSES: Submit your comments, identified by Docket ID no. EPA–HQ–SFUND–1989–0007, by one of the following methods:

- *http://www.regulations.gov*: Follow on-line instructions for submitting comments.
- *Email:* Sheila Desai, Remedial Project Manager, at desai.sheila@epa.gov or Teresa Jones, Community Involvement Coordinator, at *jones.teresa@epa.gov*.
- *Fax:* Gladys Beard at (312) 697–2077.
- *Mail:* Sheila Desai, Remedial Project Manager, Environmental Protection Agency (SR–6J), 77 West Jackson Boulevard, Chicago, IL 60604, (312) 353–4150 or Teresa Jones, Community Involvement Coordinator, Environmental Protection Agency (SI–7J), 77 West Jackson Boulevard, Chicago, IL 60604, (312) 886–0725 or toll free at 1-(800) 621–8431.
- *Hand delivery:* Teresa Jones, Community Involvement Coordinator, Environmental Protection Agency (SI–7J), 77 West Jackson Boulevard, Chicago, IL 60604. Such deliveries are only accepted during the docket's normal hours of operation, and special arrangements should be made for deliveries of boxed information. The normal business hours are Monday through Friday, 8:30 a.m. to 4:30 p.m. CST, excluding federal holidays.

Instructions: Direct your comments to Docket ID no. EPA–HQ–SFUND–1989–0007. EPA's policy is that all comments received will be included in the public docket without change and may be made available online at *http://www.regulations.gov*, including any personal information provided, unless the comment includes information claimed to be Confidential Business Information (CBI) or other information whose disclosure is restricted by statute. Do not submit information that you consider to be CBI or otherwise protected through *http://www.regulations.gov* or email. The

http://www.regulations.gov Web site is an ''anonymous access'' system, which means EPA will not know your identity or contact information unless you provide it in the body of your comment. If you send an email comment directly to EPA without going through *http://www.regulations.gov*, your email address will be automatically captured and included as part of the comment that is placed in the public docket and made available on the Internet. If you submit an electronic comment, EPA recommends that you include your name and other contact information in the body of your comment and with any disk or CD–ROM you submit. If EPA cannot read your comment due to technical difficulties and cannot contact you for clarification, EPA may not be able to consider your comment. Electronic files should avoid the use of special characters, any form of encryption, and be free of any defects or viruses.

Docket: All documents in the docket are listed in the *http://www.regulations.gov* index. Although listed in the index, some information is not publicly available, e.g., CBI or other information whose disclosure is restricted by statute. Certain other material, such as copyrighted material, will be publicly available only in the hard copy. Publicly available docket materials are available either electronically at *http://www.regulations.gov* or in hard copy at:

- Environmental Protection Agency Region 5, 77 West Jackson Boulevard, Chicago, IL 60604, *Phone*: (312) 353–1063, *Hours*: Monday through Friday, 8:30 a.m. to 4:30 p.m. CST, excluding federal holidays.
- The Navy has set up an online repository for the NIROP Superfund Site at the link below. Please click on the Administrative Records link to see all the documents. *http://go.usa.gov/DyNY*
- The Minnesota Pollution Control Agency also has an information repository for the NIROP Superfund Site at their offices: 520 Lafayette Road, St. Paul, MN 55155. Call 651–296–6300 or toll-free at 800–657–3864 to schedule an appointment.

FOR FURTHER INFORMATION CONTACT:

Sheila Desai, Remedial Project Manager, Environmental Protection Agency (SR–6J), 77 West Jackson Boulevard, Chicago, IL 60604, (312) 353–4150, *desai.sheila@epa.gov*.

SUPPLEMENTARY INFORMATION:

Table of Contents

I. Introduction
II. NPL Deletion Criteria
III. Deletion Procedures
IV. Basis for Site Deletion
V. Deletion Action

I. Introduction

EPA divided the NIROP Superfund Site into three portions, known as OUs, for ease of addressing its contaminant issues. EPA Region 5 is publishing this Direct Final Notice of Partial Deletion of OU2 of the NIROP Superfund Site from the National Priorities List (NPL) and requests public comments on this action. OU2 includes all the unsaturated soils within the legal boundaries of the NIROP Superfund Site exclusive of unsaturated soils underlying the former Plating Shop Area (see Site Map in the SEMS ID 446572 document listed in the Deletion Docket for OU2). The following areas will remain on the NPL and are not being considered for deletion as part of this action: OU1 and OU3. OU1 includes the contaminated groundwater within and originating from the NIROP Superfund Site. OU3 includes all the unsaturated soils underlying the former Plating Shop Area. This partial deletion pertains to soil in OU2. The NPL constitutes Appendix B of 40 CFR part 300, which is the NCP, and which EPA promulgated pursuant to section 105 of CERCLA, as amended. EPA maintains the NPL as the list of sites that appear to present a significant risk to public health, welfare, or the environment. Sites on the NPL may be the subject of remedial actions financed by the Hazardous Substance Superfund (Fund). This partial deletion of the NIROP Superfund Site is proposed in accordance with 40 CFR 300.425(e) and is consistent with the Notice of Policy Change: Partial Deletion of Sites Listed on the National Priorities List, (60 FR 55466) on November 1, 1995. As described in 300.425(e)(3) of the NCP, sites deleted from the NPL remain eligible for Fund-financed remedial actions if future conditions warrant such actions.

Because EPA considers this action to be noncontroversial and routine, this action will be effective *August 29, 2014* unless EPA receives adverse comments by *July 30, 2014.* Along with this Direct Final Notice of Partial Deletion, EPA is co-publishing a Notice of Intent for Partial Deletion in the ''Proposed Rules'' section of the **Federal Register**. If adverse comments are received within the 30-day public comment period on this partial deletion action, EPA will publish a timely withdrawal of this Direct Final Notice of Partial Deletion before the effective date of the partial deletion, and the deletion will not take effect. EPA will, as appropriate, prepare a response to comments and continue with the deletion process on the basis of the Notice of Intent for Partial Deletion and the comments already received. There will be no additional opportunity to comment.

Section II of this document explains the criteria for deleting sites from the NPL. Section III discusses procedures that EPA is using for this action. Section IV discusses OU2 of the NIROP Superfund Site and demonstrates how the deletion criteria are met for this OU. Section V discusses EPA's action to partially delete OU2 from the NPL unless adverse comments are received during the public comment period.

II. NPL Deletion Criteria

The NCP establishes the criteria that EPA uses to delete sites from the NPL. In accordance with 40 CFR 300.425(e), sites may be deleted from the NPL where no further response is appropriate. In making such a determination pursuant to 40 CFR 300.425(e), EPA will consider, in consultation with the state, whether any of the following criteria have been met:

1. Responsible parties or other persons have implemented all appropriate response actions required;
2. All appropriate Fund-financed response under CERCLA has been implemented, and no further response action by responsible parties is appropriate; or
3. The remedial investigation has shown that the release poses no significant threat to public health or the environment and, therefore, the taking of remedial measures is not appropriate.

Pursuant to CERCLA section 121(c) and the NCP, EPA conducts five-year reviews to ensure the continued protectiveness of remedial actions where hazardous substances, pollutants, or contaminants remain at a site above levels that allow for unlimited use and unrestricted exposure. EPA conducts such five-year reviews even if a site is deleted from the NPL. EPA may initiate further action to ensure continued protectiveness at a deleted site if new information becomes available that indicates it is appropriate. Whenever there is a significant release from a site deleted from the NPL, the deleted site may be restored to the NPL without application of the hazard ranking system.

III. Deletion Procedures

The following procedures apply to deletion of OU2 of the NIROP Superfund Site:

1. EPA consulted with the State of Minnesota prior to developing this Direct Final Notice of Partial Deletion and the Notice of Intent for Partial Deletion co-published today in the

''Proposed Rules'' section of the **Federal Register**.

2. EPA has provided the State 30 working days for review of this direct final Notice of Partial Deletion and the parallel Notice of Intent for Partial Deletion prior to their publication today, and the State, through the MPCA, has concurred on the partial deletion of the Site from the NPL.

3. Concurrently with the publication of this direct final Notice of Partial Deletion, a notice of the availability of the parallel Notice of Intent for Partial Deletion is being published in the Sun Focus, located in Fridley, Minnesota. The newspaper notice announces the 30-day public comment period concerning the Notice of Intent for Partial Deletion of the Site from the NPL.

4. EPA placed copies of documents supporting the proposed partial deletion in the deletion docket and made these items available for public inspection and copying at the Site information repositories, i.e., at EPA's offices in Chicago and online.

5. If adverse comments are received within the 30-day public comment period on this partial deletion action, EPA will publish a timely notice of withdrawal of this direct final Notice of Partial Deletion before its effective date and will prepare a response to comments. EPA may continue with the deletion process on the basis of the Notice of Intent for Partial Deletion and the comments already received.

Deletion of a portion of a site from the NPL does not itself create, alter, or revoke any individual's rights or obligations. Deletion of a portion of a site from the NPL does not in any way alter EPA's right to take enforcement actions, as appropriate. The NPL is designed primarily for informational purposes and to assist EPA management. Section 300.425(e)(3) of the NCP states that the deletion of a site from the NPL does not preclude eligibility for future response actions, should future conditions warrant such actions.

IV. Basis for Site Deletion

The following information provides EPA's rationale for deleting OU2 of the NIROP Superfund Site from the NPL. EPA believes it is appropriate to delete OU2 of the NIROP Superfund Site because all appropriate response actions under CERCLA, other than operation, maintenance, and five-year reviews, have been completed at OU2 and it is ready for redevelopment as a commercial and/or industrial property.

Site Background and History

The NIROP Superfund Site (CERCLIS ID MN3170022914) is located in the northern portion of the Minneapolis/St. Paul Metropolitan Area in an industrial/commercial area within the limits of Fridley, Minnesota. The Site is not adjacent to any residential areas and is not located in an environmentally sensitive area nor near any known environmentally sensitive areas.

The Site is approximately 82.6 acres, most of which are covered with buildings or pavement. The U.S. Navy and/or its contractors produced advanced weapons systems at the facility beginning in 1940. The former NIROP facility is currently owned by Fridley Land, LLC which plans to redevelop the property for commercial and/or industrial use.

During the early 1970s, paint sludges and chlorinated solvents generated from ordnance manufacturing processes were disposed of in pits and trenches in the North 40 area which is the undeveloped area of the Site immediately north of the building. Contaminant sources in the North 40 area and beneath the NIROP building were not identified until December 1980, when MPCA received information concerning historical waste disposal practices at NIROP. In 1981, trichloroethylene (TCE) was discovered in on-site groundwater wells and in the City of Minneapolis' drinking water treatment plant intake pipe, located in the Mississippi River less than 1 mile downstream from the Site. In 1983, investigations identified pits and trenches in the North 40 area of the NIROP Site where drummed wastes had been disposed of. From November 1983 to March 1984, approximately 1,200 cubic yards of contaminated soil and 43 (55-gallon) drums were excavated and disposed of off-site.

The NIROP Superfund Site was proposed for inclusion on the NPL in July 1989 (54 FR 29820). The Site was placed on the NPL in November 1989 (54 FR 48184).

In March 1991, the Navy, EPA, and MPCA signed a Federal Facilities Agreement (FFA). Per the FFA, one purpose of that agreement was to ''Identify alternatives for Remedial Action for Operable Units'' which are appropriate for the Site prior to the implementation of Final Remedial Actions for the Site.

Remedial Investigation and Feasibility Study (RI/FS)

Based on the results of a geophysical investigation conducted in 1995, 23 (55-gallon) drums and 12 smaller containers were found in the North 40 area of the NIROP property. These drums were excavated during a removal action conducted from April to June of 1996. In 1996, during a sampling event of OU2 soils, in the vicinity of a previously unexcavated area near the North 40 area, free liquids were encountered which resulted in an additional removal action. A total of 31 (55-gallon) drums were discovered and subsequently sampled and removed for off-site disposal. In addition, several empty and crushed drums were also discovered and removed with other contaminated debris. Volatile organic compound contamination was reported in subsurface soils.

A risk assessment for OU2 was conducted in 1996. In a revision of that risk assessment, it was determined that in one sub-area of OU2, risk was inordinately influenced by one single data point. Therefore, during the summer of 2002, the Navy conducted a time-critical removal action to remove approximately 35 cubic yards of soil around this OU2 subarea with an elevated contaminant concentration. This removal was completed in June 2002, and addressed the last know location where there were unacceptable contaminant risks in near surface soils.

Record of Decision (ROD) Findings

The Remedial Action Objectives (RAOs) were (1) to prevent unacceptable risks due to residential or other unrestricted exposures to contaminated soils at the site and (2) to prevent unacceptable risks to industrial or construction workers due to exposures to contaminated soils at the site. The ROD for OU2 was jointly signed in September 2003 by the Navy, EPA and MPCA.

This is the only ROD for this site applicable to this partial deletion.

ROD for OU2 (September 2003)

The Selected Remedy to address unacceptable risk at OU2 of the NIROP Site is Land Use Controls (LUCs). The ROD called for LUCs to be maintained until EPA and MPCA determine that the concentrations of hazardous substances in the soils have been reduced to levels that allow for a less restrictive use of the Site.

The LUC Performance Objectives for OU2 are:

- To restrict the use of the property to industrial or restricted commercial use, until EPA and MPCA determine that concentrations of hazardous substances in the soils have been reduced to levels that allow for less restrictive use.
- To prohibit the disturbance of soil deeper than 3 feet below ground surface

in those Designated Restricted Areas, which include Area 3 and Area 4 of OU2 (see Site Map in the SEMS ID 446572 document listed in the Deletion Docket for OU2) or the removal of any soils excavated in those areas from the facility without prior written approval of EPA and MPCA.

The property will be restricted to only industrial or restricted commercial uses. Industrial uses generally include, but are not limited to, the following types: public utility services, rail and freight services, raw storage facilities, refined material storage facilities, and manufacturing facilities engaged in the mechanical or chemical transformation of materials or substances into new products. Restricted commercial use is defined as use where access or occupancy by non-employees is less frequent or is restricted, including a wide variety of uses, ranging from non-public access and both outdoor and indoor activities (e.g., large scale warehouse operations), to limited public access and indoor worker activities (e.g., shopping mall, retail outlet, bank, dentist office). Strictly prohibited uses under either category shall include any child care or pre-school facility, playground, any form of housing, churches, social centers, hospitals, elder care facilities or nursing homes.

Remedial Design (RD)

In August 2004, EPA concurred with the Navy's March 2004 Land Use Control Remedial Design (LUCRD) for OU2. The LUCRD specifies how the OU2 remedy will be implemented, maintained, and enforced should any breach of the remedy occur. It details the Navy's continuing responsibilities with respect to OU2, including the following: ensuring annual on-site physical inspections of OU2 are performed to confirm continued compliance with all LUC Performance Objectives; ensuring annual LUC Compliance Certifications are provided to EPA and MPCA that explain any deficiency, if found; conducting five-year reviews of the remedy as required by CERCLA and the NCP; notifying EPA and MPCA prior to any planned property conveyance; providing EPA and MPCA the opportunity to review the text of intended deed provisions; and notifying EPA and MPCA should site activities interfere with LUC effectiveness.

Response Activities/LUCs

The LUCs were incorporated into a Quitclaim Deed that was implemented on June 17, 2004, and executed by the property owner, the United States, and MPCA, and that acts as an environmental covenant describing the property restrictions. These deed restrictions run with the land such that any subsequent owner is bound by the same restrictions. The LUCs are to remain in place until EPA and MPCA determine that the concentrations of hazardous substances in the soils have been reduced to levels that allow for a less restrictive use.

Cleanup Goals

There is no cleanup associated with the remedy for OU2. Surface soils that posed unacceptable commercial/industrial risk levels were excavated and disposed of off-site during removal actions prior to implementation of the LUCs at the Site.

Operation and Maintenance (O&M)

The Navy, as the lead agency, is responsible for conducting routine inspections to ensure that LUCs are maintained and enforced. The Navy is responsible for reporting the results of the inspections and any breach of the LUCs to the MPCA and EPA.

Five-Year Review (FYR)

The Navy conducted a FYR at the Site in October 2013. The 2013 FYR concluded that the remedy at NIROP for OU2 is protective of human health and the environment. The FYR calls for the Navy to continue long-term stewardship to ensure that the LUCs are maintained.

Future Redevelopment

Plans are currently underway to redevelop the NIROP Site into a commercial office/warehouse complex. This planned redevelopment is consistent with the existing Land Use designation for the site. The three parties to the FFA concur that the delisting of OU2 from the NPL would facilitate this redevelopment effort and allow OU2 to become eligible for State and Federal Brownfields funding. Superfund NPL site property is not eligible for Federal Brownfields funding.

A developer has enrolled the NIROP site and certain adjacent land into MPCA's Voluntary Investigation and Cleanup (VIC) program. In conjunction with the redevelopment of the NIROP Superfund Site, any additional investigations will be conducted under the oversight and direction of MPCA's VIC program.

Community Involvement

Public participation activities have been satisfied as required in CERCLA section 113(k), 42 U.S.C. 9613(k), and CERCLA section 117, 42 U.S.C. 9617. Documents in the deletion docket, which EPA relied on for recommendation of the partial deletion of this Site from the NPL, are available to the public in the information repositories and at *www.regulations.gov.* Documents in the docket include maps which identify the specific parcels of land that are included in this document (i.e., OU2).

Determination That the Site Meets the Criteria for Deletion in the NCP

The NCP (40 CFR 300.425(e)) states that portions of a site may be deleted from the NPL when no further response action is appropriate. EPA, in consultation with the State of Minnesota, has determined that no further action is appropriate.

V. Deletion Action

EPA, with concurrence of the State of Minnesota through the MPCA, has determined that all appropriate response actions under CERCLA, other than operation, maintenance, and five-year reviews, have been completed. Therefore, EPA is deleting OU2 of the NIROP Superfund Site from the NPL.

Because EPA considers this action to be noncontroversial and routine, EPA is proceeding without prior publication. This action will be effective *August 29, 2014* unless EPA receives adverse comments by *July 30, 2014.* If adverse comments are received within the 30-day public comment period, EPA will publish a timely withdrawal of this direct final notice of partial deletion before the effective date of the partial deletion and it will not take effect. EPA will prepare a response to comments and continue with the deletion process on the basis of the notice of intent to partially delete and the comments already received. There will be no additional opportunity to comment.

List of Subjects in 40 CFR Part 300

Environmental protection, Air pollution control, Chemicals, Hazardous waste, Hazardous substances, Intergovernmental relations, Penalties, Reporting and recordkeeping requirements, Superfund, Water pollution control, Water supply.

Dated: June 12, 2014.

Susan Hedman,

Regional Administrator Region 5.

For the reasons set out in this document, 40 CFR part 300 is amended as follows:

PART 300—[AMENDED]

■ 1. The authority citation for part 300 continues to read as follows:

Authority: 33 U.S.C. 1321(c)(2); 42 U.S.C. 9601–9657; E.O. 12777, 56 FR 54757, 3 CFR, 1991 Comp., p. 351; E.O. 12580, 52 FR 2923; 3 CFR, 1987 Comp., p. 193.

Appendix B—[Amended]

■ 2. Table 2 of Appendix B to part 300 is amended by revising the entry for ''MN,'' ''Naval Industrial Reserve Ordnance Plant,'' ''Fridley'' to read as follows:

Appendix B to Part 300—National Priorities List

* * * * *

TABLE 2—FEDERAL FACILITIES SECTION

St	Site name	City/County	(Notes) [a]
*	*	*	*
MN	Naval Industrial Reserve Ordnance Plant	Fridley	P
*	*	*	*

* * * * *

Notes:

[a] A = Based on issuance of health advisory by Agency for Toxic Substances and Disease Registry (if scored, HRS score need not be greater than or equal to 28.50).

* * * * *

P = Sites with partial deletion(s).

* * * * *

[FR Doc. 2014–15255 Filed 6–27–14; 8:45 am]

BILLING CODE 6560–50–P

DEPARTMENT OF THE INTERIOR

Bureau of Land Management

43 CFR Part 3830

[LLWO320000–L19900000.PP0000]

RIN 1004–AE35

Required Fees for Mining Claims or Sites

AGENCY: Bureau of Land Management, Interior.

ACTION: Final rule.

SUMMARY: The Bureau of Land Management (BLM) is issuing this final rule to make statutorily authorized adjustments to its location and maintenance fees for unpatented mining claims, mill sites, and tunnel sites. These adjustments reflect changes in the Consumer Price Index (CPI), which is published by the Bureau of Labor Statistics.

DATES: The final rule is effective June 30, 2014.

ADDRESSES: You may submit inquiries to: Mail: Director (630), Bureau of Land Management, U.S. Department of the Interior, 1849 C St. NW., Washington, DC 20240, Attention: 1004–AE27. Personal or messenger delivery: U.S. Department of the Interior, Bureau of Land Management, 20 M St. SE., Room 2134LM, Attention: Regulatory Affairs, Washington, DC 20003. Federal eRulemaking Portal: *http://www.regulations.gov.* Follow the instructions at this Web site.

FOR FURTHER INFORMATION CONTACT: Sonia Santillan at 202–912–7123, in the Solid Minerals Group as to program matters or the substance of the final rule or Jennifer Noe in the Division of Regulatory Affairs at 202–912–7442 for information relating to the rulemaking process generally. Persons who use a telecommunications device for the deaf (TDD) may call the Federal Information Relay Service (FIRS) at 1–800–877–8339, 24 hours a day, seven days a week to contact the above individuals.

SUPPLEMENTARY INFORMATION:

I. Background
II. Discussion of the Final Rule
III. Procedural Matters

I. Background

The Mining Law of 1872 allows individuals and corporations to prospect for mineral deposits in public lands, and stake (or ''locate'') a claim on the deposits discovered. Historically, annual assessment work and related filings have been required by statute in order to maintain an unpatented mining claim or site. (30 U.S.C. 28–28e; 43 U.S.C. 1744(a) and (c)).

Beginning in fiscal year 1993, mining claimants have been required to pay an annual maintenance fee in lieu of performing annual assessment work and making annual filings. Mining claimants locating new claims or sites must also pay a one-time location fee. (30 U.S.C. 28f–28l).

This rule implements 30 U.S.C. 28j(c), which authorizes adjustments to the location and annual maintenance fees ''to reflect changes in the Consumer Price Index published by the Bureau of Labor Statistics of the Department of Labor every 5 years after August 10, 1993, or more frequently if the Secretary determines an adjustment to be reasonable.'' Section 28j(c) also requires that mining claimants be provided ''notice of any adjustment made under this subsection not later than July 1 of any year in which the adjustment is made,'' and that any fee adjustment ''shall begin to apply the first assessment year which begins after adjustment is made.''

As enacted in 1993, the one-time location fee was $25, and the annual maintenance fee was $100 per mining claim or site. In 2004, the BLM increased the amount of the location and maintenance fees to $30 and $125 respectively, based on the change in the CPI from September 1, 1993, to December 31, 2003, 69 FR 40294 (July 1, 2004). Then in 2009, the BLM increased the amount of the location and maintenance fees to $34 and $140, respectively, based on the change in the CPI from December 31, 2003, to December 31, 2008, 74 FR 30959 (June 29, 2009). The BLM has promulgated other rules that have affected other aspects of the table of charges and fees at 43 CFR 3830.21, the regulation that is amended by this rule. For example, on July 27, 2012, the BLM published an interim final rule, 77 FR 44155 (July 27, 2012), that amended 43 CFR 3830.21 pursuant to a statutory amendment enacted in December of 2011, which changed the way the maintenance fee is calculated for unpatented placer mining claims.

The adjustments made in this rule are based upon the change in the CPI from December 31, 2008, to December 31, 2013, as reported by the Bureau of Labor Statistics in the CPI Detailed Report, Table 24C, Historical Chained Consumer Price Index for All Urban Consumers (C–CP–U): U.S. city average, all items (*http://www.bls.gov/cpi/cpid1312.pdf*). The calculated change is 9.96 percent from December 31, 2008, through December 31, 2013. A calculated value for the fees was obtained by inflating the location and maintenance fees established in the

2009 rulemaking by 9.96 percent. The new location fee is $37 for each mining claim or site. The new maintenance fee is $155 for each lode mining claim, mill site, or tunnel site; and $155 for each 20 acres or portion thereof for each placer mining claim. The new location fee is based on rounding the calculated value to the nearest $1. The new maintenance fee is based on rounding the calculated value to the nearest $5.

Mining claimants must pay the new location and maintenance fee for any mining claim or site located on or after September 1, 2014. Mining claimants must also pay the new maintenance fee for existing mining claims and sites to maintain those claims and sites, beginning with the 2015 assessment year. The maintenance fee for existing claims and sites is due on or before September 1, 2014. In accordance with 43 CFR 3834.23(d), mining claimants who have already submitted maintenance fee payments for the 2015 assessment year, or those who timely pay the 2015 assessment year maintenance fee based on the fee in effect immediately before the adjustment was made, will be given an opportunity to pay the additional amount without penalty upon notice from the BLM. The BLM will also give claimants the opportunity to cure deficient maintenance and location fee payments for new claims or sites located on or after September 1, 2014, and timely received on or before December 31, 2014. Failure to cure the payments within the time allowed will cause the affected mining claims or sites to be forfeited. After December 31, 2014, the full maintenance and location fee payments, based on the new amounts, are required at the time of recording along with the required processing fee.

II. Discussion of the Final Rule

Why the Rule Is Being Published on a Final Basis

The BLM is adopting this final rule solely to adjust the location and maintenance fee amounts in paragraphs (a) and (d) of section 43 CFR 3830.21. The BLM for good cause finds under 5 U.S.C. 553(b)(3)(B) that notice and an opportunity for public comment for this rule are unnecessary, and that this rule may properly take effect upon publication. The reason is that this rule implements a statutory requirement to adjust the location and annual maintenance fees at least every 5 years, and the last adjustment was made in 2009. The statute specifies the method of calculation of the fee adjustments and prescribes the form and manner of notice of the fee adjustment, and the BLM has no discretion in implementing the statute. The BLM also determines under 5 U.S.C. 553(d) that there is good cause to place the rule into effect on the date of publication, because the adjustments made in the rule are explicitly authorized by statute.

Organization of the Final Rule

This final rule contains only the specific amendments necessary to conform to the requirements of the statute. The amendments appear as modifications of the fee transaction table at 43 CFR 3830.21 to change the amount of the location and annual maintenance fees required to be paid for each lode mining claim, mill site, or tunnel site, and for each 20 acres or portion thereof for each placer mining claim.

III. Procedural Matters

Executive Order 12866, Regulatory Planning and Review

In accordance with the criteria in Executive Order 12866, BLM has determined that this rule is not a significant regulatory action.

- The rule will not have an annual effect on the economy of $100 million or more or adversely affect in a material way the economy, a sector of the economy, productivity, competition, jobs, the environment, public health or safety, or State, local, or tribal governments or communities. The fee adjustment does not change the substance of current mining claim administration within the BLM. The total amount of fees to be collected, including the effects of the adjustment, is estimated to be $59 million annually, of which approximately $5 million will be attributable to the adjustments made in this rule.
- This rule will not create inconsistencies with other agencies' actions. It does not change the relationships of the BLM to other agencies and their actions.
- This rule will not materially affect entitlements, grants, loan programs, or the rights and obligations of their recipients. The rule does not address any of these programs.
- This rule will not raise novel legal or policy issues because it makes no major substantive changes in the regulations. The Constitutionality of the location and maintenance fees has been challenged in the Federal courts. The courts have consistently upheld the fee legislation and implementing regulations.

Regulatory Flexibility Act

The BLM certifies that this rule will not have a significant economic effect on a substantial number of small entities as defined under the Regulatory Flexibility Act (5 U.S.C. 601 *et seq.*) The rule will have a minor impact because the fees paid by small entities will be adjusted. Although the new fees will impact a substantial number of small entities, the fee increases do not represent a significant economic effect. A final Regulatory Flexibility Analysis is not required, and a Small Entity Compliance Guide is not required. For the purposes of this section a ''small entity'' is an individual, limited partnership, or small company, at ''arm's length'' from the control of any parent companies, with fewer than 500 employees or less than $7 million in revenue. This definition is consistent with Small Business Administration regulations at 13 CFR 121.201.

Small Business Regulatory Enforcement Fairness Act

This rule is not a major rule under 5 U.S.C. 804(2), the Small Business Regulatory Enforcement Fairness Act. This rule:

- Will not have an annual effect on the economy of $100 million or more. The revised regulation will not materially alter current BLM policy. The fee adjustments are authorized by statute. The total amount of fees collected, including the effects of the adjustment, is estimated to be $59 million annually, of which $5 million is attributable to the adjustments made in this rule.
- Will not cause a major increase in costs or prices for consumers, individual industries, Federal, State, or local government agencies, or geographic regions.
- Will not have significant adverse effects on competition, employment, investment, productivity, innovation, or the ability of U.S.-based enterprises to compete with foreign-based enterprises.

Unfunded Mandates Reform Act

In accordance with the Unfunded Mandates Reform Act (2 U.S.C. 1501 *et seq.*):

- This rule will not ''significantly or uniquely'' affect small governments. A Small Government Agency Plan is unnecessary.
- This rule will not produce a Federal mandate of $100 million or greater in any year. It is not a ''significant regulatory action'' under the Unfunded Mandates Reform Act. The changes implemented in this rule do not require anything of any non-Federal governmental entity.

Executive Order 12630, Takings

In accordance with Executive Order 12630, the BLM finds that the rule does not have takings implications. A takings implication assessment is not required. This rule does not substantially change BLM policy. Nothing in this rule constitutes a taking. The Federal courts have heard a number of suits challenging the imposition of the rental and maintenance fees as a taking of a right, or, alternatively, as an unconstitutional tax. The courts have upheld the fee legislation and the BLM regulations as a proper exercise of Congressional and Executive authorities.

Executive Order 13132, Federalism

The final rule will not have a substantial direct effect on the states, on the relationship between the national government and the states, or on the distribution of power and responsibilities among the various levels of government. Therefore, in accordance with Executive Order 13132, the BLM has determined that the final rule does not have sufficient Federalism implications to warrant preparation of a Federalism Assessment.

Executive Order 13175, Consultation and Coordination With Indian Tribal Governments

In accordance with Executive Order 13175, the BLM finds that the final rule does not include policies that have Tribal implications. Because this rule does not make significant substantive changes in the regulations and does not specifically involve Indian reservation lands (which are closed to the operation of the Mining Law), the BLM finds that the rule will have no implications for Indians, Indian Tribes, and Tribal governments.

Executive Order 12988, Civil Justice Reform

In accordance with Executive Order 12988, the BLM finds that the final rule does not unduly burden the judicial system, and therefore meets the requirements of sections 3(a) and 3(b)(2) of the Order. The BLM consulted with the Department of the Interior's Office of the Solicitor during the drafting process.

Paperwork Reduction Act

The BLM has determined this final rule does not contain any new information collection requirements that the Office of Management and Budget (OMB) must approve under the Paperwork Reduction Act of 1995 (44 U.S.C. 3501 *et seq.*). The OMB has approved the information collection requirements in the regulations under OMB control number 1004–0114 that pertain to the payment of mining claim recordation and maintenance fees.

National Environmental Policy Act (NEPA)

This final rule does not constitute a major Federal action significantly affecting the quality of the human environment. A detailed statement under the National Environmental Policy Act of 1969 (NEPA) is not required because this rule is part of the routine administration of the fee legislation and is covered by a Departmental categorical exclusion provided for under 43 CFR 46.210(f). This rule will result in no new surface disturbing activities and therefore will have no effect on ecological or cultural resources. In promulgating this rule, the government is conducting routine and continuing government business of an administrative nature having limited context and intensity. Therefore, it is categorically excluded from environmental review under section 102(2)(C) of NEPA, pursuant to 43 CFR 46.205. The rule does not meet any of the extraordinary circumstances criteria for categorical exclusions listed at 43 CFR 46.215. Under Council on Environmental Quality regulations (40 CFR 1508.4) and the environmental policies and procedures of the Department, the term ''categorical exclusion'' means a category of actions which do not individually or cumulatively have a significant effect on the human environment and which have been found to have no such effect on procedures adopted by a Federal agency and for which, therefore, neither an environmental assessment nor an environmental impact statement is required.

Executive Order 13211, Actions Concerning Regulations That Significantly Affect Energy Supply, Distribution, or Use

This rule is not a significant energy action. It will not have an adverse effect on energy supplies. To the extent that the rule affects the mining of energy minerals (i.e., uranium and other fissionable metals), the rule applies only a statutory adjustment of the mining claim location and maintenance fees that the BLM has been collecting for many years. It will not significantly change financial obligations of the mining industry.

Author

The principal author of this final rule is Sonia Santillan in the Solid Minerals Group assisted by the Division of Regulatory Affairs, Washington Office, BLM.

List of Subjects in 43 CFR Part 3830

Mineral royalties, Mines, Public lands—mineral resources, Reporting and recordkeeping requirements.

For the reasons stated in the preamble, the BLM amends 43 CFR part 3830 as follows:

PART 3830—LOCATING, RECORDING, AND MAINTAINING MINING CLAIMS OR SITES; GENERAL PROVISIONS

■ 1. The authority citation for part 3830 continues to read as follows:

Authority: 18 U.S.C. 1001, 3571; 30 U.S.C. 22, 28, 28k, 242, 611; 31 U.S.C. 9701; 43 U.S.C. 2, 1201, 1212, 1457, 1474, 1740, 1744; 115 Stat. 414; Pub. L. No. 112–74, 125 Stat. 786.

Subpart D—BLM Service Charge and Fee Requirements

■ 2. Amend § 3830.21 by revising paragraphs (a) and (d) of the table to read as follows:

§ 3830.21 What are the different types of service charges and fees?

* * * * *

Transaction	Amount due per mining claim or site	Waiver available
(a) Recording a mining claim or site location (part 3833).	A total sum which includes: (1) The processing fee for notices of location found in the fee schedule in § 3000.12 of this chapter; (2) A one-time $37 location fee; and (3)(i) For lode claims, mill sites and tunnel sites, an initial $155 maintenance fee; or (ii) For placer claims, an initial $155 maintenance fee for each 20 acres of the placer claim or portion thereof.	No.

Transaction	Amount due per mining claim or site	Waiver available
* *	* * * *	*
(d) Maintaining a mining claim or site for one assessment year (part 3834).	(1) For lode claims, mill sites and tunnel sites, an annual maintenance fee of $155 must be paid on or before September 1 each year. (2) For placer claims, a $155 annual maintenance fee for each 20 acres of the placer claim or portion thereof must be paid on or before September 1 each year.	Yes. See part 3835.

Janice M. Schneider,

Assistant Secretary, Land and Minerals Management.

[FR Doc. 2014–15259 Filed 6–27–14; 8:45 am]

BILLING CODE 4310–84–P

Proposed Rules

Federal Register
Vol. 79, No. 125
Monday, June 30, 2014

This section of the FEDERAL REGISTER contains notices to the public of the proposed issuance of rules and regulations. The purpose of these notices is to give interested persons an opportunity to participate in the rule making prior to the adoption of the final rules.

DEPARTMENT OF TRANSPORTATION

Federal Aviation Administration

14 CFR Part 39

[Docket No. FAA–2014–0425; Directorate Identifier 2013–NM–180–AD]

RIN 2120–AA64

Airworthiness Directives; Airbus Airplanes

AGENCY: Federal Aviation Administration (FAA), DOT.

ACTION: Notice of proposed rulemaking (NPRM).

SUMMARY: We propose to supersede Airworthiness Directive (AD) 2012–06–19, for certain Airbus Model A330–201, –202, –203, –223, –243, –301, –302, –303, –321, –322, –323, –341, –342, and –343 airplanes; and Model A340–200 and –300 series airplanes. AD 2012–06–19 currently requires repetitive inspections of the main fitting and sliding tube of the nose landing gear (NLG) for defects, damage, and cracks; and corrective actions if necessary. Since we issued AD 2012–06–19, we have determined that additional airplanes are affected by the identified unsafe condition. This proposed AD would add airplanes to the applicability. This proposed AD would require an inspection of the part number and serial number of the NLG main fitting and NLG sliding tube; for affected parts, a magnetic particle inspection (MPI) for cracks, and flap peening and replacement if necessary. This proposed AD would also require, for certain parts, additional inspections for damage and cracking. We are proposing this AD to detect and correct cracks, defects, or damage of the main fitting or sliding tube, which could result in consequent NLG collapse.

DATES: We must receive comments on this proposed AD by August 14, 2014.

ADDRESSES: You may send comments by any of the following methods:

- *Federal eRulemaking Portal:* Go to *http://www.regulations.gov.* Follow the instructions for submitting comments.
- *Fax:* (202) 493–2251.
- *Mail:* U.S. Department of Transportation, Docket Operations, M–30, West Building Ground Floor, Room W12–140, 1200 New Jersey Avenue SE., Washington, DC 20590.
- *Hand Delivery:* U.S. Department of Transportation, Docket Operations, M–30, West Building Ground Floor, Room W12–140, 1200 New Jersey Avenue SE., Washington, DC, between 9 a.m. and 5 p.m., Monday through Friday, except Federal holidays.

For service information identified in this proposed AD, contact Airbus SAS, Airworthiness Office—EAL, 1 Rond Point Maurice Bellonte, 31707 Blagnac Cedex, France; telephone +33 5 61 93 36 96; fax +33 5 61 93 45 80; email *airworthiness.A330–A340@airbus.com;* Internet *http://www.airbus.com.* You may view this referenced service information at the FAA, Transport Airplane Directorate, 1601 Lind Avenue SW., Renton, WA. For information on the availability of this material at the FAA, call 425–227–1221.

Examining the AD Docket

You may examine the AD docket on the Internet at *http://www.regulations.gov* by searching for and locating Docket No. FAA–2014–0425; or in person at the Docket Operations office between 9 a.m. and 5 p.m., Monday through Friday, except Federal holidays. The AD docket contains this proposed AD, the regulatory evaluation, any comments received, and other information. The street address for the Docket Operations office (telephone (800) 647–5527) is in the **ADDRESSES** section. Comments will be available in the AD docket shortly after receipt.

FOR FURTHER INFORMATION CONTACT: Vladimir Ulyanov, Aerospace Engineer, International Branch, ANM–116, Transport Airplane Directorate, FAA, 1601 Lind Avenue SW., Renton, WA 98057–3356; telephone (425) 227–1138; fax (425) 227–1149.

SUPPLEMENTARY INFORMATION:

Comments Invited

We invite you to send any written relevant data, views, or arguments about this proposed AD. Send your comments to an address listed under the **ADDRESSES** section. Include ''Docket No. FAA–2014–0425; Directorate Identifier 2013–NM–180–AD'' at the beginning of your comments. We specifically invite comments on the overall regulatory, economic, environmental, and energy aspects of this proposed AD. We will consider all comments received by the closing date and may amend this proposed AD based on those comments.

We will post all comments we receive, without change, to *http://www.regulations.gov,* including any personal information you provide. We will also post a report summarizing each substantive verbal contact we receive about this proposed AD.

Discussion

On March 15, 2012, we issued AD 2012–06–19, Amendment 39–17000 (77 FR 22188, April 13, 2012). AD 2012–06–19 requires actions intended to address an unsafe condition on certain Airbus Model A330–201, –202, –203, –223, –243, –301, –302, –303, –321, –322, –323, –341, –342, and –343 airplanes; and Model A340–200 and –300 series airplanes.

Since we issued AD 2012–06–19, Amendment 39–17000 (77 FR 22188, April 13, 2012), we have determined that additional airplanes are affected by the identified unsafe condition.

The European Aviation Safety Agency (EASA), which is the Technical Agent for the Member States of the European Community, has issued EASA Airworthiness Directive 2013–0179, dated August 7, 2013 (referred to after this as the Mandatory Continuing Airworthiness Information, or ''the MCAI''), to correct an unsafe condition for certain Airbus Model A330–201, –202, –203, –223, –243, –301, –302, –303, –321, –322, –323, –341, –342, and –343 airplanes; and Model A340–200 and –300 series airplanes. The MCAI states:

> During the overhaul of two different Nose Landing Gear (NLG) units, cracks were found on the main fitting of one and the sliding tube of the other. Investigations concluded that the cracks initiated as a result of residual stress in the parts, following damage due to impact during towing incidents.
>
> A subsequent review of the reported incidents identified a specific group of NLG main fittings and sliding tubes that may have sustained impact damage as a result of towing incidents.
>
> This condition, if not detected and corrected could lead to NLG collapse.

To address this potential unsafe condition, EASA issued AD 2010–0034 [(*http://ad.easa.europa.eu/blob/easa_ad_2010_0034_Corrected_superseded.pdf/AD_2010-0034_1*) [which corresponds to FAA AD 2012–06–19, Amendment 39–17000 (77 FR 22188, April 13, 2012)] to require accomplishment of a one-time Magnetic Particles Inspection (MPI), followed by repetitive Detailed Visual Inspections (DVI) of the main fittings and sliding tubes of the affected NLG units identified by Part Number (P/N) and Serial Number (S/N) in the Applicability section of that AD and, depending on findings, accomplishment of applicable corrective actions.

Since that [EASA] AD was issued, it has been found necessary to address the issue at the level of NLG detail parts and no longer at NLG assembly level, as some detail parts have been transferred from an aeroplane to another. Airbus revised the applicable Service Bulletins (SB), which now list the affected NLG main fittings and sliding tubes.

For the reasons described above, this [EASA] AD retains [certain] requirements of EASA AD 2010–0034 which is superseded and requires [an inspection of the part number and serial number of the NLG main fitting and NLG sliding tube, and for affected parts,] a one-time MPI [for cracks], followed by repetitive DVI [for cracking, damage to paint, sealant, cadmium, and base metal] of the affected NLG main fittings and sliding tubes and, depending on inspection results, accomplishment of corrective actions [e.g., flap peening and replacing cracked parts]. This AD also extends the applicability to A330 freighters.

You may examine the MCAI in the AD docket on the Internet at *http://www.regulations.gov* by searching for and locating Docket No. FAA–2014–0425.

Relevant Service Information

Airbus has issued Service Bulletin A330–32–3233, Revision 02, dated January 27, 2014; and Service Bulletin A340–32–4275, Revision 01, dated July 5, 2013. The actions described in this service information are intended to correct the unsafe condition identified in the MCAI.

FAA's Determination and Requirements of This Proposed AD

This product has been approved by the aviation authority of another country, and is approved for operation in the United States. Pursuant to our bilateral agreement with the State of Design Authority, we have been notified of the unsafe condition described in the MCAI and service information referenced above. We are proposing this AD because we evaluated all pertinent information and determined an unsafe condition exists and is likely to exist or develop on other products of the same type design.

Costs of Compliance

We estimate that this proposed AD affects 92 airplanes of U.S. registry.

We estimate the following costs to comply with this proposed AD:

The actions that are required by AD 2012–06–19, Amendment 39–17000 (77 FR 22188, April 13, 2012), and retained in this proposed AD take about 4 work-hours per product, at an average labor rate of $85 per work-hour. Required parts cost about $0 per product. Based on these figures, the estimated cost of the actions that are required by AD 2012–06–19 is $31,280 per product.

We also estimate that it would take about 10 work-hours per product to comply with the basic requirements of this proposed AD. The average labor rate is $85 per work-hour. Required parts would cost about $0 per product. Based on these figures, we estimate the cost of this proposed AD on U.S. operators to be $78,200, or $850 per product.

In addition, we estimate that any necessary follow-on actions would take about 114 work-hours and require parts costing $435,000, for a cost of $444,690 per product. We have no way of determining the number of aircraft that might need these actions.

Authority for This Rulemaking

Title 49 of the United States Code specifies the FAA's authority to issue rules on aviation safety. Subtitle I, section 106, describes the authority of the FAA Administrator. ''Subtitle VII: Aviation Programs,'' describes in more detail the scope of the Agency's authority.

We are issuing this rulemaking under the authority described in ''Subtitle VII, Part A, Subpart III, Section 44701: General requirements.'' Under that section, Congress charges the FAA with promoting safe flight of civil aircraft in air commerce by prescribing regulations for practices, methods, and procedures the Administrator finds necessary for safety in air commerce. This proposed regulation is within the scope of that authority because it addresses an unsafe condition that is likely to exist or develop on products identified in this rulemaking action.

Regulatory Findings

We determined that this proposed AD would not have federalism implications under Executive Order 13132. This proposed AD would not have a substantial direct effect on the States, on the relationship between the national Government and the States, or on the distribution of power and responsibilities among the various levels of government.

For the reasons discussed above, I certify this proposed regulation:

1. Is not a ''significant regulatory action'' under Executive Order 12866;
2. Is not a ''significant rule'' under the DOT Regulatory Policies and Procedures (44 FR 11034, February 26, 1979);
3. Will not affect intrastate aviation in Alaska; and
4. Will not have a significant economic impact, positive or negative, on a substantial number of small entities under the criteria of the Regulatory Flexibility Act.

List of Subjects in 14 CFR Part 39

Air transportation, Aircraft, Aviation safety, Incorporation by reference, Safety.

The Proposed Amendment

Accordingly, under the authority delegated to me by the Administrator, the FAA proposes to amend 14 CFR part 39 as follows:

PART 39—AIRWORTHINESS DIRECTIVES

■ 1. The authority citation for part 39 continues to read as follows:

Authority: 49 U.S.C. 106(g), 40113, 44701.

§ 39.13 [Amended]

■ 2. The FAA amends § 39.13 by removing Airworthiness Directive (AD) 2012–06–19, Amendment 39–17000 (77 FR 22188, April 13, 2012), and adding the following new AD:

Airbus: Docket No. FAA–2014–0425; Directorate Identifier 2013–NM–180–AD.

(a) Comments Due Date

We must receive comments by August 14, 2014.

(b) Affected ADs

This AD supersedes AD 2012–06–19, Amendment 39–17000 (77 FR 22188, April 13, 2012).

(c) Applicability

This AD applies to Airbus Model A330–201, –202, –203, –223, –223F –243, –243F, –301, –302, –303, –321, –322, –323, –341, –342, and –343 airplanes; and Model A340–211, –212, –213, –311, –312, and –313 airplanes; certificated in any category; all manufacturer serial numbers.

(d) Subject

Air Transport Association (ATA) of America Code 32, Landing Gear.

(e) Reason

This AD was prompted by reports of a cracked nose landing gear (NLG) main fitting and sliding tube during overhaul of the NLGs following damage due to impact during towing incidents. We are issuing this AD to detect and correct cracks, defects, or damage of the main fitting or sliding tube, which could result in consequent NLG collapse.

(f) Compliance

Comply with this AD within the compliance times specified, unless already done.

(g) Retained Detailed Inspection and Corrective Actions

This paragraph restates the requirements of paragraph (g) of AD 2012–06–19, Amendment 39–17000 (77 FR 22188, April 13, 2012) with revised service information. For Model A330–201, –202, –203, –223, –243, –301, –302, –303, –321, –322, –323, –341, –342, and –343 airplanes; and Model A340–211, –212, –213, –311, –312, and –313 airplanes; if fitted with the NLG identified in table 1 to paragraph (g) of this AD: Within 900 flight hours after April 30, 2012 (the effective date of AD 2012–06–19), do a detailed inspection of the NLG main fitting and sliding tube for any cracks, defects, and damage of the paint or surface protection, including paint removal and cracking of the surface treatment. Before further flight after doing the detailed inspection of the NLG, remove the labels, paint, surface protection coatings, and cadmium from the NLG main fitting; do a detailed inspection for any damage to the surface that will impair the magnetic particle inspection (MPI); and, if any defects are found, before further flight, remove any defects by polishing. Do all actions specified in paragraph (g) of this AD in accordance with the Accomplishment Instructions of the applicable service information specified in paragraph (g)(1) or (g)(2) of this AD.

(1) For Model A330 airplanes: Airbus Mandatory Service Bulletin A330–32–3233, dated October 22, 2009; or Airbus Service Bulletin A330–32–3233, Revision 02, dated January 27, 2014.

(2) For Model A340 airplanes: Airbus Mandatory Service Bulletin A340–32–4275, dated October 22, 2009; or Airbus Service Bulletin A340–32–4275, Revision 01, dated July 5, 2013.

TABLE 1 TO PARAGRAPH (g) OF THIS AD—APPLICABLE NLG AND SERIAL NUMBERS

Part No.	Serial No.
D23285200	B2
D23285101–7	B58
D23285101–10	B75
D23581100–1	B124
D23581100–1	B159
D23581100–7	B386
D23581100–7	B398
D23581100–7	B400
D23581100–7	B403

(h) Retained Magnetic Particle Inspection

This paragraph restates the requirements of paragraph (h) of AD 2012–06–19, Amendment 39–17000 (77 FR 22188, April 13, 2012), with revised service information. Before further flight after doing the actions required in paragraph (g) of this AD: Do an MPI for cracking of the NLG main fitting and sliding tube, in accordance with the Accomplishment Instructions of the applicable service information specified in paragraph (g)(1) or (g)(2) of this AD.

(1) If no crack is detected during the MPI required by paragraph (h) of this AD: Before further flight, flap peen the inspected area where the paint and cadmium has been removed, and replace the protective coatings, in accordance with the Accomplishment Instructions of the applicable service information specified in paragraph (g)(1) or (g)(2) of this AD.

(2) If any crack is detected during the MPI required by paragraph (h) of this AD: Before further flight, replace the damaged part with a new or serviceable part, in accordance with the Accomplishment Instructions of the applicable service information specified in paragraph (g)(1) or (g)(2) of this AD.

(i) New Requirement of This AD: Identification

Within 1,000 flight hours after the effective date of this AD, identify the part number and serial number of the NLG main fitting and NLG sliding tube, in accordance with the Accomplishment Instructions of Airbus Service Bulletin A330–32–3233, Revision 02, dated January 27, 2014; or Airbus Service Bulletin A340–32–4275, Revision 01, dated July 5, 2013; as applicable. A review of airplane maintenance records is acceptable in lieu of this identification if the part number and the serial number of the NLG main fitting and NLG sliding tube can be conclusively determined from that review.

(j) New Requirement of This AD: MPI

If, during the identification required by paragraph (i) of this AD, it is determined any NLG main fitting or NLG sliding tube is installed and the fitting or tube has a part number and serial number listed in Airbus Service Bulletin A330–32–3233, Revision 02, dated January 27, 2014; or Airbus Service Bulletin A340–32–4275, Revision 01, dated July 5, 2013; as applicable: Within 1,000 flight hours after the effective date of this AD, do an MPI for cracks of the affected parts, in accordance with the Accomplishment Instructions of Airbus Service Bulletin A330–32–3233, Revision 02, dated January 27, 2014; or Airbus Service Bulletin A340–32–4275, Revision 01, dated July 5, 2013; as applicable. Accomplishing the MPI required by this paragraph terminates the inspections required by paragraphs (g) and (h) of this AD.

(1) If any crack is detected during the MPI required by paragraph (j) of this AD, before further flight, replace any cracked part (NLG main fitting and NLG sliding tube) with a serviceable one, in accordance with the Accomplishment Instructions of Airbus Service Bulletin A330–32–3233, Revision 02, dated January 27, 2014; or Airbus Service Bulletin A340–32–4275, Revision 01, dated July 5, 2013; as applicable.

(2) If no crack is detected during the MPI required by paragraph (j) of this AD, before further flight, do a flap peening to introduce compressive residual stress and corrosion protection, in accordance with the Accomplishment Instructions of Airbus Service Bulletin A330–32–3233, Revision 02, dated January 27, 2014; or Airbus Service Bulletin A340–32–4275, Revision 01, dated July 5, 2013; as applicable.

(k) New Requirement of This AD: Detailed Inspection

Within 900 flight hours after doing the flap peening required by paragraph (j)(2) of this AD, do a detailed inspection for damage to paint, damage to the sealant around the labels, damage to the cadmium or base metal, and for cracking of the affected parts; in accordance with the Accomplishment Instructions of Airbus Service Bulletin A330–32–3233, Revision 02, dated January 27, 2014; or Airbus Service Bulletin A340–32–4275, Revision 01, dated July 5, 2013; as applicable. Repeat the inspection thereafter at intervals not to exceed 900 flight hours.

(1) If damage to the paint, damage to the sealant around the labels, or damage to the cadmium or base metal, is detected during any detailed inspection required by paragraph (k) of this AD, before further flight, do an MPI for cracking of the affected parts, in accordance with the Accomplishment Instructions of Airbus Service Bulletin A330–32–3233, Revision 02, dated January 27, 2014; or Airbus Service Bulletin A340–32–4275, Revision 01, dated July 5, 2013; as applicable.

(2) If any cracking is detected during any inspection required by paragraph (k) or (k)(1) of this AD, before further flight, replace any cracked part with a serviceable part, in accordance with the Accomplishment Instructions of Airbus Service Bulletin A330–32–3233, Revision 02, dated January 27, 2014; or Airbus Service Bulletin A340–32–4275, Revision 01, dated July 5, 2013; as applicable.

(l) Terminating Action

Replacement of a part as required by paragraph (j)(1) or (k)(2) of this AD is terminating action for the repetitive detailed inspections required by paragraph (k) of this AD for that part, provided that the part number and serial number of the replacement part is not listed in Airbus Service Bulletin A330–32–3233, Revision 02, dated January 27, 2014; or Airbus Service Bulletin A340–32–4275, Revision 01, dated July 5, 2013; as applicable.

(m) Parts Installation Limitation

As of the effective date of this AD, installation of an NLG main fitting or NLG sliding tube having a part number and serial number listed in Airbus Service Bulletin A330–32–3233, Revision 02, dated January 27, 2014; or Airbus Service Bulletin A340–32–4275, Revision 01, dated July 5, 2013; as applicable; is allowed, provided that the NLG main fitting and NLG sliding tube has not accumulated more than 900 flight hours since the most recent inspection accomplished in accordance with the Accomplishment Instructions of Airbus Service Bulletin A330–32–3233, Revision 02, dated January 27, 2014; or Airbus Service Bulletin A340–32–4275, Revision 01, dated July 5, 2013; as applicable.

(n) Credit for Previous Actions

This paragraph provides credit for inspections required by paragraphs (j) and (k) of this AD and the flap peening required by paragraph (j)(2) of this AD, if those actions were performed before the effective date of

this AD using the service information specified in paragraph (n)(1), (n)(2), or (n)(3) of this AD.

(1) Airbus Service Bulletin A330–32–3233, dated October 22, 2009.

(2) Airbus Service Bulletin A330–32–3233, Revision 01, dated July 5, 2013.

(3) Airbus Service Bulletin A340–32–4275, dated October 22, 2009.

(o) Other FAA AD Provisions

The following provisions also apply to this AD:

(1) Alternative Methods of Compliance (AMOCs): The Manager, International Branch, ANM–116, Transport Airplane Directorate, FAA, has the authority to approve AMOCs for this AD, if requested using the procedures found in 14 CFR 39.19. In accordance with 14 CFR 39.19, send your request to your principal inspector or local Flight Standards District Office, as appropriate. If sending information directly to the International Branch, send it to ATTN: Vladimir Ulyanov, Aerospace Engineer, International Branch, ANM–116, Transport Airplane Directorate, FAA, 1601 Lind Avenue SW., Renton, WA 98057–3356; telephone (425) 227–1138; fax (425) 227–1149. Information may be emailed to: *9-ANM-116-AMOC-REQUESTS@faa.gov.* Before using any approved AMOC, notify your appropriate principal inspector, or lacking a principal inspector, the manager of the local flight standards district office/certificate holding district office. The AMOC approval letter must specifically reference this AD.

(2) Airworthy Product: For any requirement in this AD to obtain corrective actions from a manufacturer, use these actions if they are FAA-approved. Corrective actions are considered FAA-approved if they were approved by the State of Design Authority (or its delegated agent, or by the Design Approval Holder with a State of Design Authority's design organization approval, as applicable). You are required to ensure the product is airworthy before it is returned to service.

(p) Related Information

(1) Refer to Mandatory Continuing Airworthiness Information (MCAI) European Aviation Safety Agency Airworthiness Directive 2013–0179, dated August 7, 2013, for related information. This MCAI may be found in the AD docket on the Internet at *http://www.regulations.gov* by searching for and locating Docket No. FAA–2014–0425.

(2) For service information identified in this AD, contact Airbus SAS, Airworthiness Office—EAL, 1 Rond Point Maurice Bellonte, 31707 Blagnac Cedex, France; telephone +33 5 61 93 36 96; fax +33 5 61 93 45 80; email *airworthiness.A330-A340@airbus.com*; Internet *http://www.airbus.com.* You may view this service information at the FAA, Transport Airplane Directorate, 1601 Lind Avenue SW., Renton, WA. For information on the availability of this material at the FAA, call 425–227–1221.

Issued in Renton, Washington, on June 19, 2014.

Michael Kaszycki,

Acting Manager, Transport Airplane Directorate, Aircraft Certification Service.

[FR Doc. 2014–15254 Filed 6–27–14; 8:45 am]

BILLING CODE 4910–13–P

DEPARTMENT OF TRANSPORTATION

Federal Aviation Administration

14 CFR Part 39

[Docket No. FAA–2014–0423; Directorate Identifier 2013–NM–233–AD]

RIN 2120–AA64

Airworthiness Directives; The Boeing Company Airplanes

AGENCY: Federal Aviation Administration (FAA), DOT.

ACTION: Notice of proposed rulemaking (NPRM).

SUMMARY: We propose to adopt a new airworthiness directive (AD) for certain The Boeing Company Model DC–10–10, DC–10–10F, DC–10–30, DC–10–30F (KC–10A and KDC–10), DC–10–40, MD–10–10F, and MD–10–30F airplanes. This proposed AD was prompted by an evaluation by the design approval holder (DAH) indicating that the forward cargo compartment frames are subject to widespread fatigue damage (WFD). This proposed AD would require an inspection of the attachment holes at the forward cargo compartment frames and the cargo liner for cracking, and repair if necessary. This proposed AD would also require installing new oversized fasteners in the forward cargo compartment frames. We are proposing this AD to prevent fatigue cracking of the forward cargo compartment frames, which could result in loss of the fail-safe structural integrity of the airplane.

DATES: We must receive comments on this proposed AD by August 14, 2014.

ADDRESSES: You may send comments, using the procedures found in 14 CFR 11.43 and 11.45, by any of the following methods:

- *Federal eRulemaking Portal:* Go to *http://www.regulations.gov*. Follow the instructions for submitting comments.
- *Fax:* 202–493–2251.
- *Mail:* U.S. Department of Transportation, Docket Operations, M–30, West Building Ground Floor, Room W12–140, 1200 New Jersey Avenue SE., Washington, DC 20590.
- *Hand Delivery:* Deliver to Mail address above between 9 a.m. and 5 p.m., Monday through Friday, except Federal holidays.

For service information identified in this proposed AD, contact Boeing Commercial Airplanes, Attention: Data & Services Management, 3855 Lakewood Boulevard, MC D800–0019, Long Beach, CA 90846–0001; telephone 206–544–5000, extension 2; fax 206–766–5683; Internet *https://www.myboeingfleet.com.* You may view this referenced service information at the FAA, Transport Airplane Directorate, 1601 Lind Avenue SW., Renton, WA 98057–3356. For information on the availability of this material at the FAA, call 425–227–1221.

Examining the AD Docket

You may examine the AD docket on the Internet at *http://www.regulations.gov* by searching for and locating Docket No. FAA–2014–0423; or in person at the Docket Management Facility between 9 a.m. and 5 p.m., Monday through Friday, except Federal holidays. The AD docket contains this proposed AD, the regulatory evaluation, any comments received, and other information. The street address for the Docket Office (phone: 800–647–5527) is in the **ADDRESSES** section. Comments will be available in the AD docket shortly after receipt.

FOR FURTHER INFORMATION CONTACT: Nenita Odesa, Aerospace Engineer, Airframe Branch, ANM–120L, Los Angeles Aircraft Certification Office (ACO), FAA, 3960 Paramount Boulevard, Lakewood, CA 90712–4137; phone: 562–627–5234; fax: 562–627–5210; email: *nenita.odesa@faa.gov*.

SUPPLEMENTARY INFORMATION:

Comments Invited

We invite you to send any written relevant data, views, or arguments about this proposal. Send your comments to an address listed under the **ADDRESSES** section. Include ''Docket No. FAA–2014–0423; Directorate Identifier 2013–NM–233–AD'' at the beginning of your comments. We specifically invite comments on the overall regulatory, economic, environmental, and energy aspects of this proposed AD. We will consider all comments received by the closing date and may amend this proposed AD because of those comments.

We will post all comments we receive, without change, to *http://www.regulations.gov*, including any personal information you provide. We will also post a report summarizing each substantive verbal contact we receive about this proposed AD.

Discussion

Structural fatigue damage is progressive. It begins as minute cracks, and those cracks grow under the action of repeated stresses. This can happen because of normal operational conditions and design attributes, or because of isolated situations or incidents such as material defects, poor fabrication quality, or corrosion pits, dings, or scratches. Fatigue damage can occur locally, in small areas or structural design details, or globally. Global fatigue damage is general degradation of large areas of structure with similar structural details and stress levels. Multiple-site damage is global damage that occurs in a large structural element such as a single rivet line of a lap splice joining two large skin panels. Global damage can also occur in multiple elements such as adjacent frames or stringers. Multiple-site-damage and multiple-element-damage cracks are typically too small initially to be reliably detected with normal inspection methods. Without intervention, these cracks will grow, and eventually compromise the structural integrity of the airplane, in a condition known as widespread fatigue damage (WFD). As an airplane ages, WFD will likely occur, and will certainly occur if the airplane is operated long enough without any intervention.

The FAA's WFD final rule (75 FR 69746, November 15, 2010) became effective on January 14, 2011. The WFD rule requires certain actions to prevent structural failure due to WFD throughout the operational life of certain existing transport category airplanes and all of these airplanes that will be certificated in the future. For existing and future airplanes subject to the WFD rule, the rule requires that DAHs establish a limit of validity (LOV) of the engineering data that support the structural maintenance program. Operators affected by the WFD rule may not fly an airplane beyond its LOV, unless an extended LOV is approved.

The WFD rule (75 FR 69746, November 15, 2010) does not require identifying and developing maintenance actions if the DAHs can show that such actions are not necessary to prevent WFD before the airplane reaches the LOV. Many LOVs, however, do depend on accomplishment of future maintenance actions. As stated in the WFD rule, any maintenance actions necessary to reach the LOV will be mandated by airworthiness directives through separate rulemaking actions.

In the context of WFD, this action is necessary to enable DAHs to propose LOVs that allow operators the longest operational lives for their airplanes, and still ensure that WFD will not occur. This approach allows for an implementation strategy that provides flexibility to DAHs in determining the timing of service information development (with FAA approval), while providing operators with certainty regarding the LOV applicable to their airplanes.

This proposed AD was prompted by cracking that occurred during a full-scale fatigue test airplane during the certification process. Such cracking could occur in the active airplane fleet prior to the fleet reaching its LOV. We are proposing this AD to prevent fatigue cracking of the forward cargo compartment frames, which could result in loss of the fail safe structural integrity of the airplane.

Relevant Service Information

We reviewed Boeing Service Bulletin DC10–53–182, dated June 28, 2013. For information on the procedures and compliance times, see this service information at *http://www.regulations.gov* by searching for and locating Docket No. FAA–2014–0423.

FAA's Determination

We are proposing this AD because we evaluated all the relevant information and determined the unsafe condition described previously is likely to exist or develop in other products of these same type designs.

Proposed AD Requirements

This proposed AD would require accomplishing an inspection of the attachment holes at the forward cargo compartment frames and the cargo liner for cracking, and repair if necessary. This proposed AD would also require installing new oversized fasteners in the forward cargo compartment frames. These actions are specified in the service information described previously, except as discussed under ''Differences Between this Proposed AD and the Service Information.''

Differences Between This Proposed AD and the Service Information

Boeing Service Bulletin DC10–53–182, dated June 28, 2013, specifies to contact the manufacturer for instructions on how to repair cracks detected during the high frequency eddy current inspection, but this proposed AD would require that those actions be done in one of the following ways:

- In accordance with a method that we approve; or
- Using data that meet the certification basis of the airplane, and that have been approved by the Boeing Commercial Airplanes Organization Designation Authorization (ODA) whom we have authorized to make those findings.

Explanation of Compliance Time

The compliance time for the inspection specified in this proposed AD for addressing WFD was established to ensure that discrepant structure is modified before WFD develops in airplanes. Standard inspection techniques cannot be relied on to detect WFD before it becomes a hazard to flight. We will not grant any extensions of the compliance time to complete any AD-mandated service bulletin related to WFD without extensive new data that would substantiate and clearly warrant such an extension.

Costs of Compliance

We estimate that this proposed AD affects 25 airplanes of U.S. registry.

We estimate the following costs to comply with this proposed AD:

ESTIMATED COSTS

Action	Labor cost	Parts cost	Cost per product	Cost on U.S. operators
Inspection	Up to 19 work-hours × $85 per hour = $1,615	$0	Up to $1,615	Up to $40,375.
Modification	Up to 6 work-hours × $85 per hour = $510	Up to $801	Up to $1,311	Up to $32,775.

We have received no definitive data that would enable us to provide cost estimates for the on-condition actions specified in this AD.

Authority for This Rulemaking

Title 49 of the United States Code specifies the FAA's authority to issue rules on aviation safety. Subtitle I, section 106, describes the authority of the FAA Administrator. Subtitle VII: Aviation Programs, describes in more detail the scope of the Agency's authority.

We are issuing this rulemaking under the authority described in Subtitle VII, Part A, Subpart III, Section 44701: ''General requirements.'' Under that section, Congress charges the FAA with promoting safe flight of civil aircraft in air commerce by prescribing regulations for practices, methods, and procedures the Administrator finds necessary for safety in air commerce. This proposed regulation is within the scope of that authority because it addresses an unsafe condition that is likely to exist or develop on products identified in this rulemaking action.

Regulatory Findings

We determined that this proposed AD would not have federalism implications under Executive Order 13132. This proposed AD would not have a substantial direct effect on the States, on the relationship between the national Government and the States, or on the distribution of power and responsibilities among the various levels of government.

For the reasons discussed above, I certify this proposed regulation:

(1) Is not a ''significant regulatory action'' under Executive Order 12866,

(2) Is not a ''significant rule'' under the DOT Regulatory Policies and Procedures (44 FR 11034, February 26, 1979),

(3) Will not affect intrastate aviation in Alaska, and

(4) Will not have a significant economic impact, positive or negative, on a substantial number of small entities under the criteria of the Regulatory Flexibility Act.

List of Subjects in 14 CFR Part 39

Air transportation, Aircraft, Aviation safety, Incorporation by reference, Safety.

The Proposed Amendment

Accordingly, under the authority delegated to me by the Administrator, the FAA proposes to amend 14 CFR part 39 as follows:

PART 39—AIRWORTHINESS DIRECTIVES

■ 1. The authority citation for part 39 continues to read as follows:

Authority: 49 U.S.C. 106(g), 40113, 44701.

§ 39.13 [Amended]

■ 2. The FAA amends § 39.13 by adding the following new airworthiness directive (AD):

The Boeing Company: Docket No. FAA–2014–0423; Directorate Identifier 2013–NM–233–AD.

(a) Comments Due Date

We must receive comments by August 14, 2014.

(b) Affected ADs

None.

(c) Applicability

This AD applies to The Boeing Company Model DC–10–10, DC–10–10F, DC–10–30, DC–10–30F (KC–10A and KDC–10), DC–10–40, MD–10–10F, and MD–10–30F airplanes, certificated in any category, identified in Boeing Service Bulletin DC10–53–182, dated June 28, 2013.

(d) Subject

Air Transport Association (ATA) of America Code 53, Fuselage.

(e) Unsafe Condition

This AD was prompted by an evaluation by the design approval holder (DAH) indicating that the forward cargo compartment frames are subject to widespread fatigue damage (WFD). We are issuing this AD to prevent fatigue cracking of the forward cargo compartment frames, which could result in loss of the fail-safe structural integrity of the airplane.

(f) Compliance

Comply with this AD within the compliance times specified, unless already done.

(g) Inspection

Prior to the accumulation of 30,000 total flight cycles, or within 72 months after the effective date of this AD, whichever occurs later: Do a high frequency eddy current inspection for cracking of the attachment holes at the forward cargo compartment frames and the cargo liner, in accordance with the Accomplishment Instructions of Boeing Service Bulletin DC10–53–182, dated June 28, 2013. If any crack is found, before further flight, repair using a method approved in accordance with the procedures specified in paragraph (i) of this AD.

(h) Installation of New Fasteners

If no cracking is found during the inspection required by paragraph (g) of this AD: Before further flight, install new oversized fasteners to attach the forward cargo liner to the forward cargo compartment frame, in accordance with the Accomplishment Instructions of Boeing Service Bulletin DC10–53–182, dated June 28, 2013.

(i) Alternative Methods of Compliance (AMOCs)

(1) The Manager, Los Angeles Aircraft Certification Office (ACO), FAA, has the authority to approve AMOCs for this AD, if requested using the procedures found in 14 CFR 39.19. In accordance with 14 CFR 39.19, send your request to your principal inspector or local Flight Standards District Office, as appropriate. If sending information directly to the manager of the ACO, send it to the attention of the person identified in paragraph (j)(1) of this AD. Information may be emailed to: *9-ANM-LAACO-AMOC-REQUESTS@faa.gov.*

(2) Before using any approved AMOC, notify your appropriate principal inspector, or lacking a principal inspector, the manager of the local flight standards district office/certificate holding district office.

(3) An AMOC that provides an acceptable level of safety may be used for any repair required by this AD if it is approved by the Boeing Commercial Airplanes Organization Designation Authorization (ODA) that has been authorized by the Manager, Los Angeles ACO to make those findings. For a repair method to be approved, the repair must meet the certification basis of the airplane, and the approval must specifically refer to this AD.

(j) Related Information

(1) For more information about this AD, contact Nenita Odesa, Aerospace Engineer, Airframe Branch, ANM–120L, Los Angeles Aircraft Certification Office (ACO), FAA, 3960 Paramount Boulevard, Lakewood, CA 90712–4137; phone: 562–627–5234; fax: 562–627–5210; email: *nenita.odesa@faa.gov*.

(2) For service information identified in this AD, contact Boeing Commercial Airplanes, Attention: Data & Services Management, 3855 Lakewood Boulevard, MC D800–0019, Long Beach, CA 90846–0001; telephone 206–544–5000, extension 2; fax 206–766–5683; Internet *https://www.myboeingfleet.com.* You may view this referenced service information at the FAA, Transport Airplane Directorate, 1601 Lind Avenue SW., Renton, WA 98057–3356. For information on the availability of this material at the FAA, call 425–227–1221.

Issued in Renton, Washington on June 19, 2014.

Michael Kaszycki,

Acting Manager, Transport Airplane Directorate, Aircraft Certification Service.

[FR Doc. 2014–15248 Filed 6–27–14; 8:45 am]

BILLING CODE 4910–13–P

DEPARTMENT OF TRANSPORTATION

Federal Aviation Administration

14 CFR Part 39

[Docket No. FAA–2014–0346; Directorate Identifier 2014–NM–010–AD]

RIN 2120–AA64

Airworthiness Directives; The Boeing Company Airplanes

AGENCY: Federal Aviation Administration (FAA), DOT.

ACTION: Notice of proposed rulemaking (NPRM).

SUMMARY: We propose to adopt a new airworthiness directive (AD) for certain The Boeing Company Model 737–100, –200, –200C, –300, –400, and –500 series airplanes. This proposed AD was prompted by reports of cracks in fuselage frames, and a report of a missing strap that was not installed on a fuselage frame during production. This proposed AD would require an inspection to determine if the strap adjacent to a certain stringer is installed, and repair if missing; repetitive inspections of the frame for cracking or a severed frame web; and related investigative and corrective actions if necessary. This proposed AD also provides optional actions to terminate certain repetitive inspections. We are proposing this AD to detect and correct missing fuselage frame straps and frame cracking that can result in severed frames. Continued operation of the airplane with multiple adjacent severed frames, or the combination of a severed frame and fuselage skin chemical mill cracks, can result in uncontrolled decompression of the airplane.

DATES: We must receive comments on this proposed AD by August 14, 2014.

ADDRESSES: You may send comments, using the procedures found in 14 CFR 11.43 and 11.45, by any of the following methods:

- *Federal eRulemaking Portal:* Go to *http://www.regulations.gov.* Follow the instructions for submitting comments.
- *Fax:* 202–493–2251.
- *Mail:* U.S. Department of Transportation, Docket Operations, M–30, West Building Ground Floor, Room W12–140, 1200 New Jersey Avenue SE., Washington, DC 20590.
- *Hand Delivery:* Deliver to Mail address above between 9 a.m. and 5 p.m., Monday through Friday, except Federal holidays.

For service information identified in this AD, contact Boeing Commercial Airplanes, Attention: Data & Services Management, P.O. Box 3707, MC 2H–65, Seattle, WA 98124–2207; telephone 206–544–5000, extension 1; fax 206–766–5680; Internet *https://www.myboeingfleet.com.* You may view this referenced service information at the FAA, Transport Airplane Directorate, 1601 Lind Avenue SW., Renton, WA. For information on the availability of this material at the FAA, call 425–227–1221.

Examining the AD Docket

You may examine the AD docket on the Internet at *http://www.regulations.gov* by searching for and locating Docket No. FAA–2014–0346; or in person at the Docket Management Facility between 9 a.m. and 5 p.m., Monday through Friday, except Federal holidays. The AD docket contains this proposed AD, the regulatory evaluation, any comments received, and other information. The street address for the Docket Office (phone: 800–647–5527) is in the **ADDRESSES** section. Comments will be available in the AD docket shortly after receipt.

FOR FURTHER INFORMATION CONTACT: Alan Pohl, Aerospace Engineer, Airframe Branch, ANM–120S, FAA, Seattle Aircraft Certification Office, 1601 Lind Avenue SW., Renton, WA 98057–3356; phone: 425–917–6450; fax: 425–917–6590; email: *alan.pohl@faa.gov.*

SUPPLEMENTARY INFORMATION:

Comments Invited

We invite you to send any written relevant data, views, or arguments about this proposal. Send your comments to an address listed under the **ADDRESSES** section. Include ''Docket No. FAA–2014–0346; Directorate Identifier 2014–NM–010–AD'' at the beginning of your comments. We specifically invite comments on the overall regulatory, economic, environmental, and energy aspects of this proposed AD. We will consider all comments received by the closing date and may amend this proposed AD because of those comments.

We will post all comments we receive, without change, to *http://www.regulations.gov*, including any personal information you provide. We will also post a report summarizing each substantive verbal contact we receive about this proposed AD.

Discussion

We have received reports of fuselage frame cracking, and a report of a missing strap that was not installed on a fuselage frame during production. One report was a crack in the frame at station 328 and a crack that severed the frame at station 360 on the right side of an airplane that had 59,756 total flight cycles. The frame web and the failsafe chord were completely severed.

We have received ten reports of cracks in the frames at station 328 between stringers S–20R and S–21R on Model 737–200, 737–300, and 737–500 series airplanes that had accumulated between 43,581 and 73,655 total flight cycles. These cracks were in the frame web at an open tool hole, in the frame web at the end fastener in the inner chord, and in the frame web notch. The cracks were from 0.3 inch to 3.0 inches long.

We have also received 14 reports of cracks in the frames at station 360 between stringers S–19R and S–21R on Model 737–200 and 737–300 series airplanes that had accumulated between 42,183 and 66,588 total flight cycles. These cracks were in the frame web at an open tool hole, in the frame web at an insulation blanket stud hole, in the frame web at an end fastener in the doubler, and in the inner flange at the end fastener in the doubler. The cracks were from 2.5 inches long to cracks that severed the frame web and fail-safe chord.

We have received a report of three cracks in the frame at station 380 between stringers S–18R and S–20R on a Model 737–300 series airplane with 32,218 total flight cycles. Cracks were in the frame inner flange at fasteners common to the bulkhead support angle. One of the three cracks was also in the doubler.

We have received a report of a strap that was not installed on the frame at station 312 adjacent to stringer S–22R on a Model 737–400 series airplane with 24,037 total flight cycles. Investigation of the drawings determined that this was an incorrect frame configuration and that the strap should have been installed.

Missing fuselage frame straps and frame cracking can result in severed frames. Continued operation of the airplane with multiple adjacent severed frames, or the combination of a severed frame and fuselage skin chemical mill cracks, can result in uncontrolled decompression of the airplane.

Relevant Service Information

We reviewed Boeing Alert Service Bulletin 737–53A1323, dated December 6, 2013. For information on the procedures and compliance times, see this service information at *http://www.regulations.gov* by searching for and locating Docket No. FAA 2014–0346.

FAA's Determination

We are proposing this AD because we evaluated all the relevant information and determined the unsafe condition described previously is likely to exist or develop in other products of the same type design.

Proposed AD Requirements

This proposed AD would require an inspection to determine if the strap adjacent to a certain stringer is installed, and repair if missing; repetitive inspections of the frame for cracking or a severed frame web; and related investigative and corrective actions if necessary. This proposed AD also provides optional actions to terminate the repetitive inspections.

The phrase ''related investigative actions'' is used in this proposed AD. ''Related investigative actions'' are follow-on actions that (1) are related to the primary actions, and (2) further investigate the nature of any condition found. Related investigative actions in an AD could include, for example, inspections.

The phrase ''corrective actions'' is used in this proposed AD. ''Corrective actions'' are actions that correct or address any condition found. Corrective actions in an AD could include, for example, repairs.

Differences Between This Proposed AD and the Service Information

Boeing Alert Service Bulletin 737–53A1323, dated December 6, 2013, specifies to contact the manufacturer for instructions on how to repair certain conditions, but this proposed AD would require repairing those conditions in one of the following ways:

- In accordance with a method that we approve; or
- Using data that meet the certification basis of the airplane, and that have been approved by the Boeing Commercial Airplanes Organization Designation Authorization (ODA) whom we have authorized to make those findings.

Tables 13 through 15 in paragraph 1.E., ''Compliance,'' of Boeing Alert Service Bulletin 737–53A1323, dated December 6, 2013, specify post-modification inspections at certain locations, which may be used in support of compliance with section 121.1109(c)(2) or 129.109(b)(2) of the Federal Aviation Regulations (14 CFR 121.1109(c)(2) or 129.109(b)(2)). However, this NPRM does not propose to require those post-modification inspections. This difference has been coordinated with Boeing.

Costs of Compliance

We estimate that this proposed AD affects 417 airplanes of U.S. registry.

We estimate the following costs to comply with this proposed AD:

ESTIMATED COSTS

Action	Labor cost	Parts cost	Cost per product	Cost on U.S. operators
Inspections	21 work-hours × $85 per hour = $1,785 per inspection cycle.	$0	$1,785 per inspection cycle.	$744,345 per inspection cycle.

We have received no definitive data that would enable us to provide cost estimates for certain on-condition actions specified in this proposed AD. However, we estimate the following costs to do any necessary repairs of the station 328 frame and the station 360 frame. We have no way of determining the number of aircraft that might need these repairs:

ON-CONDITION COSTS

Action	Labor cost	Parts cost	Cost per product
Frame 328 repair	25 work-hours × $85 per hour = $2,125	Negligible	$2,125
Frame 360 repair	5 work-hours × $85 per hour = $425	Negligible	425

Authority for This Rulemaking

Title 49 of the United States Code specifies the FAA's authority to issue rules on aviation safety. Subtitle I, section 106, describes the authority of the FAA Administrator. Subtitle VII: Aviation Programs, describes in more detail the scope of the Agency's authority.

We are issuing this rulemaking under the authority described in Subtitle VII, Part A, Subpart III, Section 44701: ''General requirements.'' Under that section, Congress charges the FAA with promoting safe flight of civil aircraft in air commerce by prescribing regulations for practices, methods, and procedures the Administrator finds necessary for safety in air commerce. This proposed regulation is within the scope of that authority because it addresses an unsafe condition that is likely to exist or develop on products identified in this rulemaking action.

Regulatory Findings

We determined that this proposed AD would not have federalism implications under Executive Order 13132. This proposed AD would not have a substantial direct effect on the States, on the relationship between the national Government and the States, or on the distribution of power and responsibilities among the various levels of government.

For the reasons discussed above, I certify this proposed regulation:

(1) Is not a ''significant regulatory action'' under Executive Order 12866,

(2) Is not a ''significant rule'' under the DOT Regulatory Policies and Procedures (44 FR 11034, February 26, 1979),

(3) Will not affect intrastate aviation in Alaska, and

(4) Will not have a significant economic impact, positive or negative, on a substantial number of small entities under the criteria of the Regulatory Flexibility Act.

List of Subjects in 14 CFR Part 39

Air transportation, Aircraft, Aviation safety, Incorporation by reference, Safety.

The Proposed Amendment

Accordingly, under the authority delegated to me by the Administrator,

the FAA proposes to amend 14 CFR part 39 as follows:

PART 39—AIRWORTHINESS DIRECTIVES

■ 1. The authority citation for part 39 continues to read as follows:

Authority: 49 U.S.C. 106(g), 40113, 44701.

§ 39.13 [Amended]

■ 2. The FAA amends § 39.13 by adding the following new airworthiness directive (AD):

The Boeing Company: Docket No. FAA–2014–0346; Directorate Identifier 2014–NM–010–AD.

(a) Comments Due Date

We must receive comments by August 14, 2014.

(b) Affected ADs

None.

(c) Applicability

This AD applies to The Boeing Company Model 737–100, –200, –200C, –300, –400, and –500 series airplanes, certificated in any category, as identified in Boeing Alert Service Bulletin 737–53A1323, dated December 6, 2013.

(d) Subject

Air Transport Association (ATA) of America Code 53, Fuselage.

(e) Unsafe Condition

This AD was prompted by reports of cracks in fuselage frames, and a report of a missing strap that was not installed on a fuselage frame during production. We are issuing this AD to detect and correct missing fuselage frame straps and frame cracking that can result in severed frames. Continued operation of the airplane with multiple adjacent severed frames, or the combination of a severed frame and fuselage skin chemical mill cracks, can result in uncontrolled decompression of the airplane.

(f) Compliance

Comply with this AD within the compliance times specified, unless already done.

(g) Group 1 Airplane Actions

For airplanes identified as Group 1 in Boeing Alert Service Bulletin 737–53A1323, dated December 6, 2013: At the applicable time specified in Table 1 of paragraph 1.E., ''Compliance,'' of Boeing Alert Service Bulletin 737–53A1323, dated December 6, 2013, except as provided by paragraph (m)(1) of this AD, do the repair using a method approved in accordance with the procedures specified in paragraph (o) of this AD.

(h) Groups 2 Through 7 Airplanes: Inspection for Strap Installation at Station 312

For airplanes identified as Groups 2 through 7 in Boeing Alert Service Bulletin 737–53A1323, dated December 6, 2013: At the applicable time specified in Tables 2 and 3 of Paragraph 1.E., ''Compliance,'' of Boeing Alert Service Bulletin 737–53A1323, dated December 6, 2013, except as provided by paragraph (m)(1) of this AD, do a general visual inspection of the frame at station 312 to determine if the strap adjacent to stringer S–22R is installed, in accordance with the Accomplishment Instructions of Boeing Alert Service Bulletin 737–53A1323, dated December 6, 2013. If the strap is not installed, before further flight, repair using a method approved in accordance with the procedures specified in paragraph (o) of this AD.

(i) Groups 2 Through 6 Airplanes With Less Than 28,300 Total Flight Cycles: Repetitive Inspections, Related Investigative Actions, and Corrective Actions at Stations 328, 344, and 360

For airplanes identified as Groups 2 through 6 in Boeing Alert Service Bulletin 737–53A1323, dated December 6, 2013, that have accumulated less than 28,300 total flight cycles as of the effective date of this AD: Do the actions required by paragraphs (i)(1) and (i)(2) of this AD.

(1) At the applicable times specified in Tables 4, 5, 7, and 8 of Paragraph 1.E., ''Compliance,'' of Boeing Alert Service Bulletin 737–53A1323, dated December 6, 2013, except as provided by paragraph (m)(1) of this AD: Do detailed and eddy current inspections of the frame at stations 328, 344, and 360 for cracking or a severed frame web; and do all applicable related investigative and corrective actions; in accordance with the Accomplishment Instructions of Boeing Alert Service Bulletin 737–53A1323, dated December 6, 2013, except as specified in paragraph (m)(2) of this AD. Do all applicable related investigative and corrective actions before further flight. Repeat the applicable inspections thereafter at the applicable time and intervals specified in Paragraph 1.E., ''Compliance,'' of Boeing Alert Service Bulletin 737–53A1323, dated December 6, 2013, until the inspection required by paragraph (i)(2) of this AD is done. Doing the preventative modification of the frame at station 360 and the repair of the frame at station 328, as applicable, in accordance with the Accomplishment Instructions of Boeing Alert Service Bulletin 737–53A1323, dated December 6, 2013, except as specified in paragraph (m)(2) of this AD, terminates the applicable repetitive inspection requirements of paragraph (i)(1) of this AD.

(2) At the applicable time specified in Tables 4, 5, 7, and 8 of paragraph 1.E., ''Compliance,'' of Boeing Alert Service Bulletin 737–53A1323, dated December 6, 2013, do the actions specified in paragraph (i)(2)(i) or (i)(2)(ii) of this AD. Accomplishing the initial inspections required by paragraph (i)(2) of this AD terminates the inspections required by paragraph (i)(1) of this AD. Doing the preventative modification of the frame at station 360 and the repair of the frame at station 328, as applicable, in accordance with the Accomplishment Instructions of Boeing Alert Service Bulletin 737–53A1323, dated December 6, 2013, except as specified in paragraph (m)(2) of this AD, terminates the applicable repetitive inspection requirements of paragraph (i)(2)(i) and (i)(2)(ii) of this AD.

(i) Do detailed and eddy current inspections of the frame at stations 328, 344, and 360 for cracking or a severed frame web; and do all applicable related investigative and corrective actions; in accordance with the Accomplishment Instructions of Boeing Alert Service Bulletin 737–53A1323, dated December 6, 2013, except as specified in paragraph (m)(2) of this AD. Do all applicable related investigative and corrective actions before further flight. Repeat the inspections specified in this paragraph thereafter at the applicable time and intervals specified in paragraph 1.E., ''Compliance,'' of Boeing Alert Service Bulletin 737–53A1323, dated December 6, 2013.

(ii) Do detailed and eddy current inspections of the frame at stations 328, 344, and 360 for cracking or a severed frame web; and external detailed and eddy current inspections of the fuselage skin for cracking; and do all applicable related investigative and corrective actions; in accordance with the Accomplishment Instructions of Boeing Alert Service Bulletin 737–53A1323, dated December 6, 2013, except as specified in paragraph (m)(2) of this AD. Do all applicable related investigative and corrective actions before further flight. Repeat the applicable inspections thereafter at the applicable time and intervals specified in Paragraph 1.E., ''Compliance,'' of Boeing Alert Service Bulletin 737–53A1323, dated December 6, 2013.

(j) Groups 2 Through 6 Airplanes With 28,300 Total Flight Cycles or More: Repetitive Inspections, Related Investigative Actions, and Corrective Actions at Stations 328, 344, and 360

For airplanes identified as Groups 2 through 6 in Boeing Alert Service Bulletin 737–53A1323, dated December 6, 2013, that have accumulated 28,300 total flight cycles or more as of the effective date of this AD: At the applicable times specified in Tables 4, 5, 7, and 8 of Paragraph 1.E., ''Compliance,'' of Boeing Alert Service Bulletin 737–53A1323, dated December 6, 2013, except as provided by paragraph (m)(1) of this AD, do the inspections specified in paragraphs (j)(1) or (j)(2) of this AD; and do all applicable related investigative and corrective actions; in accordance with the Accomplishment Instructions of Boeing Alert Service Bulletin 737–53A1323, dated December 6, 2013, except as specified in paragraph (m)(2) of this AD. Do all applicable related investigative and corrective actions before further flight. Repeat the applicable inspections specified in paragraphs (j)(1) or (j)(2) of this AD thereafter at the applicable time and intervals specified in Paragraph 1.E., ''Compliance,'' of Boeing Alert Service Bulletin 737–53A1323, dated December 6, 2013. Doing the preventative modification of the frame at station 360 and the repair of the frame at station 328, as applicable, in accordance with the Accomplishment Instructions of Boeing Alert Service Bulletin 737–53A1323, dated December 6, 2013, except as specified in paragraph (m)(2) of this AD, terminates the applicable repetitive inspection requirements of this paragraph.

(1) Do detailed and eddy current inspections of the frame at stations 328, 344, and 360 for cracking or a severed frame web.

(2) Do detailed and eddy current inspections of the frame at stations 328, 344, and 360 for cracking or a severed frame web; and external detailed and eddy current inspections of the fuselage skin for cracking.

(k) Group 7 Airplanes: Repetitive Inspections, Related Investigative Actions, and Corrective Actions at Station 328

For airplanes identified as Group 7 in Boeing Alert Service Bulletin 737–53A1323, dated December 6, 2013: At the applicable time specified in Table 6 of Paragraph 1.E., ''Compliance,'' of Boeing Alert Service Bulletin 737–53A1323, dated December 6, 2013, except as provided by paragraph (m)(1) of this AD, do a detailed inspection of the frame at station 328 for cracking or a severed frame web; and do all applicable related investigative and corrective actions; in accordance with the Accomplishment Instructions of Boeing Alert Service Bulletin 737–53A1323, dated December 6, 2013, except as specified in paragraph (m)(2) of this AD. Do all applicable related investigative and corrective actions before further flight. Repeat the inspections specified in this paragraph thereafter at the applicable time and intervals specified in paragraph 1.E., ''Compliance,'' of Boeing Alert Service Bulletin 737–53A1323, dated December 6, 2013. Doing the repair of the frame at station 328, in accordance with the Accomplishment Instructions of Boeing Alert Service Bulletin 737–53A1323, dated December 6, 2013, except as specified in paragraph (m)(2) of this AD, terminates the repetitive inspection requirements of this paragraph.

(l) Groups 2 Through 5 Airplanes: Repetitive Inspections, Related Investigative Actions, and Corrective Actions at Station 380

For airplanes identified as Groups 2 through 5 in Boeing Alert Service Bulletin 737–53A1323, dated December 6, 2013: At the applicable time specified in Tables 9 and 10 of Paragraph 1.E., ''Compliance,'' of Boeing Alert Service Bulletin 737–53A1323, dated December 6, 2013, except as provided by paragraph (m)(1) of this AD, do detailed and eddy current inspections of the frame at station 380 for cracking or a severed frame web; and do all applicable corrective actions; in accordance with the Accomplishment Instructions of Boeing Alert Service Bulletin 737–53A1323, dated December 6, 2013, except as specified in paragraph (m)(2) of this AD. Do all applicable corrective actions before further flight. Repeat the inspections specified in this paragraph thereafter at the applicable time and intervals specified in Paragraph 1.E., ''Compliance,'' of Boeing Alert Service Bulletin 737–53A1323, dated December 6, 2013.

(m) Exceptions to Service Information

(1) Where Boeing Alert Service Bulletin 737–53A1323, dated December 6, 2013, specifies a compliance time after the ''original issue date of this service bulletin,'' this AD requires compliance within the specified compliance time after the effective date of this AD.

(2) If any cracking is found during any inspection required by this AD, and Boeing Alert Service Bulletin 737–53A1323, dated December 6, 2013, specifies to contact Boeing for appropriate action: Before further flight, repair the cracking using a method approved in accordance with the procedures specified in paragraph (o) of this AD.

(n) Post-Repair Inspections and Post-Modification Inspections

The post-repair and post-modification inspections specified in Tables 13 through 15 of paragraph 1.E., ''Compliance,'' of Boeing Alert Service Bulletin 737–53A1323, dated December 6, 2013, are not required by this AD.

Note 1 to paragraph (n) of this AD: The post-repair and post-modification inspections specified in Tables 13 through 15 of paragraph 1.E., ''Compliance,'' of Boeing Alert Service Bulletin 737–53A1323, dated December 6, 2013, may be used in support of compliance with section 121.1109(c)(2) or 129.109(b)(2) of the Federal Aviation Regulations (14 CFR 121.1109(c)(2) or 14 CFR 129.109(b)(2)). The corresponding actions specified in the Accomplishment Instructions of Boeing Alert Service Bulletin 737–53A1323, dated December 6, 2013, are not required by this AD.

(o) Alternative Methods of Compliance (AMOCs)

(1) The Manager, Seattle Aircraft Certification Office (ACO), FAA, has the authority to approve AMOCs for this AD, if requested using the procedures found in 14 CFR 39.19. In accordance with 14 CFR 39.19, send your request to your principal inspector or local Flight Standards District Office, as appropriate. If sending information directly to the manager of the ACO, send it to the attention of the person identified in paragraph (p)(1) of this AD. Information may be emailed to: *9-ANM-Seattle-ACO-AMOC-Requests@faa.gov.*

(2) Before using any approved AMOC, notify your appropriate principal inspector, or lacking a principal inspector, the manager of the local flight standards district office/certificate holding district office.

(3) An AMOC that provides an acceptable level of safety may be used for any repair required by this AD if it is approved by the Boeing Commercial Airplanes Organization Designation Authorization that has been authorized by the Manager, Seattle ACO, to make those findings. For a repair method to be approved, the repair must meet the certification basis of the airplane, and the approval must specifically refer to this AD.

(p) Related Information

(1) For more information about this AD, contact Alan Pohl, Aerospace Engineer, Airframe Branch, ANM–120S, FAA, Seattle Aircraft Certification Office, 1601 Lind Avenue SW., Renton, WA 98057–3356; phone: 425–917–6450; fax: 425–917–6590; email: *alan.pohl@faa.gov.*

(2) For service information identified in this AD, contact Boeing Commercial Airplanes, Attention: Data & Services Management, P.O. Box 3707, MC 2H–65, Seattle, WA 98124–2207; telephone 206–544–5000, extension 1; fax 206–766–5680; Internet *https://www.myboeingfleet.com.* You may view this referenced service information at the FAA, Transport Airplane Directorate, 1601 Lind Avenue SW., Renton, WA. For information on the availability of this material at the FAA, call 425–227–1221.

Issued in Renton, Washington, on June 19, 2014.

Michael Kaszycki,

Acting Manager, Transport Airplane Directorate, Aircraft Certification Service.

[FR Doc. 2014–15251 Filed 6–27–14; 8:45 am]

BILLING CODE 4910–13–P

DEPARTMENT OF TRANSPORTATION

Federal Aviation Administration

14 CFR Part 39

[Docket No. FAA–2014–0345; Directorate Identifier 2013–NM–230–AD]

RIN 2120–AA64

Airworthiness Directives; Beechcraft Corporation (Type Certificate Previously Held by Hawker Beechcraft Corporation; Raytheon Aircraft Company; Beech Aircraft Corporation) Airplanes

AGENCY: Federal Aviation Administration (FAA), DOT.

ACTION: Notice of proposed rulemaking (NPRM).

SUMMARY: We propose to adopt a new airworthiness directive (AD) for certain Beechcraft Corporation (Type Certificate Previously Held by Hawker Beechcraft Corporation; Raytheon Aircraft Company; Beech Aircraft Corporation) Model 400, 400A, 400T, and MU–300 airplanes. This proposed AD was prompted by a report of a failure of the Acme nut threads in a pitch trim actuator (PTA). This proposed AD would require an inspection to determine if PTAs having a certain serial number and part number are installed, and replacement if they are installed. This proposed AD would also require repetitive replacements of PTAs with new PTAs or certain overhauled PTAs. We are proposing this AD to prevent failure of the Acme nut threads in the PTA, which could lead to loss of control of pitch trim and reduced controllability of the airplane.

DATES: We must receive comments on this proposed AD by August 29, 2014.

ADDRESSES: You may send comments, using the procedures found in 14 CFR 11.43 and 11.45, by any of the following methods:

- *Federal eRulemaking Portal:* Go to *http://www.regulations.gov.* Follow the instructions for submitting comments.
- *Fax:* 202–493–2251.
- *Mail:* U.S. Department of Transportation, Docket Operations, M–30, West Building Ground Floor, Room

W12–140, 1200 New Jersey Avenue SE., Washington, DC 20590.

• *Hand Delivery:* Deliver to Mail address above between 9 a.m. and 5 p.m., Monday through Friday, except Federal holidays.

For service information identified in this proposed AD, contact Beechcraft Corporation, TMDC, P.O. Box 85, Wichita, KS 67201–0085; telephone 316–676–8238; fax 316–671–2540; email *tmdc@beechcraft.com*; Internet *http://pubs.beechcraft.com.* You may view this referenced service information at the FAA, Transport Airplane Directorate, 1601 Lind Avenue SW., Renton, WA. For information on the availability of this material at the FAA, call 425–227–1221.

Examining the AD Docket

You may examine the AD docket on the Internet at *http://www.regulations.gov* by searching for and locating Docket No. FAA–2014–0345; or in person at the Docket Management Facility between 9 a.m. and 5 p.m., Monday through Friday, except Federal holidays. The AD docket contains this proposed AD, the regulatory evaluation, any comments received, and other information. The street address for the Docket Office (phone: 800–647–5527) is in the **ADDRESSES** section. Comments will be available in the AD docket shortly after receipt.

FOR FURTHER INFORMATION CONTACT: Ann Johnson, Aerospace Engineer, Systems and Propulsion Branch, ACE–116W, FAA, Wichita Aircraft Certification Office (ACO), 1801 Airport Road, Room 100, Mid-Continent Airport, Wichita, KS 67209; phone: (316) 946–4105; fax: (316) 946–4107; email: *Ann.Johnson@faa.gov.*

SUPPLEMENTARY INFORMATION:

Comments Invited

We invite you to send any written relevant data, views, or arguments about this proposal. Send your comments to an address listed under the **ADDRESSES** section. Include ''Docket No. FAA–2014–0345; Directorate Identifier 2013–NM–230–AD'' at the beginning of your comments. We specifically invite comments on the overall regulatory, economic, environmental, and energy aspects of this proposed AD. We will consider all comments received by the closing date and may amend this proposed AD because of those comments.

We will post all comments we receive, without change, to *http://www.regulations.gov*, including any personal information you provide. We will also post a report summarizing each substantive verbal contact we receive about this proposed AD.

Discussion

We have received a report of a failure of the Acme nut threads in a PTA, due to accelerated thread wear on the Acme nut that mates with the jackscrew. This condition, if not corrected, could result in failure of the Acme nut threads in the PTA, which could lead to loss of control of pitch trim and reduced controllability of the airplane.

Relevant Service Information

We reviewed Hawker Beechcraft Mandatory Service Bulletin 27–4100, dated March 2012. This service bulletin describes procedures for an inspection to determine if PTAs having a certain serial number and part number are installed, and replacing those PTAs having specific serial numbers listed in the service bulletin.

FAA's Determination

We are proposing this AD because we evaluated all the relevant information and determined the unsafe condition described previously is likely to exist or develop in other products of these same type designs.

Proposed AD Requirements

This proposed AD would require accomplishing the actions specified in the service information described previously, except as discussed under ''Differences Between This Proposed AD and the Service Information.''

Differences Between This Proposed AD and the Service Information

Although Hawker Beechcraft Mandatory Service Bulletin 27–4100, dated March 2012, does not require repetitive replacements, this proposed AD would require repetitive replacements of PTAs with new PTAs or with overhauled PTAs having an Acme nut and jackscrew replaced with a new Acme nut and jackscrew every 1,800 flight hours or at the next PTA overhaul, whichever occurs first.

While the effectivity of Hawker Beechcraft Mandatory Service Bulletin 27–4100, dated March 2012, does not include Model MU–300 airplanes, those airplanes are included in the applicability of this proposed AD since the affected PTAs can also be used on these airplanes.

Costs of Compliance

We estimate that this proposed AD affects 735 airplanes of U.S. registry.

We estimate the following costs to comply with this proposed AD:

ESTIMATED COSTS

Action	Labor cost	Parts cost	Cost per product	Cost on U.S. operators
Identification of serial/part numbers (735 airplanes).	1 work-hour × $85 per hour = $85.	$0	$85	$62,475.
Replacement of PTA (26 airplanes).	10 work-hours × $85 per hour = $850 per replacement.	$17,334 per replacement	$18,184 per replacement	$472,784 per replacement.
Repetitive replacement of jackscrew and Acme nut on PTAs (735 airplanes).	10 work-hours × $85 per hour = $850 per replacement.	$17,334 per replacement	$18,184 per replacement	$13,365,240 per replacement.

According to the manufacturer, the costs of this proposed AD associated with Hawker Beechcraft Mandatory Service Bulletin 27–4100, dated March 2012, may be covered under warranty, thereby reducing the cost impact on affected owners/operators. We do not control warranty coverage for affected individuals. As a result, we have included all costs in our cost estimate. The costs of the repetitive replacement are not covered under warranty. However, the PTA manufacturer states that it is already replacing the Acme nut and jackscrew at every overhaul, so the owners/operators should not see a cost increase due to this repetitive replacement requirement.

Authority for This Rulemaking

Title 49 of the United States Code specifies the FAA's authority to issue rules on aviation safety. Subtitle I, section 106, describes the authority of the FAA Administrator. Subtitle VII: Aviation Programs, describes in more detail the scope of the Agency's authority.

We are issuing this rulemaking under the authority described in Subtitle VII, Part A, Subpart III, Section 44701: ''General requirements.'' Under that section, Congress charges the FAA with promoting safe flight of civil aircraft in air commerce by prescribing regulations for practices, methods, and procedures the Administrator finds necessary for safety in air commerce. This proposed regulation is within the scope of that authority because it addresses an unsafe condition that is likely to exist or develop on products identified in this rulemaking action.

Regulatory Findings

We determined that this proposed AD would not have federalism implications under Executive Order 13132. This proposed AD would not have a substantial direct effect on the States, on the relationship between the national Government and the States, or on the distribution of power and responsibilities among the various levels of government.

For the reasons discussed above, I certify this proposed regulation:

(1) Is not a ''significant regulatory action'' under Executive Order 12866,

(2) Is not a ''significant rule'' under the DOT Regulatory Policies and Procedures (44 FR 11034, February 26, 1979),

(3) Will not affect intrastate aviation in Alaska, and

(4) Will not have a significant economic impact, positive or negative, on a substantial number of small entities under the criteria of the Regulatory Flexibility Act.

List of Subjects in 14 CFR Part 39

Air transportation, Aircraft, Aviation safety, Incorporation by reference, Safety.

The Proposed Amendment

Accordingly, under the authority delegated to me by the Administrator, the FAA proposes to amend 14 CFR part 39 as follows:

PART 39—AIRWORTHINESS DIRECTIVES

■ 1. The authority citation for part 39 continues to read as follows:

Authority: 49 U.S.C. 106(g), 40113, 44701.

§ 39.13 [Amended]

■ 2. The FAA amends § 39.13 by adding the following new airworthiness directive (AD):

Beechcraft Corporation (Type Certificate Previously Held by Hawker Beechcraft Corporation; Raytheon Aircraft Company; Beech Aircraft Corporation): Docket No. FAA–2014–0345; Directorate Identifier 2013–NM–230–AD.

(a) Comments Due Date

We must receive comments by August 29, 2014.

(b) Affected ADs

None.

(c) Applicability

This AD applies to the airplanes identified in paragraphs (c)(1) and (c)(2) of this AD, certificated in any category.

(1) Beechcraft Corporation (Type Certificate Previously Held by Hawker Beechcraft Corporation; Raytheon Aircraft Company; Beech Aircraft Corporation) airplanes identified in paragraphs (c)(1)(i), (c)(1)(ii), and (c)(1)(iii) of this AD.

(i) Model 400 Beechjet airplanes having serial numbers RJ–1 through RJ–65, inclusive.

(ii) Model 400A Beechjet airplanes having serial numbers RK–1 through RK–604, inclusive.

(iii) Model 400T Beechjet airplanes having serial numbers TT–1 through TT–180, inclusive, and TX–1 through TX–13, inclusive.

(2) Beechcraft Corporation (Type Certificate Previously Held by Hawker Beechcraft Corporation; Raytheon Aircraft Company; Mitsubishi Heavy Industries, Inc. Ltd.) Model MU–300 airplanes, having serial numbers A003SA through A093SA, inclusive.

(d) Subject

Air Transport Association (ATA) of America Code 27, Flight Controls.

(e) Unsafe Condition

This AD was prompted by a report of a failure of the Acme nut threads in a pitch trim actuator (PTA). We are issuing this AD to prevent failure of the Acme nut threads in the PTA, which could lead to loss of control of pitch trim and reduced controllability of the airplane.

(f) Compliance

Comply with this AD within the compliance times specified, unless already done.

(g) Determination of Serial Number and Part Number

Within 200 flight hours or 6 months after the effective date of this AD, whichever occurs first, inspect to determine the serial number and part number of the PTA, in accordance with the Accomplishment Instructions of Hawker Beechcraft Mandatory Service Bulletin 27–4100, dated March 2012. A review of manufacturer delivery and operator maintenance records is acceptable, in lieu of the inspection, if the serial number and part number of the PTA can be conclusively determined from that review.

(h) Replacement

If any serial number and part number found during an inspection required by paragraph (g) of this AD is one listed in Table 1 or Table 2 of Hawker Beechcraft Mandatory Service Bulletin 27–4100, dated March 2012: Within 200 flight hours or 6 months after the effective date of this AD, whichever occurs first, replace the PTA with a serviceable PTA or an overhauled PTA having an Acme nut and jackscrew replaced with a new Acme nut and jackscrew, in accordance with the Accomplishment Instructions of Hawker Beechcraft Mandatory Service Bulletin 27–4100, dated March 2012.

(i) Repetitive Replacements

Within 1,800 flight hours after the effective date of this AD, or at the next PTA overhaul, whichever occurs first, replace the PTA with a new PTA or an overhauled PTA having the Acme nut and jackscrew replaced with a new Acme nut and jackscrew, in accordance with sections 3.A.(2), (3), and (5) through (10) of Hawker Beechcraft Mandatory Service Bulletin 27–4100, dated March 2012. Repeat the replacement thereafter at intervals not to exceed 1,800 flight hours, or at every PTA overhaul, whichever occurs first.

(j) Alternative Methods of Compliance (AMOCs)

(1) The Manager, Wichita Aircraft Certification Office (ACO), FAA, has the authority to approve AMOCs for this AD, if requested using the procedures found in 14 CFR 39.19. In accordance with 14 CFR 39.19, send your request to your principal inspector or local Flight Standards District Office, as appropriate. If sending information directly to the manager of the ACO, send it to the attention of the person identified in paragraph (k)(1) of this AD.

(2) Before using any approved AMOC, notify your appropriate principal inspector, or lacking a principal inspector, the manager of the local flight standards district office/ certificate holding district office.

(k) Related Information

(1) For more information about this AD, contact Ann Johnson, Aerospace Engineer, Systems and Propulsion Branch, ACE–116W, FAA, Wichita Aircraft Certification Office (ACO), 1801 Airport Road, Room 100, Mid-Continent Airport, Wichita, KS 67209; phone: (316) 946–4105; fax: (316) 946–4107; email: *Ann.Johnson@faa.gov.*

(2) For service information identified in this AD, contact Beechcraft Corporation, TMDC, P.O. Box 85, Wichita, KS 67201–0085; telephone 316–676–8238; fax 316–671–2540; email *tmdc@beechcraft.com;* Internet *http://pubs.beechcraft.com.* You may view this referenced service information at the FAA, Transport Airplane Directorate, 1601 Lind Avenue SW., Renton, WA. For information on the availability of this material at the FAA, call 425–227–1221.

Issued in Renton, Washington, on June 10, 2014.

Jeffrey E. Duven,

Manager, Transport Airplane Directorate, Aircraft Certification Service.

[FR Doc. 2014–15246 Filed 6–27–14; 8:45 am]

BILLING CODE 4910–13–P

DEPARTMENT OF TRANSPORTATION

Federal Aviation Administration

14 CFR Part 39

[Docket No. FAA–2014–0426; Directorate Identifier 2013–NM–231–AD]

RIN 2120–AA64

Airworthiness Directives; The Boeing Company Airplanes

AGENCY: Federal Aviation Administration (FAA), DOT.

ACTION: Notice of proposed rulemaking (NPRM).

SUMMARY: We propose to adopt a new airworthiness directive (AD) for certain The Boeing Company Model 767 and 777 airplanes. This proposed AD was prompted by reports of uncommanded door closure of the large lower lobe cargo door. This proposed AD would require inspecting for part numbers and serial numbers of the rotary actuators of the large forward and aft lower lobe cargo doors, as applicable, and corrective action if necessary. We are proposing this AD to detect and correct rotary actuators made with a material having poor actuator gear wear characteristics, which could result in failure of the rotary actuators for the large forward or aft lower lobe cargo door and subsequent uncommanded door closure, which could possibly result in injury to people on the ground.

DATES: We must receive comments on this proposed AD by August 14, 2014.

ADDRESSES: You may send comments, using the procedures found in 14 CFR 11.43 and 11.45, by any of the following methods:

- Federal eRulemaking Portal: Go to *http://www.regulations.gov*. Follow the instructions for submitting comments.
- Fax: 202–493–2251.
- Mail: U.S. Department of Transportation, Docket Operations, M–30, West Building Ground Floor, Room W12–140, 1200 New Jersey Avenue SE., Washington, DC 20590.
- Hand Delivery: Deliver to Mail address above between 9 a.m. and 5 p.m., Monday through Friday, except Federal holidays.

For Boeing service information identified in this proposed AD, contact Boeing Commercial Airplanes, Attention: Data & Services Management, P.O. Box 3707, MC 2H–65, Seattle, WA 98124–2207; telephone 206–544–5000, extension 1; fax 206–766–5680; Internet *https://www.myboeingfleet.com.* For Eaton service information identified in this proposed AD, contact Eaton Corporation, Aerospace Operations, 3 Park Plaza, Suite 1200, Irvine, CA 92614; telephone 949–253–2100; fax 949–253–2111; Internet *http://www.eaton.com*. You may view this referenced service information at the FAA, Transport Airplane Directorate, 1601 Lind Avenue SW., Renton, WA. For information on the availability of this material at the FAA, call 425–227–1221.

Examining the AD Docket

You may examine the AD docket on the Internet at *http://www.regulations.gov* by searching for and locating Docket No. FAA–2014–0426; or in person at the Docket Management Facility between 9 a.m. and 5 p.m., Monday through Friday, except Federal holidays. The AD docket contains this proposed AD, the regulatory evaluation, any comments received, and other information. The street address for the Docket Office (phone: 800–647–5527) is in the **ADDRESSES** section. Comments will be available in the AD docket shortly after receipt.

FOR FURTHER INFORMATION CONTACT: Susan Monroe, Aerospace Engineer, Cabin Safety and Environmental Systems Branch, ANM–150S, FAA, Seattle Aircraft Certification Office, 1601 Lind Avenue SW., Renton, WA 98057–3356; phone: 425–917–6457; fax: 425–917–6590; email: *susan.l.monroe@faa.gov*.

SUPPLEMENTARY INFORMATION:

Comments Invited

We invite you to send any written relevant data, views, or arguments about this proposal. Send your comments to an address listed under the **ADDRESSES** section. Include ''Docket No. FAA–2014–0426; Directorate Identifier 2013–NM–231–AD'' at the beginning of your comments. We specifically invite comments on the overall regulatory, economic, environmental, and energy aspects of this proposed AD. We will consider all comments received by the closing date and may amend this proposed AD because of those comments.

We will post all comments we receive, without change, to *http://www.regulations.gov*, including any personal information you provide. We will also post a report summarizing each substantive verbal contact we receive about this proposed AD.

Discussion

We received reports of uncommanded door closure of the large lower lobe cargo door. One incident occurred while the door was being opened, a second one while the door was stationary in the open position, and the third incident occurred as the door was being closed. It was determined that all of the doors' rotary actuators had failed (two actuators per door). The three incidents occurred on Model 767 airplanes, but the same rotary actuator part numbers are also used on the large lower lobe cargo doors installed on the Model 777 airplanes. Examination of five of the failed rotary actuators found significant wear in the gear box and failure of the first stage input sun gear set. The sixth failed rotary actuator had a failed third-stage input sun gear from an overload condition. All three affected airplanes had between 12,500 and 13,500 total flight cycles. The failed actuators were manufactured with Nitralloy 135M steel between August 1994 and December 2000. Actuators manufactured before or after that timeframe were made with 9310 steel. The rotary actuators made from 9310 steel material are considered safe. This condition, if not corrected, could result in failure of the rotary actuators for the large lower lobe cargo door, and subsequent uncommanded door closures, which could possibly result in injury to people on the ground.

Relevant Service Information

We reviewed Boeing Service Bulletins 767–52A0100, Revision 2, dated September 26, 2013; and 777–52–0053, Revision 1, dated September 26, 2013. For information on the procedures and compliance times, see this service information at *http://www.regulations.gov* by searching for and locating Docket No. FAA–2014–0426.

Boeing Service Bulletins 767–52A0100, Revision 2, dated September 26, 2013; and 777–52–0053, Revision 1, dated September 26, 2013; refer to Eaton Service Bulletin 692D100–52–4, Revision 2, dated August 1, 2013, which provides serial number information and certain corrective actions (rework of certain rotary actuators or reidentification of certain other rotary actuators).

FAA's Determination

We are proposing this AD because we evaluated all the relevant information and determined the unsafe condition described previously is likely to exist or

develop in other products of these same type designs.

Proposed AD Requirements

This proposed AD would require inspecting for part numbers and serial numbers of the rotary actuators of the large forward and aft lower lobe cargo doors, as applicable, and corrective actions if necessary, as specified in the service information described previously.

The phrase ''corrective actions'' is used in this proposed AD. ''Corrective actions'' are actions that correct or address any condition found. Corrective actions in an AD could include, for example, repairs.

Costs of Compliance

We estimate that this proposed AD affects 510 airplanes of U.S. registry.

We estimate the following costs to comply with this proposed AD:

ESTIMATED COSTS

Action	Labor cost	Parts cost	Cost per product	Cost on U.S. operators
Inspection for part number and serial number ...	1 work-hour × $85 per hour = $85	None	$85	$43,350.

We estimate the following costs to do any necessary re-identification or replacements that would be required based on the results of the proposed inspection. We have no way of determining the number of aircraft that might need these re-identifications or replacements:

ON-CONDITION COSTS

Action	Labor cost	Parts cost	Cost per product
Re-identification	Up to 1 work-hour × $85 per hour = $85	$1	Up to $86.
Replacement	Up to 9 work-hours × $85 per hour = $765	19,700	Up to $20,465.

Authority for This Rulemaking

Title 49 of the United States Code specifies the FAA's authority to issue rules on aviation safety. Subtitle I, section 106, describes the authority of the FAA Administrator. Subtitle VII: Aviation Programs, describes in more detail the scope of the Agency's authority.

We are issuing this rulemaking under the authority described in Subtitle VII, Part A, Subpart III, Section 44701: ''General requirements.'' Under that section, Congress charges the FAA with promoting safe flight of civil aircraft in air commerce by prescribing regulations for practices, methods, and procedures the Administrator finds necessary for safety in air commerce. This proposed regulation is within the scope of that authority because it addresses an unsafe condition that is likely to exist or develop on products identified in this rulemaking action.

Regulatory Findings

We determined that this proposed AD would not have federalism implications under Executive Order 13132. This proposed AD would not have a substantial direct effect on the States, on the relationship between the national Government and the States, or on the distribution of power and responsibilities among the various levels of government.

For the reasons discussed above, I certify this proposed regulation:

(1) Is not a ''significant regulatory action'' under Executive Order 12866,

(2) Is not a ''significant rule'' under the DOT Regulatory Policies and Procedures (44 FR 11034, February 26, 1979),

(3) Will not affect intrastate aviation in Alaska, and

(4) Will not have a significant economic impact, positive or negative, on a substantial number of small entities under the criteria of the Regulatory Flexibility Act.

List of Subjects in 14 CFR Part 39

Air transportation, Aircraft, Aviation safety, Incorporation by reference, Safety.

The Proposed Amendment

Accordingly, under the authority delegated to me by the Administrator, the FAA proposes to amend 14 CFR part 39 as follows:

PART 39—AIRWORTHINESS DIRECTIVES

■ 1. The authority citation for part 39 continues to read as follows:

Authority: 49 U.S.C. 106(g), 40113, 44701.

§ 39.13 [Amended]

■ 2. The FAA amends § 39.13 by adding the following new airworthiness directive (AD):

The Boeing Company: Docket No. FAA–2014–0426; Directorate Identifier 2013–NM–231–AD.

(a) Comments Due Date

We must receive comments by August 14, 2014.

(b) Affected ADs

None.

(c) Applicability

This AD applies to The Boeing Company airplanes identified in paragraphs (c)(1) and (c)(2) of this AD, certificated in any category.

(1) Model 767–200, –300, –300F, and –400ER series airplanes, as identified in Boeing Service Bulletin 767–52A0100, Revision 2, dated September 26, 2013.

(2) Model 777–200, –200LR, –300, –300ER, and 777F series airplanes, as identified in Boeing Service Bulletin 777–52–0053, Revision 1, dated September 26, 2013.

(d) Subject

Air Transport Association (ATA) of America Code 52, Doors.

(e) Unsafe Condition

This AD was prompted by reports of uncommanded door closure of the large lower lobe cargo door. We are issuing this AD to detect and correct rotary actuators made with a material having poor wear characteristics, which could result in failure of the rotary actuators for the large forward or aft lower lobe cargo door and subsequent uncommanded door closure, which could possibly result in injury to people on the ground.

(f) Compliance

Comply with this AD within the compliance times specified, unless already done.

(g) Inspection for Part Numbers, and Re-Identification or Replacement, for Model 767 Airplanes

For Model 767–200, –300, –300F, and –400ER series airplanes: Within 30 months after the effective date of this AD, inspect each rotary actuator installed in the forward

and aft large lower lobe cargo doors, as applicable, to determine the part number and serial number, and do all applicable corrective actions, in accordance with the Accomplishment Instructions of Boeing Service Bulletin 767–52A0100, Revision 2, dated September 26, 2013; and Eaton Service Bulletin 692D100–52–4, Revision 2, dated August 1, 2013. Do the applicable corrective actions at the applicable time specified in paragraph 1.E., ''Compliance,'' of Boeing Service Bulletin 767–52A0100, Revision 2, dated September 26, 2013, except as required by paragraph (i) of this AD. A review of maintenance records for the part number and serial number is acceptable in lieu of the inspection if the part and serial numbers of the rotary actuator can be conclusively determined from that review.

(h) Inspection for Part Numbers, and Re-Identification or Replacement, for Model 777 Airplanes

For Model 777–200, –200LR, –300, –300ER, and 777F series airplanes: Within 72 months after the effective date of this AD, inspect each rotary actuator installed in the forward and aft large lower lobe cargo doors, as applicable, to determine the part number and serial number, and do all applicable corrective actions, in accordance with the Accomplishment Instructions of Boeing Service Bulletin 777–52–0053, Revision 1, dated September 26, 2013; and Eaton Service Bulletin 692D100–52–4, Revision 2, dated August 1, 2013. Do the applicable corrective actions at the applicable time specified in paragraph 1.E., ''Compliance,'' of Boeing Service Bulletin 777–52–0053, Revision 1, dated September 26, 2013, except as required by paragraph (i) of this AD. A review of maintenance records for the part number and serial number is acceptable in lieu of the inspection if the part and serial numbers of the rotary actuator can be conclusively determined from that review.

(i) Exception to the Service Information

Where Boeing Service Bulletin 767–52A0100, Revision 2, dated September 26, 2013; and Boeing Service Bulletin 777–52–0053, Revision 1, dated September 26, 2013, specify a compliance time after the issue date ''of this service bulletin,'' this AD requires compliance within the specified compliance time after the effective date of this AD.

(j) Parts Installation Prohibition

As of the effective date of this AD, no rotary actuator having Boeing part number S135W132–3 (supplier part number 692D100–13) may be installed on any airplane.

(k) Alternative Methods of Compliance (AMOCs)

(1) The Manager, Seattle Aircraft Certification Office (ACO), FAA, has the authority to approve AMOCs for this AD, if requested using the procedures found in 14 CFR 39.19. In accordance with 14 CFR 39.19, send your request to your principal inspector or local Flight Standards District Office, as appropriate. If sending information directly to the manager of the ACO, send it to the attention of the person identified in paragraph (l)(1) of this AD. Information may be emailed to: *9-ANM-Seattle-ACO-AMOC-Requests@faa.gov*.

(2) Before using any approved AMOC, notify your appropriate principal inspector, or lacking a principal inspector, the manager of the local flight standards district office/certificate holding district office.

(3) An AMOC that provides an acceptable level of safety may be used for any repair required by this AD if it is approved by the Boeing Commercial Airplanes Organization Designation Authorization (ODA) that has been authorized by the Manager, Seattle ACO, to make those findings. For a repair method to be approved, the repair must meet the certification basis of the airplane, and the approval must specifically refer to this AD.

(l) Related Information

(1) For more information about this AD, contact Susan Monroe, Aerospace Engineer, Cabin Safety and Environmental Systems Branch, ANM–150S, FAA, Seattle Aircraft Certification Office, 1601 Lind Avenue SW., Renton, WA 98057–3356; phone: 425–917–6457; fax: 425–917–6590; email: *susan.l.monroe@faa.gov*.

(2) For Boeing service information identified in this AD, contact Boeing Commercial Airplanes, Attention: Data & Services Management, P.O. Box 3707, MC 2H–65, Seattle, WA 98124–2207; telephone 206–544–5000, extension 1; fax 206–766–5680; Internet *https://www.myboeingfleet.com*. For Eaton service information identified in this AD, contact Eaton Corporation, Aerospace Operations, 3 Park Plaza, Suite 1200, Irvine, CA 92614; telephone 949–253–2100; fax 949–253–2111; Internet *http://www.eaton.com*. You may view this referenced service information at the FAA, Transport Airplane Directorate, 1601 Lind Avenue SW., Renton, Washington. For information on the availability of this material at the FAA, call 425–227–1221.

Issued in Renton, Washington, on June 19, 2014.

Michael Kaszycki,

Acting Manager, Transport Airplane Directorate, Aircraft Certification Service.

[FR Doc. 2014–15250 Filed 6–27–14; 8:45 am]

BILLING CODE 4910–13–P

DEPARTMENT OF TRANSPORTATION

Federal Aviation Administration

14 CFR Part 39

[Docket No. FAA–2014–0347; Directorate Identifier 2013–NM–173–AD]

RIN 2120–AA64

Airworthiness Directives; the Boeing Company Airplanes

AGENCY: Federal Aviation Administration (FAA), DOT.

ACTION: Notice of proposed rulemaking (NPRM).

SUMMARY: We propose to adopt a new airworthiness directive (AD) for certain The Boeing Company Model 767–200 and –300 series airplane equipped with Pratt & Whitney Model JT9D or PW4000 engines. This proposed AD was prompted by a report of several cases of low hydraulic pressure or loss of electrical power to the alternating current motor pump (ACMP) on the left engine. This proposed AD would require inspecting for damage of the wiring bundles in the left engine's strut and corrective actions if necessary, and installing new wire support brackets and bundle clamp. We are proposing this AD to detect and correct chafed wire bundles due to rubbing against structure or a hydraulic piping elbow, which could result in electrical arcing in a flammable fluid leakage zone, and would provide a possible ignition source for fuel vapors and hydraulic fluids. Ignited fuel vapors or hydraulic fluid in an area without a fire detection or suppression system could result in an uncontained engine strut fire and structural damage to the engine strut.

DATES: We must receive comments on this proposed AD by August 14, 2014.

ADDRESSES: You may send comments, using the procedures found in 14 CFR 11.43 and 11.45, by any of the following methods:

- *Federal eRulemaking Portal:* Go to *http://www.regulations.gov*. Follow the instructions for submitting comments.
- *Fax:* 202–493–2251.
- *Mail:* U.S. Department of Transportation, Docket Operations, M–30, West Building Ground Floor, Room W12–140, 1200 New Jersey Avenue SE., Washington, DC 20590.
- *Hand Delivery:* Deliver to Mail address above between 9 a.m. and 5 p.m., Monday through Friday, except Federal holidays.

For service information identified in this proposed AD, contact Boeing Commercial Airplanes, Attention: Data & Services Management, P.O. Box 3707, MC 2H–65, Seattle, WA 98124–2207; telephone 206–544–5000, extension 1; fax 206–766–5680; Internet *https://www.myboeingfleet.com*. You may view this referenced service information at the FAA, Transport Airplane Directorate, 1601 Lind Avenue SW., Renton, WA. For information on the availability of this material at the FAA, call 425–227–1221.

Examining the AD Docket

You may examine the AD docket on the Internet at *http://www.regulations.gov* by searching for and locating Docket No. FAA–2014–0347; or in person at the Docket Management Facility between 9 a.m. and 5 p.m., Monday through Friday,

except Federal holidays. The AD docket contains this proposed AD, the regulatory evaluation, any comments received, and other information. The street address for the Docket Office (phone: 800–647–5527) is in the **ADDRESSES** section. Comments will be available in the AD docket shortly after receipt.

FOR FURTHER INFORMATION CONTACT:

Georgios Roussos, Aerospace Engineer, Systems and Equipment Branch, ANM–130S, FAA, Seattle Aircraft Certification Office, 1601 Lind Avenue SW., Renton, WA 98057–3356; phone: 425–917–6482; fax: 425–917–6590; email: *georgios.roussos@faa.gov.*

SUPPLEMENTARY INFORMATION:

Comments Invited

We invite you to send any written relevant data, views, or arguments about this proposal. Send your comments to an address listed under the **ADDRESSES** section. Include ''Docket No. FAA–2014–0347; Directorate Identifier 2013–NM–173–AD'' at the beginning of your comments. We specifically invite comments on the overall regulatory, economic, environmental, and energy aspects of this proposed AD. We will consider all comments received by the closing date and may amend this proposed AD because of those comments.

We will post all comments we receive, without change, to *http://www.regulations.gov,* including any personal information you provide. We will also post a report summarizing each substantive verbal contact we receive about this proposed AD.

Discussion

We have received a report of several cases of low hydraulic pressure or loss of electrical power to the ACMP on the left engine. These cases were found to be caused by a damaged power feeder wire bundle in the outboard aft fairing area of the left engine strut. In most of the cases, the wire bundle had chafed against the fuse pin washer at the midspar fitting and signs of arcing were found. In one case, the wire bundle was found to have chafed against a hydraulic piping elbow near the fuse pin washer, which resulted in a severed wire bundle and a hole in the hydraulic piping elbow. That hole in the hydraulic piping elbow, if not found, could result in a hydraulic fluid leak. Wire bundles that are chafed due to rubbing against structure or the hydraulic piping elbow, if not detected and corrected, could result in electrical arcing in a flammable fluid leakage zone, and would provide a possible ignition source for fuel vapors and hydraulic fluids. Ignited fuel vapors or hydraulic fluid in an area without a fire detection or suppression system could result in an uncontained engine strut fire and structural damage to the engine strut.

Related Rulemaking

AD 2004–16–12, Amendment 39–13768 (69 FR 51002, August 17, 2004), also applies to certain Model 767 airplanes that are powered by Pratt & Whitney engines. AD 2004–16–12 required actions to prevent fatigue cracking in primary strut structure, which could result in separation of the strut and engine from the airplane. One of those actions is the prior or concurrent accomplishment of Boeing Service Bulletin 767–29–0057, dated December 16, 1993; or Revision 1, dated August 14, 2003.

Relevant Service Information

We reviewed Boeing Alert Service Bulletin 767–29A0115, dated May 22, 2013. For information on the procedures and compliance times, see this service information at *http://www.regulations.gov* by searching for Docket No. FAA–2014–0347.

Boeing Alert Service Bulletin 767–29A0115, dated May 22, 2013, specifies concurrent or prior accomplishment of Boeing Service Bulletin 767–29–0057, Revision 3, dated June 9, 2011, for modification of certain wire bundles.

FAA's Determination

We are proposing this AD because we evaluated all the relevant information and determined the unsafe condition described previously is likely to exist or develop in other products of the same type design.

Proposed AD Requirements

This proposed AD would require inspecting for damage of the wiring bundles in the left engine's strut, and corrective actions if necessary; and installing new wiring support brackets and bundle clamp.

The phrase ''corrective actions'' is used in this proposed AD. ''Corrective actions'' are actions that correct or address any condition found. Corrective actions in an AD could include, for example, repairs.

The FAA worked in conjunction with industry, under the Airworthiness Directives Implementation Aviation Rulemaking Committee, to enhance the AD system. One enhancement was a new process for annotating which steps in the service information are required for compliance with an AD. Differentiating these steps from other tasks in the service information is expected to improve an owner's/operator's understanding of crucial AD requirements and help provide consistent judgment in AD compliance. The actions specified in Boeing Alert Service Bulletin 767–29A0115, dated May 22, 2013, described previously include steps that are labeled as RC (required for compliance) because these steps have a direct effect on detecting, preventing, resolving, or eliminating an identified unsafe condition.

As noted in Boeing Alert Service Bulletin 767–29A0115, dated May 22, 2013, steps labeled as RC must be done to comply with the proposed AD. However, steps that are not labeled as RC are recommended. Those steps that are not labeled as RC may be deviated from, done as part of other actions, or done using accepted methods different from those identified in Boeing Alert Service Bulletin 767–29A0115, dated May 22, 2013, without obtaining approval of an alternative method of compliance (AMOC), provided the steps labeled as RC can be done and the airplane can be put back in a serviceable condition. Any substitutions or changes to steps labeled as RC will require approval of an AMOC.

Costs of Compliance

We estimate that this proposed AD affects 126 airplanes of U.S. registry.

We estimate the following costs to comply with this proposed AD:

ESTIMATED COSTS

Action	Labor cost	Parts cost	Cost per product	Cost on U.S. operators
Inspection and installation	13 work-hours × $85 per hour = $1,105	$349	$1,454	$183,204

We have received no definitive data that would enable us to provide cost estimates for the on-condition actions specified in this proposed AD.

Authority for This Rulemaking

Title 49 of the United States Code specifies the FAA's authority to issue rules on aviation safety. Subtitle I, section 106, describes the authority of the FAA Administrator. Subtitle VII: Aviation Programs, describes in more detail the scope of the Agency's authority.

We are issuing this rulemaking under the authority described in Subtitle VII, Part A, Subpart III, Section 44701: ''General requirements.'' Under that section, Congress charges the FAA with promoting safe flight of civil aircraft in air commerce by prescribing regulations for practices, methods, and procedures the Administrator finds necessary for safety in air commerce. This proposed regulation is within the scope of that authority because it addresses an unsafe condition that is likely to exist or develop on products identified in this rulemaking action.

Regulatory Findings

We determined that this proposed AD would not have federalism implications under Executive Order 13132. This proposed AD would not have a substantial direct effect on the States, on the relationship between the national Government and the States, or on the distribution of power and responsibilities among the various levels of government.

For the reasons discussed above, I certify this proposed regulation:

(1) Is not a ''significant regulatory action'' under Executive Order 12866,

(2) Is not a ''significant rule'' under the DOT Regulatory Policies and Procedures (44 FR 11034, February 26, 1979),

(3) Will not affect intrastate aviation in Alaska, and

(4) Will not have a significant economic impact, positive or negative, on a substantial number of small entities under the criteria of the Regulatory Flexibility Act.

List of Subjects in 14 CFR Part 39

Air transportation, Aircraft, Aviation safety, Incorporation by reference, Safety.

The Proposed Amendment

Accordingly, under the authority delegated to me by the Administrator, the FAA proposes to amend 14 CFR part 39 as follows:

PART 39—AIRWORTHINESS DIRECTIVES

■ 1. The authority citation for part 39 continues to read as follows:

Authority: 49 U.S.C. 106(g), 40113, 44701.

§ 39.13 [Amended]

■ 2. The FAA amends § 39.13 by adding the following new airworthiness directive (AD):

The Boeing Company: Docket No. FAA–2014–0347; Directorate Identifier 2013–NM–173–AD.

(a) Comments Due Date

We must receive comments by August 14, 2014.

(b) Affected ADs

None.

(c) Applicability

This AD applies to the Boeing Company Model 767–200 and –300 series airplanes, certificated in any category, equipped with Pratt & Whitney Model JT9D or PW4000 engines, as identified in Boeing Alert Service Bulletin 767–29A0115, dated May 22, 2013.

(d) Subject

Air Transport Association (ATA) of America Code 29, Hydraulic Power.

(e) Unsafe Condition

This AD was prompted by a report of several cases of low hydraulic pressure or loss of electrical power to the alternating current motor pump (ACMP) on the left engine. We are issuing this AD to detect and correct chafed wire bundles due to rubbing against structure or a hydraulic piping elbow, which could result in electrical arcing in a flammable fluid leakage zone, and would provide a possible ignition source for fuel vapors and hydraulic fluids. Ignited fuel vapors or hydraulic fluid in an area without a fire detection or suppression system could result in an uncontained engine strut fire and structural damage to the engine strut.

(f) Compliance

Comply with this AD within the compliance times specified, unless already done.

(g) Inspection and Corrective Actions

Within 48 months after the effective date of this AD, do a detailed inspection for damage of the wiring bundles in the left engine's strut, and all applicable corrective actions; and install new wire support brackets and bundle clamps; in accordance with the Accomplishment Instructions of Boeing Alert Service Bulletin 767–29A0115, dated May 22, 2013. Do all applicable corrective actions before further flight.

(h) Prior or Concurrent Action

For airplanes identified as Group 1 airplanes in Boeing Alert Service Bulletin 767–29A0115, dated May 22, 2013: Prior to or concurrently with doing the actions required by paragraph (g) of this AD, do a modification of the wire bundles, in accordance with the Accomplishment Instructions of Boeing Service Bulletin 767–29–0057, Revision 3, dated June 9, 2011.

Note 1 to paragraph (h) of this AD: For certain airplanes, paragraph (b) of AD 2004–16–12, Amendment 39–13768 (69 FR 51002, August 17, 2004), references Boeing Service Bulletin 767–29–0057, dated December 16, 2003; and Boeing Service Bulletin 767–29–0057, Revision 1, dated August 14, 2003; as concurrent requirements.

(i) Credit for Previous Actions

This paragraph provides credit for the actions specified in paragraph (h) of this AD, if those actions were performed before the effective date of this AD using any of the service information identified in paragraphs (i)(1), (i)(2), and (i)(3) of this AD, which are not incorporated by reference in this AD.

(1) Boeing Service Bulletin 767–29–0057, dated December 16, 1993.

(2) Boeing Service Bulletin 767–29–0057, Revision 1, dated August 14, 2003.

(3) Boeing Service Bulletin 767–29–0057, Revision 2, dated September 24, 2009.

(j) Alternative Methods of Compliance (AMOCs)

(1) The Manager, Seattle Aircraft Certification Office (ACO), FAA, has the authority to approve AMOCs for this AD, if requested using the procedures found in 14 CFR 39.19. In accordance with 14 CFR 39.19, send your request to your principal inspector or local Flight Standards District Office, as appropriate. If sending information directly to the manager of the ACO, send it to the attention of the person identified in paragraph (k) of this AD. Information may be emailed to: *9-ANM-Seattle-ACO-AMOC-Requests@faa.gov.*

(2) Before using any approved AMOC, notify your appropriate principal inspector, or lacking a principal inspector, the manager of the local flight standards district office/certificate holding district office.

(3) An AMOC that provides an acceptable level of safety may be used for any repair required by this AD if it is approved by the Boeing Commercial Airplanes Organization Designation Authorization (ODA) that has been authorized by the Manager, Seattle ACO, to make those findings. For a repair method to be approved, the repair must meet the certification basis of the airplane, and the approval must specifically refer to this AD.

(4) If the service information contains steps that are labeled as RC (Required for Compliance), those steps must be done to comply with this AD; any steps that are not labeled as RC are recommended. Those steps that are not labeled as RC may be deviated from, done as part of other actions, or done using accepted methods different from those identified in the specified service information without obtaining approval of an AMOC, provided the steps labeled as RC can be done and the airplane can be put back in a serviceable condition. Any substitutions or changes to steps labeled as RC require approval of an AMOC.

(k) Related Information

(1) For more information about this AD, contact Georgios Roussos, Aerospace

Engineer, Systems and Equipment Branch, ANM–130S, FAA, Seattle Aircraft Certification Office, 1601 Lind Avenue SW., Renton, WA 98057–3356; phone: (425) 917–6482; fax: (425) 917–6590; email: *georgios.roussos@faa.gov.*

(2) For service information identified in this AD, contact Boeing Commercial Airplanes, Attention: Data & Services Management, P.O. Box 3707, MC 2H–65, Seattle, WA 98124–2207; telephone 206–544–5000, extension 1; fax 206–766–5680; Internet *https://www.myboeingfleet.com.* You may view this referenced service information at the FAA, Transport Airplane Directorate, 1601 Lind Avenue SW., Renton, WA. For information on the availability of this material at the FAA, call 425–227–1221.

Issued in Renton, Washington, on June 19, 2014.

Michael Kaszycki,

Acting Manager, Transport Airplane Directorate, Aircraft Certification Service.

[FR Doc. 2014–15247 Filed 6–27–14; 8:45 am]

BILLING CODE 4910–13–P

DEPARTMENT OF THE TREASURY

Alcohol and Tobacco Tax and Trade Bureau

27 CFR Part 9

[Docket No. TTB–2014–0006; Notice No. 144]

RIN 1513–AC09

Proposed Establishment of the Fountaingrove District Viticultural Area

AGENCY: Alcohol and Tobacco Tax and Trade Bureau, Treasury.

ACTION: Notice of proposed rulemaking.

SUMMARY: The Alcohol and Tobacco Tax and Trade Bureau (TTB) proposes to establish the approximately 38,000-acre ''Fountaingrove District'' viticultural area in Sonoma County, California. The proposed viticultural area lies entirely within the larger, multicounty North Coast viticultural area. TTB designates viticultural areas to allow vintners to better describe the origin of their wines and to allow consumers to better identify wines they may purchase. TTB invites comments on this proposed addition to its regulations.

DATES: Comments must be received by August 29, 2014.

ADDRESSES: Please send your comments on this notice to one of the following addresses (please note that TTB has a new address for comments submitted by U.S. mail):

- *Internet: http://www.regulations.gov* (via the online comment form for this notice as posted within Docket No. TTB–2014–0006 at ''Regulations.gov,'' the Federal e-rulemaking portal);
- *U.S. Mail:* Director, Regulations and Rulings Division, Alcohol and Tobacco Tax and Trade Bureau, 1310 G Street NW., Box 12, Washington, DC 20005; or
- *Hand delivery/courier in lieu of mail:* Alcohol and Tobacco Tax and Trade Bureau, 1310 G Street NW., Suite 200–E, Washington, DC 20005.

See the Public Participation section of this notice for specific instructions and requirements for submitting comments, and for information on how to request a public hearing or obtain or review copies of the petition and supporting materials.

FOR FURTHER INFORMATION CONTACT: Karen A. Thornton, Regulations and Rulings Division, Alcohol and Tobacco Tax and Trade Bureau, 1310 G Street NW., Box 12, Washington, DC 20005; phone 202–453–1039, ext. 175.

SUPPLEMENTARY INFORMATION:

Background on Viticultural Areas

TTB Authority

Section 105(e) of the Federal Alcohol Administration Act (FAA Act), 27 U.S.C. 205(e), authorizes the Secretary of the Treasury to prescribe regulations for the labeling of wine, distilled spirits, and malt beverages. The FAA Act provides that these regulations should, among other things, prohibit consumer deception and the use of misleading statements on labels and ensure that labels provide the consumer with adequate information as to the identity and quality of the product. The Alcohol and Tobacco Tax and Trade Bureau (TTB) administers the FAA Act pursuant to section 1111(d) of the Homeland Security Act of 2002, codified at 6 U.S.C. 531(d). The Secretary has delegated various authorities through Treasury Department Order 120–01 (Revised), dated December 10, 2013, to the TTB Administrator to perform the functions and duties in the administration and enforcement of this law.

Part 4 of the TTB regulations (27 CFR part 4) authorizes the establishment of definitive viticultural areas and the use of their names as appellations of origin on wine labels and in wine advertisements. Part 9 of the TTB regulations (27 CFR part 9) sets forth standards for the preparation and submission to TTB of petitions for the establishment or modification of American viticultural areas (AVAs) and lists the approved AVAs.

Definition

Section 4.25(e)(1)(i) of the TTB regulations (27 CFR 4.25(e)(1)(i)) defines a viticultural area for American wine as a delimited grape-growing region having distinguishing features as described in part 9 of the regulations and a name and a delineated boundary as established in part 9 of the regulations. These designations allow vintners and consumers to attribute a given quality, reputation, or other characteristic of a wine made from grapes grown in an area to the wine's geographic origin. The establishment of AVAs allows vintners to describe more accurately the origin of their wines to consumers and helps consumers to identify wines they may purchase. Establishment of an AVA is neither an approval nor an endorsement by TTB of the wine produced in that area.

Requirements

Section 4.25(e)(2) of the TTB regulations outlines the procedure for proposing the establishment of an AVA and provides that any interested party may petition TTB to establish a grape-growing region as an AVA. Section 9.12 of the TTB regulations (27 CFR 9.12) prescribes the standards for petitions requesting the establishment or modification of AVAs. Petitions to establish an AVA must include the following:

- Evidence that the region within the proposed AVA boundary is nationally or locally known by the AVA name specified in the petition;
- An explanation of the basis for defining the boundary of the proposed AVA;
- A narrative description of the features of the proposed AVA that affect viticulture, such as climate, geology, soils, physical features, and elevation, that make the proposed AVA distinctive and distinguish it from adjacent areas outside the proposed AVA;
- The appropriate United States Geological Survey (USGS) map(s) showing the location of the proposed AVA, with the boundary of the proposed AVA clearly drawn thereon; and
- A detailed narrative description of the proposed AVA boundary based on USGS map markings.

Fountaingrove District Petition

TTB received a petition from Douglas Grigg of Walnut Hill Vineyards, LLC, on behalf of the Fountaingrove Appellation Committee, proposing the establishment of the ''Fountaingrove District'' AVA in Sonoma County, California. The committee originally proposed the name ''Fountaingrove'' but later requested to change the name to ''Fountaingrove District'' in order to avoid affecting current use of the word ''Fountaingrove,'' standing alone, in brand names on wine labels. The

proposed AVA contains approximately 38,000 acres and has approximately 35 commercially-producing vineyards covering a total of 500 acres. Cabernet sauvignon, chardonnay, sauvignon blanc, merlot, cabernet franc, zinfandel, syrah, and viognier are the primary grape varieties grown within the proposed AVA. According to the petition, the distinguishing features of the proposed Fountaingrove District AVA include temperature, soils, and topography. Unless otherwise noted, all information and data pertaining to the proposed AVA contained in this document are from the petition for the proposed Fountaingrove District AVA and its supporting exhibits.

The proposed Fountaingrove District AVA is located in Sonoma County, California, northeast of the city of Santa Rosa. The proposed AVA lies within the larger, multicounty North Coast AVA (27 CFR 9.30). The proposed Fountaingrove District AVA shares its boundaries with the established Russian River Valley (27 CFR 9.66), Chalk Hill (27 CFR 9.52), Knights Valley (27 CFR 9.76), Calistoga (27 CFR 9.209), Diamond Mountain District (27 CFR 9.166), Spring Mountain District (27 CFR 9.143), and Sonoma Valley (27 CFR 9.29) AVAs, but does not overlap any of these AVAs. As it was originally submitted, the petition first proposed a western boundary that slightly overlapped the established Russian River Valley AVA, but after discussions with TTB, the petitioner adjusted the proposed boundary to follow the established Russian River Valley AVA boundary because the original proposed boundary would have resulted in dividing at least one existing vineyard between Russian River Valley AVA and the proposed Fountaingrove District AVA.

Name Evidence

The proposed Fountaingrove District AVA derives its name from the historic community of Fountain Grove, a utopian colony founded northeast of the city of Santa Rosa in 1875 by Thomas Lake Harris. The community included 400 acres of vineyards and a winery. By 1882, the winery was producing 70,000 gallons of wine per year, making it one of the 10 largest wineries in California at that time.

In 1880, Harris appointed his California lieutenant, Kanaye Nagasawa, to take charge of the vineyard and winery operations and act as developer and manager of the community's 2,000 acres of vineyards. In 1900, Harris sold his interest in the vineyards and winery to Nagasawa and five other members of the commune, and by 1908, Nagasawa was the sole surviving owner of the Fountain Grove vineyards and winery. During Prohibition, he kept the vineyards and winery facilities productive by producing grape juice and cooking sherry. After Prohibition was repealed in 1933, Nagasawa changed the name of the winery and the community to ''Fountaingrove.'' Nagasawa died in 1934, and the property was eventually sold and turned into a cattle ranch.

Although the original community no longer exists and the original Fountaingrove Winery remains only as a few abandoned buildings, the name ''Fountaingrove'' is still associated with the region of the proposed Fountaingrove District AVA. The petition notes that several modern subdivisions within the proposed AVA bear the ''Fountaingrove'' name, including Fountaingrove Ranch, Fountaingrove Village, Fountaingrove II, and the Meadows at Fountaingrove, which are all built on portions of the original Fountaingrove community and vineyards. Fountaingrove Parkway is a road that runs through the southwestern portion of the proposed AVA. Fountaingrove Lake is a large reservoir within the proposed AVA. Finally, the petition listed several businesses within the proposed AVA that use the name ''Fountaingrove,'' including Fountaingrove Inn Hotel and Conference Center, Fountaingrove Lodge Retirement Community, Fountaingrove Golf and Athletic Club, Fountaingrove Realty, Fountaingrove MedSpa, Fountaingrove Dentistry, Fountaingrove Deli, and Fountaingrove Cleaners.

Boundary Evidence

The proposed AVA is a region of rolling hills and steeper mountains with elevations that range from approximately 400 feet near the city of Santa Rosa, at the southwestern boundary of the proposed AVA, to approximately 2,200 feet in the eastern portion of the proposed AVA, near the Sonoma-Napa County line.

The proposed boundary follows a series of elevation contours, roads, county lines, USGS map section lines, and straight lines between points marked on the relevant USGS maps. The northern portion of the proposed boundary is shared with the southern boundaries of the established Knights Valley and Chalk Hill AVAs. The eastern portion of the proposed boundary is formed by a ridgeline in the Mayacmas Mountains that forms the Sonoma-Napa County line. This portion of the proposed boundary is shared with the established Calistoga, Diamond Mountain District, and Spring Mountain District AVAs. Part of the southern portion of the proposed boundary is shared with the established Sonoma Valley AVA. The remainder of the proposed southern boundary separates the hills and mountains of the proposed AVA from the flat, urbanized terrain of the city of Santa Rosa. The western portion of the proposed boundary is shared with the established Russian River Valley AVA. The differences between the proposed Fountaingrove District AVA and the adjacent established AVAs are discussed below.

Distinguishing Features

The distinguishing features of the proposed Fountaingrove District AVA include its temperature, soils, and topography, and these are discussed in detail below.

Temperature

The temperature of the proposed Fountaingrove District AVA is moderated by cool breezes from the Pacific Ocean. The breezes enter the region through a gap in the Sonoma Mountains between Taylor Mountain (located south of the city of Santa Rosa) and Redwood Hill (located north of the city). Because of the marine influence, the median growing season temperature within the proposed AVA is 63.9 degrees Fahrenheit. The petition provided the growing degree day units (GDD units),[1] calculated in degrees Celsius (C), for 16 vineyards distributed throughout the proposed AVA, and the petitioner determined the median number of GDD units for the entire proposed AVA was 1,663.[2] According to the Winkler scale, this figure places the proposed AVA in the Warm Region II category.

The following table was included in the petition and compares the median

[1] In the Winkler climate classification system, annual heat accumulation during the growing season, measured in annual GDD, defines climatic regions. One GDD accumulates for each degree Fahrenheit that a day's mean temperature is above 50 degrees Fahrenheit (10 degrees Celsius), the minimum temperature required for grapevine growth. For temperatures measured in degrees Celsius, the GDD ranges are defined as Region I, for fewer than 1,388 GDD units, Region II from 1,388–1,667 GDD units, Region III for 1,667–1,944 GDD units, Region IV for 1,944–2,222 GDD units, and Region V for more than 2,222 GDD units (See Albert J. Winkler, *General Viticulture* (Berkley: University of California Press, 1974), 61–64).

[2] The GDD data was derived from 1971–2000 climate normals using the data mapping system of the PRISM Climate Group at Oregon State University. The PRISM mapping system combined climate normals gathered from weather stations to estimate the general climate patterns for the proposed AVA and the surrounding regions. Climate normals are only calculated every 10 years, using 30 years of data, and at the time the petition was submitted, the most recent climate normals available were from the period of 1971–2000.

growing season temperatures and GDD units of the proposed Fountaingrove District AVA to those of the surrounding established AVAs.

AVA name	Direction from proposed AVA	Average growing season temperature (Celsius)	Average GDD unit accumulation	Winkler category
Fountaingrove District	N/A	17.7	1,663	Warm Region II.
Russian River Valley	West	17.1	1,520	Region II.
Bennett Valley	Southwest	17.4	1,589	Region II.
Chalk Hill	North	17.6	1,634	Warm Region II.
Sonoma Valley	South	17.8	1,676	Cool Region III.
Knights Valley	North	18.3	1,788	Region III.
Spring Mountain District	East	18.3	1,785	Region III.
Diamond Mountain District	East	18.7	1,818	Region III.

According to the table, the proposed Fountaingrove District AVA is generally warmer than the region to the west and cooler than the region to the east. The temperatures within the Chalk Hill AVA, which is north of the proposed AVA, are similar to those in the Fountaingrove District; however, the Knights Valley AVA, which is also north of the proposed AVA, has significantly more GDD units than the proposed Fountaingrove District AVA because the higher hillsides of the Knights Valley AVA shelter its broad valley floor from the marine breezes. The Sonoma Valley AVA, immediately adjacent to the southern boundary of the proposed Fountaingrove District AVA, is slightly warmer.

The petition states that although the temperature differences between the proposed Fountaingrove District AVA and the surrounding regions appear slight, they do have a significant effect on viticulture. The petition includes a chart grouping grape varietals by maturation times based on average growing season temperatures.[3] According to the chart, most varietals only ripen successfully (meaning they achieve desired levels of acidity, sugars, and flavors) within a 3-to-4 degree C range of temperatures. As a result, cool-climate pinot noir grapes ripen successfully in the cooler temperatures of the neighboring Russian River Valley AVA, but do not grow reliably within the proposed Fountaingrove District AVA, according to the petition.

The petition notes that even the same varietal of grapes grown at opposite ends of the small range of ''optimal'' temperatures will have different characteristics. For example, the petition states that chardonnay grown in a Warm Region II area, such as the proposed Fountaingrove District AVA, will have a tropical fruit flavor, whereas chardonnay grown in a cooler area will produce a drier, more mineral-like flavor. Likewise, cabernet sauvignon, one of the most commonly grown grapes in the proposed AVA, produces a lower alcohol wine with subtle flavors when grown in a Warm Region II area, but often produces wines with higher alcohol content and riper flavors when grown in Region III and Region IV areas. Vintners consider these flavor and alcohol differences when producing and blending their wines.

Soils

The soils within the proposed Fountaingrove District AVA are derived primarily from Sonoma Volcanic and Franciscan Formation bedrock. The volcanic soils include Goulding, Spreckels, Laniger, and Felta series soils, which consist of pumiceous ash-flow tuff, and Guenoc and Toomes series soils, which consist of basalt lava. These volcanic soils are described in the petition as being well-drained and having a balance of nutrients favorable for grape-growing. Soils derived from the Franciscan Complex include the Boomer and Henneke series. Henneke soils contain the mineral serpentine, which has high levels of nickel and can be toxic to grapevines unless the soil is ameliorated to lower the levels. Soils of the Boomer series have desirably high levels of iron, which is an essential element for vine growth and fruit development.

The following table shows the soil types found within the proposed Fountaingrove District AVA and the surrounding established AVAs.

Soil series	AVA name and direction from proposed AVA						Proposed Fountaingrove District
	Chalk Hill (North)	Russian River Valley (West)	Sonoma Valley (South)	Knights Valley (North)	Diamond Mountain District (East)	Spring Mountain District (East)	
Sonoma Volcanics							
Goulding			X	X	X	X	X
Laniger				X			X
Felta	X	X	X				X
Forward			X	X	X	X	
Spreckels	X	X	X				X
Toomes	X	X		X			X
Guenoc							X
Kidd					X	X	
Sobrante						X	X

[3] Gregory V. Jones et al., ''Climate and Wine: Quality Issues in a Warmer World,'' Climate Change, pages 319–343, December 1, 2005.

Soil series	AVA name and direction from proposed AVA						Proposed Fountaingrove District
	Chalk Hill (North)	Russian River Valley (West)	Sonoma Valley (South)	Knights Valley (North)	Diamond Mountain District (East)	Spring Mountain District (East)	
Hambright					X		
Franciscan Complex							
Dibble	X	X					
Maymen						X	X
Laughlin		X		X			
Boomer					X	X	X
Aiken					X	X	X
Red Hill			X	X			
Suther				X			X
Yorkville *		X		X			X
Henneke *						X	X
Raynor *							X
Montara *	X	X					X
River and Terrace Deposits							
Cotati		X					
Wright		X	X				
Clear Lake		X	X				
Arbuckle	X	X		X			
Huichica	X	X	X				
Yolo	X	X		X			X
Zamora		X	X				
Pleasanton						X	X
Cortina				X			
Haire	X	X	X	X			X
Clough			X	X			
Positas	X	X					
Wilson Grove Formation							
Goldridge		X					

* Indicates soil contains serpentine.

As shown in the table, the proposed Fountaingrove District AVA has a greater diversity of soils than the surrounding AVAs. The proposed AVA has fewer soils derived from river and terrace deposits than most of the surrounding established AVAs. The petition states that soils comprised of river and terrace deposits are generally not as well-drained as volcanic soils and may require artificial drainage. Compared to the surrounding regions, the proposed AVA also has more soils that contain nickel-rich serpentine, which can be toxic to grapevines in high levels. Therefore, soils that contain serpentine must often be ameliorated in order to reduce the nickel levels so that the vines can grow.

Topography

The proposed Fountaingrove District AVA is located on the western slopes of the Mayacmas Mountains, northeast of the city of Santa Rosa. The topography consists of low rolling hills and higher, steeper mountains. Although there are some narrow floodplains along creeks, the proposed AVA lacks the broad valley floors and floodplains that characterize several of the surrounding established AVAs. The slopes within the proposed AVA are primarily oriented towards the southwest. Elevations range from approximately 400 feet to approximately 2,200 feet, and all of the vineyards within the proposed Fountaingrove District AVA are planted at elevations between 450 and 2,115 feet.

Topography affects viticulture within the proposed AVA. According to the petition, the hillsides form a ''thermal belt'' that traps warm air, resulting in nighttime temperatures that are warmer than those of the lower, flatter valleys of the surrounding regions. The warmer temperatures reduce the risk of frost in the late spring and early fall. The southwest aspect of most of the slopes within the proposed AVA allows vineyards to be planted where they can receive the maximum amount of sunlight and warmth.

Immediately to the west of the proposed AVA is the Russian River Valley AVA. Elevations in the region begin at approximately 600 feet along the border shared with the proposed Fountaingrove District AVA and become lower and flatter southwest of the proposed AVA, within the city of Santa Rosa. Elevations within much of the city are between 100 and 200 feet.

To the north of the proposed AVA are the Chalk Hill and Knights Valley AVAs. The Chalk Hill AVA has a mountainous terrain with elevations similar to those of the proposed Fountaingrove District AVA, but the soils within the Chalk Hill AVA distinguish it from the proposed AVA, as discussed later in this document. The Knights Valley AVA has generally lower elevations and contains the broad, flat Knights Valley and Franz Valley.

To the east of the proposed AVA are the Calistoga, Spring Mountain District, and Diamond Mountain District AVAs, which have elevations and terrain similar to the proposed AVA. However, moving east, the mountainous topography of the Calistoga AVA quickly lowers to elevations of around 300 feet within the broad, flat Napa Valley. The slopes of the three established AVAs primarily face

northeast, compared to the southwest-facing slopes of the proposed AVA. Because the established AVAs are located mostly on the lee side of the Mayacmas Mountains, they are subject to less maritime influence than the proposed Fountaingrove District AVA.

To the south of the proposed AVA, the Sonoma Valley AVA is marked by a long, flat valley surrounded by the Mayacmas Mountains to the east and the Sonoma Mountains to the west. The Sonoma Valley AVA receives less of the cooling marine air than the proposed Fountaingrove District AVA because of the shielding effect of the Sonoma Mountains.

Summary of Distinguishing Features

In summary, the temperature, soils, and topography of the proposed Fountaingrove District AVA distinguish it from the surrounding adjacent AVAs. Compared to the proposed Fountaingrove District AVA, the Chalk Hill and Knights Valley AVAs to the north both have more soils derived from river and terrace deposits. Additionally, the Knights Valley AVA has warmer temperatures and significantly larger valleys than the proposed AVA. To the east, the Calistoga, Spring Mountain District, and Diamond Mountain District AVAs are warmer, have less soil diversity, and have mountain slopes oriented to the northeast. To the south, the Sonoma Valley AVA is warmer, has more alluvial soils, and is dominated by a large, flat valley rather than rolling hills and steeper mountains. To the west, the Russian River Valley AVA has cooler temperatures, more alluvial soils, and generally lower and flatter elevations.

Comparison of the Proposed Fountaingrove District AVA to the Existing North Coast AVA

The North Coast AVA was established by T.D. ATF–145, published in the **Federal Register** on September 21, 1983 (48 FR 42973). It includes all or portions of Napa, Sonoma, Mendocino, Lake, Marin, and Solano Counties, California. TTB notes that the North Coast AVA contains all or portions of approximately 40 established AVAs, in addition to the area covered by the proposed Fountaingrove District AVA. In the conclusion of the ''Geographical Features'' section of the preamble, T.D. ATF–145 states that ''[d]ue to the enormous size of the North Coast, variations exist in climatic features such as temperature, rainfall, and fog intrusion.''

The proposed Fountaingrove District AVA shares the basic viticultural feature of the North Coast AVA—the marine influence that moderates growing season temperatures in the area. However, the proposed AVA is much more uniform in its temperature, soils, and topography than the diverse, multicounty North Coast AVA. In this regard, TTB notes that T.D. ATF–145 specifically states that ''approval of this viticultural area does not preclude approval of additional areas, either wholly contained with the North Coast, or partially overlapping the North Coast,'' and that ''smaller viticultural areas tend to be more uniform in their geographical and climatic characteristics, while very large areas such as the North Coast tend to exhibit generally similar characteristics, in this case the influence of maritime air off of the Pacific Ocean and San Pablo Bay.'' Thus, the proposal to establish the Fountaingrove District AVA is not inconsistent with what was envisioned when the North Coast AVA was established.

TTB Determination

TTB concludes that the petition to establish the approximately 38,000-acre Fountaingrove District AVA merits consideration and public comment, as invited in this notice.

Boundary Description

See the narrative description of boundary for the petitioned-for AVA in the proposed regulatory text published at the end of this proposed rule.

Maps

The petitioner provided the required maps, and they are listed below in the proposed regulatory text.

Impact on Current Wine Labels

Part 4 of the TTB regulations prohibits any label reference on a wine that indicates or implies an origin other than the wine's true place of origin. For a wine to be labeled with an AVA name or with a brand name that includes an AVA name, at least 85 percent of the wine must be derived from grapes grown within the area represented by that name, and the wine must meet the other conditions listed in § 4.25(e)(3) of the TTB regulations (27 CFR 4.25(e)(3)). If the wine is not eligible for labeling with an AVA name and that name appears in the brand name, then the label is not in compliance, and the bottler must change the brand name and obtain approval of a new label. Similarly, if the AVA name appears in another reference on the label in a misleading manner, the bottler would have to obtain approval of a new label. Different rules apply if a wine has a brand name containing an AVA name that was used as a brand name on a label approved before July 7, 1986. See § 4.39(i)(2) of the TTB regulations (27 CFR 4.39(i)(2)) for details.

If TTB establishes this proposed AVA, its name, ''Fountaingrove District,'' will be recognized as a name of viticultural significance under § 4.39(i)(3) of the TTB regulations (27 CFR 4.39(i)(3)). The text of the proposed regulation clarifies this point. Consequently, wine bottlers using the name ''Fountaingrove District'' in a brand name, including a trademark, or in another label reference as to the origin of the wine, would have to ensure that the product is eligible to use the AVA name as an appellation of origin if this proposed rule is adopted as a final rule. TTB does not believe that ''Fountaingrove,'' standing alone, should have viticultural significance if the proposed AVA is established, due to the current use of ''Fountaingrove,'' standing alone, as a brand name on wine labels. Accordingly, the proposed part 9 regulatory text set forth in this document specifies only the full name ''Fountaingrove District'' as a term of viticultural significance for purposes of part 4 of the TTB regulations. Wine labels using either ''Fountaingrove'' or ''Fountain Grove,'' standing alone, would not be affected if the proposed Fountaingrove District AVA is established.

The approval of the proposed Fountaingrove District AVA would not affect any existing AVA, and any bottlers using ''North Coast'' as an appellation of origin or in a brand name for wines made from grapes grown within the North Coast AVA would not be affected by the establishment of this new AVA. The establishment of the proposed Fountaingrove District AVA would allow vintners to use ''Fountaingrove District'' and ''North Coast'' as appellations of origin for wines made from grapes grown within the proposed Fountaingrove District AVA, if the wines meet the eligibility requirements for the appellation.

Public Participation

Comments Invited

TTB invites comments from interested members of the public on whether it should establish the proposed AVA. TTB is also interested in receiving comments on the sufficiency and accuracy of the name, boundary, soils, climate, and other required information submitted in support of the petition. In addition, given the proposed Fountaingrove District AVA's location within the existing North Coast AVA, TTB is interested in comments on whether the evidence submitted in the

petition regarding the distinguishing features of the proposed AVA sufficiently differentiates it from the existing North Coast AVA. TTB is also interested in comments whether the geographic features of the proposed AVA are so distinguishable from the surrounding North Coast AVA that the proposed Fountaingrove District AVA should no longer be part of that AVA. Please provide any available specific information in support of your comments.

Because of the potential impact of the establishment of the proposed Fountaingrove District AVA on wine labels that include the term ''Fountaingrove District'' as discussed above under Impact on Current Wine Labels, TTB is particularly interested in comments regarding whether there will be a conflict between the proposed AVA name and currently used brand names. If a commenter believes that a conflict will arise, the comment should describe the nature of that conflict, including any anticipated negative economic impact that approval of the proposed AVA will have on an existing viticultural enterprise. TTB is also interested in receiving suggestions for ways to avoid conflicts, for example, by adopting a modified or different name for the AVA.

Submitting Comments

You may submit comments on this notice by using one of the following three methods (please note that TTB has a new address for comments submitted by U.S. Mail):

- *Federal e-Rulemaking Portal:* You may send comments via the online comment form posted with this notice within Docket No. TTB–2014–0006 on ''Regulations.gov,'' the Federal e-rulemaking portal, at *http://www.regulations.gov.* A direct link to that docket is available under Notice No. 144 on the TTB Web site at *http://www.ttb.gov/wine/wine-rulemaking.shtml.* Supplemental files may be attached to comments submitted via Regulations.gov. For complete instructions on how to use Regulations.gov, visit the site and click on the ''Help'' tab.
- *U.S. Mail:* You may send comments via postal mail to the Director, Regulations and Rulings Division, Alcohol and Tobacco Tax and Trade Bureau, 1310 G Street NW., Box 12, Washington, DC 20005.
- *Hand Delivery/Courier:* You may hand-carry your comments or have them hand-carried to the Alcohol and Tobacco Tax and Trade Bureau, 1310 G Street NW., Suite 200–E, Washington, DC 20005.

Please submit your comments by the closing date shown above in this notice. Your comments must reference Notice No. 144 and include your name and mailing address. Your comments also must be made in English, be legible, and be written in language acceptable for public disclosure. TTB does not acknowledge receipt of comments, and TTB considers all comments as originals.

In your comment, please clearly state if you are commenting for yourself or on behalf of an association, business, or other entity. If you are commenting on behalf of an entity, your comment must include the entity's name as well as your name and position title. If you comment via Regulations.gov, please enter the entity's name in the ''Organization'' blank of the online comment form. If you comment via postal mail or hand delivery/courier, please submit your entity's comment on letterhead.

You may also write to the Administrator before the comment closing date to ask for a public hearing. The Administrator reserves the right to determine whether to hold a public hearing.

Confidentiality

All submitted comments and attachments are part of the public record and subject to disclosure. Do not enclose any material in your comments that you consider to be confidential or inappropriate for public disclosure.

Public Disclosure

TTB will post, and you may view, copies of this notice, selected supporting materials, and any online or mailed comments received about this proposal within Docket No. TTB–2014–0006 on the Federal e-rulemaking portal, Regulations.gov, at *http://www.regulations.gov.* A direct link to that docket is available on the TTB Web site at *http://www.ttb.gov/wine/wine_rulemaking.shtml* under Notice No. 144. You may also reach the relevant docket through the Regulations.gov search page at *http://www.regulations.gov.* For information on how to use Regulations.gov, click on the site's ''Help'' tab.

All posted comments will display the commenter's name, organization (if any), city, and State, and, in the case of mailed comments, all address information, including email addresses. TTB may omit voluminous attachments or material that the Bureau considers unsuitable for posting.

You may also view copies of this notice, all related petitions, maps and other supporting materials, and any electronic or mailed comments that TTB receives about this proposal by appointment at the TTB Information Resource Center, 1310 G Street NW., Washington, DC 20005. You may also obtain copies at 20 cents per 8.5- x 11-inch page. Please note that TTB is unable to provide copies of the USGS quadrangle maps or any similarly sized documents that may be included as part of the AVA petition. Contact TTB's information specialist at the above address or by telephone at 202–453–2270 to schedule an appointment or to request copies of comments or other materials.

Regulatory Flexibility Act

TTB certifies that this proposed regulation, if adopted, would not have a significant economic impact on a substantial number of small entities. The proposed regulation imposes no new reporting, recordkeeping, or other administrative requirement. Any benefit derived from the use of a viticultural area name would be the result of a proprietor's efforts and consumer acceptance of wines from that area. Therefore, no regulatory flexibility analysis is required.

Executive Order 12866

It has been determined that this proposed rule is not a significant regulatory action as defined by Executive Order 12866 of September 30, 1993. Therefore, no regulatory assessment is required.

Drafting Information

Karen A. Thornton of the Regulations and Rulings Division drafted this notice of proposed rulemaking.

List of Subjects in 27 CFR Part 9

Wine.

Proposed Regulatory Amendment

For the reasons discussed in the preamble, TTB proposes to amend title 27, chapter I, part 9, Code of Federal Regulations, as follows:

PART 9—AMERICAN VITICULTURAL AREAS

■ 1. The authority citation for part 9 continues to read as follows:

Authority: 27 U.S.C. 205.

Subpart C—Approved American Viticultural Areas

■ 2. Subpart C is amended by adding § 9.____ to read as follows:

§ 9.____ Fountaingrove District.

(a) *Name.* The name of the viticultural area described in this section is

''Fountaingrove District.'' For purposes of part 4 of this chapter, ''Fountaingrove District'' is a term of viticultural significance.

(b) *Approved maps.* The four United States Geological Survey (USGS) 1:24,000 scale topographic maps used to determine the boundary of the Fountaingrove District viticultural area are titled:

(1) Mark West Springs, CA; 1993;

(2) Calistoga, CA; 1997;

(3) Kenwood, CA; 1954; photorevised 1980; and

(4) Santa Rosa, CA; 1994.

(c) *Boundary.* The Fountaingrove District viticultural area is located in Sonoma County, California. The boundary of the Fountaingrove District viticultural area is as described below:

(1) The beginning point is on the Mark West Springs map at the intersection of the shared Sonoma–Napa County line with Petrified Forest Road, section 3, T8N/R7W.

(2) From the beginning point, proceed southeasterly along the Sonoma–Napa County line, crossing onto the Calistoga map and then the Kenwood map, to the marked 2,530-peak of an unnamed mountain, section 9, T7N/R6W; then

(3) Proceed west-southwest in a straight line to the marked 2,730-foot summit of Mt. Hood, section 8, T7N/R6W; then

(4) Proceed west-northwest in a straight line to the marked 1,542-foot summit of Buzzard Peak, section 11, T7N/R7W; then

(5) Proceed west-southwest in a straight line, crossing onto the Santa Rosa map, to the intersection of State Highway 12 and Los Alamos Road; then

(6) Proceed due north in a straight line to the southern boundary of section 9, T7N/R7W; then

(7) Proceed west-northwest along the southern boundaries of sections 9, 4, and 5, T7N/R7W, to the western boundary of the Los Guilicos Land Grant; then

(8) Proceed west-southwest along the southern boundaries of sections 5, 6, and 7, T7N/R7W; then continue west-southwest along the southern boundaries of sections 12 and 11, T7N/R8W, to the point where the section 11 boundary becomes concurrent with an unnamed light-duty road known locally as Lewis Road; and then continue west-southwest along Lewis Road to the road's intersection with Mendocino Avenue in Santa Rosa; then

(9) Proceed north-northwesterly along Mendocino Avenue to the road's intersection with an unnamed road known locally as Bicentennial Way; then

(10) Proceed north in a straight line, crossing through the marked 906-foot elevation peak in section 35, T8N/R8W, and, crossing on to the Mark West Springs map, continue to the line's intersection with Mark West Springs Road, section 26, T8N/R8W; then

(11) Proceed northerly along Mark West Springs Road, which turns easterly and becomes Porter Creek Road, to the road's intersection with Franz Valley Road, section 12, T8N/R8W; then

(12) Proceed northeasterly along Franz Valley Road to the western boundary of section 6, T8N/R7W; then

(13) Proceed south along the western boundary of section 6, T8N/R7W, to the southwest corner of section 6; then

(14) Proceed east, then east-northeast along the southern boundaries of sections 6, 5, and 4, T8N/R7W, to the southeast corner of section 4; then

(15) Proceed north along the eastern boundary of section 4, T8N/R7W, to the Sonoma–Napa County line; then

(16) Proceed easterly along the Sonoma–Napa County line to the beginning point.

Dated: June 23, 2014.

John J. Manfreda,

Administrator.

[FR Doc. 2014–15212 Filed 6–27–14; 8:45 am]

BILLING CODE 4810–31–P

ENVIRONMENTAL PROTECTION AGENCY

40 CFR Part 52

[EPA–R05–OAR–2014–0242; FRL–9912–86-Region 5]

Approval and Promulgation of Air Quality Implementation Plans; Wisconsin; Proposed Approval of Revisions to PSD Program

AGENCY: Environmental Protection Agency (EPA).

ACTION: Proposed rule.

SUMMARY: The Environmental Protection Agency (EPA) is proposing to approve a revision to the Wisconsin State Implementation Plan (SIP), submitted by the Wisconsin Department of Natural Resources (WDNR) to EPA on March 12, 2014, for parallel processing. The submittal modifies Wisconsin's Prevention of Significant Deterioration (PSD) program to identify precursors for particulate matter of less than 2.5 micrometers ($PM_{2.5}$), includes the significant emissions rates for $PM_{2.5}$ and revises its definitions of $PM_{2.5}$ emissions and emissions of particulate matter of less than 10 micrometers (PM_{10}). WDNR requested these revisions to address disapprovals of two submissions meant to address requirements of the 2008 Implementation of New Source Review (NSR) Program for $PM_{2.5}$ and to address a partial disapproval, under section 110 of the Clean Air Act (CAA), of what is commonly referred to as an ''infrastructure'' SIP. EPA is proposing approval of Wisconsin's March 12, 2014, SIP revision because the Agency has made the preliminary determination that this SIP revision is in accordance with the CAA and applicable EPA regulations regarding PSD.

DATES: Comments must be received on or before July 30, 2014.

ADDRESSES: Submit your comments, identified by Docket ID No. EPA–R05–OAR–2014–0242, by one of the following methods:

1. *www.regulations.gov:* Follow the on-line instructions for submitting comments.

2. *Email: damico.genevieve@epa.gov.*

3. *Fax:* (312) 385–5501.

4. *Mail:* Genevieve Damico, Chief, Air Permits Section, Air Programs Branch (AR–18J), U.S. Environmental Protection Agency, 77 West Jackson Boulevard, Chicago, Illinois 60604.

5. *Hand Delivery:* Genevieve Damico, Chief, Air Permits Section, Air Programs Branch (AR–18J), U.S. Environmental Protection Agency, 77 West Jackson Boulevard, Chicago, Illinois 60604. Such deliveries are only accepted during the Regional Office normal hours of operation, and special arrangements should be made for deliveries of boxed information. The Regional Office official hours of business are Monday through Friday, 8:30 a.m. to 4:30 p.m., excluding Federal holidays.

Instructions: Direct your comments to Docket ID No. EPA–R05–OAR–2014–0242. EPA's policy is that all comments received will be included in the public docket without change and may be made available online at *www.regulations.gov,* including any personal information provided, unless the comment includes information claimed to be Confidential Business Information (CBI) or other information whose disclosure is restricted by statute. Do not submit information that you consider to be CBI or otherwise protected through *www.regulations.gov* or email. The *www.regulations.gov* Web site is an ''anonymous access'' system, which means EPA will not know your identity or contact information unless you provide it in the body of your comment. If you send an email comment directly to EPA without going through *www.regulations.gov* your email address will be automatically captured and included as part of the comment that is placed in the public docket and made available on the Internet. If you

submit an electronic comment, EPA recommends that you include your name and other contact information in the body of your comment and with any disk or CD–ROM you submit. If EPA cannot read your comment due to technical difficulties and cannot contact you for clarification, EPA may not be able to consider your comment. Electronic files should avoid the use of special characters, any form of encryption, and be free of any defects or viruses. For additional instructions on submitting comments, go to section I of the **SUPPLEMENTARY INFORMATION** section of this document.

Docket: All documents in the docket are listed in the *www.regulations.gov* index. Although listed in the index, some information is not publicly available, *e.g.,* CBI or other information whose disclosure is restricted by statute. Certain other material, such as copyrighted material, will be publicly available only in hard copy. Publicly available docket materials are available either electronically in *www.regulations.gov* or in hard copy at the Environmental Protection Agency, Region 5, Air and Radiation Division, 77 West Jackson Boulevard, Chicago, Illinois 60604. This facility is open from 8:30 a.m. to 4:30 p.m., Monday through Friday, excluding Federal holidays. We recommend that you telephone Andrea Morgan, Environmental Engineer, at (312) 353–6058 before visiting the Region 5 office.

FOR FURTHER INFORMATION CONTACT: Andrea Morgan, Environmental Engineer, Air Permits Section, Air Programs Branch (AR–18J), Environmental Protection Agency, Region 5, 77 West Jackson Boulevard, Chicago, Illinois 60604, (312) 353–6058, *Morgan.andrea@epa.gov.*

SUPPLEMENTARY INFORMATION: Throughout this document whenever ''we,'' ''us,'' or ''our'' is used, we mean EPA. This supplementary information section is arranged as follows:

I. What should I consider as I prepare my comments for EPA?
II. What is the background for this proposed action?
III. Wisconsin's Submittal for Parallel Processing
IV. What is EPA's analysis of Wisconsin's proposed SIP Revision?
V. What action is EPA taking?
VI. Statutory and Executive Order Reviews

I. What should I consider as I prepare my comments for EPA?

When submitting comments, remember to:

1. Identify the rulemaking by docket number and other identifying information (subject heading, **Federal Register** date and page number).
2. Follow directions—EPA may ask you to respond to specific questions or organize comments by referencing a Code of Federal Regulations (CFR) part or section number.
3. Explain why you agree or disagree; suggest alternatives and substitute language for your requested changes.
4. Describe any assumptions and provide any technical information and/or data that you used.
5. If you estimate potential costs or burdens, explain how you arrived at your estimate in sufficient detail to allow for it to be reproduced.
6. Provide specific examples to illustrate your concerns, and suggest alternatives.
7. Explain your views as clearly as possible, avoiding the use of profanity or personal threats.
8. Make sure to submit your comments by the comment period deadline.

II. What is the background for this proposed action?

In May 2008, EPA finalized regulations to implement the NSR Implementation Rule for $PM_{2.5}$ in the PSD and Nonattainment NSR (NNSR) programs (2008 $PM_{2.5}$ NSR Rule). The regulation included the creation of the major source threshold, significant emissions rate and offset ratios for $PM_{2.5}$ and the identification of $PM_{2.5}$ precursors. Additionally, the rule required states to consider emissions which may condense to form particulate matter at ambient temperatures, known as condensables, in permitting decisions by January 1, 2011.

WDNR submitted revisions to its PSD and NNSR programs that were intended to address the 2008 $PM_{2.5}$ NSR Rule in October 2010. On October 29, 2012, EPA finalized a narrow disapproval of provisions of Wisconsin's infrastructure SIP submittal that were intended to identify precursors to $PM_{2.5}$ and identify $PM_{2.5}$ and PM_{10} condensables (*see* 77 FR 65478), because the submittal lacked specific references to condensables for $PM_{2.5}$ and PM_{10} for applicability determinations and permitting emissions limits, consistent with the 2008 NSR Rule.

On May 12, 2011, and on March 5, 2012, WDNR submitted revisions to its SIP to comply with the 2008 $PM_{2.5}$ NSR Rule. On July 25, 2013, EPA finalized disapproval of Wisconsin's submissions because the submissions did not explicitly define the precursors of $PM_{2.5}$, nor did they contain the prescribed language to ensure that condensables are to be regulated within the $PM_{2.5}$ and PM_{10} emission limits in Wisconsin's PSD and NNSR programs. (*see* 78 FR 44881)

The infrastructure SIP requirements contained in sections 110(a)(1) and (2) of the CAA are designed to ensure that the structural components of each state's air quality management program are adequate to meet the state's responsibilities under the CAA. States are required to submit infrastructure SIPs to ensure that their SIPs provide for implementation, maintenance, and enforcement of the National Ambient Air Quality Standards (NAAQS).

Under section 110(a)(2)(C), states are required to include a program for the regulation of construction of new or modified stationary sources to meet new NSR requirements under the PSD and NNSR programs, and EPA evaluates, in determining whether states have satisfied these requirements, the following: (i) Provisions that explicitly identify oxides of nitrogen (NO_X) as a precursor to ozone in the PSD program; (ii) identification of precursors to $PM_{2.5}$ and the identification of $PM_{2.5}$ and PM_{10} condensables in the PSD program; (iii) $PM_{2.5}$ increments in the PSD program; and, (iv) greenhouse gas permitting and the ''Tailoring Rule.'' This section also requires states to demonstrate that their existing SIPs meet current EPA requirements with respect to the NSR program. For example, states must adopt definitions that are identical to, or more stringent than, EPA's definitions. Of the structural PSD elements in the context of infrastructure SIPs, today's rulemaking only addresses Wisconsin's satisfaction of provisions that explicitly identify precursors to $PM_{2.5}$, and the identification of $PM_{2.5}$ and PM_{10} condensables.

The final disapproval of the submission to address the 2008 $PM_{2.5}$ NSR Rule and the final partial disapproval of the infrastructure SIP triggered the requirement under section 110(c) that EPA promulgate a Federal Implementation Plan (FIP) no later than two years from the effective dates of the disapprovals, unless the state corrects the deficiencies and the Administrator approves the plan or plan revision before the Administrator promulgates such FIP.

III. Wisconsin's Submittal for Parallel Processing

On March 12, 2014, WDNR submitted a draft SIP revision request to EPA to revise portions of its PSD and NNSR programs to address deficiencies identified in EPA's previous partial infrastructure SIP disapproval. On April 15, 2014, WDNR submitted a supplement to its request with

additional information to support its submittal. Since the rules WDNR submitted on March 12, 2014, are consistent with the Federal PSD rules, final approval of this SIP revision will resolve the deficiencies previously identified by EPA in its October 29, 2012, partial disapproval and July 25, 2013, disapproval. Wisconsin submitted revisions to its rules NR 400, 405, and 408 of the Wisconsin Administrative Code. The submittal requests that EPA approve the following revised rules into Wisconsin's SIP: (1) NR 400.02(123m) and (124); (2) NR 405.02(21)(b)5.a. and b. and 6; (3) NR 405.02(25i)(a), (ag) and (ar); (4) 405.02(27)(a)5m; and (5) NR 408.02(20)(e) 5.a and b. and 6. At this time EPA is only proposing to take action on the portions that pertain to the identification of precursors to $PM_{2.5}$ and identification of $PM_{2.5}$ and PM_{10} condensables. Specifically, today's proposed rulemaking is limited to the following provisions: (1) NR 400.02(123m) and (124); (2) NR 405.02(25i)(ag); (3) NR 405.02(25i)(ar)2. and 3.; and, (4) 405.02(27)(a)5m. EPA proposed approval of the remainder of WDNR's submission as it pertains to NO_X as a precursor to ozone and the definition of major modification in a May 2, 2014 proposed approval (79 FR 25063).

Because portions of this draft SIP revision are not yet state-effective, Wisconsin requested that EPA ''parallel process'' the SIP revision. Under this procedure, the EPA Regional Office works closely with the state while developing new or revised regulations. Generally, the state submits a copy of the proposed regulation or other revisions to EPA before concluding its rulemaking process. EPA reviews this proposed state action and prepares a proposed rulemaking action. EPA publishes this proposed rulemaking in the **Federal Register** and solicits public comment in approximately the same timeframe during which the state finalizes its rulemaking process.

After Wisconsin submits the formal state-effective SIP revision request, EPA will prepare a final rulemaking action for the SIP revision. If changes are made to the SIP revision after EPA's proposed rulemaking, such changes must be acknowledged in EPA's final rulemaking action. If the changes are significant, then EPA may be obliged to repropose the action.

IV. What is EPA's analysis of Wisconsin's proposed SIP revision?

EPA has evaluated WDNR's proposed revision to the Wisconsin SIP in accordance with the Federal requirements governing state permitting programs. The revisions described in section III above are intended to update the Wisconsin SIP to comply with the current rules and address deficiencies identified by EPA in the its previous SIP disapprovals. As discussed below, EPA is proposing to approve these revisions because they meet Federal requirements.

The 2008 $PM_{2.5}$ NSR Rule finalized several new requirements for SIPS to address sources that emit direct $PM_{2.5}$ and other pollutants that contribute to secondary $PM_{2.5}$ formation. One of these requirements is for PSD permits to address pollutants responsible for the secondary formation of $PM_{2.5,}$ otherwise known as precursors. In the 2008 $PM_{2.5}$ NSR Rule, EPA identified precursors to $PM_{2.5}$ for the PSD program to be sulfur dioxide (SO_2) and NO_X (unless the state demonstrates to the Administrator's satisfaction or EPA demonstrates that NO_X emissions in an area are not a significant contributor to that area's ambient $PM_{2.5}$ concentrations). The 2008 $PM_{2.5}$ NSR Rule also specifies that volatile organic compounds (VOCs) are not considered to be precursors to $PM_{2.5}$ in the PSD program unless the state demonstrates to the Administrator's satisfaction or EPA demonstrates that emissions of VOCs in an area are significant contributors to that area's ambient $PM_{2.5}$ concentrations.

The explicit references to $SO_{2,}$ NO_X, and VOCs as they pertain to secondary $PM_{2.5}$ formation are codified at 40 CFR 51.166(b)(49)(i)(*b*) and 40 CFR 52.21(b)(50)(i)(*b*). As part of identifying pollutants that are precursors to $PM_{2.5,}$ the 2008 $PM_{2.5}$ NSR Rule also required states to revise the definition of ''significant'' as it relates to a net emissions increase or the potential of a source to emit pollutants. Specifically, 40 CFR 51.166(b)(23)(i) and 40 CFR 52.21(b)(23)(i) define ''significant'' for $PM_{2.5}$ to mean the following emissions rates: 10 tons per year (tpy) of direct $PM_{2.5}$; 40 tpy of SO_2; and 40 tpy of NO_X (unless the state demonstrates to the Administrator's satisfaction or EPA demonstrates that NO_X emissions in an area are not a significant contributor to that area's ambient $PM_{2.5}$ concentrations). WDNR has revised the definition of ''regulated NSR air contaminant'' for the PSD program in 405.02(25i)(ar)2. and 3., consistent with EPA's own PSD regulations. WDNR has also revised its PSD significant emission rates to include $PM_{2.5}$ and its precursors in NR 405.02(27)(a)5m, consistent with EPA's PSD regulations.

The 2008 $PM_{2.5}$ NSR Rule did not require states to immediately account for gases that could condense to form particulate matter, known as condensables, in $PM_{2.5}$ and PM_{10} emission limits in PSD permits. Instead, EPA determined that states had to account for $PM_{2.5}$ and PM_{10} condensables for applicability determinations and in establishing emissions limitations for $PM_{2.5}$ and PM_{10} in PSD permits beginning on or after January 1, 2011. This requirement is codified in 40 CFR 51.166(b)(49)(i)(*a*) and 40 CFR 52.21(b)(50)(i)(*a*). WDNR's revisions, specifically at NR 400.02(123m) and (124) and NR 405.02(25i)(ag), are consistent with the PSD requirements obligated by the 2008 $PM_{2.5}$ NSR Rule as they relate to $PM_{2.5}$ and PM_{10} condensables.

The 2008 $PM_{2.5}$ NSR Rule also codified requirements for $PM_{2.5}$ in the NNSR program. When WDNR initially submitted revisions to its SIP meant to address the 2008 $PM_{2.5}$ NSR Rule, the Milwaukee-Racine area was designated as nonattainment for the 2006 $PM_{2.5}$ 24-hour NAAQS, and WDNR submitted rules pertaining to NNSR in addition to PSD. Thus, EPA's disapproval of this submission created an obligation for WDNR to address the deficiencies identified in both the PSD and NNSR programs. On April 22, 2014, EPA finalized approval of Wisconsin's request to redesignate the Milwaukee-Racine $PM_{2.5}$ area to attainment for the 2006 $PM_{2.5}$ 24-hour NAAQS. As a result there are no areas designated as nonattainment for $PM_{2.5}$ located in Wisconsin. Since there are no areas designated as nonattainment for $PM_{2.5}$ in Wisconsin, Wisconsin is no longer obligated to submit a NNSR plan for $PM_{2.5}$ and there is no longer a FIP obligation for nonattainment NSR. Should an area be designated as nonattainment for $PM_{2.5}$, Wisconsin will be required to revise its rules to include a plan to address $PM_{2.5}$ in NNSR.

Wisconsin's requested revisions are consistent with the applicable requirements found in Federal regulations; therefore EPA is proposing to approve the requested revisions.

V. What action is EPA taking?

EPA is proposing to approve the revisions to Wisconsin rules NR 400, and NR 405 submitted by the State on March 12, 2014, and April 15, 2014, for approval into the SIP. The revisions submitted, described in section III, above, are consistent with Federal regulations governing state permitting programs. *See* section IV, above. EPA is also soliciting comment on this proposed approval. If EPA finalizes this proposed approval of WDNR's requested revisions, the FIP clocks started by EPA's October 29, 2012, narrow

disapproval and July 25, 2013, disapproval will stop.

VI. Statutory and Executive Order Reviews

Under the CAA, the Administrator is required to approve a SIP submission that complies with the provisions of the CAA and applicable Federal regulations. 42 U.S.C. 7410(k); 40 CFR 52.02(a). Thus, in reviewing SIP submissions, EPA's role is to approve state choices, provided that they meet the criteria of the CAA. Accordingly, this action merely approves state law as meeting Federal requirements and does not impose additional requirements beyond those imposed by state law. For that reason, this action:

- Is not a ''significant regulatory action'' subject to review by the Office of Management and Budget under Executive Order 12866 (58 FR 51735, October 4, 1993);
- Does not impose an information collection burden under the provisions of the Paperwork Reduction Act (44 U.S.C. 3501 *et seq.*);
- Is certified as not having a significant economic impact on a substantial number of small entities under the Regulatory Flexibility Act (5 U.S.C. 601 *et seq.*);
- Does not contain any unfunded mandate or significantly or uniquely affect small governments, as described in the Unfunded Mandates Reform Act of 1995 (Pub. L. 104–4);
- Does not have Federalism implications as specified in Executive Order 13132 (64 FR 43255, August 10, 1999);
- Is not an economically significant regulatory action based on health or safety risks subject to Executive Order 13045 (62 FR 19885, April 23, 1997);
- Is not a significant regulatory action subject to Executive Order 13211 (66 FR 28355, May 22, 2001);
- Is not subject to requirements of Section 12(d) of the National Technology Transfer and Advancement Act of 1995 (15 U.S.C. 272 note) because application of those requirements would be inconsistent with the Clean Air Act; and
- Does not provide EPA with the discretionary authority to address, as appropriate, disproportionate human health or environmental effects, using practicable and legally permissible methods, under Executive Order 12898 (59 FR 7629, February 16, 1994).

In addition, this rule does not have tribal implications as specified by Executive Order 13175 (65 FR 67249, November 9, 2000), because the SIP is not approved to apply in Indian country located in the state, and EPA notes that it will not impose substantial direct costs on tribal governments or preempt tribal law.

List of Subjects in 40 CFR Part 52

Environmental protection, Air pollution control, Incorporation by reference, Intergovernmental relations, Nitrogen dioxide, Particulate matter, Reporting and recordkeeping requirements, Sulfur oxides.

Dated: June 17, 2014.

Susan Hedman,

Regional Administrator, Region 5.

[FR Doc. 2014–15284 Filed 6–27–14; 8:45 am]

BILLING CODE 6560–50–P

ENVIRONMENTAL PROTECTION AGENCY

40 CFR Parts 52 and 81

[EPA–R05–OAR–2012–0989; FRL–9912–88-Region 5]

Approval and Promulgation of Implementation Plans and Designation of Areas for Air Quality Planning Purposes; Indiana; Redesignation of Lake and Porter Counties to Attainment of the 2008 Eight-Hour Ozone Standard

AGENCY: Environmental Protection Agency (EPA).

ACTION: Proposed rule.

SUMMARY: The Environmental Protection Agency (EPA) proposes to disapprove a December 5, 2012, request from the state of Indiana to redesignate Lake and Porter Counties to attainment of the 2008 eight-hour ozone National Ambient Air Quality Standard (NAAQS or standard) because Indiana has not demonstrated that the Chicago-Naperville, Illinois-Indiana-Wisconsin (IL–IN–WI) ozone nonattainment area (Chicago nonattainment area), which includes Lake and Porter Counties, has attained this NAAQS. EPA proposes to take no action on Indiana's ozone maintenance plan and Motor Vehicle Emission Budgets (MVEBs), submitted with Indiana's ozone redesignation request, since approval of these State Implementation Plan (SIP) components is contingent on the attainment of the ozone standard.

DATES: Comments must be received on or before July 30, 2014.

ADDRESSES: Submit your comments, identified by Docket ID No. EPA–RO5–OAR–2012–0989, by one of the following methods:

- *http://www.regulations.gov:* Follow the on-line instructions for submitting comments.
- *Email: Mooney.John@epa.gov.*
- *Fax:* (312) 692–2551.
- *Mail:* John Mooney, Chief, Air Programs Branch (AR–18J), U.S. Environmental Protection Agency, 77 West Jackson Boulevard, Chicago, Illinois 60604.
- *Hand Delivery:* John Mooney, Air Programs Branch, (AR–18J), U.S. Environmental Protection Agency, 77 West Jackson Boulevard, 18th Floor, Chicago, Illinois 60604. Such deliveries are only accepted during the Regional Office's normal hours of operation, and special arrangements should be made for deliveries of boxed information. The Regional Office official hours of business are Monday through Friday, 8:30 a.m. to 4:30 p.m., excluding Federal holidays.

Instructions: Direct your comments to Docket ID No. EPA–R05–OAR–2012–0989. EPA's policy is that all comments received will be included in the public docket without change and may be made available online at *www.regulations.gov,* including any personal information provided, unless the comment includes information claimed to be Confidential Business Information (CBI) or other information whose disclosure is restricted by statute. Do not submit information that you consider to be CBI or otherwise protected through *www.regulations.gov* or email. The *www.regulations.gov* Web site is an ''anonymous access'' system, which means EPA will not know your identity or contact information unless you provide it in the body of your comment. If you send an email comment directly to EPA without going through *www.regulations.gov,* your email address will be automatically captured and included as part of the comment that is placed in the public docket and made available on the Internet. If you submit an electronic comment, EPA recommends that you include your name and other contact information in the body of your comment and with any disk or CD–ROM you submit. If EPA cannot read your comment due to technical difficulties and cannot contact you for clarification, EPA may not be able to consider your comment. Electronic files should avoid the use of special characters, any form of encryption, and be free of any defects and viruses. For additional instructions on submitting comments, go to section I of the **SUPPLEMENTARY INFORMATION** section of this document.

Docket: All documents in the docket are listed in the *www.regulations.gov* index. Although listed in the index, some information is not publicly available, e.g., CBI or other information whose disclosure is restricted by statute.

Certain other material, such as copyrighted material, will be publicly available only in hard copy. Publicly available docket materials are available either electronically in *www.regulations.gov* or in hard copy at the U.S. Environmental Protection Agency, Region 5, Air and Radiation Division, 77 West Jackson Boulevard, Chicago, Illinois 60604. This facility is open from 8:30 a.m. to 4:30 p.m., Monday through Friday, excluding Federal holidays. We recommend that you telephone Edward Doty at (312) 886–6057 before visiting the Region 5 office.

FOR FURTHER INFORMATION CONTACT:

Edward Doty, Environmental Scientist, Attainment Planning and Maintenance Section, Air Programs Branch (AR–18J), Environmental Protection Agency, Region 5, 77 West Jackson Boulevard, Chicago, Illinois 60604, (312) 886–6057, or *Doty.Edward@epa.gov*.

SUPPLEMENTARY INFORMATION:

Throughout this document whenever ''we,'' ''us,'' or ''our'' is used, we mean EPA. This supplementary information section is arranged as follows:

I. What should I consider as I prepare my comments for EPA?
II. What actions is EPA proposing?
III. What is the background for these actions?
IV. What are the criteria for redesignation to attainment?
V. What is EPA's analysis of the State's request?
VI. Statutory and Executive Order Reviews

I. What should I consider as I prepare my comments for EPA?

When submitting comments, remember to:

1. Identify the rulemaking by docket number and other identifying information (subject heading, **Federal Register** date and page number).

2. Follow directions—EPA may ask you to respond to specific questions or to organize comments by referencing a Code of Federal Regulations (CFR) part or section number.

3. Explain why you agree or disagree; suggest alternatives and substitute language for your requested changes.

4. Describe any assumptions and provide any technical information and/or data you used.

5. If you estimate potential costs or burdens, explain how you arrived at your estimate in sufficient detail to allow for it to be reproduced.

6. Provide specific examples to illustrate your concerns, and suggest alternatives.

7. Explain your views as clearly as possible, avoiding the use of profanity or personal threats.

8. Make sure to submit your comments by the comment period deadline identified in the proposed rule.

II. What actions is EPA proposing?

EPA is proposing to disapprove Indiana's December 5, 2012, ozone redesignation request for Lake and Porter Counties for the 2008 eight-hour ozone NAAQS because the Chicago nonattainment area continues to violate this standard based on the most recent three years (2011–2013) of quality assured, state-certified monitoring data for this ozone nonattainment area. Because this area continues to violate the 2008 ozone NAAQS, we cannot approve the ozone maintenance plan and MVEBs included in Indiana's December 5, 2012, submittal. We are proposing to take no action on the maintenance plan and MVEBs at this time.

III. What is the background for these actions?

EPA has determined that ground-level ozone (O_3) is detrimental to human health. On March 27, 2008 (73 FR 16436), EPA promulgated an eight-hour ozone NAAQS of 0.075 parts per million parts of air (0.075 ppm) (the 2008 eight-hour ozone NAAQS or standard). This standard is violated in an area when any monitor in the area records eight-hour ozone concentrations with a three-year average of the annual fourth-highest daily maximum eight-hour ozone concentrations that equals or exceeds 0.076 ppm.

Ground-level ozone is generally not emitted directly by sources. Rather, emitted Oxides of Nitrogen (NO_X) and Volatile Organic Compounds (VOC) react in the presence of sunlight, particularly under warm conditions, to form ground-level ozone, as a secondary pollutant, along with other secondary compounds. NO_X and VOC are ''ozone precursors.'' Reduction of peak ground-level ozone concentrations is achieved through controlling VOC and NO_X emissions.

Section 107 of the Clean Air Act (CAA) required EPA to designate as nonattainment any area that violated the 2008 eight-hour ozone standard. EPA promulgated designations and classifications for this standard for most areas on May 21, 2012 (77 FR 30088). However, in that rulemaking (77 FR 30091), EPA noted that the designation of the Chicago area was being delayed, pending review of 2011 ozone data certified by the state of Illinois in a December 7, 2011, letter. On June 11, 2012 (77 FR 34221), EPA promulgated the designation of the Chicago area as nonattainment for the 2008 eight-hour ozone standard with a classification of marginal nonattainment based on the review of 2009–2011 ozone data from Illinois and 2008–2010 data from Indiana and Wisconsin.[1] This review showed a violation of the standard at the Zion, Illinois monitoring site. The Chicago nonattainment area includes Cook, DuPage, Kane, Lake, McHenry and Will Counties, Aux Sable and Goose Lake Townships in Grundy County, and Oswego Township in Kendall County in Illinois, Lake and Porter Counties in Indiana, and the area east of and including the corridor of Interstate 94 in Kenosha County, Wisconsin.

IV. What are the criteria for redesignation to attainment?

The CAA provides the basic requirements for redesignating a nonattainment area to attainment. Specifically, section 107(d)(3)(E) of the CAA authorizes redesignation provided that: (1) The Administrator determines that the area has attained the applicable NAAQS based on current air quality data; (2) the Administrator has fully approved an applicable state implementation plan for the area under section 110(k) of the CAA; (3) the Administrator determines that the improvement in air quality is due to permanent and enforceable emission reductions resulting from implementation of the applicable SIP, Federal air pollution control regulations, and other permanent and enforceable emission reductions; (4) the Administrator has fully approved a maintenance plan for the area meeting the requirements of section 175A of the CAA; and, (5) the state has met all requirements applicable to the area under section 110 and part D of the CAA.

EPA provided guidance on redesignations in the General Preamble for the Implementation of Title I of the CAA Amendments of 1990 on April 16, 1992 (57 FR 13498), and supplemented this guidance on April 28, 1992 (57 FR 18070).

Two significant policy documents affecting the review of ozone redesignation requests are the following: (1) ''Procedures for Processing Requests to Redesignate Areas to Attainment,''

[1] The states of Indiana and Wisconsin failed to certify 2011 ozone data by a February 29, 2012, deadline imposed by the EPA in December 9, 2011, letters to state governors notifying the states of EPA's preliminary responses to state-recommended area designations for the 2008 eight-hour ozone standard. The letters to the governors of Illinois, Indiana, and Wisconsin informed these states of EPA's intention to designate the Chicago area as nonattainment based on the monitored 2009–2011 ozone standard violation at the Zion, Illinois monitoring site.

Memorandum from John Calcagni, Director, Air Quality Management Division, September 4, 1992 (the September 4, 1992 Calcagni memorandum); and, (2) ''Reasonable Further Progress, Attainment Demonstration, and Related Requirements for Ozone Nonattainment Areas Meeting the Ozone National Ambient Air Quality Standard,'' Memorandum from John S. Seitz, Director, Office of Air Quality Planning and Standards, May 10, 1995 (the May 10, 1995 Clean Data Policy memorandum). Additional guidance on processing redesignation requests is included in the following documents:

- ''Maintenance Plans for Redesignation of Ozone and Carbon Monoxide Nonattainment Areas,'' Memorandum from G.T. Helms, Chief Ozone/Carbon Monoxide Programs Branch, April 30, 1992;
- ''Contingency Measures for Ozone and Carbon Monoxide (CO) Redesignations,'' Memorandum from G.T. Helms, Chief, Ozone/Carbon Monoxide Programs Branch, June 1, 1992;
- ''State Implementation Plan (SIP) Actions Submitted in Response to Clean Air Act (Act) Deadlines,'' Memorandum from John Calcagni, Director, Air Quality Management Division, October 28, 1992;
- ''Technical Support Documents (TSDs) for Redesignation of Ozone and Carbon Monoxide (CO) Nonattainment Areas,'' Memorandum from G.T. Helms, Chief, Ozone/Carbon Monoxide Programs Branch, August 17, 1993;
- ''State Implementation Plan (SIP) Requirements for Areas Submitting Requests for Redesignation to Attainment of the Ozone and Carbon Monoxide (CO) National Ambient Air Quality Standards (NAAQS) On or After November 15, 1992,'' Memorandum from Michael H. Shapiro, Acting Assistant Administrator for Air and Radiation, September 17, 1993;
- ''Use of Actual Emissions in Maintenance Demonstrations for Ozone and CO Nonattainment Areas,'' Memorandum from D. Kent Berry, Acting Director, Air Quality Management Division, November 30, 1993; and
- ''Part D New Source Review (Part D NSR) Requirements for Areas Requesting Redesignation to Attainment,'' Memorandum from Mary D. Nichols, Assistant Administrator for Air and Radiation, October 14, 1994.

V. What is EPA's analysis of the State's request?

EPA is proposing to disapprove Indiana's ozone redesignation request for Lake and Porter Counties with a determination that the Chicago nonattainment area continues to violate the 2008 eight-hour ozone standard based on quality assured, state-certified ozone data for 2010–2013. Indiana's ozone redesignation request fails to meet the critical air quality requirement of section 107(d)(3)(E)(1) of the CAA. The basis for EPA's proposed disapproval of the redesignation request is discussed in more detail as follows.

A. Has the Chicago area attained the 2008 eight-hour ozone NAAQS?

An area may be considered to attain the 2008 eight-hour ozone NAAQS if there are no violations of the NAAQS, as determined in accordance with 40 CFR 50.10 and appendix P, based on the most recent three consecutive years of complete, quality-assured air quality monitoring data at all ozone monitoring sites in the area. To attain this standard, the average of the annual fourth-high daily maximum eight-hour averaged ozone concentrations measured and recorded at each monitoring site in the area over the most recent three-year period (the monitoring site's ozone design value) must not exceed 0.075 ppm. The data must be collected and quality-assured in accordance with 40 CFR part 58, and must be recorded in EPA's Air Quality System (AQS). The ozone monitoring data considered here meet these certification criteria. All ozone monitoring data considered here have been certified by the states of Illinois, Indiana, and Wisconsin.

As part of the December 5, 2012, ozone redesignation request, the Indiana Department of Environmental Management (IDEM) summarized the annual fourth-high daily maximum eight-hour ozone concentrations and three-year eight-hour ozone design values for the period of 2006–2011 for all ozone monitoring sites in the Chicago nonattainment area.

Since the December 5, 2012, submittal of Indiana's ozone redesignation request, 2012 and 2013 ozone data have been quality-assured and certified by the states of Illinois, Indiana, and Wisconsin and entered into AQS. These data, along with the ozone data summarized in Indiana's ozone redesignation request, must be considered in the review of Indiana's ozone redesignation request.

Table 1 summarizes the monitoring site-specific annual fourth-high daily maximum eight-hour ozone concentrations for all monitoring sites in the Chicago-Naperville, IL-IN-WI area for the period of 2006–2013. Note that the 2012 and 2013 ozone data were obtained from EPA's AQS, whereas the 2006–2011 ozone data were documented in Indiana's ozone redesignation request and are confirmed by ozone monitoring data contained in AQS.

TABLE 1—ANNUAL FOURTH-HIGH DAILY MAXIMUM EIGHT-HOUR OZONE CONCENTRATIONS FOR MONITORING SITES IN THE CHICAGO-NAPERVILLE, ILLINOIS-INDIANA-WISCONSIN OZONE NONATTAINMENT AREA

[ppm]

Site/site No.	County	2006	2007	2008	2009	2010	2011	2012	2013
Indiana:									
Gary 180890022	Lake	0.073	0.085	0.062	0.058	0.064	0.066	0.078	0.064
Hammond 180892008	Lake	0.075	0.077	0.068	0.065	0.069	0.072	0.077	0.063
Whiting 180890030	Lake	0.081	0.088	0.062	0.062	0.069	0.069	0.081	0.062
Ogden Dunes 181270024	Porter	0.070	0.084	0.069	0.067	0.067	0.068	0.081	0.069
Valparaiso 181270026	Porter	0.071	0.080	0.061	0.064	0.061	0.063	0.067	0.063
Illinois:									
Alsip 170310001	Cook	0.078	0.085	0.066	0.069	0.073	0.071	0.079	0.064
Chicago—Southwest Filtration Plant 170310032.	Cook	0.075	0.082	0.067	0.065	0.074	0.079	0.091	0.071
Chicago—Ellis Avenue 170310064	Cook	0.070	0.079	0.063	0.060	0.071	0.074	0.081	0.058
Chicago—Ohio Street 170310072	Cook	0.065	0.075	0.063	0.062	0.071	0.074	0.090	NA
Chicago—Lawndale 170310076	Cook	0.075	0.080	0.066	0.067	0.068	0.073	0.081	0.062
Chicago—Hurlbut Street 170311003	Cook	0.077	0.079	0.064	0.064	0.070	0.067	0.079	0.066
Lemont 170311601	Cook	0.070	0.085	0.071	0.067	0.073	0.069	0.081	0.064

TABLE 1—ANNUAL FOURTH-HIGH DAILY MAXIMUM EIGHT-HOUR OZONE CONCENTRATIONS FOR MONITORING SITES IN THE CHICAGO-NAPERVILLE, ILLINOIS-INDIANA-WISCONSIN OZONE NONATTAINMENT AREA—Continued

[ppm]

Site/site No.	County	2006	2007	2008	2009	2010	2011	2012	2013
Cicero 170314002	Cook	0.060	0.068	0.060	0.067	0.068	0.072	0.083	0.063
Des Plaines 170314007	Cook	0.065	0.078	0.057	0.057	0.064	0.065	0.073	0.067
Northbrook 170314201	Cook	0.068	0.076	0.065	0.069	0.072	0.076	0.087	0.069
Evanston 170317002	Cook	0.072	0.080	0.058	0.064	0.067	0.078	0.093	0.069
Lisle 170436001	DuPage	0.062	0.072	0.057	0.059	0,064	0.068	0.093	0.063
Elgin 170890005	Kane	0.062	0.075	0.061	0.068	0.069	0.070	0.075	0.064
Zion 170971007	Lake	0.068	0.080	0.069	0.075	0.078	0.076	0.093	0.072
Cary 171110001	McHenry	0.057	0.074	0.065	0.066	0.065	0.071	0.077	0.065
Braidwood 171971011	Will	0.068	0.071	0.060	0.063	0.065	0.061	0.071	0.061
Wisconsin:									
Chiwaukee Prairie 550590019	Kenosha	0.079	0.085	0.072	0.071	0.081	0.081	0.092	0.075

Table 2 gives the three-year averages of the annual fourth-high daily maximum eight-hour ozone concentrations for each monitoring site, the monitoring sites' ozone design values.

TABLE 2—THREE-YEAR AVERAGES OF THE ANNUAL FOURTH-HIGH DAILY MAXIMUM EIGHT-HOUR OZONE CONCENTRATIONS FOR MONITORING SITES IN THE CHICAGO-NAPERVILLE, ILLINOIS-INDIANA-WISCONSIN OZONE NONATTAINMENT AREA

[ppm]

Site/site No.	2006–2008	2007–2009	2008–2010	2009–2011	2010–2012	2011–2013
Indiana:						
Gary 180890022	0.073	0.068	0.061	0.062	0.069	0.069
Hammond 180892008	0.073	0.070	0.067	0.068	0.073	0.070
Whiting 180890030	0.077	0.070	0.064	0.064	0.073	0.070
Ogden Dunes 181270024	0.074	0.073	0.067	0.067	0.072	0.072
Valparaiso 181270026	0.070	0.068	0.062	0.062	0.064	0.064
Illinois:						
Alsip 170310001	0.076	0.073	0.069	0.071	0.074	0.071
Chicago—Southwest Filtration Plant 170310032	0.074	0.071	0.068	0.068	0.081	0.080
Chicago—Ellis Avenue 170310064	0.071	0.067	0.064	0.068	0.075	0.071
Chicago—Ohio Street 170310072	0.067	0.066	0.065	0.069	0.078	NA
Chicago—Lawndale 170310076	0.073	0.071	0.067	0.069	0.074	0.072
Chicago—Hurlbut Street 170311003	0.073	0.069	0.066	0.067	0.072	0.070
Lemont 170311601	0.075	0.074	0.070	0.069	0.074	0.071
Cicero 170314002	0.063	0.065	0.065	0.069	0.074	0.072
Des Plaines 170314007	0.066	0.064	0.059	0.062	0.067	0.068
Northbrook 170314201	0.069	0.070	0.068	0.072	0.078	0.077
Evanston 170317002	0.070	0.067	0.063	0.069	0.079	0.080
Lisle 170436001	0.063	0.062	0.060	0.063	0.069	0.068
Elgin 170890005	0.066	0.068	0.066	0.069	0.071	0.069
Zion 170971007	0.072	0.075	0.074	0.076	0.082	0.080
Cary 171110001	0.065	0.068	0.065	0.067	0.071	0.071
Braidwood 171971011	0.066	0.064	0.063	0.063	0.066	0.064
Wisconsin:						
Chiwaukee Prairie 550590019	0.078	0.076	0.074	0.077	0.085	0.082

As can be seen from table 2, the 2008 eight-hour ozone standard is currently violated at the following sites in the Chicago area: (1) Chicago-Southwest Filtration Plant; (2) Northbrook; (3) Evanston; (4) Zion; and (5) Chiwaukee Prairie. In addition, the most recent three-years of quality assured, state certified ozone data (2010–2012) available for the Chicago-Ohio Street monitoring site show a violation of the 2008 ozone standard (the 2013 ozone data for this monitoring site are incomplete and not available to assess the attainment of the ozone standard). This shows that the Chicago nonattainment area has not attained the 2008 eight-hour ozone standard.

IDEM based the state's ozone redesignation request on the lack of ozone standard violations in Lake and Porter Counties. IDEM, however, has failed to demonstrate that the 2008 eight-hour ozone standard has been attained throughout the Chicago nonattainment area. The quality-assured and state certified ozone data for 2011–2013 show a violation of the 2008 eight-hour ozone standard in the Chicago nonattainment area. Preliminary 2014 ozone data also indicate that multiple monitors in the Chicago nonattainment area continue to violate the 2008 ozone standard for the period of 2012–2014. Therefore, Indiana's ozone redesignation request fails to meet the first, and most important, criterion for the approval of ozone redesignation requests: attainment of the 2008 eight-hour ozone standard throughout the entire nonattainment area.

B. Has Indiana submitted an approvable ozone maintenance plan and approvable motor vehicle emission budget?

To be approvable, an ozone maintenance plan, in part, must demonstrate that the ozone standard will be maintained in the ozone nonattainment area for at least 10 years after EPA approves the state's ozone redesignation request. A critical component of ozone maintenance plans is an ozone attainment emissions inventory documenting the VOC and NO_X emissions inventory for the period in which the area has attained the ozone standard. The ozone maintenance demonstration usually involves the demonstration that future (during the 10 years after redesignation) VOC and NO_X emissions will be at or below the attainment emissions. Indiana's ozone redesignation request contains such an ozone maintenance demonstration.

Since the Chicago ozone nonattainment area continues to violate the 2008 eight-hour ozone standard, we cannot conclude that Indiana has developed an acceptable attainment year emissions inventory. This means that the ozone maintenance demonstration portion of the ozone maintenance plan is unacceptable.

Since the estimation of the VOC and NO_X MVEBs depends on the determination of mobile source emissions that, along with other emissions in the nonattainment area, provide for attainment of the ozone standard, and since the Chicago nonattainment area continues to violate the 2008 eight-hour ozone standard, we conclude that Indiana's estimates of the VOC and NO_X MVEBs are also not acceptable.

We are not proposing action on Indiana's ozone maintenance demonstration and plan and MVEBs at this time. However, we note that, if we were to propose actions on these ozone redesignation request elements, we would find it necessary to propose disapproval.

VI. Statutory and Executive Order Reviews

Executive Order 12866: Regulatory Planning and Review

Under Executive Order 12866 (58 FR 51735, October 4, 1993), this action is not a ''significant regulatory action'' and, therefore, is not subject to review by the Office of Management and Budget.

Paperwork Reduction Act

This rule does not impose an information collection burden under the provisions of the Paperwork Reduction Act of 1995 (44 U.S.C. 3501 *et seq.*).

Regulatory Flexibility Act

This action merely disapproves state law as not meeting Federal requirements and imposes no additional requirements beyond those imposed by state law. Accordingly, the Administrator certifies that this rule will not have a significant economic impact on a substantial number of small entities under the Regulatory Flexibility Act (5 U.S.C. 601 *et seq.*).

Unfunded Mandates Reform Act

Because this rule disapproves pre-existing requirements under state law and does not impose any additional enforceable duty beyond that required by state law, it does not contain any unfunded mandate or significantly or uniquely affect small governments, as described in the Unfunded Mandate Reform Act of 1995 (Pub. L. 104–4).

Executive Order 13132: Federalism

This action also does not have Federalism implications because it does not have substantial direct effects on the states, on the relationship between the national government and the states, or on the distribution of power and responsibilities among the various levels of government, as specified in Executive Order 13132 (64 FR 43255, August 10, 1999). This action merely disapproves a state rule, and does not alter the relationship or the distribution of power and responsibilities established in the CAA.

Executive Order 13175: Consultation and Coordination With Indian Tribal Governments

This rule also does not have tribal implications because it will not have a substantial direct effect on one or more Indian tribes, on the relationship between the Federal Government and Indian tribes, or on the distribution of power and responsibilities between the Federal Government and Indian tribes, as specified by Executive Order 13175 (59 FR 22951, November 9, 2000).

Executive Order 13045: Protection of Children From Environmental Health and Safety Risks

This rule also is not subject to Executive Order 13045 ''Protection of Children from Environmental Health Risks and Safety Risks'' (62 FR 19885, April 23, 1997), because it disapproves a state rule.

Executive Order 13211: Actions That Significantly Affect Energy Supply, Distribution, Or Use

Because it is not a ''significant regulatory action under Executive Order 12866 or a ''significant energy action,'' this action is also not subject to Executive Order 13211, ''Actions Concerning Regulations That Significantly Affect Energy Supply, Distribution, or Use'' (66 FR 28355, May 22, 2001).

National Technology Transfer Advancement Act

In reviewing state submissions, EPA's role is to approve state choices, provided that they meet the criteria of the CAA. In this context, in the absence of a prior existing requirement for the state to use voluntary consensus standards (VCS), EPA has no authority to disapprove a state submission for failure to use VCS. It would thus be inconsistent with applicable law for EPA, when it reviews a state submission, to use VCS in place of a state submission that otherwise satisfies the provisions of the CAA. Thus, the requirements of section 12(d) of the National Technology Transfer and Advancement Act of 1995 (15 U.S.C. 272 note) do not apply.

List of Subjects

40 CFR Part 52

Environmental protection, Air pollution control, Intergovernmental relations, Nitrogen dioxide, Ozone, Volatile organic compounds.

40 CFR Part 81

Environmental protection, Air pollution control, National parks, Wilderness areas.

Dated: June 18, 2014.

Susan Hedman,

Regional Administrator, Region 5.

[FR Doc. 2014–15287 Filed 6–27–14; 8:45 am]

BILLING CODE 6560–50–P

ENVIRONMENTAL PROTECTION AGENCY

40 CFR Part 300

[EPA–HQ–SFUND–1989–0007; FRL–9912–80–Region 5]

National Oil and Hazardous Substances Pollution Contingency Plan; National Priorities List: Partial Deletion of the Naval Industrial Reserve Ordnance Plant (NIROP) Superfund Site

AGENCY: Environmental Protection Agency (EPA).

ACTION: Proposed rule; notice of intent.

SUMMARY: EPA Region 5 is issuing a Notice of Intent to Delete Operable Unit 2 (OU2) of the Naval Industrial Reserve Ordnance Plant (NIROP) Superfund Site (Site), located in Fridley, Minnesota, from the National Priorities List (NPL) and requests public comments on this proposed action. The NPL, promulgated pursuant to section 105 of the Comprehensive Environmental Response, Compensation, and Liability Act (CERCLA) of 1980, as amended, is an appendix of the National Oil and Hazardous Substances Pollution Contingency Plan (NCP). EPA with the concurrence of the State of Minnesota, through the Minnesota Pollution Control Agency (MPCA), has determined that all appropriate response actions under CERCLA at the OU, identified herein, other than operation, maintenance, and five-year reviews, have been completed. However, this partial deletion does not preclude future actions under Superfund.

EPA divided the NIROP Site into three portions, known as OUs, for ease of addressing its contaminant issues. This partial deletion pertains to the OU2 portion of NIROP, which includes all the unsaturated soils within the legal boundaries of the NIROP Superfund Site exclusive of unsaturated soils underlying the former Plating Shop Area (see Site Map in the SEMS ID 446572 document listed in the Deletion Docket for OU2). The following areas will remain on the NPL and are not being considered for deletion as part of this action: OU1 and OU3. OU1 includes the contaminated groundwater within and originating from the NIROP Superfund Site. OU3 includes all the unsaturated soils underlying the former Plating Shop Area.

DATES: Comments must be received by July 30, 2014.

ADDRESSES: Submit your comments, identified by Docket ID no. EPA–HQ–SFUND–1989–0007, by one of the following methods:

- *http://www.regulations.gov:* Follow online instructions for submitting comments.
- *Email:* Sheila Desai, Remedial Project Manager, at *desai.sheila@epa.gov* or Theresa Jones, Community Involvement Coordinator, at *jones.theresa@epa.gov.*
- *Fax:* Gladys Beard at (312) 697–2077.
- *Mail:* Sheila Desai, Remedial Project Manager, U.S. Environmental Protection Agency (SR–6J), 77 West Jackson Boulevard, Chicago, IL 60604, (312) 353–4150 or Teresa Jones, Community Involvement Coordinator, U.S. Environmental Protection Agency (SI–7J), 77 West Jackson Boulevard, Chicago, IL 60604, (312) 886–0725 or toll free at 1–(800) 621–8431.
- *Hand delivery:* Teresa Jones, Community Involvement Coordinator, U.S. Environmental Protection Agency (SI–7J), 77 West Jackson Boulevard, Chicago, IL 60604. Such deliveries are only accepted during the docket's normal hours of operation, and special arrangements should be made for deliveries of boxed information. The normal business hours are Monday through Friday, 8:30 a.m. to 4:30 p.m. CST, excluding federal holidays.

Instructions: Direct your comments to Docket ID no. EPA–HQ–SFUND–1989–0007. EPA's policy is that all comments received will be included in the public docket without change and may be made available online at *http://www.regulations.gov,* including any personal information provided, unless the comment includes information claimed to be Confidential Business Information (CBI) or other information whose disclosure is restricted by statute. Do not submit information that you consider to be CBI or otherwise protected through *http://www.regulations.gov* or email. The *http://www.regulations.gov* Web site is an ''anonymous access'' system, which means EPA will not know your identity or contact information unless you provide it in the body of your comment. If you send an email comment directly to EPA without going through *http://www.regulations.gov,* your email address will be automatically captured and included as part of the comment that is placed in the public docket and made available on the Internet. If you submit an electronic comment, EPA recommends that you include your name and other contact information in the body of your comment and with any disk or CD–ROM you submit. If EPA cannot read your comment due to technical difficulties and cannot contact you for clarification, EPA may not be able to consider your comment. Electronic files should avoid the use of special characters, any form of encryption, and be free of any defects or viruses.

Docket: All documents in the docket are listed in the *http://www.regulations.gov* index. Although listed in the index, some information is not publicly available, e.g., CBI or other information whose disclosure is restricted by statute. Certain other material, such as copyrighted material, will be publicly available only in the hard copy. Publicly available docket materials are available either electronically at *http://www.regulations.gov* or in hard copy at:

- U.S. Environmental Protection Agency Region 5, 77 West Jackson Boulevard, Chicago, IL 60604, Phone: (312) 353–1063, Hours: Monday through Friday, 8:30 a.m. to 4:30 p.m. CST, excluding federal holidays.
- The Navy has set up an online repository for the NIROP Superfund Site at the link below. Please click on the Administrative Record File link to see all the documents. *http://go.usa.gov/DyNY*
- The Minnesota Pollution Control Agency also has an information repository for the NIROP Superfund Site at their offices: 520 Lafayette Road, St. Paul, MN 55155. Call 651–296–6300 or toll-free at 800–657–3864 to schedule an appointment.

FOR FURTHER INFORMATION CONTACT: Sheila Desai, Remedial Project Manager, Environmental Protection Agency (SR–6J), 77 West Jackson Boulevard, Chicago, IL 60604, (312) 353–4150, *desai.sheila@epa.gov.*

SUPPLEMENTARY INFORMATION: In the ''Rules and Regulations'' section of today's **Federal Register**, we are publishing a direct final Notice of Partial Deletion for OU2 of the NIROP Superfund Site without prior Notice of Intent for Partial Deletion because EPA views this as a noncontroversial revision and anticipates no adverse comment. We have explained our reasons for this deletion in the preamble to the direct final Notice of Partial Deletion, and those reasons are incorporated herein. If we receive no adverse comment(s) on this partial deletion action, we will not take further action on this Notice of Intent for Partial Deletion. If we receive adverse comment(s), we will withdraw the direct final Notice of Partial Deletion, and it will not take effect. We will, as appropriate, address all public comments in a subsequent final Notice of Partial Deletion based on this Notice of Intent for Partial Deletion. We will not institute a second comment period on this Notice of Intent for Partial Deletion. Any parties interested in commenting must do so at this time.

For additional information, see the direct final Notice of Partial Deletion which is located in the ''Rules and Regulations'' section of this **Federal Register**.

List of Subjects in 40 CFR Part 300

Environmental protection, Air pollution control, Chemicals, Hazardous waste, Hazardous substances, Intergovernmental relations, Penalties, Reporting and recordkeeping

requirements, Superfund, Water pollution control, Water supply.

Authority: 33 U.S.C. 1321(c)(2); 42 U.S.C. 9601–9657; E.O. 12777, 56 FR 54757, 3 CFR, 1991 Comp., p. 351; E.O. 12580, 52 FR 2923; 3 CFR, 1987 Comp., p. 193.

Dated: June 10, 2014.

Susan Hedman,

Regional Administrator, Region 5.

[FR Doc. 2014–15256 Filed 6–27–14; 8:45 am]

BILLING CODE 6560–50–P

DEPARTMENT OF THE INTERIOR

Fish and Wildlife Service

50 CFR Part 17

[Docket No. FWS–R5–ES–2011–0024; 4500030113]

RIN 1018–AY98

Endangered and Threatened Wildlife and Plants; 6-Month Extension of Final Determination on the Proposed Endangered Status for the Northern Long-Eared Bat

AGENCY: Fish and Wildlife Service, Interior.

ACTION: Proposed rule; reopening of the comment period.

SUMMARY: We, the U.S. Fish and Wildlife Service (Service), announce a 6-month extension of the final determination of whether to list the northern long-eared bat (*Myotis septentrionalis*) as endangered. We also reopen the comment period on the proposed rule to list the species. We are taking this action based on substantial disagreement regarding the sufficiency or accuracy of the available data relevant to our determination regarding the proposed listing, making it necessary to solicit additional information by reopening the comment period for 60 days. Comments previously submitted need not be resubmitted as they are already incorporated into the public record and will be fully considered in the final rule. We will publish a listing determination on or before April 2, 2015.

DATES: The comment period end date is August 29, 2014. If you comment using the Federal eRulemaking Portal (see **ADDRESSES**), you must submit your comments by 11:59 p.m. Eastern Time on the closing date.

ADDRESSES: You may submit comments by one of the following methods:

(1) *Electronically:* Go to the Federal eRulemaking Portal: *http://www.regulations.gov*. In the Search box, enter Docket No. FWS–R5–ES–2011–0024, which is the docket number for this rulemaking. Then, in the Search panel on the left side of the screen, under the Document Type heading, click on the Proposed Rules link to locate this document. You may submit a comment by clicking on ''Comment Now!'' If your comments will fit in the provided comment box, please use this feature of *http://www.regulations.gov,* as it is most compatible with our comment review procedures. If you attach your comments as a separate document, our preferred file format is Microsoft Word. If you attach multiple comments (such as form letters), our preferred format is a spreadsheet in Microsoft Excel.

(2) *By hard copy:* Submit by U.S. mail to: Public Comments Processing, Attn: FWS–R5–ES–2011–0024; Division of Policy and Directives Management; U.S. Fish and Wildlife Service; 4401 N. Fairfax Drive, MS 2042–PDM; Arlington, VA 22203.

We request that you send comments **only** by the methods described above. We will post all information received on *http://www.regulations.gov*. This generally means that we will post any personal information you provide us (see the **Information Requested** section, below, for more details).

FOR FURTHER INFORMATION CONTACT: Lisa Mandell, Deputy Field Supervisor, U.S. Fish and Wildlife Service, Twin Cities Ecological Services Office, 4101 American Blvd. East, Bloomington, MN 55425; telephone (612) 725–3548, ext. 2201; or facsimile (612) 725–3609. If you use a telecommunications device for the deaf (TDD), please call the Federal Information Relay Service (FIRS) at 800–877–8339.

SUPPLEMENTARY INFORMATION:

Background

On October 2, 2013, we published a proposed rule to list the northern long-eared bat as an endangered species (78 FR 61046) under the Endangered Species Act of 1973, as amended (Act; 16 U.S.C. 1531 *et seq.*). That proposal had a 60-day comment period, ending December 2, 2013. On December 2, 2013, we extended the proposal's comment period for an additional 30 days, ending January 2, 2014 (78 FR 72058). For a description of previous Federal actions concerning the northern long-eared bat, please refer to the October 2, 2013, proposed listing rule. We also solicited and received independent scientific review of the information contained in the proposed rule from peer reviewers with expertise in the northern long-eared bat or similar species biology, in accordance with our July 1, 1994, peer review policy (59 FR 34270).

Section 4(b)(6) of the Act and its implementing regulations at 50 CFR 424.17(a) require that we take one of three actions within 1 year of a proposed listing and concurrent proposed designation of critical habitat: (1) Finalize the proposed rule; (2) withdraw the proposed rule; or (3) extend the final determination by not more than 6 months, if there is substantial disagreement regarding the sufficiency or accuracy of the available data relevant to the determination.

Since the publication of the October 2, 2013, proposed listing rule, there has been substantial disagreement regarding the best available science as it relates to the northern long-eared bat's current and predicted population trends and threats. Differing interpretations of the accuracy and sufficiency of the existing information on white-nose syndrome, which has been identified as the primary threat to the species, have led to disagreement regarding the current status of the species. In particular, some commenters raised questions regarding the certainty of scientific information used in the proposed listing rule. For example, some raised questions about: The probability and likely rate of white-nose syndrome spreading to currently unaffected areas; how or whether the disease will impact the northern long-eared bat in currently unaffected or recently affected areas within its range; or how existing scientific models predict such factors. Some commenters stated that some portions of the species' range where white-nose syndrome has been present in hibernacula for several years have yet to see declines in the species' numbers similar to what was observed in the Northeast.

There is substantial scientific uncertainty and disagreement about the Service's analysis or interpretation of the data, specifically in how and to what extent white-nose syndrome will spread and affect the northern-long eared bat across its range, which has a bearing on our listing determination. As a result of these comments, we find that there is substantial disagreement regarding the sufficiency or accuracy of the available data relevant to our listing determination. Therefore, in consideration of these disagreements, we have determined that a 6-month extension of the final determination for this rulemaking is necessary, and we are hereby extending the final determination for 6 months in order to solicit and consider information that will help to clarify these issues and to fully analyze information regarding available data that are relevant to our

final listing determination. With this 6-month extension, we will make a final determination on the proposed rule no later than April 2, 2015.

Information Requested

We will accept written comments and information during this reopened comment period on our proposed listing for the northern long-eared bat that was published in the **Federal Register** on October 2, 2013 (78 FR 61046). We will consider information and recommendations from all interested parties. We intend that any final action resulting from the proposal be as accurate as possible and based on the best available scientific and commercial data.

In consideration of the scientific disagreements about the data used to support the proposed rulemaking, we are particularly interested in new information and comment regarding:

(1) Whether we have appropriately interpreted the scientific studies cited in the proposed rule, and whether there is additional scientific information not considered in the proposal.

(2) Northern long-eared bat population trends in each State or rangewide.

(3) Information pertaining to white-nose syndrome, specifically:

(a) The predicted probability that white-nose syndrome will spread to currently unaffected areas;

(b) The predicted rate of white-nose syndrome spreading to currently unaffected areas;

(c) The magnitude of impacts specifically to the northern long-eared bat from white-nose syndrome, both in affected and currently unaffected areas; and

(d) The timeframe of response to white-nose syndrome in recently affected or currently unaffected areas.

(4) Conservation efforts for the northern long-eared bat that are planned or currently being implemented that were not already stated in comments submitted during the previous comment period.

If you previously submitted comments or information on the proposed rule, please do not resubmit them. We have incorporated previously submitted comments into the public record, and we will fully consider them in the preparation of our final determination. Our final determination concerning the proposed listing will take into consideration all written comments and any additional information we receive.

You may submit your comments and materials concerning the proposed rule by one of the methods listed in the **ADDRESSES** section above. We request that you send comments only by the methods described in the **ADDRESSES** section.

If you submit information via *http://www.regulations.gov,* your entire submission—including any personal identifying information—will be posted on the Web site. If your submission is made via a hardcopy that includes personal identifying information, you may request at the top of your document that we withhold this information from public review. However, we cannot guarantee that we will be able to do so. We will post all hardcopy submissions on *http://www.regulations.gov*.

Comments and materials we receive, as well as supporting documentation we used in preparing the proposed rule, will be available for public inspection on *http://www.regulations.gov,* or by appointment, during normal business hours, at the U.S. Fish and Wildlife Service, Twin Cities Ecological Services Office (see **FOR FURTHER INFORMATION CONTACT**). You may obtain copies of the proposed rule on the Internet at *http://www.regulations.gov* at Docket No. FWS–R5–ES–2011–0024. Copies of the proposed rule are also available at *http://www.fws.gov/midwest/Endangered/mammals/nlba/index.html*.

Authority

The authority for this action is the Endangered Species Act of 1973, as amended (16 U.S.C. 1531 *et seq.*).

Dated: June 19, 2014.

Stephen Guertin,

Acting Director, U.S. Fish and Wildlife Service.

[FR Doc. 2014–15213 Filed 6–27–14; 8:45 am]

BILLING CODE 4310–55–P

DEPARTMENT OF COMMERCE

National Oceanic and Atmospheric Administration

50 CFR Part 253

[Docket No. 140401299–4443–01]

RIN 0648–BE15

Fisheries Financing Program; Construction of New Replacement Fishing Vessels

AGENCY: National Marine Fisheries Service (NMFS), National Oceanic and Atmospheric Administration (NOAA), Commerce.

ACTION: Advance notice of proposed rulemaking; request for comments.

SUMMARY: NMFS issues this advance notice of proposed rulemaking (ANPR) to provide background information and request public comment on potential amendments to the regulations governing the Fisheries Financing Program (FFP) that address several specific issues currently affecting fishers and fishing companies, and to identify specific measures that might address these issues. NMFS is requesting public comment regarding the potential implementation of changes to the current prohibitions against using the FFP to finance the cost of new vessel construction and a vessel refurbishing project that materially increases an existing vessel's harvesting capacity.

DATES: Written comments regarding the issues in this ANPR must be received on or before July 30, 2014.

ADDRESSES: You may submit comments, identified by NOAA–NMFS–2014–0062, by any one of the following methods:

- *Electronic submission:* Submit all electronic public comments via the Federal e-Rulemaking Portal: Go to *www.regulations.gov#!docketDetail;D=NOAA-NMFS-2014-0062,* click the ''Comment Now!'' icon, complete the required fields, and enter or attach your comments.
- *Mail:* Submit written comments to NMFS MB5, 1315 East-West Highway, Silver Spring, MD 20910.

Instructions: Comments sent by any other method, to any other address or individual, or received after the end of the comment period, may not be considered by NMFS. All comments received are a part of the public record and will generally be posted for public viewing on *www.regulations.gov* without change. All personal identifying information (for example, name, address, etc.) voluntarily submitted by the commenter may be publicly accessible. Do not submit confidential business information or otherwise sensitive or protected information.

NMFS will accept anonymous comments (enter ''N/A'' in the required fields if you wish to remain anonymous). Attachments to electronic comments will be accepted in Microsoft Word, Excel, or Adobe PDF file formats only. Related documents, including the FFP regulations, are available upon request at the mailing address noted above or on the Financial Services Division's Web page at: *http://www.nmfs.noaa.gov/MB/financial_services/*.

FOR FURTHER INFORMATION CONTACT: Paul Marx or Earl Bennett at 301–427–8724.

SUPPLEMENTARY INFORMATION: The FFP was originally created as the Fishing Vessel Mortgage and Loan Insurance program in 1971. It was renamed the Fishing Vessel Obligation Guarantee in

1973. In 1998 it became the FFP. While originally created as a Federal Guarantee program that guaranteed loans made by the private sector, the program ultimately became a direct lending program. The FFP does not require appropriated funds because it has a negative subsidy under the Federal Credit Reform Act (FCRA) of 1991. It operates on the basis of credit authority, provided by the Congress in annual appropriations, which authorizes the program to borrow from the U.S. Treasury. Unused lending authority cannot be obligated after the end of each fiscal year, so the lending authority must be authorized each year. The FFP regulations do not allow financing the cost of new vessel construction or a vessel refurbishing project that materially increases an existing vessel's harvesting capacity. Additionally, for several years, prior to FY14 (see comments below), appropriations language has prohibited the use of FFP loan authority for any project that increases the capacity in any U.S. fisheries.

I. Background

The FFP is a direct government loan program that receives annual loan authority from Congress to provide long-term loans to the aquaculture, mariculture, and commercial fisheries industries. These loans involve a wide variety of fisheries activities, including fishing, fish processing, purchases of fishing quota, and aquaculture facilities. Borrowers may be single proprietors, private corporations and limited partnerships, or public corporations. The program can finance up to 80 percent of the cost of an eligible project.

General Program Requirements

In order to be eligible for this program:

1. Borrower must be a U.S. citizen, or an entity who is a citizen for the purpose of documenting a vessel in the coastwise trade under 46 U.S.C. 50501,
2. Borrower must have a good credit and earnings record, net worth, and liquidity in support of the project,
3. Lending must be fully secured with borrower's assets, which may include personal guarantees and additional collateral not directly associated with the project,
4. Borrower must generally have the ability, experience, resources, character, reputation, and other qualifications necessary for successfully operating, utilizing, or carrying out the project.

Loan Terms

The FFP makes long term, fixed rate loans with interest rates of two percent over the U.S. Department of the Treasury's cost of funds. Loan maturities may be up to 25 years, but may not exceed the economic useful life of a project. Loans have no prepayment penalties. All loans are secured by a promissory note, capital assets, and security agreement.

Applicants must pay a fee of 0.5% of the amount applied for with the application for a new loan. Half of this is the filing fee, which is nonrefundable.

Need for Action

The FFP has operated under regulations stating that loans will not be made for the cost of new vessel construction or vessel refurbishing that materially increases an existing vessel's harvesting capacity. Vessel owners have indicated that a significant portion of the existing fleet of U.S. fishing vessels consists of older vessels which are not optimal in terms of safety, efficiency, and environmental and fuel-efficient operation. The country needs to maintain the economic benefits of having a commercial fishing industry. This industry is a large employer, produces significant exports, and feeds people. The economic benefits trickle down to many segments of the national economy, including but not limited to the insurance, fuel, and vessel supply and equipment sectors. In many communities, the fishing industry is an essential element in their survival. This action will also generate employment by supporting projects in U.S. shipyards. Renewal of our aging fishing fleet would improve both safety and fuel efficiency and assist in maintaining the economic benefits derived from the commercial fishing industry.

Fiscal Year 2014 Appropriations increased FFP's traditional loan authority from $59 million to $100 million and removed the language prohibiting its use for new vessel projects that increase capacity. Meeting this new program initiative will require changes to the existing FFP regulations at 50 CFR part 253. Specifically, the regulations will need to be changed to allow the direct loan program to finance the construction of new fishing vessels and projects that increase an existing vessel's capacity under specific circumstances. The regulations would also specify the manner in which these types of loans will be managed, including project review, qualification and collateral requirements, and related provisions.

In this ANPR, NMFS requests comments and input on the proposed program changes, and the provisions that need to be in place to implement those changes. Specifically, NMFS seeks to answer the following programmatic questions. Can fishing fleets be replaced or modernized without causing overfishing? Does it require that recapitalization occur only in limited access or quota share fisheries? If, implemented, are the suggested lending standards and requirements adequate?

II. Potential Program Solutions

NMFS generally does not want to finance the cost of new fishing vessels or reconstruction of existing vessels that materially increase harvesting. NMFS believes it can entertain financing these costs only for vessels participating in limited access fisheries. Where catch limits control the annual harvest, replacement or improvement of vessels does not increase the total catch. The FFP currently does not make vessel loans in any fisheries that are listed as overfished or subject to overfishing.

1. Questions Associated With Considering these Changes

a. How and where to implement new vessel construction lending and remain harvesting neutral?

b. How to identify, approve and control the use of the replaced vessel?

c. How to control movement of new or improved vessels to other fisheries?

d. How to protect the FFP from the risks associated with vessel construction lending?

The FFP's regulation prohibits financing the cost of either new vessel construction or a vessel refurbishing project that materially increases an existing vessel's harvesting capacity. NMFS believes it should enter into financing the construction of new vessels and refurbishing that increases a vessel's harvesting capacity only if such lending results in no significant increase in fish harvesting. We will make that determination on an application-by-application basis.

NMFS is considering two approaches in implementing this new authority: Either we will act upon plans submitted by Fishery Management Councils responsible for particular fisheries or we will allow vessel owners in any limited access fishery to use the FFP. Factors to be considered in this determination include:

What fisheries are appropriate for this new lending? Would it be any fishery or just limited access fisheries?

Pros: In a limited access fishery, replacing one vessel with another maintains a constant number of vessels and permits. It provides the fishers or firms with the flexibility to tailor the replacement vessel to the market conditions at the time. If it makes sense to replace an existing vessel with a

larger one, the business decision is left to the owner. The new vessel remains bound by the Total Allowable Catch in the fishery. There is no increase in harvesting.

Cons: Allowing this new lending in any fishery, without limitation, could increase the pressure on stocks not under controlled catch limits.

Where should new vessel construction be authorized—Nationwide, or in specific regions at the request of fisheries governed by specific Fishery Management Councils?

Pros: Implementing the program nationwide would remove ambiguity, allow the fisheries market to determine where and how to recapitalize, and might simplify the changes to the rule. Implementing at the request of Fishery Management Councils (FMC) would accommodate differences between regions and fisheries, and would allow the FMC to more narrowly tailor environmental analyses to regional issues and concerns.

Cons: Implementing the program nationwide might require a programmatic environmental assessment (PEA), addressing all of the fisheries of the United States. Such a PEA could take longer to complete than the time provided to use lending authority in a year. It would also require a significant increase in FFP lending authority, no matter which region was involved. One estimate of new vessel need for the North Pacific alone ranges between $2.2 and $4.4 billion. Implementing the program on the basis of Fishery Management Councils' plans could result in different rules for different fisheries—for example, some fisheries might request loans only for new replacement vessels, while others might request loans for vessel rehabilitation as well.

How to deal with the replaced vessel? In the case of new vessel construction, attention must be paid to the replaced vessel to insure a capacity and harvesting-neutral outcome. With no restrictions on the replaced vessel, it will become available for use in other U.S. fisheries or elsewhere in the world. This result could lead to, or increase, over fishing. The options are to have the vessel scrapped, have the vessel title restricted by revoking its fisheries endorsement and prohibiting foreign transfer, or have no restriction. An alternative would be to prohibit the replaced vessel's use in any U.S. fishery without the written approval of the FMC that manages that fishery. A related question is whether an FMC should be given responsibility to make such approvals. Included in considerations surrounding replacement vessels is what vessel is replaced. Can it be any fishing vessel or must it be one of similar capacity and in the identical fishery? Vessels in limited access fisheries are predominantly federally documented. Should we require that both new and replacement vessels be federally documented?

Pros: To require the replaced vessel to be scrapped would be the most straightforward solution. The business calculation would be simplified. Once the new vessel goes into operation, the replaced vessel would have a set time to be scrapped. However, some owners have expressed the wish to be able to re-sell their replaced vessel to another permit-holder in the same fishery, who would then scrap that replaced vessel. Title restriction allows the replaced vessel, which may have significant residual value, to be used in a non-fishing activity. Applicants will want to realize the greatest financial return from the replaced vessel.

Cons: Requiring vessels to be scrapped may cause owners to delay replacement of older vessels with significant residual value, which would slow the recapitalization effort and extend the use of older, less efficient vessels because of the cost involved and the potential loss of revenue from not having an alternative use. Title restriction has been an issue with State-documented vessels. Having no restriction isn't consistent with being capacity-neutral. Not requiring the vessel to be scrapped creates enforcement difficulties, as illustrated by the vessel capacity reduction programs. Under the latter programs, the U.S. Coast Guard has discovered abandoned buyback vessels docked in harbors, causing environmental and economic damage to the community. Additionally, buyback vessels have shown up in State waters, fishing in violation of the prohibition against fishing. Since they are not required to have a fisheries endorsement in State fisheries, they fish there with impunity.

What would we consider for the timing of the removal? We see two options. Option one is to require the removal restriction prior to funding the loan. Option two would require the removal restriction within four months of the new vessel being put in service.

Pros: Removal of the replaced vessel prior to funding the loan makes the process straightforward. There is no risk that the loan can be used to increase the number of vessels in a fishery. Removal within four months of the new vessel entering service would provide a break-in period for the replacement vessel, thus minimizing the disruption to the owner's operations.

Cons: Removal prior to funding exposes the vessel owner to sea trials and shake-out risk—potentially having no vessel able to fish until the new vessel is fully seaworthy. Management of FFP lending risks and traditional lending:

The FFP has a negative FCRA subsidy rate. As such, no appropriation of subsidy is required to allow program lending. New vessel construction lending and major rebuilding projects pose higher credit risks and are more labor intensive than the current program. Additionally, the 2014 appropriation results in an increase to the FFP's annual loan authority without allocation of this authority. We need to continue to have loans available for the FFP's historical uses. The projected size of the proposed new loans could quickly consume a year's loan authority without providing any loans for historical FFP purposes.

How do we design the requirements and guidelines to protect the FFP's negative subsidy and traditional uses?

Cost overruns pose a significant risk to the FFP. Progress payments while the vessel is in construction represent liabilities in advance of the project generating any revenue. The owner must begin to make debt service payments before the vessel is completed. If the final vessel cost exceeds the original estimate, the vessel owner must make up the difference. Cost overruns are common if not normal for large shipyard projects. The FFP could be left with an unpaid loan, and an unfinished asset with negligible value—the likelihood of a significant loss exists. The way to mitigate this risk is either through a performance bond or insurance, or a reserve fund.

Pros: A performance bond/insurance (a common practice) provides a payout in the event that the vessel is delayed in the shipyard, faces materials cost increases due to market fluctuations, or its final cost increases for other reasons. A reserve fund in the amount of 25% to 50% of the estimated cost of the vessel provides the same functionality, increasing the assurance that the vessel will be completed and viable for its intended use in a fishery, even if the cost rises inordinately. Either of these mechanisms would reduce the risk to the FFP significantly.

Cons: The performance bond/insurance would raise the owner's cost somewhat. The reserve fund would raise the owner's initial cash needs substantially, requiring the aggregation of between 45% and 70% of the vessel's total cost prior to closing on the FFP loan.

2. Project Monitoring

The vessel construction in progress must be monitored to certify milestones for periodic payments and the adequacy of the work. The FFP does not have the staff, expertise or funds for this. Not having the ability to perform this function would make the credit risk unacceptable. Requiring the borrower to procure such a third party is a reasonable way for NMFS to assure itself that milestones claimed for reimbursement with loan proceeds have, in fact, been met. The applicant will engage a surveyor to perform these functions for them. We need to determine if the same surveyor can jointly represent the applicant and NMFS.

Pros: Use of a vessel surveyor to monitor construction is the standard. Ship surveyors are a skilled trade, with industry certifications and licenses. The cost of the surveyor is generally proportional to the cost of the vessel. The borrower is responsible for managing and reimbursing the surveyor's costs. NOAA/NMFS could be adequately represented if we required our approval of the surveyor with a requirement to report directly to NMFS. Use of the applicant's surveyor would be paid by the applicant, but NMFS would receive copies of the surveyor's reports to the borrower.

Cons: The borrower has already hired a project manager and other support staff, so the surveyor may add to the overall cost of the vessel. The surveyor will be reporting to the FFP, but hired by the borrower. If one surveyor is reporting to the owner and NMFS but being paid by the owner, there could be a conflict of interest.

3. Lending Allocation

The FFP's annual traditional loan authority has been $59 million for a number of years. For FY14, it's $100 million. Even assuming a continuation at the $100 million level, a few large projects for new vessels or major reconstruction ($8–$25 million or more) could use all available loan authority. The FFP wishes to ensure it can continue to help as many industry participants as possible and provide traditional lending for purposes that don't increase capacity. Should there be an allocation reserved for traditional loan purposes?

Pros: The FFP provides a variety of loans for purposes that do not increase capacity. Examples include aquaculture facilities, existing vessel purchases, vessel repairs, and fish processing facilities. Maintaining a portion of loan authority to support these vital projects is important.

Cons: Lending authority set aside for the primary program would not be available to meet potential demand for new vessels or reconstruction projects. Recapitalization could be slowed as a result.

NMFS seeks comments on these questions and recommendations, as well as any alternatives that may achieve the same goals.

IV. Conclusion

This ANPR explains the Fisheries Finance Program management history while also identifying some major potential changes to the program to support recapitalization and modernization of the fishing fleet. Some of the ideas discussed are specific changes to the current restriction on new vessel construction and reconstruction that materially increases the capacity of an existing vessel. This amendment to the FFP could be implemented through a regulatory action within the next year. The other changes discussed include operational considerations for the loan program, but they also signal an overarching policy on providing loans to support recapitalization of the fishing fleet over the long term.

Additionally, we note that all vessel construction or reconstruction projects will be required to be performed at a shipyard in the United States.

It is NMFS's goal to move forward with a viable and flexible vessel replacement and/or modernization solution that will achieve sustainable fishery goals and objectives while minimizing adverse environmental impacts. NMFS seeks public comment on the above issues and recommendations. NMFS anticipates having a relatively short time to draft, publish, and finalize a rule to implement the new authority, as well as to obligate the funds made available for the purpose, because these funds lapse at the end of the fiscal year for which they were appropriated.

V. Submission of Public Comments

The comment period for all topics discussed in this ANPR closes on July 30, 2014. Please see the **ADDRESSES** section of this ANPR for additional information regarding the submission of written comments. NMFS requests comments on the potential adjustment of the FFP program authority to allow the financing of new vessel construction to replace existing vessels in limited access fisheries.

The preceding sections provide background information regarding these topics and ideas for potential changes. The public is encouraged to submit comments related to the specific ideas and questions asked in each of the preceding sections. All written comments received by the due date will be considered in drafting proposed changes to the Fisheries Finance Program regulations. In developing any proposed regulations, NMFS must consider and analyze ecological, social, and economic impacts. Therefore, NMFS encourages comments that would contribute to the required analyses, and respond to the questions presented in this ANPR.

Classification

This rulemaking has been determined to be not significant for purposes of Executive Order 12866.

Authority: 46 U.S.C. 53701 and 16 U.S.C. 4101 *et seq.*

Dated: June 23, 2014.

Eileen Sobeck,

Assistant Administrator for Fisheries, National Marine Fisheries Service.

[FR Doc. 2014–15173 Filed 6–27–14; 8:45 am]

BILLING CODE P

DEPARTMENT OF COMMERCE

National Oceanic and Atmospheric Administration

50 CFR Part 679

[Docket No. 130424402–4509–01]

RIN 0648–BD23

Fisheries of the Exclusive Economic Zone Off Alaska; Bering Sea and Aleutian Islands Management Area; Amendment 105; Bering Sea and Aleutian Islands Flatfish Harvest Specifications Flexibility

AGENCY: National Marine Fisheries Service (NMFS), National Oceanic and Atmospheric Administration (NOAA), Commerce.

ACTION: Proposed rule; request for comments.

SUMMARY: NMFS issues a proposed rule that would implement Amendment 105 to the Fishery Management Plan for Groundfish of the Bering Sea and Aleutian Islands Management Area (BSAI FMP). If approved, Amendment 105 would establish a process for Western Alaska Community Development Quota (CDQ) groups, and cooperatives established under the Amendment 80 Program (Amendment 80 cooperatives), to exchange harvest quota from one of three flatfish species (flathead sole, rock sole, and yellowfin

sole) for an equal amount of another of these three flatfish species, while maintaining total catch below acceptable biological catch (ABC) limits. This action would modify the annual harvest specification process to allow the North Pacific Fishery Management Council (Council) to establish the maximum amount of flathead sole, rock sole, and yellowfin sole that may be exchanged based on social, economic, or biological considerations. This action is necessary to mitigate the operational variability, environmental conditions, and economic factors that may constrain the CDQ groups and Amendment 80 cooperatives from achieving, on a continuing basis, the optimum yield (OY) in the BSAI groundfish fisheries. This action is intended to promote the goals and objectives of the BSAI FMP, the Magnuson-Stevens Fishery Conservation and Management Act (Magnuson-Stevens Act), and other applicable law.

DATES: Submit comments on or before July 30, 2014.

ADDRESSES: You may submit comments, identified by, NOAA–NMFS–2013–0074, by any of the following methods:

- Electronic Submissions: Submit all electronic public comments via the Federal eRulemaking Portal. Go to *www.regulations.gov/#!docketDetail;D=NOAA-NMFS-2013-0074,* click the ''Comment Now!'' icon, complete the required fields, and enter or attach your comments.
- Mail: Submit written comments to Glenn Merrill, Assistant Regional Administrator, Sustainable Fisheries Division, Alaska Region NMFS, Attn: Ellen Sebastian. Mail comments to P.O. Box 21668, Juneau, AK 99802–1668.

Instructions: Comments sent by any other method, to any other address or individual, or received after the end of the comment period, may not be considered by NMFS. All comments received are a part of the public record and will generally be posted for public viewing on *www.regulations.gov* without change. All personal identifying information (e.g., name, address), confidential business information, or otherwise sensitive information submitted voluntarily by the sender will be publicly accessible. NMFS will accept anonymous comments (enter ''N/A'' in the required fields if you wish to remain anonymous). Attachments to electronic comments will be accepted in Microsoft Word, Excel, or Adobe PDF file formats only.

Electronic copies of the Regulatory Impact Review (RIR), Initial Regulatory Flexibility Analysis (IRFA), and the Categorical Exclusion prepared for this action, the supplemental information report prepared for the final 2014 and 2015 harvest specifications (Harvest Specifications Supplemental Information Report (SIR)), or the Alaska Groundfish Harvest Specifications Final Environmental Impact Statement (Harvest Specifications EIS) may be obtained from *http://www.regulations.gov* or from the NMFS Alaska Region Web site at *http://alaskafisheries.noaa.gov.*

Written comments regarding the burden-hour estimates or other aspects of the collection-of-information requirements contained in this action may be submitted to NMFS at the above address and by email to *OIRA_Submission@omb.eop.gov* or fax to (202) 395–7285.

FOR FURTHER INFORMATION CONTACT: Seanbob Kelly, 907–586–7228.

SUPPLEMENTARY INFORMATION:

Regulatory Authority

NMFS proposes regulations to implement Amendment 105 to the BSAI FMP. NMFS manages the U.S. groundfish fisheries of the Exclusive Economic Zone off Alaska under the BSAI FMP and the Fishery Management Plan for Groundfish of the Gulf of Alaska. The Council prepared the BSAI FMP pursuant to the Magnuson-Stevens Act and other applicable law. Regulations implementing the BSAI FMP appear at 50 CFR part 679. General regulations governing U.S. fisheries also appear at 50 CFR part 600.

Background

The proposed action would revise Federal regulations and amend the BSAI FMP to:

- Define an amount of flathead sole, rock sole, and yellowfin sole in the BSAI, that is the difference between each species' annual ABC and annual total allowable catch (TAC), as the ABC surplus for that flatfish species.
- Allow the Council to recommend, and NMFS to specify, that some, none, or all, of the ABC surplus for flathead sole, rock sole, or yellowfin sole in the BSAI be set aside each year through the annual harvest specifications process. The amount of ABC surplus set aside for a species is the ABC reserve.
- Allow CDQ groups and Amendment 80 cooperatives to apply to NMFS to receive a portion of the ABC reserve for flathead sole, rock sole, or yellowfin sole in the BSAI if they exchange a portion of their unused annual allocations of one or two flatfish species for an equal amount of another flatfish species (e.g., exchange an amount of unused annual allocation of flathead sole or allocations of flathead sole and rock sole for an equal amount of yellowfin sole ABC reserve). This exchange would be defined as a Flatfish Exchange.
- Allow a Flatfish Exchange only if it would not cause a CDQ group or an Amendment 80 cooperative to exceed the ABC or ABC reserve amount for flathead sole, rock sole, or yellowfin sole.
- Limit the number of Flatfish Exchanges that each CDQ group or Amendment 80 cooperative could undertake in a calendar year.
- Require that Amendment 80 cooperatives provide an annual report on the use of Flatfish Exchanges.

The purpose of this proposed action is to maximize catch, retention, and utilization of flathead sole, rock sole, and yellowfin sole while maintaining catch at, or below, the ABC and ABC reserve for each species. The following sections provide necessary background to describe the effects of the proposed action. These sections are: (1) The annual harvest specification process; (2) the CDQ Program; (3) the Amendment 80 Program; (4) the objectives for and effects of the proposed action; and (5) the proposed action. The proposed action section includes a description of: The process for setting the ABC surplus and the ABC reserve; the method for determining the portion of the ABC reserve for each flatfish species available to each CDQ group and Amendment 80 cooperative; the Flatfish Exchange process each CDQ group and Amendment 80 cooperative must use; and annual Amendment 80 cooperative Flatfish Exchange reporting requirements.

Annual Harvest Specification Process

General Annual Harvest Specifications Process

Section 3.2.3 of the BSAI FMP and its implementing regulations at § 679.20(c) require that the Council recommend and NMFS specify an overfishing level (OFL), an ABC, and a TAC for each stock or stock complex (i.e., species or species group) of groundfish on an annual basis. The OFLs, ABCs, and TACs for BSAI groundfish are specified through the annual harvest specification process. A detailed description of the annual harvest specification process is provided in the Harvest Specifications EIS, the Harvest Specifications SIR, and the final 2014 and 2015 harvest specifications for groundfish of the BSAI (79 FR 12108, March 04, 2014) and is briefly summarized here.

Section 3.2.1 of the BSAI FMP defines the OFL as the level above which

overfishing is occurring for a species or species group. NMFS manages fisheries in an effort to ensure that no OFLs are exceeded in any year. Section 3.2.4.3 of the BSAI FMP clarifies that if catch is approaching an OFL, NMFS will prevent overfishing by closing specific fisheries identified by gear and area that incur the greatest catch. Closures expand to other fisheries if the rate of take is not sufficiently slowed. Regulations at §§ 679.20(d)(1), (d)(2), and (d)(3) define the process NMFS uses to limit or prohibit fishing to prevent overfishing and maintain total catch at or below the OFL.

Section 3.2.1 of the BSAI FMP defines the ABC as the level of a species or species group's annual catch that accounts for the scientific uncertainty in the estimate of OFL and any other scientific uncertainty. The ABC cannot exceed the OFL as described in section 3.2.3.3.1 of the BSAI FMP. NMFS attempts to manage all fisheries so that total catch does not exceed the ABC by monitoring fisheries, imposing necessary closures, and other limitations. Regulations at §§ 679.20(d)(1) and (d)(2) describe the range of management measures that NMFS uses to maintain total catch at or below the ABC.

Section 3.2.1 of the BSAI FMP defines the TAC as the annual catch target for a species or species group, derived from the ABC by considering social and economic factors and management uncertainty. Section 3.2.3.4.1 of the BSAI FMP requires that the TAC must be set lower than or equal to the ABC. Section 3.2.4.3 of the BSAI FMP clarifies that NMFS may use a variety of management measures to limit catch to avoid exceeding the TAC. Regulations at §§ 679.20(d)(1) and (d)(2) describe the range of management measures that NMFS uses to maintain total catch at or below the TAC.

The development of the OFLs and ABCs are based on annual Stock Assessment and Fishery Evaluation (SAFE) reports compiled by the Council's BSAI Groundfish Plan Team (Plan Team) and reviewed by the Council's Scientific and Statistical Committee (SSC) and Advisory Panel (AP). The SAFE report contains a review of the latest scientific analyses and estimates of each species' biomass and other biological parameters, as well as summaries of the available information on the BSAI ecosystem and the economic condition of the groundfish fisheries off Alaska. The Plan Team publicly reviews the SAFE reports, receives input from the public, and recommends any needed revisions to the SAFE reports, estimates an OFL and ABC for each species or species group, and provides those recommendations to the Council.

Annually at the December Council meeting, the Council, the SSC, and the AP, publicly review the Plan Team's recommendations. During this meeting, the Council adopts OFLs and ABCs that cannot exceed the amounts recommended by the SSC. In setting specific TAC levels, the Council considers the best available biological and socioeconomic information, including projected biomass trends, information on assumed distribution of stock biomass, and revised technical methods used to calculate stock biomass.

Section 3.2.2.2 of the BSAI FMP and regulations at § 679.20(a)(2) require the sum of the TACs in all BSAI groundfish fisheries to be set within a range from 1.4 to 2 million metric tons (mt). This regulation implements the statutory requirement that ''[t]he optimum yield for groundfish in the Bering Sea and Aleutian Islands Management Area shall not exceed 2 million metric tons'' (See section 803(c) of Pub. L. No. 108–199). Pursuant to Section 3.2.3.4.1 of the BSAI FMP, the Council may recommend TACs that are lower than the ABCs recommended by the SSC if setting TACs equal to ABCs would cause TACs to exceed 2 million mt. NMFS adheres to the statutory provision by limiting the sum of the TACs for all BSAI groundfish to 2 million mt. Generally, the sum of the ABCs for BSAI groundfish exceeds 2 million mt. For example, in 2014 the sum of all BSAI groundfish ABCs was 2,572,819 mt (79 FR 12108, March 04, 2014). In recent years, the Council and NMFS have specified TACs for several species below their respective ABCs to ensure that the sum of the TACs for groundfish in the BSAI does not exceed 2 million mt.

In addition to public comment received and considered by the Council during the development of annual harvest specifications, NMFS provides the public with notice and an opportunity to comment when it issues a proposed rule to implement the annual harvest specifications, which covers the Council's OFL, ABC, and TAC recommendations. The Secretary of Commerce (Secretary) will approve the final rule implementing the Council's recommended OFLs, ABCs, and TACs if she finds them consistent with the FMP, MSA, and other applicable law. The final 2014 and 2015 harvest specifications provide additional detail on this process (79 FR 12108, March 04, 2014).

Annual Specification Process for Flathead Sole, Rock Sole, and Yellowfin Sole

Flatfish in the BSAI are harvested by vessels primarily using trawl gear. In this mixed species fishery, operators target certain species of flatfish but also take a variety of species incidentally, including halibut and crab (species that are prohibited for harvest by vessels fishing for groundfish), and other groundfish that typically occupy the same habitat at the same times of year. The composition of groundfish species taken in the BSAI flatfish fisheries varies by season and by fishing year.

Three of the most valuable BSAI flatfish fisheries, and the focus of this proposed action, are flathead sole, rock sole (*Lepidopsetta polyxystra*), and yellowfin sole (*Limanda aspera*). In the BSAI, flathead sole represents two morphologically similar species managed by NMFS as single species group. The flathead sole referred to in this document, and targeted in BSAI flatfish fisheries, is comprised of flathead sole (*Hippoglossoides elassodon*) and Bering flounder (*Hippoglossoides robustus*); the harvest of both species accrues toward a flathead sole TAC.

Typically the Council has recommended, and NMFS has approved, setting flathead sole, rock sole, and yellowfin sole TACs below the ABCs for those species for a variety of factors summarized here and described in greater detail in Sections 1.5 and 1.6 of the RIR/IRFA prepared for this action. In the Bering Sea, pollock is the target of a highly valued fishery; therefore, the Council often recommends, and NMFS approves, a TAC that is at, or near, the ABC for Bering Sea pollock, and that TAC is almost always completely harvested each year. The pollock TAC accounts for a large portion of the total groundfish available for harvest under the OY range for all BSAI groundfish. For example, in 2014 the Bering Sea pollock ABC is 1,369,000 mt and the TAC is 1,267,000 mt (79 FR 12108, March 04, 2014). This TAC level means that the sum of the TACs for all remaining BSAI groundfish in 2014 must not exceed 733,000 mt to ensure that the sum of the TACs for all BSAI groundfish does not exceed 2 million mt. It follows that setting TACs equal to ABCs for flathead sole, rock sole, and yellowfin sole would further limit or eliminate harvest opportunities in the remaining non-pollock groundfish fisheries that also must be accommodated within the 2 million mt TAC limit. Although there is a relatively large biomass of flathead sole, rock sole,

and yellowfin sole, and relatively large ABCs, compared to other BSAI groundfish species, the TACs set for these three flatfish species have not been fully harvested in recent years. Some of the reasons for the relatively limited harvests of flathead sole, rock sole, and yellowfin sole include the uncertain nature of harvest in these multi-species flatfish fisheries, operational factors specific to the CDQ Program and Amendment 80 fisheries, and economic conditions. These factors are described in more detail below in the ''CDQ Program'' and ''Amendment 80 Program'' sections of this preamble. For these reasons the Council did not recommend setting the TAC equal to ABC for flathead sole, rock sole, and yellowfin sole in 2014.

During the annual harvest specification process, the Council and NMFS must apportion the flathead sole, rock sole, and yellowfin sole TAC according to specific regulatory requirements. First, regulations require that NMFS reserve 10.7 percent of the TAC for each of these species for use by CDQ groups (see regulations at §§ 679.20(b)(1)(ii)(C) and 679.31). Second, the remaining TAC for each of these species is reduced by an incidental catch allowance (ICA) to account for incidental catch of flathead sole, rock sole and yellowfin sole by non-CDQ and non-Amendment 80 Program participants (see regulations at §§ 679.20(a)(8) and (10)). For the purposes of this proposed action, incidental catch refers to the flatfish caught and retained while targeting another species or species group. For example, NMFS must accommodate incidental catch of yellowfin sole in the Bering Sea pollock fishery by including an amount in the ICA that will accommodate incidental catch in that fishery; NMFS must also add an amount to the yellowfin sole ICA to accommodate incidental catch in all other non-CDQ and non-Amendment 80 fisheries. Third, the remainder of the TAC is assigned to Amendment 80 Program and non-Amendment 80 Program participants as required for each species. Regulations require that the flathead sole and rock sole TACs remaining after establishing the CDQ reserves and ICAs are fully assigned to the Amendment 80 Program (see Table 33 to part 679). The yellowfin sole TAC remaining after establishing the CDQ reserve and the ICA is apportioned between the Amendment 80 sector and the BSAI trawl limited access sector (i.e., non-Amendment 80 trawl vessels) according to a specific formula that varies with the abundance of yellowfin sole (see Table 34 to part 679 for additional detail).

CDQ Program

The CDQ Program is an economic development program associated with federally managed fisheries in the BSAI. The purpose of the CDQ Program is to provide western Alaska communities with the opportunity to participate and invest in BSAI fisheries, to support economic development in western Alaska, to alleviate poverty, to provide economic and social benefits for residents of western Alaska, and to achieve sustainable and diversified local economies in western Alaska.

Regulations establishing the CDQ Program were first implemented in 1992 (57 FR 46133, October 7, 1992). Additional provisions applicable to the CDQ Program were incorporated in the Magnuson-Stevens Act in 1996 through the Sustainable Fisheries Act (Pub. L. 104–297). Regulations implementing the CDQ Program provide an exclusive harvest privilege for a portion of the groundfish, crab, and halibut annual catch limits for use by non-profit entities representing specific eligible western Alaska communities. These exclusive harvest privileges are known as CDQ allocations. A total of 65 communities are authorized under section 305(i)(1)(D) of the Magnuson-Stevens Act to participate in the CDQ Program. These communities participate in the CDQ Program through six nonprofit corporations (CDQ groups) that manage and administer the CDQ allocations, investments, and economic development projects. These communities, and their CDQ groups, are identified in the Magnuson-Stevens Act at section 305(i)(1)(D).

The CDQ Program is defined as a catch share program because it provides an exclusive harvest privilege (i.e., a CDQ allocation) to a specific fishery participant (i.e., a CDQ group) for its exclusive use. The CDQ Program allocates a portion of commercially important BSAI groundfish species, including flathead sole, rock sole, and yellowfin sole, to the CDQ groups. Specific to this proposed action, section 305(i)(1)(B) of the Magnuson-Stevens Act requires an annual allocation of 10.7 percent of the TAC of flathead sole, rock sole, and yellowfin sole to the CDQ Program. Section 305(i)(1)(C) of the Magnuson-Stevens Act clarifies that 10 percent of the TAC for flathead sole, rock sole, and yellowfin sole is allocated among the six CDQ groups, based on the percentage allocations that were in effect on March 1, 2006, while the remaining 0.7 percent of the TAC for each of these species is distributed among CDQ groups based on the percentage allocations agreed on by a Board of Directors, serving in its capacity as the Administrative Panel or is allocated by the Secretary based on the nontarget needs of eligible CDQ groups in the absence of an Administrative Panel decision (see section 305(i)(1)(G) of the Magnuson-Stevens Act). Currently, the Western Alaska Community Development Association (WACDA) serves as the Administrative Panel specified in the Magnuson-Stevens Act and defines the allocation of 0.7 percent of the TAC for each of these species among the CDQ groups. Section 1.6.1 of the RIR/IRFA prepared for this action provides additional detail on the CDQ allocations of flathead sole, rock sole, and yellowfin sole to the CDQ Program as a whole, and to each CDQ group.

NMFS prohibits any CDQ group from exceeding its CDQ allocation (see regulations at § 679.7(d)(3)). NMFS established this regulatory prohibition to hold CDQ groups accountable for maintaining their catch below their CDQ allocations. NMFS determined that this management measure is appropriate because CDQ groups have greater control over their harvesting activities, and are not engaged in a ''race for fish'' that can occur in fisheries that do not receive an exclusive harvest privilege. The CDQ allocations allow CDQ groups to make operational choices to improve fishery returns, reduce bycatch, and reduce fish discards. These operational changes are not likely to occur under a race for fish. Since the implementation of the CDQ Program, CDQ groups have maintained all harvests within their CDQ allocations with very few overages.

CDQ groups can also transfer their CDQ allocation among CDQ groups to provide an opportunity for CDQ groups to more fully harvest their allocations (see regulations at § 679.5(n)). This transfer provision helps CDQ groups ensure that they can receive a transfer if needed and have adequate allocations to avoid exceeding their CDQ allocation.

Currently, the six CDQ groups harvest their flathead sole, rock sole, and yellowfin sole CDQ allocations through contracts with Amendment 80 and non-Amendment 80 harvesting partners. Although the CDQ groups vary individually in the degree to which they harvest their flathead sole, rock sole, and yellowfin sole CDQ allocations, the six CDQ groups have not collectively harvested their allocations in recent years. For example, from 2008 through 2012, CDQ groups have collectively harvested approximately 12 percent of their flathead sole, 30 percent of their rock sole, and 39 percent of their

yellowfin sole CDQ allocations. Section 1.6.1 of the RIR/IRFA provides additional detail on the dynamics that can affect the ability of CDQ groups to fully harvest their flathead sole, rock sole, and yellowfin sole CDQ allocations. Those dynamics are also summarized in the ''Amendment 80 Program'' section of the preamble.

Amendment 80 Program

In June 2006, the Council adopted Amendment 80 to the BSAI FMP, which was implemented in 2008 with a final rule published in 2007 (72 FR 52668, September 14, 2007) and is commonly known as the Amendment 80 Program. Among other measures, the Amendment 80 Program authorized the allocation of six BSAI groundfish species to trawl catcher/processors (C/Ps) that are not specifically listed as authorized to conduct directed fishing for Bering Sea pollock under the American Fisheries Act of 1998 (AFA) (Pub. L. 105–227, Title II of Division C). The minimum participation requirements to enter this non-AFA trawl C/P subsector were established by Congress in section 219(a)(7) of the BSAI Catcher Processor Capacity Reduction Program, which is contained within the Department of Commerce and Related Agencies Appropriations Act, 2005 (Pub. L. No. 108–447). Based on these criteria, NMFS determined that 28 non-AFA trawl C/Ps originally qualified for the Amendment 80 Program. These non-AFA trawl C/Ps are commonly referred to as Amendment 80 vessels or the Amendment 80 sector. The final rule implementing Amendment 80 provides additional detail on the Amendment 80 Program (72 FR 52668, September 14, 2007). Key elements of the Amendment 80 Program applicable to this proposed action are summarized here.

NMFS issued an Amendment 80 quota share (QS) permit to each person holding the catch history of an original qualifying Amendment 80 vessel beginning in 2008. The amount of QS issued was based on the qualifying Amendment 80 vessel's catch history of six license limitation groundfish species, known as Amendment 80 species (i.e., Aleutian Islands Pacific ocean perch, Atka mackerel, flathead sole, Pacific cod, rock sole, and yellowfin sole), in the BSAI from 1998 through 2004. The sum of all Amendment 80 QS issued for an Amendment 80 species is defined as the Amendment 80 QS pool.

The Amendment 80 Program is intended primarily to improve retention and utilization of fishery resources; encourage fishing practices with lower discard rates; and improve the opportunity for increasing the value of harvested species while lowering operational costs. The Amendment 80 Program accomplishes these goals by encouraging the formation of cooperatives and the development of cooperative fishing practices among all persons holding Amendment 80 QS permits. Amendment 80 cooperatives are eligible to receive cooperative quota (CQ), which represents an exclusive harvest privilege for a portion of the TAC for each Amendment 80 species annually. Throughout this preamble, the term CQ is used to refer to Amendment 80 CQ. An Amendment 80 cooperative receives an allocation of CQ for a specific Amendment 80 species based on the proportion of the total amount of Amendment 80 QS assigned to that cooperative (e.g., an Amendment 80 cooperative would receive 60 percent of the flathead sole CQ if the members of the cooperative held 60 percent of the flathead sole QS). In any given fishing year, Amendment 80 sector participants who do not choose to join a harvesting cooperative must fish in the Amendment 80 limited access fishery, without an exclusive harvest privilege. Participants in the Amendment 80 limited access fishery race for fish with other participants in that fishery. Amendment 80 cooperatives receive CQ that allows vessel operators to make operational choices to reduce discards, reduce bycatch, and improve the value of Amendment 80 species harvests because the incentives of the Amendment 80 limited access fishery—to maximize catch rates to capture a larger share of the available catch—are removed. Amendment 80 cooperatives, like CDQ groups, operate as catch share fisheries. The Amendment 80 Program provides an exclusive harvest privilege (i.e., CQ) to a specific fishery participant (i.e., an Amendment 80 cooperative) for its exclusive use. The benefits realized by the Amendment 80 Program are described more fully in the final rule implementing Amendment 80 (72 FR 52668, September 14, 2007).

NMFS prohibits any Amendment 80 cooperative from exceeding its CQ allocation (see regulations at § 679.7(o)(4)(iv)). NMFS established this regulatory prohibition to hold Amendment 80 cooperatives accountable for maintaining their catch below their CQ allocations. NMFS determined that this management measure is appropriate because Amendment 80 cooperatives have greater control over their harvesting activities, and are not engaged in a race for fish that can occur in fisheries that do not receive exclusive harvest privileges. No Amendment 80 cooperative has exceeded any of its CQ allocations since the implementation of the Amendment 80 Program.

Although the Amendment 80 Program has met many of its goals, Amendment 80 cooperatives have found it difficult to predict the amount of flathead sole, rock sole, and yellowfin sole that can be taken when specifically targeting those species, while ensuring adequate CQ remains to accommodate incidental harvest of these species while targeting other species (e.g., an Amendment 80 cooperative must ensure that it has adequate yellowfin sole CQ to accommodate both a targeted yellowfin sole fishery and all incidental harvest of yellowfin sole in all other BSAI fisheries). Section 1.5.3 of the RIR/IRFA prepared for this action provides additional detail on specific conditions that can constrain the full use of a cooperative's flathead sole, rock sole, and yellowfin sole CQ. Those factors are briefly summarized here.

As an Amendment 80 cooperative approaches the maximum harvest permitted under its CQ, all participants in the cooperative must modify their fishing behavior to avoid exceeding that CQ allocation. Amendment 80 cooperative members rely on their cooperative managers to assist them in their multi-species flatfish fisheries to ensure cooperatives do not exceed their CQ allocation. Prior to the start of the fishing year, Amendment 80 cooperative managers consider the specific fishing plans of cooperative members, and anticipated incidental catch of flathead sole, rock sole, and yellowfin sole by cooperative members in other fisheries in the BSAI. However, the relative catch composition of flathead sole, rock sole, and yellowfin sole can be unpredictable from month to month, and from year to year. Because of this uncertainty, Amendment 80 cooperative managers may recommend cooperative members limit the harvest of certain species early in the fishing year. For example, Amendment 80 cooperative members may choose to stop fishing in the valuable rock sole roe fishery that occurs in the early part of the year (winter), to ensure adequate rock sole CQ is available to accommodate incidental harvest of rock sole while fishing for yellowfin sole from late summer through fall. If rock sole incidental catch is lower than expected in the fall fisheries, too much rock sole CQ may have been set aside and there may no longer be adequate opportunity for cooperative members to target rock sole at the end of the fishing year and fully use the remaining rock sole CQ. The economic loss of this foregone

harvest may be amplified because the Amendment 80 cooperative members did not harvest as much of the higher value roe-bearing rock sole as could have been possible earlier in the fishing year.

Variations in environmental conditions also can constrain the ability of cooperative managers and cooperative members to predict changes in catch composition over time and space. The location of flathead sole, rock sole, and yellowfin sole aggregations on fishing grounds, particularly those that can be harvested with limited bycatch of halibut, is affected by the location of colder water, ''cold pool,'' on the Eastern Bering Sea shelf. Ice conditions in the Bering Sea, which can vary substantially from year to year, can effectively preclude vessels from reaching specific fishing grounds where flathead sole, rock sole, and yellowfin sole are typically harvested. Vessel operators may have to shift harvesting to other non-flatfish species during these conditions. This shift could increase incidental harvest of flathead sole, rock sole, and yellowfin sole, and decrease the number of opportunities for cooperative members to target these flatfish later in the fishing year. The unpredictable nature of environmental conditions limits the ability of cooperative managers and vessel operators to predict harvest rates or harvest amounts.

Market conditions may also affect harvests. BSAI flatfish are sold into a global market, and a wide array of factors may make harvests of a given flatfish species more or less economically desirable, or not economically viable to harvest. These market conditions may change throughout the year, and cooperative managers may have a difficult time coordinating fishing plans to accommodate uncertainty in incidental harvest rates, unpredictable environmental conditions, and changing market conditions.

As the fishing year progresses, vessel operators and cooperative managers can better predict whether they will fully harvest their flathead sole, rock sole, and yellowfin sole CQ. However, harvest opportunities later in the year may be limited due to the lack of time to fully harvest CQ for a specific species before the end of the year and the expiration of the annual CQ permit. As noted earlier, environmental conditions could limit access to fishing grounds for specific species, and changing market conditions may make it uneconomic to harvest a species later in a year.

During the development of the Amendment 80 Program, the Council and NMFS recognized the broad range of intra- and inter-annual factors that can affect catch composition. As noted in the preamble to the final rule for the Amendment 80 Program, this variability could be addressed within cooperatives and between cooperatives through non-regulatory contractual agreements (72 FR 52668, September 14, 2007). Specifically, Amendment 80 cooperatives have established private contractual arrangements stipulating processes and procedures cooperative members use to share information on catch rates and ensure access to CQ issued to the cooperative (i.e., intra-cooperative transfers) as needed, while ensuring other members are not unduly constrained.

The Amendment 80 Program incorporates regulatory provisions that are designed to facilitate the harvest of flathead sole, rock sole, and yellowfin sole. Regulations provide that if, during a fishing year, NMFS determines that a portion of the flathead sole, rock sole, or yellowfin sole ICA or yellowfin sole TAC assigned to the BSAI trawl limited access sector is unlikely to be harvested, NMFS may reallocate that remaining amount to Amendment 80 cooperatives in proportion to the amount of Amendment 80 QS for that flatfish species assigned to that cooperative (see regulations at § 679.20(a)(10)(iii)(B)). This provision provides additional harvest opportunities to Amendment 80 cooperatives to the extent there are remaining amounts of ICAs or BSAI trawl limited access yellowfin sole TAC.

The Amendment 80 Program established provisions that allow the transfer of CQ between cooperatives to allow more efficient use of Amendment 80 species among cooperatives (72 FR 52668, September 14, 2007, see regulations at § 679.91(g)). Inter-cooperative transfers have been used to maximize the harvest of flathead sole, rock sole, and yellowfin sole CQ. Beginning in 2011, and in each year since, each Amendment 80 QS holder has been a member of one of the two Amendment 80 cooperatives. Since 2011, the use of inter-cooperative transfers increased (see Section 1.4.1 of the RIR/IRFA prepared for this action).

In 2009, the Council recommended, and NMFS adopted, revisions to the inter-cooperative transfer provisions to allow post-delivery transfers in the Amendment 80 Program (74 FR 42178, August 21, 2009). These revisions mitigate potential overages, reduce enforcement costs, and provide for more precise TAC management and more value from the harvests for participants. Post-delivery transfers also increase fleet flexibility and allow more efficient use of resources. The flexibility to complete transfers after deliveries reduces the potential that some CQ will remain unharvested if a cooperative is not able to harvest its CQ allocation without the risk of an overage, and minimizes the potential for CQ overages because a CQ account can be balanced after delivery (see regulations at § 679.7(o)(4)(v)). Section 1.4.1 of the RIR/IRFA prepared for this action provides additional detail on non-regulatory and regulatory measures used to maximize the harvest of flathead sole, rock sole, and yellowfin sole CQ.

Although a broad range of non-regulatory arrangements exist and regulatory measures have been implemented to aid in the more complete harvesting of flathead sole, rock sole, and yellowfin sole CQ, these measures do not fully address the range of conditions summarized here that can constrain harvest. Although annual harvest rates by Amendment 80 cooperatives can vary, from 2008 through 2012, Amendment 80 cooperatives harvested approximately 21 percent of their flathead sole, 55 percent of their rock sole, and 48 percent of their yellowfin sole CQ. The fact that harvests of flathead sole, rock sole, and yellowfin sole are substantially below the available CQ suggests that existing management measures may not provide the flexibility needed to allow more complete harvest.

The factors discussed here that limit Amendment 80 cooperatives from fully harvesting their allocations also apply to the CDQ groups. As noted in the ''CDQ Program'' section of this preamble, CDQ groups contract with both Amendment 80 and non-Amendment 80 vessels to harvest their flathead sole, rock sole, and yellowfin sole CDQ allocations. Both Amendment 80 vessels and non-Amendment 80 vessels fishing CDQ allocations are affected by the same uncertain operational conditions (e.g., difficultly predicting harvest rates of flatfish in target and non-target fisheries), unpredictable environmental conditions, and market conditions that can limit harvest. Recent harvests of flathead sole, rock sole, and yellowfin sole by the six CDQ groups have been substantially below CDQ allocations, as described in Section 1.6.1 of the RIR/IRFA and the ''CDQ Program'' section of this preamble. This indicates that existing management measures applicable to CDQ groups may not provide the flexibility needed to allow more complete harvest.

Objectives of and Rationale for This Proposed Action

The objective of this proposed action is to establish a new accounting methodology that would provide CDQ groups and Amendment 80 cooperatives with additional opportunities to fully harvest flathead sole, rock sole, or yellowfin sole allocations, while ensuring ABCs cannot be exceeded. This proposed action would establish regulatory limits to ensure that the individual ABCs for flathead sole, rock sole, and yellowfin sole would not be exceeded, while facilitating a more complete harvest of one or more of these flatfish species, up to the ABC for a species, if specific conditions are met. Although an individual TAC (not ABC) may be exceeded, this proposed rule would establish a regulatory mechanism designed to prevent the sum of all TACs for flathead sole, rock sole, and yellowfin sole from being exceeded, thereby ensuring the sum of BSAI groundfish TACs does not exceed 2 million mt. Moreover, because no exchange can exceed the ABC reserve and because the action requires the consideration of flathead sole, rock sole, and yellowfin sole catch during the harvest of groundfish and incidental catch of non-groundfish species prior to any flatfish exchange, this proposed action would ensure that the ABC for each flatfish species would not be exceeded. This proposed action is designed to provide the tools necessary to maximize the sustainable harvest of flathead sole, rock sole, and yellowfin sole, and thus continues to achieve the OY in the BSAI groundfish fisheries.

The rationale for this proposed action follows. Flathead sole, rock sole, and yellowfin sole are valuable species that are not fully harvested due to a variety of statutory and regulatory constraints on the setting of TACs and operational, economic, and environmental limitations described previously in this preamble and detailed in Sections 1.5 and 1.6 of the RIR/IRFA prepared for this action. The proposed modifications provide additional flexibility to existing management practices and are appropriate given the fact that CDQ groups and Amendment 80 cooperatives are participating in catch share fisheries that are capable of limiting their overall harvests within specific catch limits, and CDQ groups and Amendment 80 cooperatives are subject to strict management controls that prohibit fishing beyond these catch limits as described in the ''CDQ Program'' and ''Amendment 80 Program'' sections of this preamble.

Although CDQ groups and Amendment 80 cooperatives have a range of regulatory tools available to maximize harvests, such as the ability to transfer allocations of flathead sole, rock sole, and yellowfin sole between CDQ groups or between Amendment 80 cooperatives to increase overall harvesting opportunities, the existing harvest patterns indicate that neither CDQ groups or Amendment 80 cooperatives are likely to fully harvest their existing allocations (see the ''CDQ Program'' and ''Amendment 80 Program'' sections of this preamble and Sections 1.5 and 1.6 of the RIR/IRFA prepared for this action). The Council and NMFS expect that additional regulatory tools will promote increased harvest of CDQ and CQ allocations. This proposed action is not intended to completely resolve the complex issues that have constrained the CDQ groups and Amendment 80 cooperatives from fully harvesting their flatfish allocations. This proposed action is intended to provide the flexible management necessary to mitigate a diverse range of conditions that may limit catch of flathead sole, rock sole, and yellowfin sole.

This proposed action is also intended to preserve the Council's and NMFS' ability to consider a broad range of factors when determining how much flexibility to provide CDQ groups and Amendment 80 cooperatives through the annual harvest specifications process. For example, the Council could recommend setting the ABC reserve below the ABC surplus for flathead sole, rock sole, and yellowfin sole to account for any management uncertainty as a precautionary measure. If approved, this action promotes the Council's and NMFS' ability to ensure a transparent annual harvest specification process and articulate the criteria by which the Council and NMFS are making those decisions.

The objectives of this proposed action are consistent with the 10 National Standards established under the Magnuson-Stevens Act. The proposed action addresses the Magnuson-Stevens Act National Standards and would balance a number of competing objectives for fishery conservation and management. These include National Standard 1, National Standard 8, and National Standard 9. National Standard 1 requires that conservation and management measures shall prevent overfishing while achieving, on a continuing basis, the optimum yield from each fishery for the U.S. fishing industry. The ability to harvest the entire TAC for each groundfish fishery, in any given year, is not determinative of whether the BSAI groundfish fishery achieves optimum yield. Providing the opportunity for the CDQ groups and the Amendment 80 cooperatives to maximize catch, retention, and utilization of flathead sole, rock sole, and yellowfin sole while maintaining catch at or below the ABC for each species is one aspect of achieving optimum yield in the long term. National Standard 8 requires considering the importance of fishery resources to fishing communities and minimizing adverse economic impacts on such communities. This action is intended to improve the ability of CDQ groups to harvest their allocations, which could increase the economic benefits that CDQ groups and western Alaska communities derive from the BSAI groundfish fisheries. National Standard 9 requires that conservation and management measures shall, to the extent practicable, minimize bycatch. This proposed action is intended to result in higher retention and utilization of groundfish without increasing overall bycatch of groundfish or non-groundfish species beyond existing limitations, such as the ABCs.

Other species of flatfish that are harvested by CDQ groups and the Amendment 80 sector would not be subject to this proposed action, because only Arrowtooth flounder and Bering Sea Greenland turbot are allocated to the CDQ groups, and no other flatfish species are allocated to the Amendment 80 Program. Therefore, these other flatfish species are still subject to a race for fish. This limits the ability of CDQ groups and Amendment 80 cooperatives to constrain harvests of non-allocated flatfish species, and reduces the management and enforcement tools available to NMFS to ensure harvests do not exceed an ABC. In addition, other flatfish fisheries are not allocated to CDQ groups and Amendment 80 cooperatives and are not prosecuted in the same manner as mixed-stock flatfish fisheries that include flathead sole, rock sole, and yellowfin sole (see Sections 1.5.3 and 1.6.1 of the RIR/IRFA prepared for this action). Therefore, there is no need to provide the same management flexibility to the other flatfish fisheries as this proposed action would provide to the CDQ groups and Amendment 80 cooperatives. Participants that do not join an Amendment 80 cooperative and participate in an Amendment 80 limited access fishery would not be subject to this proposed rule and would not receive the opportunity to access an ABC reserve (see Section 1.4.2 in the RIR/IRFA prepared for this action). The

participants in the Amendment 80 limited access fishery would continue in a race for fish. Such participants are not subject to the strict management controls that apply to CDQ groups and Amendment 80 cooperatives, such as prohibitions against fishing once a CDQ or CQ allocation is reached. Similarly, the BSAI trawl limited access sector, which is allocated a portion of the yellowfin sole TAC, is not assigned an exclusive harvest privilege as are CDQ groups and the Amendment 80 cooperatives. The lack of exclusive harvest privileges in the Amendment 80 limited access fishery and the BSAI trawl limited access sector limits NMFS' ability to strictly manage harvests to ensure an ABC is not exceeded; therefore, those sectors would not be eligible for Flatfish Exchanges.

Proposed Action

Summary of Regulatory Changes

This action proposes the following changes to the existing regulatory text at 50 CFR part 679:

- Add definitions for ''ABC reserve,'' ''ABC surplus,'' ''Amendment 80 ABC reserve,'' ''CDQ ABC reserve,'' and ''Flatfish Exchange'' to § 679.2.
- Add § 679.4(p) to establish the Flatfish Exchange Application requirements and annual limitations on the number of Flatfish Exchanges.
- Add requirements for the Preliminary Amendment 80 Cooperative Flatfish Exchange Report to § 679.5(s)(7).
- Add § 679.20(b)(1)(iii) to establish the ABC reserves, CDQ ABC reserves, and Amendment 80 ABC reserves as part of the general limitations.
- Revise § 679.20(c)(1)(iv) to include Flatfish Exchange specifications in the annual proposed groundfish harvest specifications.
- Revise § 679.20(c)(3)(iii) to include Flatfish Exchange specifications in the annual final groundfish harvest specifications.
- In § 679.31, revise the headings of paragraphs (a) and (b) to be consistent with this proposed rule.
- Add § 679.31(a)(5) to establish the CDQ ABC reserve as part of the CDQ allocations.
- Add § 679.31(b)(4) to allocate CDQ ABC reserves among CDQ groups.
- Add § 679.31(d) to allow CDQ groups to access the CDQ ABC reserves.
- Add § 679.91(i) to establish the Amendment 80 ABC reserves as annual harvest privileges allocated to Amendment 80 cooperatives, and to allow Amendment 80 cooperatives to access the Amendment 80 ABC reserves.

ABC Surplus

NMFS proposes revising regulations at § 679.2 to define the ABC surplus for flathead sole, rock sole, and yellowfin sole in the BSAI as the difference between each species' annual ABC and TAC. NMFS proposes to revise regulations at § 679.20(c)(1)(iv) to clarify that the ABC surplus would be specified in the annual harvest specifications. Under this proposed action, the Council would continue to set the OFLs, ABCs, and TACs, and allocations of flathead sole, rock sole, and yellowfin sole in the annual harvest specifications process, and once those amounts are determined, the annual harvest specifications would also specify an ABC surplus for each flatfish species. The ABC surplus would represent the maximum additional amount of flathead sole, rock sole or yellowfin sole that could be harvested above the TAC. However, the actual amount available for harvest would be the ABC reserve.

ABC Reserve

NMFS proposes to revise regulations at § 679.2 to define the ABC reserve for flathead sole, rock sole, and yellowfin sole in the BSAI as an amount equal to or less than the ABC surplus, depending on whether the Council and NMFS reduce the surplus for social, economic, or ecological considerations during the determination of the annual harvest specifications. NMFS proposes to revise annual harvest specifications regulations at § 679.20(b)(1)(iii)(A) to clarify that the ABC reserve would be set after consultation with the Council. Unless the Council recommends otherwise, or NMFS determines there is a need to set the ABC reserve below the ABC surplus, NMFS would set the ABC reserve equal to the ABC surplus for each species. Setting the ABC reserve as a portion of the ABC surplus, or equal to the ABC surplus, would ensure that the total amount of each species that is accessible would not exceed the ABC.

Section 1.4.3 of the RIR/IRFA prepared for this action provides additional detail on why the ABC reserve may be set below the ABC surplus, and those factors are briefly summarized here. The Council or NMFS could choose to establish a precautionary buffer to accommodate uncertainty in harvests under an ICA, or to address a range of socioeconomic considerations. As noted in the ''Annual Harvest Specifications'' section of this preamble, the amount of harvest in the ICA can be uncertain from year to year because it is difficult to predict specific incidental harvest rates in the non-CDQ and non-Amendment 80 fisheries. The Council and NMFS may deem it appropriate to set the ABC reserve below the ABC surplus to accommodate potential harvests of non-target species greater than the ICA. Similarly, the Council may recommend establishing an ABC reserve less than the ABC surplus to accommodate market conditions. For example, the Council may be concerned that setting an ABC reserve for a given species at a specific harvest level could increase supply, and thereby reduce demand and reduce the ex-vessel value of that flatfish species. These effects could affect CDQ groups, Amendment 80 cooperatives, and other fishery participants differently. The Council and NMFS could evaluate these socioeconomic considerations when setting the ABC reserve. The specific recommendation to set an ABC reserve below the ABC surplus for a specific flatfish species would be described in the annual harvest specifications.

Once the ABC reserve is identified for a flatfish species, the ABC reserve for that flatfish species would then be apportioned among CDQ groups and Amendment 80 cooperatives. NMFS would publish the allocation of ABC reserve available to CDQ groups and Amendment 80 cooperatives in the proposed and final harvest specifications. NMFS proposes revising annual harvest specification regulations at §§ 679.20(c)(1)(iv) and (3)(iii) to clarify that the proposed and final harvest specifications would include the ABC surplus, the ABC reserve, the CDQ ABC reserve, the apportionment of the CDQ ABC reserve among CDQ groups, the Amendment 80 ABC reserve, and the apportionment of the Amendment 80 ABC reserve among Amendment 80 cooperatives. This revision would be necessary to clearly inform the public about the specific proposed and final allocations. Section 1.4.2 of the RIR/IRFA provides additional detail on the process for allocating the ABC reserve among CDQ groups and Amendment 80 cooperatives.

CDQ ABC Reserve

NMFS proposes to revise regulations at § 679.2 to define a ''CDQ ABC reserve'' as 10.7 percent of the amount of the flathead sole, rock sole, or yellowfin sole ABC reserve that is allocated among CDQ groups as annually calculated according to the methods described at § 679.31(b)(4). As noted in the ''CDQ Program'' portion of the preamble, the CDQ Program is currently allocated 10.7 percent of the TAC for these flatfish species. This proposed rule would allocate 10.7 percent of the ABC reserve of each of these flatfish species to the CDQ

Program to be consistent with section 305(i)(1)(B) of the Magnuson-Stevens Act that requires that 10.7 of the TAC be assigned to the CDQ Program.

NMFS proposes to revise annual harvest specification regulations at § 679.20(b)(1)(iii)(B) to clarify that an amount equal to 10.7 percent of the ABC reserves for flathead sole, rock sole, and yellowfin sole would be allocated to CDQ ABC reserves for each species. The CDQ ABC reserves would be further allocated to each CDQ group as described under § 679.31(b)(4). NMFS proposes to revise regulations at § 679.31(b)(4) to clarify that NMFS would allocate each CDQ ABC reserve among CDQ groups consistent with the requirements in section 305(i)(1) of the Magnuson-Stevens Act for allocating TAC among CDQ groups. Specifically, 10 percent of the ABC reserve would be allocated in fixed percentages to specific CDQ groups as described in section 305(i)(1)(C) of the Magnuson-Stevens Act, while the remaining 0.7 percent of the ABC reserve would be allocated among CDQ groups according to WACDA agreements (i.e., the Administrative Panel established in section 305(i)(1)(G) of the Magnuson-Stevens Act). Alternative methods for calculating catch limits and allocating the CDQ ABC reserve were considered by the Council and NMFS and rejected because they would not be consistent with 305(i)(1) of the Magnuson-Stevens Act (see Section 1.4.6 of the RIR/IRFA for additional information).

Amendment 80 ABC Reserve

NMFS proposes to revise regulations at § 679.2 to define an ''Amendment 80 ABC reserve'' as the amount of the flathead sole, rock sole, or yellowfin sole ABC reserve that remains for each species after designating the amount assigned to the CDQ ABC reserves. The Amendment 80 ABC reserve would be allocated among Amendment 80 cooperatives annually as calculated according to the methods described at § 679.91(i)(2).

NMFS proposes to revise annual harvest specification regulations at § 679.20(b)(1)(iii)(C) to clarify that the Amendment 80 ABC reserve would be calculated as the ABC reserves as reduced by the CDQ ABC reserve. Given the allocation of 10.7 percent of the ABC reserve to the CDQ ABC reserve, 89.3 percent of the ABC reserve would be allocated to the Amendment 80 ABC reserve. The Amendment 80 ABC reserves would be apportioned to each Amendment 80 cooperative as described under § 679.91(i)(2).

NMFS proposes to revise regulations at § 679.91(i)(2) to clarify that the amount of Amendment 80 ABC reserve for each species of flathead sole, rock sole, and yellowfin sole assigned to an Amendment 80 cooperative is equal to the amount of Amendment 80 QS units of that species assigned to that Amendment 80 cooperative by Amendment 80 QS holders divided by the total Amendment 80 QS pool for that species multiplied by the Amendment 80 ABC reserve for that species. For example, if 60 percent of the flathead sole, 30 percent of the rock sole, and 20 percent of the yellowfin sole Amendment 80 QS were assigned to an Amendment 80 cooperative by Amendment 80 QS holders, that Amendment 80 cooperative would receive access to 60 percent of the flathead sole, 30 percent of the rock sole, and 20 percent of the yellowfin sole Amendment 80 ABC reserves. This approach would ensure that each Amendment 80 cooperative would receive access to a portion of the Amendment 80 ABC reserve in proportion to its Amendment 80 QS holdings of a species, and in turn would provide flexibility for Amendment 80 cooperatives to engage in exchanges to maximize their overall harvest of flatfish. Alternative methods for allocating the Amendment 80 ABC reserve among Amendment 80 cooperatives were considered and rejected because they did not provide an equitable allocation of the Amendment 80 ABC reserve in proportion to Amendment 80 QS holdings (see Section 1.4.6 of the RIR/IRFA prepared for this action for additional information).

Under these proposed regulations, it is important to note that if all Amendment 80 QS holders have not joined an Amendment 80 cooperative, not all of an Amendment 80 ABC reserve would be allocated. Using the example provided in this section of the preamble, if there is only one Amendment 80 cooperative in the Amendment 80 sector that is assigned 60 percent of the flathead sole, 30 percent of the rock sole, and 20 percent of the yellowfin sole Amendment 80 QS, and all other Amendment 80 QS holders are participating in the Amendment 80 limited access fishery, then NMFS would allocate only 60 percent of the flathead sole, 30 percent of the rock sole, and 20 percent of the yellowfin sole Amendment 80 ABC reserve to that Amendment 80 cooperative. The remaining 40 percent of the flathead sole, 70 percent of the rock sole, and 80 percent of the yellowfin sole Amendment 80 ABC reserve would not be allocated. NMFS notes that this example differs from the one previously provided to the Council in the Section 1.4.2 of the RIR/IRFA prepared for this action when the Council recommended Amendment 105. Under both examples, the scenario is identical (i.e. some Amendment 80 QS holders are not members of the single cooperative). Unfortunately, the example in the RIR/IRFA prepared for Amendment 45 that was available to the Council at that time did not consider that allocating 100 percent of the Amendment 80 ABC reserve to a portion of the Amendment 80 QS holders is inconsistent with overall Council intent that the apportionment of the Amendment 80 ABC reserve for a species be in proportion the amount of the Amendment 80 QS pool the Amendment 80 cooperative is assigned for that species. Allocating all the Amendment 80 ABC reserve to a cooperative out of proportion to its Amendment 80 QS holdings could create incentives for members of the sole Amendment 80 cooperative to exclude Amendment 80 QS holders from an Amendment 80 cooperative to increase the amount of the Amendment 80 ABC reserve available to it. These effects on Amendment 80 cooperative formation and membership were not considered or addressed by the Council at the time it recommended Amendment 105. The example and method for apportioning the Amendment 80 ABC reserve provided above in this preamble is consistent with Council intent and would instead assign the Amendment 80 ABC reserve in proportion to the amount of the Amendment 80 QS pool an Amendment 80 cooperative is assigned. Additional detail on this example and the consistency of this example with the Council's overall recommendation for Amendment 105 is provided in Section 1.4.2 of the RIR/IRFA prepared for this action.

In years where no CQ is assigned, Flatfish Exchanges could not occur among Amendment 80 Program participants. Since the establishment of the Amendment 80 Program, one or two Amendment 80 cooperatives have been established each year. Since 2011, all Amendment 80 QS holders are members of an Amendment 80 cooperative. However, it is possible that Amendment 80 QS holders may be unwilling or unable to establish a cooperative. In years when no Amendment 80 cooperatives are established, NMFS would not assign any Amendment 80 ABC reserve because there would be no Amendment 80 cooperatives receiving CQ.

Example of an Annual Harvest Specification of ABC Surplus, ABC Reserve, CDQ ABC Reserve, and Amendment 80 ABC Reserve

To aid the reader in understanding this proposed action, this section provides a hypothetical example of the annual harvest specification process and the allocation of the ABC surplus, ABC reserve, CDQ ABC reserve, and Amendment 80 ABC reserve. This example uses the 2014 OFLs, ABCs, and TACs established for flathead sole, rock sole, and yellowfin sole in the final 2014 and 2015 harvest specifications (79 FR 12108, March 04, 2014). This example also uses the 2014 apportionments of CDQ among CDQ groups, and the allocation of CQ among Amendment 80 cooperatives that existed at the time of publication of the final 2014 and 2015 harvest specifications (79 FR 12108, March 04, 2014). Specifically, there are six CDQ groups, and two Amendment 80 cooperatives that include all of the Amendment 80 QS holders. For this example, the flathead sole and rock sole ABC reserves are set 1,000 mt below the ABC surpluses for those species, the yellowfin sole ABC reserve is set 500 mt below the yellowfin sole ABC surplus.

Table 1 describes the OFLs, ABCs, ABC surpluses, ABC surpluses, CDQ ABC reserves, and Amendment 80 ABC reserves based on the proposed allocation methodologies described previously in this preamble. Table 2 shows the allocation of the TAC among the ICA, CDQ Program, Amendment 80 Program, and the BSAI trawl limited access sector.

TABLE 1—EXAMPLE OF ALLOCATION OF ABC SURPLUS, ABC RESERVE, CDQ ABC RESERVE, AND AMENDMENT 80 ABC RESERVE FOR FLATHEAD SOLE, ROCK SOLE, AND YELLOWFIN SOLE USING FINAL 2014 HARVEST SPECIFICATION AMOUNTS IN METRIC TONS

Species	OFL	ABC	TAC	ABC surplus	ABC reserve	CDQ ABC reserve (10.7% of ABC reserve)	Amendment 80 ABC reserve (89.3% of ABC reserve)
Flathead sole	79,633	66,293	24,500	41,793	40,793	4,365	36,428
Rock sole	228,700	203,800	85,000	118,800	117,800	12,605	105,195
Yellowfin sole	259,700	238,800	184,000	54,800	54,300	5,810	48,490

TABLE 2—EXAMPLE OF ALLOCATION OF TAC AMONG ICA, CDQ PROGRAM, AMENDMENT 80 PROGRAM, AND BSAI TRAWL LIMITED ACCESS FISHERY ALLOCATIONS FOR FLATHEAD SOLE, ROCK SOLE, AND YELLOWFIN SOLE USING FINAL 2014 HARVEST SPECIFICATION AMOUNTS IN METRIC TONS

Species	TAC	ICA	CDQ program allocation	Amendment 80 program allocation	BSAI trawl limited access fishery allocation
Flathead sole	24,500	5,000	2,622	16,879	0
Rock sole	85,000	8,000	9,095	67,905	0
Yellowfin sole	184,000	2,400	19,688	132,205	29,707

Table 3 describes the allocation of the ABC reserve among the six CDQ groups based on the CDQ allocations that existed at the time of publication of the final 2014 and 2015 harvest specifications (79 FR 12108, March 04, 2014). A matrix describing the specific allocations to each CDQ group, for each CDQ species, is available on the Alaska Region Web site at *http://alaskafisheries.noaa.gov/cdq/allocations/annualmatrix2014.pdf.* As noted earlier in this preamble, the CDQ ABC reserve is equal to 10.7 percent of the ABC reserve for each of these flatfish species. Table 3 describes the allocation of the CDQ ABC reserve based on the CDQ allocations to CDQ groups applicable in 2014.

TABLE 3—EXAMPLE OF CDQ ABC RESERVE ALLOCATIONS TO CDQ GROUPS FOR FLATHEAD SOLE, ROCK SOLE, AND YELLOWFIN SOLE USING FINAL 2014 HARVEST SPECIFICATION AMOUNTS IN METRIC TONS

[The allocations to each CDQ group are provided as a percentage within the parentheses]

Species	CDQ ABC reserve	CDQ group and allocation of CDQ ABC reserve					
		APICDA	BBEDC	CBSFA	CVRF	NSEDC	YDFDA
Flathead sole	4,365	875 (20.05%)	921 (21.09%)	387 (8.87%)	654 (14.98%)	653 (14.96%)	875 (20.05%)
Rock sole	12,605	3,034 (24.07%)	2,900 (23.00%)	1,004 (7.96%)	1,379 (10.96%)	1,382 (10.96%)	2,907 (23.06%)
Yellowfin sole	5,810	1,610 (27.71%)	1,390 (23.92%)	465 (8.00%)	369 (6.35%)	423 (7.29%)	1,552 (26.72%)

Aleutian Islands Pribilof Community Development Association (APICDA), Bristol Bay Economic Development Corporation (BBEDC), Central Bering Sea Fishermen's Association (CBSFA), Coastal Villages Region Fund (CVRF), Norton Sound Economic Development Corporation (NSEDC), Yukon Delta Fisheries Development Association (YDFDA).

Table 4 describes the allocation of the Amendment 80 ABC reserve between the two Amendment 80 cooperatives that applied for CQ in 2014. In 2014, all Amendment 80 QS holders are members of one of these cooperatives. The allocation of ABC reserve is based on the proportion of the Amendment 80 QS of flathead sole, rock sole, and yellowfin sole that each Amendment 80 cooperative is assigned. As noted earlier in this preamble, the Amendment 80

ABC reserve is equal to 89.3 percent of the ABC reserve for each species.

TABLE 4—EXAMPLE OF AMENDMENT 80 ABC RESERVE ALLOCATIONS TO AMENDMENT 80 COOPERATIVES FOR FLATHEAD SOLE, ROCK SOLE, AND YELLOWFIN SOLE USING FINAL 2014 HARVEST SPECIFICATION AMOUNTS IN METRIC TONS

[The allocations to each Amendment 80 cooperative are provided as a percentage within the parentheses]

Species	Amendment 80 ABC reserve	Amendment 80 cooperative allocation of amendment 80 ABC reserve	
		Alaska groundfish cooperative (AGC)	Alaska seafood cooperative (ASC)
Flathead sole	36,428	7,151 (19.63%)	29,277 (80.37%)
Rock sole	105,195	30,054 (28.57%)	75,141 (71.43%)
Yellowfin sole	48,490	20,826 (42.95%)	27,664 (57.05%)

Flatfish Exchange Application

This proposed action would require that a CDQ group or an Amendment 80 cooperative would have to submit a Flatfish Exchange Application to NMFS. That application would have to be approved by NMFS, and revised TACs would have to be published in the **Federal Register**, before unused CDQ or CQ would be exchanged for a portion of its CDQ ABC reserve or Amendment 80 reserve. NMFS' approval of a Flatfish Exchange Application is necessary to ensure that ABC's are not exceeded. As proposed, NMFS would have the authority to disapprove an application if it is likely that an ABC will be exceeded. This section describes this process and associated, proposed regulations, and provides an example of a Flatfish Exchange.

NMFS proposes to revise regulations at § 679.2 to define a ''*Flatfish Exchange*'' as the exchange of unused CDQ, or Amendment 80 CQ, of flathead sole, rock sole, or yellowfin sole in the BSAI for an equivalent amount (in metric tons) of CDQ ABC reserve or Amendment 80 ABC reserve, respectively, for flathead sole, rock sole, or yellowfin sole in the BSAI other than the species listed for exchange on the Flatfish Exchange Application as described in a notice of adjustment or apportionment in the **Federal Register**.

NMFS proposes to revise regulations at § 679.4(p) to describe the Flatfish Exchange Application. NMFS would process any completed Flatfish Exchange Application submitted by a CDQ group or Amendment 80 cooperative. The Flatfish Exchange Application must specify the amounts of flathead sole, rock sole, and yellowfin sole to be exchanged, and certify the information submitted is true, correct, and complete. The specific requirements of the Flatfish Exchange Application are provided on the form that would be posted at the Alaska Region Web site: *http://alaskafisheries.noaa.gov* once Amendment 105 and its implementing regulations become effective. All Flatfish Exchange Applications would be submitted electronically through the Alaska Region Web site: *http://alaskafisheries.noaa.gov.* Currently, CDQ groups and Amendment 80 cooperatives submit a range of applications and reports electronically. This provision would be consistent with existing electronic submittal requirements applicable to CDQ groups and Amendment 80 cooperatives and would reduce administrative burden and costs.

NMFS' approval of a Flatfish Exchange Application would be required prior to the use of the CDQ or CQ subject to the Flatfish Exchange. NMFS would approve the Flatfish Exchange Application if: (1) The CDQ group or Amendment 80 cooperative exchanging flathead sole, rock sole, or yellowfin sole has sufficient CDQ ABC reserves or Amendment 80 ABC reserves for the flatfish species for which it is requesting to increase its CDQ or CQ; (2) the CDQ group or Amendment 80 cooperative requesting an exchange of flathead sole, rock sole, yellowfin sole exchanges an equal amount of unused CDQ allocation or unused CQ for the amount of flathead sole, rock sole, or yellowfin sole received from the CDQ ABC reserve or Amendment 80 ABC reserve; and (3) the CDQ group or Amendment 80 cooperative has not submitted three Flatfish Exchange applications, as described in the next section of this preamble. NMFS notes that unused CDQ allocation could only be exchanged for CDQ ABC reserve, and unused CQ could only be exchanged for Amendment 80 ABC reserve. Furthermore, NMFS notes that a CDQ group could only submit a Flatfish Exchange Application for an amount of CDQ ABC reserve assigned to that CDQ group, and an Amendment 80 cooperative could only submit a Flatfish Exchange Application for an amount of Amendment 80 ABC reserve assigned to that Amendment 80 cooperative.

Proposed regulations at § 679.4(p)(4) would provide that no Flatfish Exchange would take effect until notification has been published in the **Federal Register** with a statement of the findings on which the apportionment or adjustment is based. This provision would provide clear notification to the public and the affected CDQ group or Amendment 80 cooperative that the Flatfish Exchange Application has been approved and display the resulting adjustment in CDQ ABC reserve and CDQ allocation for that CDQ group, or the resulting adjustment in Amendment 80 ABC reserve and CQ for that Amendment 80 cooperative.

Proposed regulations at § 679.4(p)(5) would provide that each NMFS-approved Flatfish Exchange Application is debited as one Flatfish Exchange, and that an approved Flatfish Exchange is effective on the date of publication of the notice of adjustment or apportionment in the **Federal Register**. NMFS proposes to revise regulations at § 679.31(d) to note that CDQ groups would need to submit and have NMFS approve a Flatfish Exchange Application to access their CDQ ABC reserve. Similarly, NMFS proposes to revise regulations at § 679.91(i)(3) to note that Amendment 80 cooperatives would need to submit and have NMFS approve a Flatfish Exchange Application to access their Amendment 80 ABC reserve.

To aid the reader, an example of a Flatfish Exchange is provided in Table 5. For this example, NMFS assumes that the Amendment 80 cooperative, Alaska Seafood Cooperative (ASC), has submitted, and NMFS has approved, a Flatfish Exchange Application. This example assumes the 2014 allocations of Amendment 80 ABC reserve that ASC would receive are based on the final 2014 and 2015 harvest specifications and described in Table 4 of this preamble. This example assumes that ASC has not previously engaged in any Flatfish Exchanges, has an adequate amount of unused CQ remaining, and has adequate ABC reserve. In this example, ASC is requesting an additional 3,500 mt of yellowfin sole CQ from its ABC reserve, for which it would exchange 1,500 mt of unused flathead sole CQ, and 2,000 mt of unused rock sole CQ. No net change in the total flatfish available for harvest to the ASC would result, but the Amendment 80 cooperative would gain additional access to yellowfin sole and forego access to flathead sole and rock sole.

TABLE 5—EXAMPLE OF FLATFISH EXCHANGE BY AN AMENDMENT 80 COOPERATIVE (ASC) FOR FLATHEAD SOLE, ROCK SOLE, AND YELLOWFIN SOLE USING FINAL 2014 ANNUAL HARVEST SPECIFICATION AMOUNTS IN METRIC TONS

Species	Before exchange		Exchange		After exchange	
	ASC ABC reserve before flatfish exchange	ASC CQ before flatfish exchange	Adjustment to ABC reserve amount	Adjustment to CQ amount	ASC ABC reserve after flatfish exchange	ASC CQ after flatfish exchange
Flathead sole	29,277	13,566	+1,500	−1,500	30,777 (+1,500)	12,066 (−1,500)
Rock sole	75,141	48,505	+2,000	−2,000	77,141 (+2,000)	46,505 (−2,000)
Yellowfin sole	27,664	75,426	−3,500	+3,500	24,164 (−3,500)	78,926 (+3,500)
Sum	132,082	137,497	0	0	132,082	137,497

As noted earlier in this preamble and illustrated in Table 5, under this proposed action there would be no net change in the total available sum of flathead sole, rock sole, and yellowfin sole available for harvest as CDQ or CQ. However, CDQ groups or Amendment 80 cooperatives could use Flatfish Exchanges to increase the available CDQ or CQ of one or two flatfish species, by foregoing an amount of unused CDQ or CQ for another flatfish species, but not maximize the harvest of all three flatfish species during a calendar year. In the example provided in Table 5, the ASC cooperative has increased the amount of yellowfin sole available for harvest. In this example, ASC would reduce the amount of yellowfin sole ABC reserve available to exchange for flathead sole or rock sole CQ in future exchanges. As is clear from the example, there is no net increase in the ABC reserve, as summed across the three flatfish species as a result of this exchange. Moreover, Table 5 clarifies that Flatfish Exchanges will result in the same sum of flathead sole, rock sole, and yellowfin sole available for harvest before, and after the exchange.

NMFS is proposing regulations at § 679.4(p)(3) to provide that NMFS would not approve any Flatfish Exchange that could result in exceeding an ABC or ABC reserve for a species. As proposed, this method for implementing Flatfish Exchanges is designed to ensure that although an individual flatfish TAC could be exceeded, the ABC will not be exceeded. As proposed, NMFS would have the authority to disapprove an application if NMFS determines it is likely that an ABC will be exceeded because of fishing effort in another groundfish fishery. For example, the risk of exceeding an ABC could arise if incidental catch of the allocated flatfish species in other fisheries (e.g., catch of yellowfin sole by AFA vessels in the BSAI pollock fishery) was much higher than anticipated. NMFS will review each Flatfish Exchange Application and consider approval or disapproval in light of incidental catch levels occurring in other groundfish fisheries. NMFS would consider the amount of incidental harvest under the ICAs and the amount of harvest in the yellowfin sole BSAI limited access fishery before a Flatfish Exchange Application would be approved. For example, if the ICAs for flathead sole, rock sole, or yellowfin sole were exceeded, or the BSAI trawl limited access fishery exceeded its yellowfin sole allocation, NMFS would not approve a Flatfish Exchange Application to harvest from an ABC reserve if the exchange would cause a species' ABC to be exceeded. Moreover, NMFS would consider increases in an Amendment 80 cooperative's CQ from unused ICAs or reallocations of yellowfin sole from the BSAI limited access fishery, and inter-cooperative CQ or CDQ transfers, before approving a Flatfish Exchange Application to ensure accurate amounts in CDQ allocation and CQ accounts.

As noted earlier in this preamble, Flatfish Exchanges would not be effective until publication of a notice in the **Federal Register**. The requirement for publication in the **Federal Register** would allow NMFS to fully consider the Flatfish Exchange Application and total catch of flathead sole, rock sole, and yellowfin sole. NMFS could disapprove the Flatfish Exchange if, upon further review of the Flatfish Exchange Application and all other sources of catch, approval of the Flatfish Exchange Application could cause an ABC or ABC reserve to be exceeded. NMFS believes that any such situation is highly unlikely given methods in place to accurately track catch, but this provision would ensure proper accounting before any Flatfish Exchange is approved.

To further simplify the catch accounting for Flatfish Exchanges, NMFS proposes regulations at § 679.4(p)(3)(vii) to clarify that Flatfish Exchanges would not be approved unless the Flatfish Exchange Application is received and approved by NMFS during the same calendar year that the Flatfish Exchange would be implemented. As described earlier in this preamble, CDQ groups and Amendment 80 cooperatives have initiated CDQ and CQ transfers at the end of the year to account for catch that occurred earlier during the year. This proposed provision would clarify that all Flatfish Exchanges would need to be completed and received by NMFS prior

the end of the calendar year to ensure proper accounting for catch and ABC reserves. NMFS notes that CDQ groups and Amendment 80 cooperatives would need to submit a Flatfish Exchange Application prior to the end of the calendar year that the exchange would occur to allow for at least 10 business days for NMFS review and approve (or deny) the Flatfish Exchange Application (i.e., publication in the **Federal Register**).

The Council considered and rejected alternatives that would have either limited the ability to exchange flathead sole or rock sole ABC reserve for yellowfin sole CQ, or limit the maximum amount of yellowfin sole CQ that could be received through a Flatfish Exchange (see Section 1.8.4 of the RIR/IRFA prepared for this action). These measures were considered as a way to mitigate potential adverse impacts of additional harvest opportunities that a Flatfish Exchange could provide to Amendment 80 cooperatives relative to other fishery participants. Participants in the yellowfin sole fishery in the BSAI trawl limited access sector raised specific concerns. The Council and NMFS rejected these alternative approaches because the Council and NMFS have the ability to set the TAC amounts and modify the yellowfin sole ABC reserve under this proposed action based on a broad range of biological and socioeconomic factors, including the potential impact on the yellowfin sole BSAI trawl limited access fishery during the annual harvest specifications process. Section 1.4.6 of the RIR/IRFA provides additional detail on these alternatives considered but not selected for this proposed action.

Flatfish Exchange Limits

NMFS proposes to revise regulations at § 679.4(p)(5) to limit to three the number of Flatfish Exchanges each CDQ group or Amendment 80 cooperative could execute within a fishing year to limit the administrative burden associated with Flatfish Exchanges. The Council and NMFS considered an option that would not limit the number of Flatfish Exchanges. However, as noted in Section 1.8.3 of the RIR/IRFA, unlimited Flatfish Exchanges would increase administrative burden and costs for NMFS, and was not deemed as necessary to provide adequate opportunities for CDQ groups and Amendment 80 cooperatives to engage in Flatfish Exchanges for additional harvest opportunities. For example, a CDQ group could exchange unused yellowfin sole CDQ allocation for an equal tonnage of rock sole CDQ ABC reserve early in the year if such a need is projected. Subsequently, the same CDQ group could exchange any unused yellowfin sole CDQ allocation for an equal tonnage of flathead sole or rock sole ABC reserve if needed later in the year. This would still provide CDQ group an opportunity for a final Flatfish Exchange by the end of the calendar year if needed. The Council recommended, and NMFS proposes an annual limit of three Flatfish Exchanges based on input from CDQ groups, Amendment 80 cooperatives, and the need to balance the administrative concerns raised by NMFS. Assuming that the same number of CDQ groups (six) and Amendment 80 cooperatives (two) that existed in 2014 exist in future years, NMFS could process a maximum of 24 Flatfish Exchanges per year.

Preliminary Amendment 80 Cooperative Flatfish Exchange Report

NMFS proposes to revise regulations at § 679.5(s)(7) to require each Amendment 80 cooperative to submit annually to the Council a Preliminary Amendment 80 Cooperative Flatfish Exchange Report reviewing the use of the cooperative's Amendment 80 ABC reserve for flathead sole, rock sole, and yellowfin sole. Each Amendment 80 cooperative would report the number of vessels used to harvest the Amendment 80 cooperative's quota; the number of Flatfish Exchanges and dates those exchanges were approved; the types and amounts of CQ and Amendment 80 ABC reserve used; and the dates, types, and amounts of inter-cooperative CQ transfers. This report would be due to the Council by December 1 of each year. This report would allow the Council, during the annual harvest specifications process, to assess the use of Flatfish Exchanges, the use of CQ, and weigh the potential socioeconomic impact of Flatfish Exchanges before establishing the ABC reserve. The Council would make this report available to the public.

NMFS is not proposing to require Amendment 80 cooperatives to disclose catch data that may be considered confidential. When the Council recommended this proposed action, it requested that NMFS implement Federal regulations that would require each Amendment 80 cooperative to provide catch information for flathead sole, rock sole, and yellowfin sole catch as part of this new proposed reporting requirement. However, Amendment 80 cooperative catch data at this level of fisheries participation currently is considered confidential and therefore protected under section 402 of the Magnuson-Stevens Act (16 U.S.C. 1881a). Therefore, these data cannot be disclosed to the Council or the public. NMFS notes that information on aggregate catch by all vessels operating in the BSAI are available by species at NMFS Web site at *http://alaskafisheries.noaa.gov* or could be provided to the Council on request at the December meeting, or any time prior to that meeting.

NMFS has issued a proposed rule that, if implemented, will provide additional clarification on the release of catch information under ''limited access privilege'' programs, as defined under the Magnuson-Stevens Act (see 77 FR 30486, May 23, 2012). As proposed, that rule addresses the release of catch information collected under the Amendment 80 Program. NMFS is currently in the process of developing a final rule for that proposed rule. Because that proposed rule broadly addresses the release of confidential data under section 402 of the Magnuson-Stevens Act, it could provide for the release of the currently-confidential catch information on flathead sole, rock sole, and yellowfin sole the Council requested when it recommended this proposed action. If that final rule provides additional clarification on the amount and type of data that may be released by Amendment 80 cooperatives prior to the publication of a final rule for this proposed action (if approved), then NMFS would amend the rule proposed here so that the final rule accommodates the specific catch information requests made by the Council.

The proposed reporting requirements are intended to maintain a transparent groundfish harvest specifications process while providing the Council and the public additional information that could be used to identify any fishery impacts of this proposed action on non-Amendment 80 cooperative participants. The Council and NMFS acknowledged that the use of the flexibility provided by this proposed rule could have impacts on other fishery participants, which were previously assessed (see Categorical Exclusion, see **ADDRESSES**), but could be better understood by obtaining information on the use of CQ transfers and Flatfish Exchanges by Amendment 80 cooperatives. For example, the use of Flatfish Exchanges could allow additional access to markets or modify the timing of harvests that may have socioeconomic impacts on non-Amendment 80 Program fisheries (see Sections 1.8.2.3 and 1.8.2.4 of the RIR/IRFA prepared for this action for more detail).

The Council and NMFS determined the best way to monitor potential socioeconomic changes in non-

Amendment 80 Program fisheries would be to review the transfers of flathead sole, rock sole, and yellowfin sole CQ among Amendment 80 cooperatives, and the amount of Amendment 80 ABC reserves used by Amendment 80 cooperatives. Reporting the amounts and frequency of Flatfish Exchanges (and CQ transfers) could aid the Council, NMFS, and the public in providing a greater understanding of the relative impacts of this proposed action on harvests of flathead sole, rock sole, and yellowfin sole. The Preliminary Amendment 80 Cooperative Flatfish Exchange Report would provide the Council, NMFS, and the public with specific data on the timing and amount CQ transferred between cooperatives, and the number and amounts of flathead sole, rock sole, and yellowfin sole exchanged through Flatfish Exchanges.

The proposed Preliminary Amendment 80 Cooperative Flatfish Exchange Report would be integrated into the annual harvest specifications process. The Council would receive the reports, receive public comment on these reports, and incorporate that information in its ABC reserve decisions. Under this proposed action, the Council would use these data when deciding whether to recommend ABC reserve amounts below the ABC surplus amounts for flathead sole, rock sole, and yellowfin sole. This proposed reporting requirement is intended to maximize the Council's ability to consider factors that it may not otherwise have available relating to the use of flathead sole, rock sole, and yellowfin sole when it considers establishing an ABC reserve during its December Council meeting.

This proposed action would not modify existing reporting requirements for the CDQ groups. The Council did not recommend, and this proposed rule would not propose a similar report from CDQ groups, given the small amount of the ABC reserve (10.7 percent) allocated to CDQ Program, and the limited impact that the use of Flatfish Exchanges by CDQ groups would be likely to have on other fishery participants. The potential impact of the use of the CDQ ABC reserve is limited by the fact that the CDQ ABC reserve is allocated among six CDQ groups, and no one CDQ group is likely to be able to substantially increase its harvests relative to the TAC for any species under this proposed action (see Tables 1 and 3 of this preamble for an example of the amount of TAC and ABC reserve available to each CDQ group). This proposed rule would not modify existing regulations that require each Amendment 80 cooperative to submit an Annual Amendment 80 cooperative report (see regulations at § 679.5(s)(6)).

Classification

Pursuant to section 304(b)(1)(A) and 305(d) of the Magnuson-Stevens Act, the NMFS Assistant Administrator has determined that Amendment 105 to the BSAI FMP and this proposed rule are consistent with the BSAI FMP, provisions of the Magnuson-Stevens Act and other applicable law, subject to further consideration after public comment.

This proposed rule has been determined to be not significant for the purposes of Executive Order 12866.

An IRFA was prepared, as required by section 603 of the Regulatory Flexibility Act (RFA). The IRFA describes the economic impact this proposed rule, if adopted, would have on small entities. A description of the action, why it is being considered, and the legal basis for this action are contained at the beginning of this section and in the **SUMMARY** section of the preamble and are not repeated here. Each of the statutory requirements of section 603(b) and (c) has been addressed and is summarized as follows. A copy of the complete IRFA is available from NMFS (see **ADDRESSES**).

Number and Description of Small Entities Regulated by the Proposed Action

CDQ groups and Amendment 80 cooperatives are directly regulated through this proposed action through their allocations of harvesting privileges for flathead sole, rock sole, and yellowfin sole.

On June 20, 2013, the Small Business Administration (SBA) issued a final rule revising the small business size standards for several industries effective July 22, 2013. 78 FR 37398 (June 20, 2013). The rule increased the size standard for Finfish Fishing from $4.0 to 19.0 million, Shellfish Fishing from $4.0 to 5.0 million, and Other Marine Fishing from $4.0 to 7.0 million, Id. at 37400 (Table 1). The new size standards were used to prepare the IRFA for this action.

All the vessels and companies participating in the Amendment 80 sector have been affiliated with one of two Amendment 80 cooperatives, the Alaska Seafood Cooperative or the Alaska Groundfish Cooperative, since 2011. The most recent gross revenue data for Amendment 80 cooperatives is from 2011, and these data indicate that the total gross revenues earned by the vessels in each of the Amendment 80 cooperatives exceed $19.0 million. Thus, the vessels and companies participating in Amendment 80 cooperatives are all large entities, either by virtue of their own gross revenues or by virtue of their affiliation with other large entities through their cooperative membership. Therefore, this analysis addresses the impact on the directly regulated small entities (i.e., CDQ groups) and not Amendment 80 cooperatives.

The six CDQ groups are all small entities by virtue of their non-profit status. These groups include Aleutian Pribilof Island Community Development Association, Bristol Bay Economic Development Corporation, Central Bering Sea Fishermen's Association, Coastal Villages Region Fund, Norton Sound Economic Development Corporation, and Yukon Delta Fisheries Development Association. Each of these groups is organized as an independently owned and operated not-for-profit entity and none is dominant in its field; consequently, each is a ''small entity'' under the RFA.

All six CDQ groups annually are allocated groundfish, halibut, and crab CDQ allocations. These groups participate, either directly or indirectly, in the commercial harvest of these allocations. Commercially valuable allocations include (among others) Alaska pollock, Pacific cod, sablefish, Pacific halibut, Greenland turbot, Atka mackerel, various flatfish species, as well as king and Tanner crab. CDQ groups receive royalties from the successful harvest of CDQ by commercial fishing companies, as well as access to employment and training opportunities for their communities' residents. Royalties and income from CDQ harvesting activities are used to fund economic development projects in CDQ communities. In 2011, the six CDQ groups earned approximately $311.5 million in royalties (i.e., gross revenues) from the harvest of CDQ allocations. CDQ Program activities are discussed in detail in Section 1.6 of the RIR/IRFA prepared for this action.

Duplicate, Overlapping, or Conflicting Federal Rules

No duplication, overlap or conflict between this proposed action and existing Federal rules has been identified.

Description of Significant Alternatives That Minimize Adverse Impacts on Small Entities

An IRFA also requires a description of any significant alternatives to the preferred alternative (Alternative 3, option 1 described below) that accomplish the stated objectives, are consistent with applicable statutes, and that would minimize any significant economic impact of the proposed rule on small entities. The suite of potential

actions includes three alternatives and associated options. A detailed description of these alternatives and options is provided in Section 1.4 of the RIR/IRFA prepared for this action.

Alternative 1 is the status quo, and does not provide additional harvesting flexibility for flathead sole, rock sole, or yellowfin sole to CDQ groups. Alternative 2 would establish a CDQ ABC reserve for flathead sole, rock sole, or yellowfin sole that is allocated among CDQ groups equal to 10.7 percent of the ABC surplus for each species, while Alternative 3 would allow the Council or NMFS to establish a CDQ ABC reserve for flathead sole, rock sole, or yellowfin sole that is allocated among CDQ groups that may be less than or equal to 10.7 percent of the ABC surplus for each species after considering socioeconomic or biological considerations.

Alternative 2 is less restrictive, and thus has fewer adverse impacts on the directly regulated CDQ groups. While Alternative 2 may be less restrictive to CDQ groups, Alternative 3 was adopted because it provides the Council flexibility to address socioeconomic or biological considerations during the annual harvest specifications process. The Council and NMFS may deem it appropriate to set the ABC reserve below the ABC surplus to accommodate potential harvests of non-target species greater than the ICA. Similarly, the Council may recommend establishing an ABC reserve less than the ABC surplus to accommodate market conditions.

The Council also considered three options that could apply to either Alternative 2 or Alternative 3; however, options 2 and 3 are mutually exclusive. Option 1 would establish an ABC surplus, ABC reserve, and CDQ ABC reserve for flathead sole, rock sole, and yellowfin sole, but limit the number of Flatfish Exchanges to no more than three Flatfish Exchanges per CDQ group per calendar year. Option 2 would create an ABC surplus, ABC reserve, and CDQ ABC reserve only for flathead sole and rock sole. Option 3 limits the maximum amount of the ABC surplus, ABC reserve, and CDQ ABC reserve for yellowfin sole available to CDQ groups. Options 2 and 3 are more restrictive than Option 1 and provide fewer opportunities for CDQ groups to use Flatfish Exchanges to maximize their harvests, particularly their harvests of yellowfin sole. Therefore, Options 2 or 3 would have more adverse impacts on CDQ groups than the preferred alternative, which combines Alternative 3 and Option 1.

Option 1, which limits CDQ groups to three Flatfish Exchanges during a year, is more restrictive than the adoption of Alternative 3 without the option. Alternative 3 without Option 1 would not limit the number of Flatfish Exchanges that a CDQ group could undertake each calendar year. However, Option 1 was meant to limit the potential administrative burden and costs on NMFS of the proposed action. As explained in Section 1.8.3 of the RIR/IRFA prepared for this action, the Council determined and NMFS agreed that a maximum of three Flatfish Exchanges per calendar year per CDQ group would meet the goals and objectives for the proposed action, would not unduly constrain CDQ groups, and would reduce administrative burden and costs on NMFS. The Flatfish Exchange limits are intended to allow the CDQ groups to make an adequate number of exchanges needed to accommodate uncertain harvesting conditions throughout the year as described earlier in the preamble and in Section 1.6.1 of the RIR/IRFA prepared for this action.

Projected Reporting, Recordkeeping, and Other Compliance Requirements

This action is projected to have a negligible impact on the recordkeeping and reporting requirements of CDQ groups participating in the BSAI groundfish fisheries. The regulations proposed under this amendment directly impact the recordkeeping and reporting requirements of Amendment 80 cooperatives, but not those of the CDQ groups. Under this action, NMFS would not require the directly regulated small entities (i.e., CDQ groups) to annually report data on Flatfish Exchanges. Moreover, the decision to submit a Flatfish Exchange Application is entirely voluntary on the part of all affected entities. If a CDQ group chooses to submit a Flatfish Exchange Application, it will need to submit the information required. The information required in a Flatfish Exchange Application is similar to the information already required by for transfers of CDQ allocations among CDQ groups (see regulations at § 679.5(n)). Some recordkeeping and reporting requirements would be required by Amendment 80 cooperatives, which are considered large entities and is not addressed further here.

Collection-of-Information Requirements

This proposed rule contains collection-of-information requirements subject to review and approval by OMB under the Paperwork Reduction Act (PRA). These requirements have been submitted to OMB for approval under OMB Control Number 0648–0565. Public reporting burden is estimated to average 30 minutes for the Flatfish Exchange Application and 25 hours for Preliminary Amendment 80 Cooperative Flatfish Exchange Report. The estimated response times include the time for reviewing instructions, searching existing data sources, gathering and maintaining the data needed, and completing and reviewing the collection of information.

Public comment is sought regarding: Whether this proposed collection of information is necessary for the proper performance of the functions of the agency, including whether the information will have practical utility; the accuracy of the burden estimate; ways to enhance the quality, utility, and clarity of the information to be collected; and ways to minimize the burden of collecting the information, including the use of automated collection techniques or other forms of information technology. Send comments on these or any other aspects of the collection of information to NMFS at the **ADDRESSES** above, and email to *OIRA_Submission@omb.eop.gov,* or fax to (202) 395–7285.

Notwithstanding any other provision of the law, no person is required to respond to, nor shall any person be subject to a penalty for failure to comply with, a collection of information subject to the requirements of the PRA, unless that collection of information displays a currently valid OMB Control Number.

List of Subjects in 50 CFR Part 679

Alaska, Fisheries, Reporting and recordkeeping requirements.

Dated: June 24, 2014.

Eileen Sobeck,

Assistant Administrator for Fisheries, National Marine Fisheries Service.

For the reasons set out in the preamble, 50 CFR part 679 is proposed to be amended as follows:

PART 679—FISHERIES OF THE EXCLUSIVE ECONOMIC ZONE OFF ALASKA

■ 1. The authority citation for 50 CFR part 679 continues to read as follows:

Authority: 16 U.S.C. 773 *et seq.;* 1801 *et seq.;* 3631 *et seq.;* Pub. L. 108–447.

■ 2. In § 679.2, add definitions for ''ABC reserve''; ''ABC surplus''; ''Amendment 80 ABC reserve''; ''CDQ ABC reserve''; and ''Flatfish Exchange'' in alphabetical order to read as follows:

§ 679.2 Definitions.

* * * * *

ABC reserve means, for purposes of flathead sole, rock sole, and yellowfin sole in the BSAI, an amount, not to exceed the ABC surplus, that may be reduced for social, economic, or ecological considerations according to § 679.20(b)(1)(iii).

ABC surplus means, for purposes of flathead sole, rock sole, and yellowfin sole in the BSAI, the difference between each species' annual ABC and TAC.

* * * * *

Amendment 80 ABC reserve means the amount of the flathead sole, rock sole, or yellowfin sole ABC reserve that remains after designating the amount assigned to the CDQ ABC reserve and that is allocated among Amendment 80 cooperatives as calculated annually as described at § 679.91(i)(2).

* * * * *

CDQ ABC reserve means 10.7 percent of the amount of the flathead sole, rock sole, or yellowfin sole ABC reserve that is allocated among the CDQ groups as calculated annually as described at § 679.31(b)(4).

* * * * *

Flatfish Exchange means the exchange of unused CDQ, or Amendment 80 CQ, of flathead sole, rock sole, or yellowfin sole in the BSAI for an equivalent amount (in metric tons) of CDQ ABC reserve or Amendment 80 ABC reserve, respectively, for flathead sole, rock sole, or yellowfin sole in the BSAI other than the species listed for exchange on the Flatfish Exchange Application as described in a notice of adjustment or apportionment in the **Federal Register**.

* * * * *

■ 3. In § 679.4, add paragraph (p) to read as follows:

§ 679.4 Permits.

* * * * *

(p) *Flatfish Exchange Application.* (1) *Completed application.* NMFS will process only completed Flatfish Exchange Applications submitted by CDQ groups or Amendment 80 cooperatives.

(2) *Certification.* The designated representative must log into the Alaska Region Online application Web site and complete an exchange application form provided on the Web site. By using the NMFS ID, password, and Transfer Key and submitting the Flatfish Exchange Application, the designated representative certifies that all information submitted is true, correct, and complete.

(3) *Approval.* A CDQ group or Amendment 80 cooperative must receive NMFS' approval of a Flatfish Exchange Application prior to using the CDQ or Amendment 80 CQ subject to the Flatfish Exchange. NMFS will approve the Flatfish Exchange Application if:

(i) The CDQ group has sufficient CDQ ABC reserves of flathead sole, rock sole, or yellowfin sole;

(ii) The Amendment 80 cooperative has sufficient Amendment 80 ABC reserves of flathead sole, rock sole, or yellowfin sole;

(iii) The CDQ group receiving flathead sole, rock sole, or yellowfin sole from its CDQ ABC reserve exchanges an equal amount of unused CDQ of flathead sole, rock sole, or yellowfin sole, other than the species received from its CDQ ABC reserve;

(iv) The Amendment 80 cooperative receiving flathead sole, rock sole, or yellowfin sole from its Amendment 80 ABC reserve exchanges an equal amount of unused Amendment 80 CQ of flathead sole, rock sole, or yellowfin sole, other than the species received from its Amendment 80 ABC reserve;

(v) The CDQ group or Amendment 80 cooperative has not received at least three approved Flatfish Exchanges during that calendar year, as described at paragraph (p)(5) of this section;

(vi) Approval of the Flatfish Exchange Application will not cause flathead sole, rock sole, or yellowfin sole to exceed an ABC or an ABC reserve for that species; and

(vii) NMFS receives a completed Flatfish Exchange Application from a CDQ group or Amendment 80 cooperative during the calendar year for which the Flatfish Exchange would be effective, and NMFS can approve that Flatfish Exchange Application before the end of the calendar year in which the Flatfish Exchange would be effective.

(4) *Notification.* (i) No exchange, adjustment, or apportionment of flathead sole, rock sole, or yellowfin sole may take effect until a notice of adjustment or apportionment has been published in the **Federal Register** with a statement of the findings on which the apportionment or adjustment is based.

(ii) Each NMFS approved Flatfish Exchange is debited as one Flatfish Exchange. An approved Flatfish Exchange is effective on the date of publication of the notice of adjustment or apportionment in the **Federal Register**.

(5) *CDQ ABC reserve and Amendment 80 ABC reserve exchange limitations.* Each CDQ group and each Amendment 80 cooperative is limited to no more than three Flatfish Exchanges per calendar year.

■ 4. In § 679.5, redesignate paragraph (s)(7) as (s)(8) and add a new paragraph (s)(7) to read as follows:

§ 679.5 Recordkeeping and reporting (R&R).

* * * * *

(s) * * *

(7) *Preliminary Amendment 80 Cooperative Flatfish Exchange Report*—(i) *Applicability.* An Amendment 80 cooperative issued a CQ permit must submit annually to the Council a Preliminary Amendment 80 Cooperative Flatfish Exchange Report reviewing the use of the cooperative's ABC reserve for flathead sole, rock sole, and yellowfin sole.

(ii) *Time limits and submittal.* (A) The Preliminary Amendment 80 Cooperative Flatfish Exchange Report must be submitted to the North Pacific Fishery Management Council at 605 West 4th Avenue, Suite 306, Anchorage, AK 99501.

(B) The Preliminary Amendment 80 Cooperative Flatfish Exchange Report must include a review of the Flatfish Exchanges for that calendar year through October 31.

(C) The Preliminary Amendment 80 Cooperative Flatfish Exchange Report must be received by the Council not later than 1700 hours, A.l.t., December 1 of each year.

(iii) *Information required.* Each Preliminary Amendment 80 Cooperative Flatfish Exchange Report must include all of the information required on the Preliminary Amendment 80 Cooperative Flatfish Exchange Report form and all required additional documentation.

* * * * *

■ 5. In § 679.20, add paragraph (b)(1)(iii) and revise paragraphs (c)(1)(iv) and (c)(3)(iii) to read as follows:

§ 679.20 General limitations.

* * * * *

(b) * * *

(1) * * *

(iii) *ABC reserves.* (A) ABC reserves are annually established for flathead sole, rock sole, and yellowfin sole. For each flatfish species, the ABC reserve is calculated as an amount less than or equal to the ABC surplus. NMFS, after consultation with the Council, may set the ABC reserve for flathead sole, rock sole, or yellowfin sole below the ABC surplus for that species based on social, economic, or ecological considerations.

(B) *CDQ ABC reserves.* An amount equal to 10.7 percent of the ABC reserves for flathead sole, rock sole, and yellowfin sole will be allocated to a CDQ ABC reserve. The CDQ ABC reserves will be:

(*1*) Calculated during the annual harvest specifications described at

paragraph (c) of this section, as allocations to CDQ groups; and

(*2*) Allocated to each CDQ group as described under § 679.31(b)(4).

(C) *Amendment 80 ABC reserves.* Amendment 80 ABC reserves shall be calculated as the ABC reserves described under paragraph (b)(1)(iii)(A) of this section as reduced by the CDQ ABC reserves under paragraph (b)(1)(iii)(B) of this section. The Amendment 80 ABC reserves will be:

(*1*) Calculated during the annual harvest specifications described at paragraph (c) of this section, as allocations to Amendment 80 cooperatives; and

(*2*) Allocated to each Amendment 80 cooperative as described under § 679.91(i)(2).

* * * * *

(c) * * *

(1) * * *

(iv) *BSAI.* (A) The proposed harvest specifications will specify for up to two fishing years the annual TAC for each target species and apportionments thereof, PSQ reserves and prohibited species catch allowances, seasonal allowances of pollock, Pacific cod, and Atka mackerel TAC (including pollock, Pacific cod, and Atka mackerel CDQ), and CDQ reserves.

(B) The proposed harvest specifications will specify for up to two fishing years the ABC surpluses, ABC reserves, CDQ ABC reserves, CDQ ABC reserves for each CDQ group, Amendment 80 ABC reserves, and Amendment 80 ABC reserves for each Amendment 80 cooperative for flathead sole, rock sole, and yellowfin sole.

* * * * *

(3) * * *

(iii) *BSAI.* (A) The final harvest specifications will specify for up to two fishing years the annual TAC for each target species and apportionments thereof, PSQ reserves and prohibited species catch allowances, seasonal allowances of pollock (including pollock, Pacific cod, and Atka mackerel CDQ), and CDQ reserves.

(B) The final harvest specifications will specify for up to two fishing years the annual ABC surpluses, ABC reserves, CDQ ABC reserves, CDQ ABC reserves for each CDQ group, Amendment 80 ABC reserves, and Amendment 80 ABC reserves for each Amendment 80 cooperative for flathead sole, rock sole, and yellowfin sole.

* * * * *

■ 6. In § 679.31, revise paragraphs (a) heading and (b) heading and add paragraphs (a)(5), (b)(4), and (d) to read as follows:

§ 679.31 CDQ and PSQ reserves, allocations, and transfers.

(a) *CDQ, PSQ, and CDQ ABC reserves.* * * *

(5) *CDQ ABC reserves.* (See § 679.20(b)(1)(iii)(A)).

(b) *Allocations of CDQ, PSQ, and CDQ ABC reserves among the CDQ groups.* * * *

(4) *Annual allocations of CDQ ABC reserves among the CDQ groups.* (i) An amount equivalent to 10 percent of the ABC reserve for flathead sole, rock sole, and yellowfin sole as determined under the annual harvest specifications at § 679.20(c) shall be allocated among the CDQ groups based on the CDQ percentage allocations under 16 U.S.C. 1855(i)(1)(C), unless modified under 16 U.S.C. 1855(i)(1)(H); and

(ii) An amount equivalent to 0.7 percent of the ABC reserve for flathead sole, rock sole, and yellowfin sole as determined under the annual harvest specifications at § 679.20(c) shall be allocated among the CDQ groups by the panel established in section 305(i)(1)(G) of the Magnuson-Stevens Act.

* * * * *

(d) *Accessing CDQ ABC reserves.* Each CDQ group may request that NMFS approve a Flatfish Exchange to add flathead sole, rock sole, or yellowfin sole to its CDQ account in exchange for reducing its CDQ account by an equal amount of flathead sole, rock sole, or yellowfin sole. CDQ groups may request Flatfish Exchanges by submitting a completed Flatfish Exchange Application as described at § 679.4(p).

■ 7. In § 679.91, add paragraph (i) to read as follows:

§ 679.91 Amendment 80 Program annual harvester privileges.

* * * * *

(i) *Amendment 80 ABC reserves.* (1) *General.* The Regional Administrator will determine the Amendment 80 ABC reserves for flathead sole, rock sole, and yellowfin sole that will be assigned to the Amendment 80 sector as part of the annual harvest specifications described at § 679.20(c). Amendment 80 ABC reserves will be further allocated to Amendment 80 cooperative(s), as described in paragraph (i)(2) of this section.

(2) *Allocation of Amendment 80 ABC reserves to Amendment 80 cooperatives.* The amount of Amendment 80 ABC reserve for each species of flathead sole, rock sole, and yellowfin sole assigned to an Amendment 80 cooperative is equal to the amount of Amendment 80 QS units of that species assigned to that Amendment 80 cooperative by Amendment 80 QS holders divided by the total Amendment 80 QS pool for that species multiplied by the Amendment 80 ABC reserve for that species.

(3) *Accessing Amendment 80 ABC reserves.* An Amendment 80 cooperative may request that NMFS approve a Flatfish Exchange to add flathead sole, rock sole, or yellowfin sole CQ to its Amendment 80 CQ account in exchange for reducing its Amendment 80 CQ by an equal amount of flathead sole, rock sole, or yellowfin sole. An Amendment 80 cooperative may request Flatfish Exchanges by submitting a completed Flatfish Exchange Application as described in § 679.4(p).

* * * * *

[FR Doc. 2014–15185 Filed 6–27–14; 8:45 am]

BILLING CODE 3510–22–P

Notices

Federal Register

Vol. 79, No. 125

Monday, June 30, 2014

This section of the FEDERAL REGISTER contains documents other than rules or proposed rules that are applicable to the public. Notices of hearings and investigations, committee meetings, agency decisions and rulings, delegations of authority, filing of petitions and applications and agency statements of organization and functions are examples of documents appearing in this section.

DEPARTMENT OF COMMERCE

International Trade Administration

[A–201–838]

Seamless Refined Copper Pipe and Tube From Mexico: Final Results of Antidumping Duty Administrative Review; 2011–2012

AGENCY: Enforcement and Compliance, International Trade Administration, Department of Commerce.

SUMMARY: On December 24, 2013, the Department of Commerce (the Department) published in the **Federal Register** the *Preliminary Results* of the 2011–2012 administrative review of the antidumping duty order on seamless refined copper tube and pipe from Mexico.[1] This review covers two producers/exporters of the subject merchandise, GD Affiliates S. de R.L. de C.V. (Golden Dragon)[2] and Nacional de Cobre, S.A. de C.V. (Nacobre). We gave interested parties an opportunity to comment on the *Preliminary Results* and, based upon our analysis of the comments, we continue to find that sales of subject merchandise have been made at prices below normal value.

DATES: *Effective Date:* June 30, 2014.

FOR FURTHER INFORMATION CONTACT: Elizabeth Eastwood or Dennis McClure, AD/CVD Operations, Office II, Enforcement and Compliance, International Trade Administration, U.S. Department of Commerce, 14th Street and Constitution Avenue NW., Washington, DC 20230; telephone: (202) 482–3874 or (202) 482–5973, respectively.

SUPPLEMENTARY INFORMATION:

Background

On December 24, 2013, the Department published in the **Federal Register** the *Preliminary Results* of the 2011–2012 administrative review of the antidumping duty order on seamless refined copper pipe and tube from Mexico. We invited parties to comment on the *Preliminary Results.* We received case briefs from Golden Dragon, Nacobre, and the petitioners[3] on January 23, 2014. On January 28, 2014, we also received comments from Nacobre related to U.S. Customs and Border Protection (CBP) information placed on the record in January 2014.[4] On February 3, 2014, we received rebuttal briefs from Golden Dragon and the petitioners. A public hearing was held on February 20, 2014, to discuss issues raised in the briefs. On April 9, 2014, we postponed the final results by 30 days;[5] on May 15, 2014, we postponed the final results by an additional 30 days.[6]

Scope of the Order

The merchandise subject to the order[7] is seamless refined copper pipe and tube. The product is currently classified under the Harmonized Tariff Schedule of the United States (HTSUS) subheadings 7407.10.1500, 7419.99.5050, 8415.90.8065, and 8415.90.8085. Although the HTSUS numbers are provided for convenience and customs purposes, the written product description, available in the Issues and Decision Memorandum,[8] remains dispositive.

Analysis of Comments Received

All issues raised in the case and rebuttal briefs by parties in this administrative review are listed in the Appendix to this notice and addressed in the Issues and Decision Memorandum. Parties can find a complete discussion of all issues raised in this review and the corresponding recommendations in this public memorandum, which is on file electronically via Enforcement and Compliance's Antidumping and Countervailing Duty Centralized Electronic Service System (IA ACCESS). IA ACCESS is available to registered users at *http://iaaccess.trade.gov,;* the Issues and Decision Memorandum is also available to all parties in the Central Records Unit, room 7046, of the main Department of Commerce building.

In addition, a complete version of the Issues and Decision Memorandum can be accessed directly on the Web at *http://enforcement.trade.gov/frn/.* The paper copy and electronic version of the Issues and Decision Memorandum are identical in content.

Changes Since the Preliminary Results

We revised our preliminary margin calculation for Nacobre to incorporate certain changes to Nacobre's assessment rate and cost of production, as noted in Comments 7 and 8, respectively, of the accompanying Issues and Decision Memorandum. We made no changes to the calculation of Golden Dragon's

[1] *See Seamless Refined Copper Pipe and Tube From Mexico: Preliminary Results of Antidumping Duty Administrative Review; 2011–2012,* 78 FR 77651 (December 24, 2013) (*Preliminary Results*), and accompanying Preliminary Decision Memorandum.

[2] The Department has previously treated GD Affiliates S. de R.L. de C.V. as part of a single entity including: (1) GD Copper Cooperatief U.A.; (2) Hong Kong GD Trading Co. Ltd.; (3) Golden Dragon Holding (Hong Kong) International, Ltd.; (4) GD Copper U.S.A. Inc.; (5) GD Affiliates Servicios S. de R.L. de C.V.; and (6) GD Affiliates S. de R.L. de C.V., which is collectively referred to as Golden Dragon. *See, e.g., Seamless Refined Copper Pipe and Tube From Mexico: Final Results of Antidumping Duty New Shipper Review,* 77 FR 59178 (Sept. 26, 2012), and accompanying Issues and Decision Memorandum.

[3] The petitioners are Cerro Flow Products, LLC, Wieland Copper Products, LLC, Mueller Copper Tube Products, Inc. and Mueller Copper Tube Company, Inc.

[4] *See* the January 17, 2014, memorandum to the File from Elizabeth Eastwood, Senior Analyst, entitled ''Information from U.S. Customs and Border Protection (CBP) Regarding U.S. Sale of Nacional de Cobre, S.A. de C.V. (Nacobre).''

[5] *See* the April 9, 2014, memorandum to Christian Marsh, Deputy Assistant Secretary for Antidumping and Countervailing Duty Operations from James Maeder, Director, entitled ''Seamless Refined Copper Pipe and Tube from Mexico: Extension of Deadline for Final Results of Antidumping Duty Administrative Review; 2011–2012.''

[6] *See* the May 15, 2014, memorandum to Christian Marsh, Deputy Assistant Secretary for Antidumping and Countervailing Duty Operations from James Maeder, Director, entitled ''Seamless Refined Copper Pipe and Tube from Mexico: Extension of Deadline for Final Results of Antidumping Duty Administrative Review; 2011–2012.''

[7] *See Seamless Refined Copper Pipe and Tube From Mexico and the People's Republic of China: Antidumping Duty Orders and Amended Final Determination of Sales at Less Than Fair Value From Mexico,* 75 FR 71070 (November 22, 2010) (*Amended Final and Order*).

[8] *See* memorandum to Paul Piquado, Assistant Secretary for Enforcement and Compliance, from Christian Marsh, Deputy Assistant Secretary for Antidumping and Countervailing Duty Operations, entitled ''Issues and Decision Memorandum for the Final Results of the Antidumping Duty Administrative Review of Seamless Refined Copper Pipe and Tube from Mexico; 2011–2012,'' which is hereby adopted by this notice (Issues and Decision Memorandum).

weighted-average dumping margin in these final results.

Period of Review

The period of review is November 1, 2011, through October 31, 2012.

Duty Absorption

In the *Preliminary Results,* we found that antidumping duties have been absorbed by Golden Dragon and Nacobre on all U.S. sales made through their affiliated importers of record.[9] We have received no further information regarding this issue for the final results. Therefore, for the final results, we continue to find that antidumping duties have been absorbed by Golden Dragon and Nacobre on all U.S. sales made through their affiliated importers of record.

FINAL RESULTS OF THE REVIEW

Producer or exporter	Weighted-average dumping margin (percent)
GD Affiliates S. de R.L. de C.V ..	2.26
Nacional de Cobre, S.A. de C.V	0.58

Disclosure

We will disclose the calculations performed within five days of the date of publication of this notice to parties in this proceeding in accordance with 19 CFR 351.224(b).

Assessment Rate

Pursuant to section 751(a)(2)(C) of the Tariff Act of 1930, as amended (the Act), and 19 CFR 351.212(b)(1), the Department has determined, and CBP shall assess, antidumping duties on all appropriate entries of subject merchandise and deposits of estimated duties, where applicable, in accordance with the final results of this review. The Department intends to issue appropriate assessment instructions directly to CBP 41 days after publication of the final results of this administrative review pursuant to 19 CFR 356.8(a).

For Golden Dragon and Nacobre, the Department will calculate importer-specific assessment rates equal to the ratio of the total amount of dumping calculated for the importer's examined sales and the total entered value of those sales. Where an importer-specific assessment rate is zero or *de minimis* (*i.e.,* less than 0.5 percent), the Department will instruct CBP to liquidate these entries without regard to antidumping duties pursuant to 19 CFR 351.106(c)(2).

Cash Deposit Requirements

The following deposit requirements will be effective upon publication of the notice of these final results for all shipments of seamless refined copper pipe and tube from Mexico entered, or withdrawn from warehouse, for consumption on or after the publication date as provided by section 751(a)(2) of the Act: (1) The cash deposit rates for Golden Dragon and Nacobre will be equal to the weighted-average dumping margins established in the final results of this administrative review; (2) for merchandise exported by manufacturers or exporters not covered in this review but covered in a completed prior segment of the proceeding, the cash deposit rate will continue to be the company-specific rate published for the most recently completed segment; (3) if the exporter is not a firm covered in this review, a prior review, or the original investigation but the manufacturer is, the cash deposit rate will be the rate established for the most recently completed segment for the manufacturer of the merchandise; (4) the cash deposit rate for all other manufacturers or exporters will continue to be 26.03 percent, the all-others rate established in the *Amended Final and Order.* These cash deposit requirements, when imposed, shall remain in effect until further notice.

Notification to Importers

This notice also serves as a final reminder to importers of their responsibility under 19 CFR 351.402(f)(2) to file a certificate regarding the reimbursement of antidumping duties prior to liquidation of the relevant entries during this POR. Failure to comply with this requirement could result in the Department's presumption that reimbursement of antidumping duties has occurred and the subsequent assessment of doubled antidumping duties.

Administrative Protective Order

In accordance with 19 CFR 351.305(a)(3), this notice also serves as a reminder to parties subject to administrative protective order (APO) of their responsibility concerning the return or destruction of proprietary information disclosed under the APO, which continues to govern business proprietary information in this segment of the proceeding. Timely written notification of the return or destruction of APO materials or conversion to judicial protective order is hereby requested. Failure to comply with the regulations and terms of an APO is a violation subject to sanction.

Notification to Interested Parties

We are issuing and publishing this notice in accordance with sections 751(a)(1) and 777(i) of the Act and 19 CFR 351.213(h).

Dated: June 23, 2014.

Paul Piquado,

Assistant Secretary for Enforcement and Compliance.

Appendix—Issues and Decision Memorandum

Summary
Background
Margin Calculations
Scope of the Order
Discussion of the Issues
Comment 1: Legal Authority to Consider an Alternative Comparison Method in an Administrative Review
Comment 2: Withdrawal of the Regulatory Provisions Governing Targeted Dumping in Less-Than-Fair-Value Investigations
Comment 3: Differential Pricing Analysis: Establishment of Thresholds under the Administrative Procedure Act
Comment 4: Differential Pricing Analysis: Identification of a Pattern of Prices that Differs Significantly and a Meaningful Difference in the Results
Comment 5: Differential Pricing Analysis: Prices Set by Contractual Formula
Comment 6: Adverse Facts Available for Golden Dragon
Comment 7: Level of Trade for Golden Dragon
Comment 8: CBP Documentation for Nacobre
Comment 9: Nacobre's Raw Material Cost Adjustment Recommendation

[FR Doc. 2014–15280 Filed 6–27–14; 8:45 am]

BILLING CODE 3510–DS–P

[9] *See Preliminary Results* and accompanying Preliminary Decision Memorandum at 17.

DEPARTMENT OF COMMERCE

International Trade Administration

[A–533–813]

Certain Preserved Mushrooms From India: Partial Rescission of Antidumping Duty Administrative Review; 2013–2014

AGENCY: Enforcement and Compliance, International Trade Administration, Department of Commerce.

SUMMARY: The Department of Commerce (the Department) is partially rescinding its administrative review of the antidumping duty order on certain preserved mushrooms (mushrooms) from India for the period February 1, 2013, through January 31, 2014 (POR).

DATES: *Effective Date:* June 30, 2014.

FOR FURTHER INFORMATION CONTACT: Kate Johnson or Terre Keaton Stefanova, Enforcement and Compliance, International Trade Administration,

U.S. Department of Commerce, 14th Street and Constitution Avenue NW., Washington, DC 20230; telephone: (202) 482–4929 or (202) 482–1280, respectively.

SUPPLEMENTARY INFORMATION:

Background

On February 3, 2014, the Department published in the **Federal Register** a notice of ''Opportunity to Request Administrative Review'' of the antidumping duty order on mushrooms from India for the POR.[1]

On February 28, 2014, in accordance with section 751(a) of the Tariff Act of 1930, as amended (the Act), and 19 CFR 351.213(b), the Department received timely requests from Monterey Mushrooms Inc. (the petitioner), and Sunny Dell Foods Inc. (Sunny Dell), a domestic interested party, to conduct an administrative review of the sales of Agro Dutch Industries Limited (Agro Dutch), Himalya International Ltd. (Himalya), Hindustan Lever Ltd. (formerly Ponds India, Ltd.) (Hindustan), Transchem Ltd. (Transchem), and Weikfield Foods Pvt. Ltd (Weikfield).

On April 1, 2014, the Department published in the **Federal Register** a notice of initiation of an administrative review of the antidumping duty order on mushrooms from India with respect to the above-named companies.[2]

On April 17, 2014, we received a no shipment claim for the POR from Weikfield.[3]

On May 21, 2014, Sunny Dell timely withdrew its request for a review of all five companies named above.[4] On June 3, 2014, the petitioner timely withdrew its request for a review of Agro Dutch, Hindustan, Transchem and Weikfield.[5]

Partial Rescission of Review

Pursuant to 19 CFR 351.213(d)(1), the Department will rescind an administrative review, in whole or in part, if the parties that requested a review withdraw the request within 90 days of the date of publication of notice of initiation of the requested review. The petitioner's and Sunny Dell's withdrawal requests were filed before the 90-day deadline. Therefore, in response to the withdrawals of request for review of Agro Dutch, Hindustan, Transchem and Weikfield, and pursuant to 19 CFR 351.213(d)(1), we are rescinding this review with regard to these companies. However, because the petitioner did not withdraw its request for review of Himalya, the instant review will continue with respect to this company.

Assessment

The Department will instruct U.S. Customs and Border Protection (CBP) to assess antidumping duties on all appropriate entries. For the companies for which this review is rescinded, antidumping duties shall be assessed at rates equal to the cash deposit of estimated antidumping duties required at the time of entry, or withdrawal from warehouse, for consumption, in accordance with 19 CFR 351.212(c)(1)(i). The Department intends to issue appropriate assessment instructions directly to CBP 15 days after the date of publication of this notice in the **Federal Register**.

Notification to Importers

This notice serves as the only reminder to importers of their responsibility, under 19 CFR 351.402(f)(2), to file a certificate regarding the reimbursement of antidumping duties prior to liquidation of the relevant entries during this review period. Failure to comply with this requirement may result in the presumption that reimbursement of antidumping duties occurred and the subsequent assessment of double antidumping duties.

Notification Regarding Administrative Protective Order

This notice serves as the only reminder to parties subject to administrative protective order (APO) of their responsibility concerning the disposition of proprietary information disclosed under APO in accordance with 19 CFR 351.305(a)(3). Timely written notification of return/destruction of APO materials or conversion to judicial protective order is hereby requested. Failure to comply with the regulations and the terms of an APO is a sanctionable violation.

This notice is published in accordance with section 751 of the Act and 19 CFR 351.213(d)(4).

Dated: June 24, 2014.

Christian Marsh,

Deputy Assistant Secretary, for Antidumping and Countervailing Duty Operations.

[FR Doc. 2014–15278 Filed 6–27–14; 8:45 am]

BILLING CODE 3510–DS–P

[1] *See Antidumping or Countervailing Duty Order, Finding, or Suspended Investigation; Opportunity to Request Administrative Review,* 79 FR 6159 (February 3, 2014).

[2] *See Initiation of Antidumping Duty Administrative Reviews and Request for Revocation in Part,* 79 FR 18262 (April 1, 2014).

[3] *See* Letter from Weikfield to the Department, dated April 11, 2014.

[4] *See* Letter from Sunny Dell, ''Certain Preserved Mushrooms from India: Withdrawal of Requests for Administrative Reviews,'' dated May 21, 2014.

[5] *See* Letter from Petitioner, ''15th Administrative Review of the Antidumping Duty Order on Certain Preserved Mushrooms from India: Petitioner's Partial Withdrawal of Requests for Administrative Reviews,'' dated June 3, 2014.

DEPARTMENT OF COMMERCE

International Trade Administration

[A–570–831]

Fresh Garlic From the People's Republic of China: Final Results and Partial Rescission of the 18th Antidumping Duty Administrative Review; 2011–2012

AGENCY: Enforcement and Compliance, International Trade Administration, Department of Commerce.

SUMMARY: On December 24, 2013, the Department of Commerce (the Department) published its preliminary results of the 2011–2012 administrative review of the antidumping duty order on fresh garlic from the People's Republic of China (PRC).[1] This review covers 139 companies. The mandatory respondents in this review are: Hebei Golden Bird Trading Co., Ltd. (Golden Bird) and Shenzhen Xinboda Industrial Co. Ltd. (Xinboda). Following the *Preliminary Results,* we invited interested parties to comment. Based on our analysis of the comments received, we made changes to the margin calculations for these final results of the antidumping duty administrative review.

As discussed below, the Department is relying on total adverse facts available (AFA) with respect to Golden Bird, who failed to cooperate to the best of its ability in this administrative review. The Department is also rescinding the review with respect to Shijiazhuang Goodman Trading Co., Ltd. (Goodman), who was determined not to have any *bona fide* sales. These determinations and the final dumping margins are discussed below in the ''Final Results'' section of this notice.

DATES: *Effective Date:* June 30, 2014

FOR FURTHER INFORMATION CONTACT: Brandon Steele, Milton Koch, and Hilary E. Sadler, Esq., AD/CVD Operations, Office VII, Enforcement and Compliance, International Trade Administration, U.S. Department of Commerce, 14th Street and Constitution Avenue NW., Washington, DC 20230;

[1] *See Fresh Garlic From the People's Republic of China: Preliminary Results and Partial Rescission of the 18th Antidumping Duty Administrative Review; 2011–2012,* 78 FR 77653 (December 24, 2013) (*Preliminary Results*).

telephone: (202) 482–4956, (202) 482–2584, and (202) 482–4340, respectively.

Background

On December 24, 2013, the Department published the preliminary results of this administrative review.[2] In the preliminary results, we rescinded this administrative review for two companies: Jinxiang Jinma Fruits Vegetables Products Co., Ltd. and Zhengzhou Harmoni Spice Co., Ltd. On January 23, 2014, Xinboda, Golden Bird, and the petitioners requested a hearing.[3] Between January 27, 2014, and February 6, 2014, interested parties submitted surrogate value data for consideration in the final results. On April 8, 2014, the petitioners submitted new factual information along with an allegation that Golden Bird had misreported its sales of subject merchandise to the United States during the period of review (POR). From April 14 through April 18, 2014, the Department conducted a verification of Xinboda and its producer Zhengzhou Dadi Garlic Industry Co., Ltd. in Shenzhen, PRC. Between April 16, 2014, and April 28, 2014, Golden Bird responded to the petitioners' April 8, 2014, allegations and the petitioners provided a response to Golden Bird. On April 24, 2014, the Department held an *ex parte* meeting with the petitioners to discuss their allegations against Golden Bird. On May 7, 2014, the Department sent Golden Bird a supplemental questionnaire seeking to confirm the accuracy of the sales information reported by Golden Bird. On May 14, 2014, the petitioners, Golden Bird, Jinxiang Hejia Co., Ltd (Hejia), and Xinboda submitted case briefs. On May 19 and May 23, 2014, the Department held *ex parte* meetings with Golden Bird regarding Golden Bird's request for an extension to file a response to the May 7, 2014, supplemental questionnaire. On May 22, 2014, the parties submitted their rebuttal briefs. Golden Bird responded to the May 7th questionnaire on May 23, 2014. On May 27, 2014, the petitioners submitted their rebuttal briefs. On June 9, 2014, the petitioners submitted a supplemental brief regarding their allegations against Golden Bird. On June 12, 2014, Golden Bird submitted a rebuttal brief regarding the petitioners' allegations. On June 18, 2014, the Department held a public hearing.

Scope of the Order

The products subject to this antidumping duty order are all grades of garlic, whole or separated into constituent cloves, whether or not peeled, fresh, chilled, frozen, provisionally preserved, or packed in water or other neutral substance, but not prepared or preserved by the addition of other ingredients or heat processing. Fresh garlic that are subject to the order are currently classified under the Harmonized Tariff Schedule of the United States (HTSUS) 0703.20.0010, 0703.200020, 0703.20.0090, 0710.80.7060, 0710.80.9750, 0711.90.6000, and 2005.90.9700. Although the HTSUS numbers are provided for convenience and customs purposes, the written product description remains dispositive. A full description of the scope of the order is contained in the Issues and Decision memorandum dated concurrently with and hereby adopted by this notice. [4]

Analysis of Comments Received

All issues raised in the case and rebuttal briefs are addressed in the Issues and Decision Memorandum, which is dated concurrently and is hereby adopted by this notice. A list of the issues that are raised in the briefs and addressed in the Issues and Decision Memorandum is in Appendix III of this notice. The Issues and Decision Memorandum is a public document and is made available to the public via Enforcement and Compliance's Antidumping and Countervailing Duty Centralized Electronic Service System (IA ACCESS). IA ACCESS is available to registered users at *https://iaaccess.trade.gov,* and is available to all parties in the Department's Central Records Unit, located in room 7046 of the main Department of Commerce building. In addition, a complete version of the Issues and Decision Memorandum can be found at *http://enforcement.trade.gov/frn/.* The signed and the electronic versions of the Issues and Decision Memorandum are identical in content.

Application of Adverse Facts Available

After the *Preliminary Results,* the Department requested that Golden Bird provide the Department with export documentation to corroborate Golden Bird's reported volume of U.S. sales found in its Section A response and in its U.S. sales database. Golden Bird was unable to produce documents to corroborate its Section A submission or its U.S. sales database. Therefore, based upon the post-preliminary results questionnaire responses, case briefs, and rebuttal briefs, the Department determines that it cannot rely on Golden Bird's questionnaire responses, including Section A which contains information with respect to Golden Bird's claim for separate rate status. As such, for purposes of these final results, we are treating Golden Bird as part of the PRC-wide entity. Because the PRC-wide entity, which includes Golden Bird, submitted unreliable information and failed to cooperate to the best of its ability, we determine the application of AFA is appropriate.[5] Consistent with our practice, the Department relied upon the highest rate on the record of any segment of the proceeding, *i.e.,* $4.71 per kilogram. The Department also corroborated that rate pursuant to section 776(c) of the Tariff Act of 1930, as amended (the Act).

Corroboration of Secondary Information Used as Adverse Facts Available

Section 776(c) of the Act provides that, where the Department selects from among the facts otherwise available and relies on ''secondary information,'' the Department shall, to the extent practicable, corroborate that information from independent sources reasonably at the Department's disposal. Secondary information is described in the SAA as ''information derived from the petition that gave rise to the investigation or review, the final determination covering the subject merchandise, or any previous review under section 751 concerning the subject merchandise.'' [6] The SAA states that ''corroborate meant to determine that the information used has probative value.'' [7] The Department determines that to have probative value, information must be reliable and relevant.[8] The SAA also states that

[2] *Id.*

[3] The petitioners in this review are the Fresh Garlic Producers Association and its individual members: Christopher Ranch L.L.C., The Garlic Company, Valley Garlic, and Vessey and Company, Inc.

[4] *See* Memorandum from Christian Marsh, Deputy Assistant Secretary for Antidumping and Countervailing Duty Operations, to Paul Piquado, Assistant Secretary for Enforcement and Compliance, regarding ''Issues and Decision Memorandum for the Final Results of 2011–2012 Antidumping Duty Administrative Review of fresh garlic from the People's Republic of China,'' issued concurrently with this notice (Issues and Decision Memorandum).

[5] *See* Issues and Decision Memorandum at Comment 16; *see also* sections 776(a)(2) and 776(b) of the Act.

[6] *See* Statement of Administrative Action accompanying the Uruguay Round Agreements Act, H.R. Doc. No. 103–316, vol. 1 (1994) (SAA) at 870.

[7] *Id.*

[8] *See, e.g., Tapered Roller Bearings and Parts Thereof, Finished and Unfinished, From Japan, and Tapered Roller Bearings Four Inches or Less in Outside Diameter, and Components Thereof, From Japan; Preliminary Results of Antidumping Duty Administrative Reviews and Partial Termination of Administrative Reviews,* 61 FR 57391, 57392 (November 6, 1996) (unchanged in final results).

independent sources used to corroborate such evidence may include, for example, published price lists, official import statistics and customs data, and information obtained from interested parties during the particular investigation or review.[9]

To be considered corroborated, information must be found both reliable and relevant. As described in the Issues and Decision Memorandum, this AFA rate is both reliable and relevant. Therefore, we determine that it has probative value, and is thus in accordance with the requirement, under section 776(c) of the Act, that secondary information be corroborated to the extent practicable.

Final Determination of No Shipments

Based upon a review of arguments made by Hejia in its case brief, the Department determines that Hejia had no reviewable transactions of subject merchandise during the POR.[10] For these final results, the Department finds that the fourteen companies listed in Appendix I, including Hejia, had no shipments during the POR.[11]

Withdrawal of Review Requests, Partial Rescission of the Administrative Review, and the PRC-Wide Entity

As noted in the *Preliminary Results,* the Department is rescinding this review for Jinxiang Jinma Fruits Vegetables Products Co., Ltd. and Zhengzhou Harmoni Spice Co., Ltd. because: (1) Parties have timely withdrawn all review requests with respect to these companies; and, (2) these companies have separate rates from a prior completed segment of this proceeding. For these companies, antidumping duties shall be assessed at the rate entered.

Also as noted in the *Preliminary Results,* the Department received timely withdrawal requests for 94 other companies. These companies do not have a separate rate, and, therefore, each currently remains part of the PRC-wide entity,[12] which is subject to this administrative review. For these companies, antidumping duties shall be assessed at the PRC-wide entity rate indicated below.

Of the remaining companies subject to these results, 20 are not eligible for a separate rate as they did not submit separate rate applications or certifications or were not subject to a withdrawal request.[13] As a result, the Department determines that these 20 companies are part of the PRC-wide entity.

In addition, the Department determines that Shijiazhuang Goodman Trading Co., Ltd.'s (Goodman) sales were not *bona fide* and rescinded its new shipper review. Because the sales subject to this review are the same sales found to be non-*bona fide* in the new shipper review, the Department is rescinding this administrative review with respect to Goodman. For our determination with respect to Goodman, please refer to the Issues and Decision Memorandum.

Final Results of the Administrative Review

The Department determines that the following weighted-average dumping margins exist for the POR:

Exporter	Weighted average margin (dollars per kilogram)
Shenzhen Xinboda Industrial Co., Ltd	$1.82
Qingdao Xintianfeng Foods Co., Ltd	1.82
Shenzhen Bainong Co., Ltd	1.82
Chegwu County Yuanxiang Industry & Commerce Co, Ltd	1.82
Yantai Jinyan Trading, Inc	1.82
Jinxiang Merry Vegetable Co., Ltd	1.82
Cangshan Qingshui Vegetable Foods Co., Ltd	1.82
Jining Yifa Garlic Produce Co., Ltd	1.82
Jinan Farmlady Trading Co., Ltd	1.82
Weifang Hongqiao International Logistics Co., Ltd	1.82
Rate Applicable to the Remaining Companies Under Review	1.82
PRC-Wide Rate (which includes Hebei Golden Bird Trading Co., Ltd)	4.71

Disclosure

We will disclose the calculations to parties in this proceeding within five days after the date of issuance of this notice in the **Federal Register** in accordance with 19 CFR 351.224(b).

Assessment Rates

The Department will determine, and U.S. Customs and Border Protection (CBP) shall assess, antidumping duties on all appropriate entries covered by this review. The Department intends to issue assessment instructions to CBP 15 days after the publication date of these final results of review.[14] In accordance with 19 CFR 351.212(b)(1), for Xinboda, we are calculating importer- (or customer-) specific assessment rates for the merchandise subject to this review. For any individually examined respondent whose weighted-average dumping margin is above *de minimis* (*i.e.,* 0.50 percent), the Department will calculate importer-specific assessment rates on the basis of the ratio of the total amount of dumping calculated for the importer's examined sales and the total entered value of sales.[15] We will instruct CBP to assess antidumping duties on all appropriate entries covered by this review when the importer-specific assessment rate is above *de minimis.* Where either the respondent's weighted-average dumping margin is zero or *de minimis,* or an importer-specific assessment rate is zero or *de minimis,* we will instruct CBP to liquidate the appropriate entries without regard to antidumping duties.

For Golden Bird, entries will be assessed at the rate indicated above.

For the separate rate companies not selected for individual examination, we will instruct CBP to apply the rate listed above to entries of subject merchandise exported by such companies and entered during the period of review. This rate is the same as the rate for the one mandatory respondent with a weighted-average dumping margin determined without using the facts otherwise available.

For the PRC-wide entity, entries will be assessed at the PRC-wide rate indicated above.

The Department recently announced a refinement to its assessment practice in NME cases.[16] Pursuant to this refinement in practice, for entries that were not reported in the U.S. sales databases submitted by companies

[9] *See* SAA at 870; *see also Notice of Preliminary Determination of Sales at Less Than Fair Value: High and Ultra-High Voltage Ceramic Station Post Insulators From Japan,* 68 FR 35627, 35629 (June 16, 2003) (unchanged in final determination); and *Notice of Final Determination of Sales at Less Than Fair Value: Live Swine From Canada,* 70 FR 12181, 12183 (March 11, 2005).

[10] *See* Issues and Decision Memorandum at Comment 17.

[11] *See Preliminary Results,* 77 FR at 77654.

[12] These 94 companies are included in the PRC-wide entity list at Appendix II.

[13] *See* Appendix II.

[14] We note that Goodman's entries are currently covered by a preliminary injunction in connection with the litigation concerning the new shipper review. *See Shijiazhuang Goodman Trading Co. v. United States,* CIT No. 14–00101. Therefore, these entries shall not be liquidated until the preliminary injunction is lifted.

[15] *See Antidumping Proceedings: Calculation of the Weighted-Average Dumping Margin and Assessment Rate in Certain Antidumping Proceedings: Final Modification,* 77 FR 8101 (February 14, 2012).

[16] *See Non-Market Economy Antidumping Proceedings: Assessment of Antidumping Duties,* 76 FR 65694 (October 24, 2011).

individually examined during this review, but that entered under the case number of that exporter (*i.e.,* at the individually-examined exporter's cash deposit rate), the Department will instruct CBP to liquidate such entries at the PRC-wide rate. In addition, if the Department determines that an exporter under review had no shipments of the subject merchandise, any suspended entries that entered under that exporter's case number (*i.e.,* at that exporter's rate) will be liquidated at the PRC-wide rate.[17]

Cash Deposit Requirements

The following cash deposit requirements will be effective upon publication of the final results of this review for shipments of the subject merchandise from the PRC entered, or withdrawn from warehouse, for consumption on or after the publication date, as provided by section 751(a)(2)(C) of the Act: (1) For the companies listed above, the cash deposit rate will be the weighted-average dumping margins indicated above (except, if the rate is zero or *de minimis,* then zero cash deposit will be required); (2) for previously investigated or reviewed PRC and non-PRC exporters not listed above that received a separate rate in a prior segment of this proceeding, the cash deposit rate will continue to be the exporter-specific rate published for the most recent period; (3) for all PRC exporters of subject merchandise that have not been found to be entitled to a separate rate, the cash deposit rate will be the PRC-wide rate of $4.71 per kilogram; and (4) for all non-PRC exporters of subject merchandise which have not received their own rate, the cash deposit rate will be the rate applicable to the PRC exporter that supplied that non-PRC exporter.

These deposit requirements, when imposed, shall remain in effect until further notice.

Notification to Importers

This notice serves as final reminder to importers of their responsibility under 19 CFR 351.402(f)(2) to file a certificate regarding the reimbursement of antidumping duties prior to liquidation of the relevant entries during this review period. Failure to comply with this requirement could result in the Secretary of Commerce's presumption that reimbursement of antidumping duties occurred and the subsequent assessment of double antidumping duties.

[17] *Id.*

Return or Destruction of Proprietary Information

This notice serves as a reminder to parties subject to the administrative protective order (APO) of their responsibility concerning the disposition of proprietary information disclosed under the APO in accordance with 19 CFR 351.305(a)(3). We request timely written notification of return or destruction of APO materials, or conversion to judicial protective order. Failure to comply with the regulations and the terms of an APO is a sanctionable violation.

The Department issues and publishes this notice in accordance with sections 751(a)(1) and 777(i) of the Act, and 19 CFR 351.213.

Dated: June 23, 2014.

Paul Piquado,

Assistant Secretary for Enforcement and Compliance.

Appendix I

Companies That Have Certified No Shipments

1. Jinxiang Chengda Imp. & Exp. Co., Ltd.
2. Foshan Fuyi Food Co., Ltd.
3. Heze Ever-Best International Trade Co., Ltd.
4. Zhengzhou Huachao Industrial, Co., Ltd.
5. Qingdao Maycarrier Import & Export Co., Ltd.
6. Jinxiang Merry Vegetable Co., Ltd.
7. Cangshan Qingshui Vegetable Foods Co., Ltd.
8. Qingdao Tiantaixing Foods Co., Ltd.
9. Qingdao Sea-line International Trading Co.
10. XuZhou Simple Garlic Industry Co., Ltd.
11. Jining Yongjia Trade Co. Ltd.
12. Jinxiang Yuanxin Imp. & Exp. Co., Ltd.
13. Shandong Jinxiang Zhengyang Import & Export Co. Ltd.
14. Jinxiang Hejia Co., Ltd.

Appendix II

List of Companies Subject to the PRC-Wide Rate

1. American Pioneer Shipping
2. Anhui Dongqian Foods Ltd.
3. Anqiu Friend Food Co., Ltd.
4. Anqiu Haoshun Trade Co., Ltd.
5. APM Global Logistics (Shanghai) Co., Ltd.
6. APS Qingdao
7. Chiping Shengkang Foodstuff Co., Ltd.
8. CMEC Engineering Machinery Import & Export Co., Ltd.
9. Dongying Shunyifa Chemical Co., Ltd.
10. Dynalink Systems Logistics (Qingdao) Inc.
11. Eimskip Logistics Inc.
12. Feicheng Acid Chemicals Co., Ltd.
13. Frog World Co., Ltd.
14. Golden Bridge International, Inc.
15. Guangxi Lin Si Fu Bang Trade Co., Ltd
16. Hangzhou Guanyu Foods Co., Ltd.
17. Hebei Golden Bird Trading Co., Ltd.
18. Henan Weite Industrial Co., Ltd.
19. Hongqiao International Logistics Co.
20. Intecs Logistics Service Co., Ltd.
21. IT Logistics Qingdao Branch
22. Jinan Solar Summit International Co., Ltd.
23. Jinan Yipin Corporation Ltd.
24. Jining De-Rain Trading Co., Ltd.
25. Jining Highton Trading Co., Ltd.
26. Jining Jiulong International Trading Co., Ltd.
27. Jining Tiankuang Trade Co., Ltd.
28. Jining Trans-High Trading Co., Ltd.
29. Jinxiang County Huaguang Food Import & Export Co., Ltd.
30. Jinxiang Dacheng Food Co., Ltd.
31. Jinxiang Dongyun Freezing Storage Co., Ltd. (a/k/a Jinxiang Eastward Shipping Import and Export Limited Company)
32. Jinxiang Dongyun Import & Export Co., Ltd.
33. Jinxiang Fengsheng Import & Export Co., Ltd.
34. Jinxiang Grand Agricultural Co., Ltd.
35. Jinxiang Infarm Fruits & Vegetables Co., Ltd.
36. Jinxiang Meihua Garlic Produce Co., Ltd.
37. Jinxiang Shanyang Freezing Storage Co., Ltd.
38. Jinxiang Shenglong Trade Co., Ltd.
39. Jinxiang Tianheng Trade Co., Ltd.
40. Jinxiang Tianma Freezing Storage Co., Ltd.
41. Jinxiang Xian Baishite Trade Co., Ltd. (a/k/a Jinxiang Best Trade Co., Ltd.)
42. Juye Homestead Fruits and Vegetables Co., Ltd.
43. Kingwin Industrial Co., Ltd.
44. Laiwu Fukai Foodstuff Co., Ltd.
45. Laizhou Xubin Fruits and Vegetables
46. Linshu Dading Private Agricultural Products Co., Ltd.
47. Linyi City Hedong District Jiuli Foodstuff Co.
48. Linyi City Kangfa Foodstuff Drinkable Co., Ltd.
49. Linyi Katayama Foodstuffs Co., Ltd.
50. Linyi Tianqin Foodstuff Co., Ltd.
51. Ningjin Ruifeng Foodstuff Co., Ltd.
52. Qingdao Apex Shipping Co., Ltd.
53. Qingdao BNP Co., Ltd.
54. Qingdao Cherry Leather Garment Co., Ltd.
55. Qingdao Chongzhi International Transportation Co., Ltd.
56. Qingdao Everfresh Trading Co., Ltd.
57. Qingdao Liang He International Trade Co., Ltd
58. Qingdao Lianghe International Trade Co., Ltd.
59. Qingdao Saturn International Trade Co., Ltd.
60. Qingdao Sino-World International Trading Co., Ltd.
61. Qingdao Winner Foods Co., Ltd.
62. Qingdao XinTian Feng Food Co., Ltd.
63. Qingdao Yuankang International
64. Qufu Dongbao Import & Export Trade Co., Ltd.
65. Rizhao Huasai Foodstuff Co., Ltd.
66. Samyoung America (Shanghai) Inc.
67. Shandong Chengshun Farm Produce Trading Co., Ltd.
68. Shandong Chenhe Intl Trading Co., Ltd.
69. Shandong China Bridge Imports
70. Shandong Dongsheng Eastsun Foods Co., Ltd.
71. Shandong Garlic Company
72. Shandong Longtai Fruits and Vegetables Co., Ltd.

73. Shandong Sanxing Food Co., Ltd.
74. Shandong Wonderland Organic Food Co., Ltd.
75. Shandong Xingda Foodstuffs Group Co., Ltd.
76. Shandong Yipin Agro (Group) Co., Ltd.
77. Shanghai Ever Rich Trade Company
78. Shanghai Goldenbridge International Co., Ltd.
79. Shanghai Great Harvest International Co., Ltd.
80. Shanghai LJ International Trading Co., Ltd.
81. Shanghai Medicines & Health Products Import/Export Co., Ltd.
82. Shanghai Yijia International Transportation Co., Ltd.
83. Shenzhen Fanhui Import & Export Co., Ltd.
84. Shenzhen Greening Trading Co., Ltd.
85. Shenzhen Xunong Trade Co., Ltd.
86. Shijiazhuang Goodman Trading Co., Ltd.
87. Sunny Import & Export Limited
88. T&S International, LLC.
89. Taian Eastsun Foods Co., Ltd.
90. Taian Fook Huat Tong Kee Pte. Ltd.
91. Taian Solar Summit Food Co., Ltd.
92. Taiyan Ziyang Food Co., Ltd.
93. Tianjin Spiceshi Co., Ltd.
94. U.S. United Logistics (Ningbo) Inc.
95. V.T. Impex (Shandong) Limited
96. Weifang Chenglong Import & Export Co., Ltd.
97. Weifang He Lu Food Import & Export Co., Ltd.
98. Weifang Hong Qiao International Logistics Co., Ltd.
99. Weifang Jinbao Agricultural Equipment Co., Ltd.
100. Weifang Naike Foodstuffs Co., Ltd.
101. Weifang Shennong Foodstuff Co., Ltd.
102. Weihai Textile Group Import & Export Co., Ltd.
103. WSSF Corporation (Weifang)
104. Xiamen Huamin Import Export Company
105. Xiamen Keep Top Imp. and Exp. Co., Ltd.
106. Xinjiang Top Agricultural Products Co., Ltd.
107. XuZhou Heiners Agricultural Co., Ltd.
108. Yishui Hengshun Food Co., Ltd.
109. You Shi Li International Trading Co., Ltd.
110. Zhangzhou Xiangcheng Rainbow Greenland Food Co., Ltd.
111. Zhengzhou Dadi Garlic Industry Co., Ltd.
112. Zhengzhou Xiwannian Food Co., Ltd.
113. Zhengzhou Xuri Import & Export Co., Ltd.
114. Zhengzhou Yuanli Trading Co., Ltd.
115. Zhong Lian Farming Product (Qingdao) Co., Ltd.

Appendix III

List of Topics Discussed in the Issues and Decision Memorandum

Summary
Background
Scope of the Order
Discussion of the Issues
Comment 1: Selection of the Surrogate Country
Comment 2: Use of MERALCO to Calculate Electricity Rates
Comment 3: Excluding NME Country Data in Import Statistics
Comment 4: Excluding Data from Countries With Export Subsidies
Comment 5: Excluding Outlier (Aberrational) Data Using Statistical Tools
Comment 6: Deducting Transportation Costs
Comment 7: Adjusting Brokerage and Handling Fees in CIF
Comment 8: Adjusting the Philippine ILO 6A Labor Calculation
Comment 9: Deducting Export Letter of Credit Fees
Comment 10: Adjusting SVs to Reflect Net kg
Comment 11: Using CIF Values Instead of FOB Values
Comment 12: Wholesale versus Farm Gate Prices
Comment 13: Differential Pricing Methodology Challenge
Comment 14: Country Wide Rate Challenge
Comment 15: 15-Day Liquidation Instruction Policy Challenge
Comment 16: Fraud Allegation Concerning Golden Bird's Export Declarations to GACC
Comment 17: Hejia Ministerial Error, Certification of No Shipments
Comment 18: Separate Rate Request for Goodman
Comment 19: Weighted Average Margin Calculation for Goodman
Comment 20: Contemporaneous Calculation of SVs for Goodman
Comment 21: Separate Briefing Schedule for Golden Bird's SQR Recommendation

[FR Doc. 2014–15279 Filed 6–27–14; 8:45 am]
BILLING CODE 3510–DS–P

DEPARTMENT OF COMMERCE

National Institute of Standards and Technology

Proposed Information Collection; Comment Request; Small Business Innovation Research (SBIR) Program Application Cover Sheet

AGENCY: National Institute of Standards and Technology, Commerce.

ACTION: Notice.

SUMMARY: The Department of Commerce, as part of its continuing effort to reduce paperwork and respondent burden, invites the general public and other Federal agencies to take this opportunity to comment on proposed and/or continuing information collections, as required by the Paperwork Reduction Act of 1995.

DATES: Written comments must be submitted on or before August 29, 2014.

ADDRESSES: Direct all written comments to Jennifer Jessup, Departmental Paperwork Clearance Officer, Department of Commerce, Room 6616, 14th and Constitution Avenue NW., Washington, DC 20230 (or via the Internet at *JJessup@doc.gov*).

FOR FURTHER INFORMATION CONTACT: Requests for additional information or copies of the information collection instrument and instructions should be directed to Mary Clague, NIST SBIR Program Office, 100 Bureau Drive, MS 2200, Gaithersburg, MD 20899, 301–975–4188, *mary.clague@nist.gov*.

SUPPLEMENTARY INFORMATION:

I. Abstract

The SBIR program was originally established in 1982 by the Small Business Innovation Development Act (Pub. L. 97–219), codified at 15 U.S.C. 638. It was then expanded and extended by the Small Business Research and Development (R&D) Enhancement Act of 1992 (Pub. L. 102–564), and received subsequent reauthorization and extensions that include Public Law 112–81, extending SBIR through September 30, 2017. The US Small Business Administration (SBA) serves as the coordinating agency for the SBIR program. It directs the agency implementation of SBIR, reviews progress, and reports annually to Congress on its operation.

The NIST SBIR Cover Sheet is the first page of each application that responds to the annual NIST SBIR Federal Funding Opportunity (FFO). The information collected in the Cover Sheet provides identifying information and demographic data for use in NIST's annual report to the SBA on the program.

II. Method of Collection

The information will be collected as part of the application process and will be submitted either through grants.gov or by paper.

III. Data

OMB Control Number: 0693–XXXX.
Form Number(s): None.
Type of Review: Regular submission (new information collection).
Affected Public: Business or other for-profit organizations.
Estimated Number of Respondents: 100.
Estimated Time Per Response: .5 hours.
Estimated Total Annual Burden Hours: 50.
Estimated Total Annual Cost to Public: $0.

IV. Request for Comments

Comments are invited on: (a) Whether the proposed collection of information is necessary for the proper performance of the functions of the agency, including whether the information shall have practical utility; (b) the accuracy of the agency's estimate of the burden

(including hours and cost) of the proposed collection of information; (c) ways to enhance the quality, utility, and clarity of the information to be collected; and (d) ways to minimize the burden of the collection of information on respondents, including through the use of automated collection techniques or other forms of information technology.

Comments submitted in response to this notice will be summarized and/or included in the request for OMB approval of this information collection; they also will become a matter of public record.

Dated: June 24, 2014.

Gwellnar Banks,

Management Analyst, Office of the Chief Information Officer.

[FR Doc. 2014–15207 Filed 6–27–14; 8:45 am]

BILLING CODE 3510–13–P

DEPARTMENT OF COMMERCE

National Oceanic and Atmospheric Administration

RIN 0648–XD353

Permits; Foreign Fishing

AGENCY: National Marine Fisheries Service (NMFS), National Oceanic and Atmospheric Administration (NOAA), Commerce.

ACTION: Notice of application for permit; request for comments.

SUMMARY: NMFS publishes for public review and comment information regarding a permit application for transshipment of Atlantic herring by Canadian vessels, submitted under provisions of the Magnuson-Stevens Fishery Conservation and Management Act (Magnuson-Stevens Act). This action is necessary for NMFS to make a determination that the permit application can be approved.

DATES: Written comments must be received by July 14, 2014.

ADDRESSES: Written comments on this action, identified by RIN 0648–XD353, should be sent to Mark Wildman in the NMFS Office of International Affairs at 1315 East-West Highway, Silver Spring, MD 20910 (phone: (301) 427–8386, fax: (301) 713–2313, email: *mark.wildman@noaa.gov*).

FOR FURTHER INFORMATION CONTACT: Mark Wildman at (301) 427–8386 or by email at *mark.wildman@noaa.gov.*

SUPPLEMENTARY INFORMATION:

Background

Section 204(d) of the Magnuson-Stevens Act (16 U.S.C. 1824(d)) authorizes the Secretary of Commerce (Secretary) to issue a transshipment permit authorizing a vessel other than a vessel of the United States to engage in fishing consisting solely of transporting fish or fish products at sea from a point within the United States Exclusive Economic Zone (EEZ) or, with the concurrence of a state, within the boundaries of that state, to a point outside the United States. In addition, Public Law 104–297, section 105(e), directs the Secretary to issue section 204(d) permits for up to 14 Canadian transport vessels to receive Atlantic herring harvested by United States fishermen and to be used in sardine processing. Transshipment must occur from within the boundaries of the State of Maine or within the portion of the EEZ east of the line 69 degrees 30 minutes west and within 12 nautical miles from Maine's seaward boundary.

Section 204(d)(3)(D) of the Magnuson-Stevens Act provides that an application may not be approved until the Secretary determines that ''no owner or operator of a vessel of the United States which has adequate capacity to perform the transportation for which the application is submitted has indicated . . . an interest in performing the transportation at fair and reasonable rates.'' NMFS is publishing this notice as part of its effort to make such a determination with respect to the application described below.

Summary of Application

NMFS received an application requesting authorization for five Canadian transport vessels to receive transfers of herring from United States purse seine vessels, stop seines, and weirs for the purpose of transporting the herring to Canada for processing. The transshipment operations will occur within the boundaries of the State of Maine or within the portion of the EEZ east of the line 69°30′ W longitude and within 12 nautical miles from Maine's seaward boundary.

Dated: June 24, 2014.

Jean-Pierre Plé,

Acting Director, Office of International Affairs, National Marine Fisheries Service.

[FR Doc. 2014–15266 Filed 6–27–14; 8:45 am]

BILLING CODE 3510–22–P

DEPARTMENT OF COMMERCE

National Oceanic and Atmospheric Administration

RIN 0648–XD124

National Environmental Policy Act Compliance for Council-Initiated Fishery Management Actions Under the Magnuson-Stevens Act

AGENCY: National Marine Fisheries Service (NMFS), National Oceanic and Atmospheric Administration (NOAA), Commerce.

ACTION: Notice of availability of draft revised and updated National Environmental Policy Act (NEPA) procedures for Magnuson-Stevens Act fishery management actions; request for comments.

SUMMARY: The purpose of this notice is to notify the public that on February 19, 2013, NMFS issued an internal policy pertaining to complying with NEPA in the context of Magnuson-Stevens Act (MSA) fishery management actions. This policy, entitled ''National Environmental Policy Act Compliance for Council-Initiated Fishery Management Actions under the Magnuson-Stevens Act'' (the policy) clarifies roles and responsibilities of NMFS and the Regional Fishery Management Councils (Council or FMCs), explains timing and procedural linkages, provides guidance on documentation needs, and fosters partnerships and cooperation between NMFS and FMCs on NEPA compliance.

NMFS consulted with the Councils and with the Council on Environmental Quality (CEQ) on proposed revisions to the 2013 NMFS NEPA policy directive, and based on those consultations NMFS now proposes to use this policy as a basis for issuing revised and updated NEPA procedures for MSA actions in the form of a line-office supplement to NOAA Administrative Order (NAO) 216–6.

DATES: NMFS will accept written comments on the draft revised NEPA procedures until September 29, 2014.

ADDRESSES: You may submit comments on this document, identified by NOAA–NMFS–2014–0024, by any of the following methods:

•*Electronic Submission:* Submit all electronic public comments via the Federal e-Rulemaking Portal. Go to *www.regulations.gov/#!docketDetail;D=NOAA-NMFS-2014-0024,* click the ''Comment Now!'' icon, complete the required fields, and enter or attach your comments.

•*Mail:* Submit written comments to Steve Leathery, NMFS NEPA

Coordinator, Room 10828, 1315 East-West Highway, Silver Spring MD 21755.

Instructions: Comments sent by any other method, to any other address or individual, or received after the end of the comment period, may not be considered by NMFS. All comments received are a part of the public record and will generally be posted for public viewing on *www.regulations.gov* without change. All personal identifying information (e.g., name, address, etc.), confidential business information, or otherwise sensitive information submitted voluntarily by the sender will be publicly accessible. NMFS will accept anonymous comments (enter ''N/A'' in the required fields if you wish to remain anonymous). Attachments to electronic comments will be accepted in Microsoft Word, Excel, or Adobe PDF file formats only.

FOR FURTHER INFORMATION CONTACT: Steve Leathery, 301–427–8014.

SUPPLEMENTARY INFORMATION: The 2007 Magnuson-Stevens Reauthorization Act (MSRA) required NMFS to ''revise and update'' agency procedures to comply with NEPA for fisheries management actions. In developing a proposed approach, NMFS conducted extensive public outreach which included the following:

- Consulted with the Council on Environmental Quality (CEQ) and the Councils.
- Posted Trigger Questions, developed by NMFS, and a Strawman proposal, developed by the Council Coordination Committee (CCC), for 60-day public comment.
- NMFS made presentations at meetings of all eight FMCs on Trigger Questions and Strawman during the 60-day period; NMFS received over 1600 comments.
- NMFS published proposed rule May 2008 with a 90-day comment period; conducted 3 NMFS-sponsored public hearings and a public workshop; conducted presentations at meetings of all eight FMCs; and received over 150,000 public comments.

NMFS's initial approach was to propose a rule creating new regulatory requirements aligning the decision-making processes of the Councils and NMFS under the MSA with the analytical and procedural requirements of NEPA. The proposed rule would have required Council consideration of draft NEPA documents prior to recommending fishery management measures, and NMFS consideration of a final NEPA document during Secretarial review of the measures. These comment periods could be less than 45 days each in limited circumstances, but in no case could the combined total of days be less than 45, which is the minimum comment period established by CEQ's regulations for EISs. The proposed rule would have included regulatory provisions pertaining to inadequate and incomplete information, a new categorical exclusion for exempted fishing permits, and it would have changed the name of the EIS-level NEPA compliance document for fisheries management to reflect the integration of fisheries management and environmental considerations. It also would have established a new tiering mechanism modeled on fishery management plan (FMP) ''frameworks.''

NMFS published the proposed rule on May 14, 2008, and provided for a 90-day public comment period. During the public comment period, NMFS delivered presentations at meetings of all eight Councils and conducted three NMFS-sponsored public listening sessions: one in Washington, DC metro area, one in St. Petersburg, FL, and one in Seattle, WA. In addition, NMFS, Council representatives, and CEQ held an interactive public workshop in the Washington, DC area. By the close of the public comment period, NMFS had received over 150,000 comment letters, many of which were form letters urging NMFS to withdraw the proposed rule and start over.

NMFS subsequently determined that it would be more appropriate to revise and update internal guidance rather than to create new regulatory requirements. On February 19, 2013, NMFS issued a policy titled ''National Environmental Policy Act Compliance for Council-Initiated Fishery Management Actions under the Magnuson-Stevens Act.'' This policy clarifies roles and responsibilities of NMFS and the Councils, explains timing and procedural linkages, provides guidance on documentation needs, and fosters partnerships and cooperation between NMFS and FMCs on NEPA compliance. Issuance of this policy satisfied the requirements of section 304(i) of the MSA.

After issuing the 2013 Policy Directive, NMFS consulted with the Council Coordination Committee (CCC) at its public meeting in May 2013, and also had follow-up dialog with a subcommittee the CCC established to represent the CCC on these matters. Additionally, NMFS consulted with CEQ. Based on those consultations, NMFS is now proposing to use this policy as a basis for a line-office supplement to NAO 216–6, and is publishing the draft revised and updated NEPA procedures for MSA actions to solicit public comment.

NMFS anticipates further improvements to the NEPA process at the NOAA level as a result of ongoing efforts to update NAO 216–6. NMFS will work to ensure consistency between any future NOAA-level NEPA policy and procedures and these revised and updated MSA NEPA procedures.

Key features of the draft revised and updated NEPA procedures include:

- *Roles and Responsibilities:* The draft procedures set forth the statutory roles and responsibilities for NMFS and the Councils as dictated by NEPA and the MSA. While providing clarity on ultimate responsibilities, they encourage collaboration and early integration of processes. For Atlantic Highly Migratory Species (HMS), NMFS retains responsibility over all aspects of compliance.
- *Timing:* The draft procedures encourage completing as much of the NEPA process as possible at the Council level, while recognizing the logistical demands of the fishery management process. The draft procedures establish a procedural nexus linking NEPA's requirements with MSA's. The nexus highlights the requirement for the Regional Administrator to determine a package ''complete'' to initiate MSA review; sets forth the timing requirements of the MSA and NEPA, and includes risk-based considerations for determining the NEPA schedule.
- *Documentation:* This section clarifies that the statement of purpose and need in the NEPA analysis should be linked to the fishery management need the Council is addressing. It also addresses the alternatives to be considered and what ''reasonable'' alternatives should be, and it provides guidance, derived from CEQ's 40 Most-Asked Questions, on defining the ''no action'' alternative in a fishery management context. It also specifies that, based on information in the NEPA analysis, it may be appropriate for a ROD to go beyond the question of approving or disapproving the recommendation at hand, and may include an identification of additional conservation and management needs, as appropriate.
- *Improvements/Efficiencies:* This section includes instructions for optional use of broad analyses and tiering, and incorporation by reference. It also identifies best practices for early collaboration using information technology and early communication.
- *Relationship to other Documents:* This section describes the policy's relationship to other existing documents and policies including the NMFS and Council 1997 Operational Guidelines, the NOAA NEPA Administrative Order

(NAO 216–6), and CEQ's NEPA regulations.

The draft revised and updated NEPA procedures are intended to:

- Add additional references to NEPA's requirements;
- Add additional description about Council processes;
- Add greater specificity to certain timing requirements; and
- Clarify NMFS's intent with regards to usage of NEPA documents.

Both the 2013 Policy Directive, and the draft revised and updated NEPA procedures for MSA actions are available online at *http://www.nmfs.noaa.gov/msa2007/nepa.htm.* After considering comments, NMFS intends to finalize the proposed NEPA procedures for MSA actions and to withdraw the proposed May 2008 rule.

Dated: June 24, 2014.

Emily H. Menashes,

Acting Director, Office of Sustainable Fisheries, National Marine Fisheries Service.

[FR Doc. 2014–15270 Filed 6–27–14; 8:45 am]

BILLING CODE 3510–22–P

DEPARTMENT OF COMMERCE

National Oceanic and Atmospheric Administration

RIN 0648–XD349

Atlantic Highly Migratory Species; Atlantic Bluefin Tuna Fisheries

AGENCY: National Marine Fisheries Service (NMFS), National Oceanic and Atmospheric Administration (NOAA), Commerce.

ACTION: Notice of receipt of an application for an exempted fishing permit; request for comments.

SUMMARY: NMFS has made a preliminary determination that an application for an Exempted Fishing Permit (EFP) warrants further consideration and an opportunity for public comment. The application was submitted by the owner and operator of an Atlantic tunas Purse Seine category-permitted vessel, requesting an exemption from annual incidental purse seine retention limit on the harvest of large medium Atlantic bluefin tuna (BFT) (i.e., measuring 73 to less than 81 inches curved fork length). The applicants propose that NMFS, through issuance of the EFP, assess the possibility of reducing regulatory discards related to this limit to increase the likelihood of harvesting the vessel's individual purse seine vessel BFT quota and the category subquota overall. NMFS is interested in assessing this possibility consistent with the purposes of EFPs and the associated data that could be gathered through such an EFP and requests public comment on the information provided in this notice and the application submitted.

DATES: Comments must be received by July 21, 2014.

ADDRESSES: You may submit comments on this notice, identified by 0648–XD349, by any one of the following methods:

- *Email: NMFS.PSEFP.2014@noaa.gov.*
- *Mail:* Margo Schulze-Haugen, Highly Migratory Species Management Division (F/SF1), NMFS, 1315 East-West Highway, Silver Spring, MD 20910. Please mark the outside of the envelope ''Comments on 2014 purse seine EFP application.''

FOR FURTHER INFORMATION CONTACT: A copy of the application can viewed at the following Web site: *http://www.nmfs.noaa.gov/sfa/hms/news/breaking_news.html;* or by contacting Craig Cockrell, Highly Migratory Species Management Division, NMFS, (301) 427–8503.

SUPPLEMENTARY INFORMATION: NMFS published a notice of intent to issue EFPs, Scientific Research Permits, Letters of Acknowledgement, and Chartering Permits for Atlantic highly migratory species (HMS) in 2014 (78 FR 69823, November 21, 2013). Although that notice anticipated a variety of applications, it stated that occasionally NMFS receives applications for activities that were not anticipated at the time of the general notice and that NMFS would provide additional opportunity for public comment if that were to occur.

As discussed in the November 2013 notice of intent to issue EFPs and other permits, issuance of EFPs and related permits are necessary for the collection of HMS for public display and scientific research to exempt them from specified regulations (e.g., fishing seasons, prohibited species, authorized gear, closed areas, and minimum sizes) that may otherwise prohibit such collection. Specifically, NMFS may authorize activities otherwise prohibited by the regulations at 50 CFR part 635 for the conduct of scientific research; the acquisition of information and data; the enhancement of safety at sea; the purpose of collecting animals for public education or display; the investigation of bycatch, economic or regulatory discard; or for chartering arrangements. See 50 CFR 635.32(a)(1). The terms and conditions of individual permits are unique; however, all permits include reporting requirements, limit the number and species of HMS to be collected, and only authorize collection in Federal waters of the Atlantic Ocean, Gulf of Mexico, and Caribbean Sea. EFPs and related permits are issued under the authority of the Magnuson-Stevens Fishery Conservation and Management Reauthorization Act (Magnuson-Stevens Act) (16 U.S.C. 1801 *et seq.*) and/or the Atlantic Tunas Convention Act (ATCA) (16 U.S.C. 971 *et seq.*). Regulations at 50 CFR 600.745 and 635.32 govern exempted fishing permits, as well as scientific research activity, chartering arrangements, and exempted public display and educational activities.

Current Atlantic HMS regulations specify that persons aboard a vessel permitted in the Atlantic Tunas Purse Seine category ''may retain, possess, land, or sell large medium BFT in amounts not exceeding 15 percent, by weight, of the total amount of giant BFT landed during that fishing year.'' See 50 CFR 635.23(e)(1). As a result, Purse Seine category vessels may discard large medium BFT to reduce the risk of exceeding the annual purse seine retention limit. This has the effect of focusing effort in the purse seine fishery on giant BFT but may also result in dead discards of the smaller BFT. The retention limits that apply to most commercial categories allow the retention of large medium BFT.

In the Draft Amendment 7 to the 2006 Consolidated Atlantic HMS Fishery Management Plan (2006 Consolidated HMS FMP), NMFS considered but did not further analyze the possibility of altering this limit. Although there has been past interest in altering this limit, e.g., the issue was raised in the comments on the 2006 Consolidated HMS FMP, this alternative was not considered further in the DEIS because there were few data available to determine whether such a change might be warranted or the impacts of such a change given recent low catch/landings from the Purse Seine category.

Data are now available on dead discards by size relative to retained catch for the Purse Seine category from the 2013 fishing year, reflecting dead discards for the smaller size categories. NMFS believes that additional analysis about the potential benefits of altering the limit, both by reducing dead discards and improving the Purse Seine category's opportunity to harvest its subquota, may be warranted and beneficial to the stock and the fishery. Additional data are needed to conduct such analyses and to make fishery management decisions. An EFP would allow NMFS to collect and review such additional data regarding the annual incidental purse seine retention limit by

allowing the applicant to fish for commercial sized BFT in 2014, without the limit on large medium BFT, to determine the capability of reducing regulatory discards related to this restriction and harvesting the vessel's individual quota. An EFP, if issued, would expire on December 31, 2014. Among the purposes of EFPs in the regulations (at 50 CFR 635.32(a)(1)) are ''the investigation of bycatch, economic discard and regulatory discard,'' and such an EFP would be in furtherance of those purposes.

NMFS specifically invites comment on potential terms and conditions if such an EFP were to be issued, including the following:

- *The appropriate level of observer coverage for permitted trips.* Currently, NMFS places observers on purse seine vessels via the Northeast Fishery Observer Program consistent with the HMS regulations and Recommendation 10–10 of the International Commission for the Conservation of Atlantic Tunas (Recommendation by ICCAT to Establish Minimum Standards for Fishing Vessel Observer Programs) that there be a minimum of 5 percent observer coverage of purse seine fishing effort (as measured in number of sets or trips), among other things.
- *The appropriate number of trips or tonnage that should be authorized.* Under the BFT regulations, individual Purse Seine category permitted vessels' BFT quotas may be combined and transferred for use by one vessel, the 2014 codified purse seine category quota of 171.8 mt would be the upper limit on potential retention under this EFP. All BFT catch, including dead discards and landings, would count toward this quota.
- *The appropriate timing of such trips.* Currently, the Purse Seine category opens July 15 of each year and closes December 31.
- *All BFT would be available for measurement and biological sampling or other specified research activity as appropriate.*

Analysis of Impacts to BFT

NMFS largely considers the effects of this EFP, if issued, to have been analyzed in previous analyses that considered the overall U.S. quota and subquotas as set out in the 2006 Consolidated HMS FMP and subsequent environmental analyses for the annual BFT specifications process.

Exemption from the limit on large medium BFT would provide harvest flexibility within the existing individual purse seine vessel quota(s). The exemption would affect the size of BFT that could be retained and landed, but NMFS does not expect that it would significantly alter fishing practices, given the short duration of the fishing activity, the limited number of vessels fishing, and other limits that would be placed on the EFP. The maximum amount of BFT that could be harvested would remain constrained at its upper limit to 171.8 mt, the total for the category, which could be authorized for one vessel if all individual vessel quotas were appropriately combined. NMFS does not anticipate authorizing the full category quota for harvest under this EFP but notes the maximum possible retention for the purposes of assessing potential impacts. For this quota level, the effects were analyzed within existing environmental assessment documents. Thus, activities under this EFP would not affect the total amount of BFT allowed to be harvested, limited by the ICCAT-recommended U.S. quota (which has been established consistent with ICCAT's western Atlantic BFT rebuilding program) and by the associated Purse Seine category subquota. Issuance of this EFP would not be expected to affect BFT stock health or rebuilding in ways not previously analyzed for the existing quotas and specifications. Nor would NMFS expect the size selectivity of the western Atlantic BFT fishery to change. Existing BFT management measures, including the ICCAT rebuilding program, are based on total allowable catch (in weight) and assume that the pattern of fishing mortality (e.g., fish caught at each age, also known as size selectivity of the fishery) will not change dramatically. As long as the U.S. quota is not exceeded and there is no significant change in fishery selectivity, issuance of an EFP would not be expected to have effects beyond those already analyzed.

Collection of data regarding BFT released during the permitted purse seine fishing activity could improve monitoring and accounting of BFT discards and would inform future, potential regulatory actions. All BFT mortalities resulting from this EFP would be counted against the applicant's individual Purse Seine category quota and would be within the overall, previously-analyzed quota for the category. Dead discards of all BFT less than 73 inches would be counted against the vessel's quota. No live BFT less than 73 inches would be lethally sampled during fishing operations under this EFP.

NMFS' analysis of bycatch in the purse seine fishery has found dead discards to be limited to tunas (76 FR 39019, July 5, 2011). The applicant does not anticipate interactions with protected species or marine mammals.

Final decisions on the issuance of this EFP will depend on the submission of all required information about the proposed activities, NMFS' review of public comments received on this notice, any prior violations of marine resource laws administered by NOAA, consistency with relevant NEPA documents, and any consultations with appropriate Regional Fishery Management Councils, states, or Federal agencies. NMFS does not anticipate any significant environmental impacts from the issuance of this EFP as assessed in the 1999 FMP (64 FR 29090, May 28, 1999), the 2006 Consolidated HMS FMP (71 FR 58058, October 2, 2006) and its amendments, the 2011 final rule implementing the BFT quotas and Atlantic tuna fisheries management measures (76 FR 39019, July 5, 2011), and the 2013 BFT Quota Specifications (78 FR 36685, June 19, 2013).

NMFS finds this application warrants further consideration. The agency may impose possible conditions on this EFP, if it is granted, based on consideration of public comments and further analyses. Reports on the fishing would be due at the conclusion of fishing trips, and summary a report 30 days from the expiration of the EFP, if issued, to be submitted to NMFS.

NMFS requests comments and offers a 21-day comment period on this notice, consistent with EFP regulations at 600.45. The 21-day comment period balances the need to give the public an opportunity to comment with the fact that the Purse Seine category season starts July 15 and that further delay in any EFP issuance would reduce the time available to harvest the fish as permitted, and the ability for NMFS to gather useful information about normal operations during a typical purse seine season.

Authority: 16 U.S.C. 971 *et seq.* and 1801 *et seq.*

Dated: June 25, 2014.

Alan D. Risenhoover,

Director, Office of Sustainable Fisheries, National Marine Fisheries Service.

[FR Doc. 2014–15269 Filed 6–27–14; 8:45 am]

BILLING CODE 3510–22–P

DEPARTMENT OF COMMERCE

National Oceanic and Atmospheric Administration

RIN 0648–XD210

Takes of Marine Mammals Incidental to Specified Activities; Taking Marine Mammals Incidental to a 3D Seismic Survey in Prudhoe Bay, Beaufort Sea, Alaska

AGENCY: National Marine Fisheries Service (NMFS), National Oceanic and Atmospheric Administration (NOAA), Commerce.

ACTION: Notice; issuance of an incidental harassment authorization.

SUMMARY: In accordance with the Marine Mammal Protection Act (MMPA) regulations, notice is hereby given that NMFS has issued an Incidental Harassment Authorization (IHA) to BP Exploration (Alaska) Inc. (BP) to take marine mammals, by harassment, incidental to conducting an ocean-bottom sensor seismic survey in Prudhoe Bay, Beaufort Sea, Alaska, during the 2014 open water season.

DATES: Effective July 1, 2014, through September 30, 2014.

ADDRESSES: Electronic copies of the IHA, application, and associated Environmental Assessment (EA) and Finding of No Significant Impact (FONSI) may be obtained by writing to Jolie Harrison, Supervisor, Incidental Take Program, Permits and Conservation Division, Office of Protected Resources, National Marine Fisheries Service, 1315 East-West Highway, Silver Spring, MD 20910, telephoning the contact listed below (see **FOR FURTHER INFORMATION CONTACT**), or visiting the internet at: *http://www.nmfs.noaa.gov/pr/permits/incidental.htm*. Documents cited in this notice may also be viewed, by appointment, during regular business hours, at the aforementioned address.

FOR FURTHER INFORMATION CONTACT: Candace Nachman, Office of Protected Resources, NMFS, (301) 427–8401.

SUPPLEMENTARY INFORMATION:

Background

Sections 101(a)(5)(A) and (D) of the MMPA (16 U.S.C. 1361 *et seq.*) direct the Secretary of Commerce to allow, upon request, the incidental, but not intentional, taking of small numbers of marine mammals by U.S. citizens who engage in a specified activity (other than commercial fishing) within a specified geographical region if certain findings are made and either regulations are issued or, if the taking is limited to harassment, a notice of a proposed authorization is provided to the public for review.

Authorization for incidental takings shall be granted if NMFS finds that the taking will have a negligible impact on the species or stock(s), will not have an unmitigable adverse impact on the availability of the species or stock(s) for subsistence uses (where relevant), and if the permissible methods of taking, other means of effecting the least practicable impact on the species or stock and its habitat, and requirements pertaining to the mitigation, monitoring and reporting of such takings are set forth. NMFS has defined ''negligible impact'' in 50 CFR 216.103 as ''. . . an impact resulting from the specified activity that cannot be reasonably expected to, and is not reasonably likely to, adversely affect the species or stock through effects on annual rates of recruitment or survival.''

Except with respect to certain activities not pertinent here, the MMPA defines ''harassment'' as: ''any act of pursuit, torment, or annoyance which (i) has the potential to injure a marine mammal or marine mammal stock in the wild [Level A harassment]; or (ii) has the potential to disturb a marine mammal or marine mammal stock in the wild by causing disruption of behavioral patterns, including, but not limited to, migration, breathing, nursing, breeding, feeding, or sheltering [Level B harassment].''

Summary of Request

On December 30, 2013, NMFS received an application from BP for the taking of marine mammals incidental to conducting a 3D ocean-bottom sensor (OBS) seismic survey. NMFS determined that the application was adequate and complete on February 14, 2014.

BP proposes to conduct a 3D OBS seismic survey with a transition zone component on state and private lands and Federal and state waters in the Prudhoe Bay area of the Beaufort Sea during the open-water season of 2014. The activity would occur between July 1 and September 30; however, airgun operations would cease on August 25. The following specific aspects of the activity are likely to result in the take of marine mammals: airguns and pingers. Take, by Level B harassment only, of 9 marine mammal species is anticipated to result from the specified activity.

Description of the Specified Activity

Overview

BP's proposed OBS seismic survey would utilize sensors located on the ocean bottom or buried below ground nearshore (surf zone) and onshore. A total of two seismic source vessels will be used during the proposed survey, each carrying two airgun sub-arrays. The discharge volume of each airgun sub-array will not exceed 620 cubic inches (in^3). To limit the duration of the total survey, the source vessels will be operating in a flip-flop mode (i.e., alternating shots); this means that one vessel discharges airguns when the other vessel is recharging.

The purpose of the proposed OBS seismic survey is to obtain current, high-resolution seismic data to image existing reservoirs. The data will increase BP's understanding of the reservoir, allowing for more effective reservoir management. Existing datasets of the proposed survey area include the 1985 Niakuk and 1990 Point McIntyre vibroseis on ice surveys. Data from these two surveys were merged for reprocessing in 2004. A complete set of OBS data has not previously been acquired in the proposed survey area.

Dates and Duration

The planned start date of receiver deployment is approximately July 1, 2014, with seismic data acquisition beginning when open water conditions allow. This has typically been around July 15. Seismic survey data acquisition may take approximately 45 days to complete, which includes downtime for weather and other circumstances. Seismic data acquisition will occur on a 24-hour per day schedule with staggered crew changes. Receiver retrieval and demobilization of equipment and support crew will be completed by the end of September. To limit potential impacts to the bowhead whale fall migration and subsistence hunting, airgun operations will conclude by midnight on August 25. Receiver and equipment retrieval and crew demobilization would continue after airgun operations end but would be completed by September 30. Therefore, the dates for the IHA are July 1 through September 30, 2014.

Specified Geographic Region

The proposed seismic survey would occur in Federal and state waters in the Prudhoe Bay area of the Beaufort Sea, Alaska. The seismic survey project area lies mainly within the Prudhoe Bay Unit and also includes portions of the Northstar, Dewline, and Duck Island Units, as well as non-unit areas. Figures 1 and 2 in BP's application outline the proposed seismic acquisition areas. The project area encompasses approximately 190 mi^2, comprised of approximately 129 mi^2 in water depths of 3 ft and greater, 28 mi^2 in waters less than 3 ft

deep, and 33 mi^2 on land. The approximate boundaries of the project area are between 70°16′ N. and 70°31′ N. and between 147°52′ W. and 148°47′ W. and include state and federal waters, as well as state and private lands. Activity outside the 190 mi^2 area may include source vessels turning from one line to the other while using mitigation guns, vessel transits, and project support and logistics.

Detailed Description of Activities

OBS seismic surveys are typically used to acquire 3D seismic data in water that is too shallow for towed streamer operations or too deep to have grounded ice in winter. Data acquired through this type of survey will allow for the generation of a 3D sub-surface image of the reservoir area. The generation of a 3D image requires the deployment of many parallel receiver lines spaced close together over the area of interest. The activities associated with the proposed OBS seismic survey include equipment and personnel mobilization and demobilization, housing and logistics, temporary support facilities, and seismic data acquisition. The Notice of Proposed IHA (79 FR 21354, April 15, 2014) contains a full detailed description of the 3D OBS seismic survey, including the recording system and seismic source. That information has not changed and is therefore not repeated here.

Comments and Responses

A Notice of Proposed IHA was published in the **Federal Register** on April 15, 2014 (79 FR 21354) for public comment. During the 30-day public comment period, NMFS received two comment letters from the following: the Marine Mammal Commission (MMC) and one private citizen. All of the public comments received on the Notice of Proposed IHA are available on the Internet at: *http://www.nmfs.noaa.gov/pr/pdfs/permits/bp_prudhoebay_comments.pdf*. Following is a summary of the comments and NMFS' responses.

Comment 1: The private citizen's letter requested that NMFS deny BP's request because the survey will kill marine mammals.

Response: As explained in detail in the analysis of the proposed IHA and the associated EA, this seismic survey is not anticipated to result in any injuries, serious injuries, or mortalities of marine mammals, and NMFS has not authorized any takes by injury or death. The most common types of impacts from the proposed survey are minor changes in behavior. Moreover, BP proposed to and NMFS has required the implementation of several mitigation measures to reduce impacts to marine mammals to the lowest level practicable. NMFS determined that the impact of the 3D OBS seismic survey may result, at worst, in a temporary modification in behavior of small numbers of certain species of marine mammals that may occur in the vicinity of the proposed activity.

Comment 2: The MMC states that an accurate characterization of the size of the harassment zone is necessary for obtaining reliable estimates of the numbers of animals taken. The MMC questioned the use of data from sound source verification (SSV) tests from other airgun arrays in the Beaufort Sea because of the different discharge volumes. The MMC recommends that NMFS require BP to conduct sound source and sound propagation measurements for the proposed seismic survey to ensure that the exclusion and harassment zones have not been underestimated. The methods used to calculate the zones should be reviewed and cross-checked before they are implemented. In at least one previous IHA, the methods and calculations were not reviewed and the zones were reduced during the survey. After the calculations were reviewed post-survey, it became apparent that the zones were reduced incorrectly. Therefore, the MMC recommends that NMFS only authorize an adjustment in the size of the exclusion and/or harassment zones during the open-water season if the size(s) of the estimated zones are determined to be too small.

Response: Discharge volume, while a factor in determining sound isopleths, is not the only determining factor and not necessarily the most important factor. The sound pressure of an array is not a linear function of the discharge volume. Rather, the sound pressure is dependent on many factors, such as the number of guns in the array, the discharge volume of each individual gun, the composition of each individual gun (with varying discharge volume) in the array, the distance between each gun, the distance between the subarrays, etc. Because the sound pressures in the far field from an airgun array increase with the number of airguns and with the cube root of the total discharge volume, generally speaking, the number of guns is more important than the total discharge volume for determining source levels. The source levels for the 16-gun 640 in^3 array (used in 2012 in Simpson Lagoon, Beaufort Sea, Alaska) and the 16-gun 1240 in^3 (proposed for this Prudhoe Bay survey) are very similar (223 and 224 dB re 1 μPa rms, respectively). Additionally, the source levels for the eight-gun 880 in^3 array (used in 2008 in shallow water environments of the Beaufort Sea) and the eight-gun 620 in^3 array (proposed for this Prudhoe Bay survey) are very similar (217 and 218 dB re 1 μPa rms, respectively). BP also used isopleth results from previous SSV tests when a 640 in^3 array and an 880 in^3 array were used in combination. That would then result in a total discharge volume of 1520 in^3, which is greater than the total discharge volume of the two subarrays planned for this particular survey (i.e., 1240 in^3). Based on this information, NMFS determined that BP's approach of using previous SSV results from very similar airgun arrays used in very similar environments in the Alaskan Beaufort Sea was appropriate to characterize the size of the harassment zone.

NMFS determined that requiring additional SSV tests for the array proposed to be used in this survey unwarranted. The data used by BP to estimate the relevant isopleths for this survey are fair representations of what is likely to be expected in Prudhoe Bay. Because of the difficulties in conducting SSV tests in extremely shallow water environments (generally less than 10–20 ft of water), such as the one in the proposed survey area, results would not provide any additional useful information. Additionally, the requirement to conduct another SSV in a region where numerous such tests have already been conducted would add additional, unnecessary sound into the marine environment without yielding newer, more valuable data. NMFS does not intend to authorize any changes to the estimated isopleths (described later in this document) after the IHA is issued.

Comment 3: The MMC disagrees with using the area of a circle to estimate the size of the ensonified area. According to the MMC, this would only be correct if the sound source were stationary. For surveys in which the source is moving (i.e., towed airgun arrays), the ensonified area should instead be based on the total linear distance surveyed by the vessel in a day, taking into account the distance to the Level B harassment threshold, which would presumably produce an area greater than that calculated by using the area of a circle. BP and NMFS should use that revised estimate of the ensonified area to determine the numbers of animals that could be taken. The MMC recommends that NMFS require BP to recalculate take estimates for beluga and bowhead whales and ringed, bearded, and spotted seals using the revised ensonified area estimate for a moving sound source.

Response: In shallow water heterogeneous environments (such as

that for the proposed survey), propagation conditions change as the vessels move; therefore, using the total linear distance surveyed by the vessel in a day would not necessarily result in estimates that are any more accurate than the method of using the area of a circle. In deeper water with more constant oceanographic and bathymetric conditions, a complex polygon based on propagation modeling is likely a better method to employ. However, BP will conduct surveys in extremely shallow water (75% of the survey in water depths less than 20 ft and the remaining survey in water depths less than 40 ft). The total ensonified area, as estimated in BP's application, also slightly overestimates the total area because BP did not delete the areas of overlap between the two seismic source vessels. NMFS agrees that the methods used to calculate take provide an accurate representation of the numbers of marine mammals that may potentially occur in the Level B harassment zone.

Comment 4: The MMC states that for beluga and bowhead whales, NMFS used average rather than maximum densities as the basis for its proposed takes. NMFS indicated that 2012/2013 survey data included sightings and effort data in the estimation of densities from areas more offshore than what would be included in the proposed survey, thus the maximum densities would overestimate the numbers of animals expected in the nearshore waters of the survey. According to the MMC, although that rationale might be appropriate for beluga whales, which are typically found in greater numbers offshore than in the proposed survey area, it is not appropriate for bowhead whales, which the MMC expects would be more likely to occur at maximum densities closer to shore. In any case, the MMC has commented on several occasions that NMFS is inconsistent in its use of average versus maximum densities to estimate takes and has recommended that maximum densities be used due to uncertainties in the density and abundance of marine mammal species in the Beaufort Sea and the increasing inter-annual variability in environmental conditions in the Arctic. Takes based on maximum densities would also provide greater assurance that the total potential taking has no more than a negligible impact on the affected stocks. For those reasons, the MMC recommends that NMFS use species-specific maximum density estimates as the basis for estimating the numbers of marine mammals to be taken.

Response: NMFS determined that the use of average rather than maximum density estimates for bowhead whales was appropriate for estimating takes. In July and August (the months when BP proposes to conduct seismic data acquisition), bowhead whales are not commonly observed in the central Alaskan Beaufort Sea. During this time of year, the majority of the bowhead whale population is found in the Canadian Beaufort Sea. The fall migration westward through the Alaskan Beaufort Sea does not typically begin until late August or early September, after BP will have completed seismic airgun operations. Moreover, during a similar survey in Simpson Lagoon in 2012, there were no cetacean sightings during the entirety of the project. Therefore, NMFS determined that the method used to calculate bowhead whale takes was appropriate.

While there is a chance that the inter-annual variability in environmental conditions in the Arctic may lead to changes in the presence and density estimates of marine mammals, BP relied on the most recent, best available data in deriving its density estimates for bowhead and beluga whales. By using data from NMFS aerial surveys flown in 2012 and 2013, higher density estimates were derived than if data from previous years had been used. Again indicating that the estimates are likely accurate. Additionally, NMFS determined that the total potential taking will have no more than a negligible impact on the affected stocks.

Comment 5: The MMC states that BP has proposed that observers would monitor for marine mammals 30 minutes before and during the proposed activities. NMFS agreed with that approach but did not include a requirement for post-activity monitoring. The MMC states, in general, post-activity monitoring is needed to ensure that marine mammals are not taken in unexpected or unauthorized ways or in unanticipated numbers. Some types of taking (e.g., taking by death or serious injury) may not be observed until after the activity has ceased. Post-activity monitoring is the best way, and in some situations may be the only reliable way, to detect certain impacts. Accordingly, the MMC recommends that NMFS require BP to monitor for marine mammals 30 minutes before, during, and 30 minutes after the proposed activities.

Response: NMFS has included a requirement in the IHA that observers monitor for marine mammals 30 minutes before, during, and 30 minutes after the use of the seismic airguns.

Comment 6: The MMC states that two observers would increase the probability of detecting marine mammals approaching or within harassment zones, especially when they are of considerable size. Additional observers could also assist in the collection of data on activities, behavior, and movements of marine mammals in the exclusion and disturbance zones. Behavioral response information is critical for understanding the effect of acoustic activities on various marine mammal species. The MMC recommends that NMFS require BP to deploy a minimum of two protected species observers (PSOs) to: (1) Increase the probability of detecting all marine mammals in or approaching the Level B harassment zones, and (2) assist in the collection of data on activities, behavior, and movements of marine mammals around the source.

Response: The two source vessels are small, with little space available for extra people to be onboard. While there will be two PSOs on each source vessel, only one will officially be on duty per shift. However, the other PSO, as well as the crew members will help to locate marine mammals when possible and notify the on-duty PSO. Because two source vessels will be operating, each with a requirement for an on-duty PSO during seismic airgun operations, two PSOs will be on-duty during all active operations (just not on the same vessel).

NMFS does not anticipate that PSOs will be able to document all marine mammals within the Level B harassment zone. However, because of the small size of the Level A harassment zones for the full array (300 m for the 190 dB isopleth and 600 m for the 180 dB isopleth), NMFS determined that the PSOs will be able to effectively implement mitigation measures, especially with the aid of crew members calling for the implementation of mitigation measures. Also, based on the location and time frame of the survey, cetaceans are highly unlikely to occur in the vicinity of the survey. Therefore, NMFS determined that one PSO on-duty per vessel per shift is sufficient to watch for and record information about marine mammals.

Description of Marine Mammals in the Area of the Specified Activity

The Beaufort Sea supports a diverse assemblage of marine mammals. Table 1 lists the 12 marine mammal species under NMFS jurisdiction with confirmed or possible occurrence in the proposed project area.

Table 1. Marine mammal species with confirmed or possible occurrence in the proposed seismic survey area.

Common Name	Scientific Name	Status	Occurrence	Seasonality	Range	Abundance
Odontocetes						
Beluga whale (Beaufort Sea stock)	Delphinapterus leucas	-	Common	Mostly spring and fall with some in summer	Russia to Canada	39,258
Killer whale	Orcinus orca	-	Occasional/ Extralimital	Mostly summer and early fall	California to Alaska	552
Harbor porpoise	Phocoena phocoena	-	Occasional/ Extralimital	Mostly summer and early fall	California to Alaska	48,215
Narwhal	Monodon monoceros	-				45,358
Mysticetes						
Bowhead whale	Balaena mysticetus	Endangered; Depleted	Common	Mostly spring and fall with some in summer	Russia to Canada	16,892
Gray whale	Eschrichtius robustus	-	Somewhat common	Mostly summer	Mexico to the U.S. Arctic Ocean	19,126
Minke whale	Balaenoptera acutorostrata	-				810-1,003
Humpback whale (Central North Pacific stock)	Megaptera novaeangliae	Endangered; Depleted				21,063
Pinnipeds						
Bearded seal (Beringia distinct population segment)	Erigathus barbatus	Threatened; Depleted	Common	Spring and summer	Bering, Chukchi, and Beaufort Seas	155,000
Ringed seal (Arctic stock)	Phoca hispida	Threatened; Depleted	Common	Year round	Bering, Chukchi, and Beaufort Seas	300,000
Spotted seal	Phoca largha	-	Common	Summer	Japan to U.S. Arctic Ocean	141,479
Ribbon seal	Histriophoca fasciata	Species of concern	Occasional	Summer	Russia to U.S. Arctic Ocean	49,000

Endangered, threatened, or species of concern under the Endangered Species Act (ESA); Depleted under the MMPA

The highlighted (grayed out) species in Table 1 are so rarely sighted in the central Alaskan Beaufort Sea that their presence in the proposed project area, and therefore take, is unlikely. Minke whales are relatively common in the Bering and southern Chukchi seas and have recently also been sighted in the northeastern Chukchi Sea (Aerts *et al.,* 2013; Clarke *et al.,* 2013). Minke whales are rare in the Beaufort Sea. They have not been reported in the Beaufort Sea during the Bowhead Whale Aerial Survey Project/Aerial Surveys of Arctic Marine Mammals (BWASP/ASAMM) surveys (Clarke *et al.,* 2011, 2012; 2013; Monnet and Treacy, 2005), and there was only one observation in 2007 during vessel-based surveys in the region (Funk *et al.,* 2010). Humpback whales have not generally been found in the Arctic Ocean. However, subsistence hunters have spotted humpback whales in low numbers around Barrow, and there have been several confirmed sightings of humpback whales in the northeastern Chukchi Sea in recent years (Aerts *et al.,* 2013; Clarke *et al.,* 2013). The first confirmed sighting of a humpback whale in the Beaufort Sea was recorded in August 2007 (Hashagen *et al.,* 2009) when a cow and calf were observed 54 mi east of Point Barrow. No additional sightings have been documented in the Beaufort Sea. Narwhal are common in the waters of northern Canada, west Greenland, and in the European Arctic, but rarely occur in the Beaufort Sea (COSEWIC, 2004).

Only a handful of sightings have occurred in Alaskan waters (Allen and Angliss, 2013). These three species are not considered further in this IHA notice. Both the walrus and the polar bear could occur in the U.S. Beaufort Sea; however, these species are managed by the U.S. Fish and Wildlife Service (USFWS) and are not considered further in this IHA.

The Beaufort Sea is a main corridor of the bowhead whale migration route. The main migration periods occur in spring from April to June and in fall from late August/early September through October to early November. During the fall migration, several locations in the U.S. Beaufort Sea serve as feeding grounds for bowhead whales. Small numbers of bowhead whales that remain in the U.S. Arctic Ocean during summer also feed in these areas. The U.S. Beaufort Sea is not a main feeding or calving area for any other cetacean species. Ringed seals breed and pup in the Beaufort Sea; however, this does not occur during the summer or early fall. Further information on the biology and local distribution of these species can be found in BP's application (see **ADDRESSES**) and the NMFS Marine Mammal Stock Assessment Reports, which are available online at: *http://www.nmfs.noaa.gov/pr/species/.*

Potential Effects of the Specified Activity on Marine Mammals

This section includes a summary and discussion of the ways that the types of stressors associated with the specified activity (e.g., seismic airgun and pinger operation, vessel movement) have been observed to or are thought to impact marine mammals. This section may include a discussion of known effects that do not rise to the level of an MMPA take (for example, with acoustics, we may include a discussion of studies that showed animals not reacting at all to sound or exhibiting barely measurable avoidance). The discussion may also include reactions that we consider to rise to the level of a take and those that we do not consider to rise to the level of a take. This section is intended as a background of potential effects and does not consider either the specific manner in which this activity will be carried out or the mitigation that will be implemented or how either of those will shape the anticipated impacts from this specific activity. The ''Estimated Take by Incidental Harassment'' section later in this document will include a quantitative analysis of the number of individuals that are expected to be taken by this activity. The ''Negligible Impact Analysis'' section will include the analysis of how this specific activity will impact marine mammals and will consider the content of this section, the ''Estimated Take by Incidental Harassment'' section, the ''Mitigation'' section, and the ''Anticipated Effects on Marine Mammal Habitat'' section to draw conclusions regarding the likely impacts of this activity on the reproductive success or survivorship of individuals and from that on the affected marine mammal populations or stocks.

Operating active acoustic sources, such as airgun arrays, has the potential for adverse effects on marine mammals. The majority of anticipated impacts would be from the use of acoustic sources.

The effects of sound from airgun pulses might include one or more of the following: tolerance, masking of natural sounds, behavioral disturbance, and temporary or permanent hearing impairment or non-auditory effects (Richardson *et al.,* 1995). However, for reasons discussed in the proposed IHA, it is unlikely that there would be any cases of temporary, or especially permanent, hearing impairment resulting from BP's activities. As outlined in previous NMFS documents, the effects of noise on marine mammals are highly variable, often depending on species and contextual factors (based on Richardson *et al.,* 1995).

In the ''Potential Effects of the Specified Activity on Marine Mammals'' section of the Notice of Proposed IHA (79 FR 21354, April 15, 2014), NMFS included a qualitative discussion of the different ways that BP's 2014 3D OBS seismic survey program may potentially affect marine mammals. The discussion focused on information and data regarding potential acoustic and non-acoustic effects from seismic activities (i.e., use of airguns, pingers, and support vessels and aircraft). Marine mammals may experience masking and behavioral disturbance. The information contained in the ''Potential Effects of Specified Activities on Marine Mammals'' section from the proposed IHA has not changed. Please refer to the proposed IHA for the full discussion (79 FR 21354, April 15, 2014). A short summary is provided here.

Marine mammals may behaviorally react when exposed to anthropogenic sound. These behavioral reactions are often shown as: changing durations of surfacing and dives, number of blows per surfacing, or moving direction and/or speed; reduced/increased vocal activities; changing/cessation of certain behavioral activities (such as socializing or feeding); visible startle response or aggressive behavior (such as tail/fluke slapping or jaw clapping); avoidance of areas where sound sources are located; and/or flight responses (e.g., pinnipeds flushing into water from haulouts or rookeries).

Masking is the obscuring of sounds of interest by other sounds, often at similar frequencies. Marine mammals use acoustic signals for a variety of purposes, which differ among species, but include communication between individuals, navigation, foraging, reproduction, avoiding predators, and learning about their environment (Erbe and Farmer, 2000; Tyack, 2000). Masking, or auditory interference, generally occurs when sounds in the environment are louder than, and of a similar frequency as, auditory signals an animal is trying to receive. Masking is a phenomenon that affects animals that are trying to receive acoustic information about their environment, including sounds from other members of their species, predators, prey, and sounds that allow them to orient in their environment. Masking these acoustic signals can disturb the behavior of individual animals, groups of animals, or entire populations. For the airgun sound generated from the proposed seismic survey, sound will consist of low frequency (under 500 Hz) pulses with extremely short durations (less than one second). There is little concern regarding masking near the sound source due to the brief duration of these pulses and relatively longer silence between airgun shots (approximately 5–6 seconds). Masking from airguns is more likely in low-frequency marine mammals like mysticetes (which are not expected to occur in high numbers in the survey area in July and August). It is less likely for mid- to high-frequency cetaceans and pinnipeds.

Hearing impairment (either temporary or permanent) is unlikely. Given the higher level of sound necessary to cause permanent threshold shift as compared with temporary threshold shift, it is considerably less likely that permanent threshold shift would occur during the seismic survey in Prudhoe Bay. Cetaceans generally avoid the immediate area around operating seismic vessels, as do some other marine mammals. Some pinnipeds show avoidance reactions to airguns, but their avoidance reactions are generally not as strong or consistent as those of cetaceans, and occasionally they seem to be attracted to operating seismic vessels (NMFS, 2010).

Serious injury or mortality is not anticipated from use of the equipment. To date, there is no evidence that serious injury, death, or stranding by marine mammals can occur from exposure to airgun pulses, even in the

case of large airgun arrays. Additionally, BP's project will use medium sized airgun arrays in shallow water. NMFS does not expect any marine mammals will incur serious injury or mortality in the shallow waters of Prudhoe Bay or strand as a result of the proposed seismic survey.

Active acoustic sources other than the airguns (i.e., pingers) are proposed for BP's 2014 seismic survey in Prudhoe Bay, Beaufort Sea, Alaska. In general, the potential effects of this equipment on marine mammals are similar to those from the airguns, except the magnitude of the impacts is expected to be much less due to the lower intensity of the source.

Vessel activity and noise associated with vessel activity will temporarily increase in the action area during BP's seismic survey as a result of the operation of 8–10 vessels. To minimize the effects of vessels and noise associated with vessel activity, BP will alter speed if a marine mammal gets too close to a vessel. In addition, source vessels will be operating at slow speed (1–5 knots) when conducting surveys. Marine mammal monitoring observers will alert vessel captains as animals are detected to ensure safe and effective measures are applied to avoid coming into direct contact with marine mammals. Therefore, NMFS neither anticipates nor authorizes takes of marine mammals from ship strikes.

Anticipated Effects on Marine Mammal Habitat

The primary potential impacts to marine mammal habitat and other marine species are associated with elevated sound levels produced by airguns and other active acoustic sources. However, other potential impacts to the surrounding habitat from physical disturbance are also possible. The proposed IHA contains a full discussion of the potential impacts to marine mammal habitat and prey species in the project area. No changes have been made to that discussion. Please refer to the proposed IHA for the full discussion of potential impacts to marine mammal habitat (79 FR 21354, April 15, 2014). NMFS has determined that BP's 3D OBS seismic survey program is not expected to have any habitat-related effects that could cause significant or long-term consequences for individual marine mammals or their populations.

Mitigation

In order to issue an incidental take authorization (ITA) under section 101(a)(5)(D) of the MMPA, NMFS must set forth the permissible methods of taking pursuant to such activity, and other means of effecting the least practicable impact on such species or stock and its habitat, paying particular attention to rookeries, mating grounds, and areas of similar significance, and on the availability of such species or stock for taking for certain subsistence uses (where relevant). This section summarizes the required mitigation measures contained in the IHA.

Mitigation Measures in BP's Application

BP described general mitigation measures that apply to all vessels involved in the survey and specific mitigation measures that apply to the source vessels operating airguns. The protocols are discussed next and can also be found in Section 11 of BP's application (see **ADDRESSES**).

1. General Mitigation Measures

These general mitigation measures apply to all vessels that are part of the Prudhoe Bay seismic survey, including crew transfer vessels. The two source vessels will also operate under an additional set of specific mitigation measures during airgun operations (described later in this document).

The general mitigation measures include: (1) Adjusting speed to avoid collisions with whales and during periods of low visibility; (2) checking the waters immediately adjacent to vessels with propellers to ensure that no marine mammals will be injured; (3) avoiding concentrations of groups of whales and not operating vessels in a way that separates members of a group; (4) reducing vessel speeds to less than 10 knots in the presence of feeding whales; (5) reducing speed and steering around groups of whales if circumstances allow (but never cutting off a whale's travel path) and avoiding multiple changes in direction and speed when within 900 ft of whales; (6) maintaining an altitude of at least 1,000 ft when flying helicopters, except in emergency situations or during take-offs and landings; and (7) not hovering or circling with helicopters above or within 0.3 mi of groups of whales.

2. Seismic Airgun Mitigation Measures

BP will establish and monitor Level A harassment exclusion zones for all marine mammal species. These zones will be monitored by PSOs (more detail later). Should marine mammals enter these exclusion zones, the PSOs will call for and implement the suite of mitigation measures described next.

Ramp-up Procedure: Ramp-up procedures of an airgun array involve a step-wise increase in the number of operating airguns until the required discharge volume is achieved. The purpose of a ramp-up (sometimes referred to as ''soft-start'') is to provide marine mammals in the vicinity of the activity the opportunity to leave the area and to avoid the potential for injury or impairment of their hearing abilities.

During ramp-up, BP will implement the common procedure of doubling the number of operating airguns at 5-minute intervals, starting with the smallest gun in the array. For the 620 in^3 sub-array this is estimated to take approximately 15 minutes and for the 1,240 in^3 airgun array approximately 20 minutes. During ramp-up, the exclusion zone for the full airgun array will be observed. The ramp-up procedures will be applied as follows:

1. A ramp-up, following a cold start, can be applied if the exclusion zone has been free of marine mammals for a consecutive 30-minute period. The entire exclusion zone must have been visible during these 30 minutes. If the entire exclusion zone is not visible, then ramp-up from a cold start cannot begin.

2. Ramp-up procedures from a cold start will be delayed if a marine mammal is sighted within the exclusion zone during the 30-minute period prior to the ramp-up. The delay will last until the marine mammal(s) has been observed to leave the exclusion zone or until the animal(s) is not sighted for at least 15 minutes (seals) or 30 minutes (cetaceans).

3. A ramp-up, following a shutdown, can be applied if the marine mammal(s) for which the shutdown occurred has been observed to leave the exclusion zone or until the animal(s) has not been sighted for at least 15 minutes (seals) or 30 minutes (cetaceans). This assumes there was a continuous observation effort prior to the shutdown and the entire exclusion zone is visible.

4. If, for any reason, power to the airgun array has been discontinued for a period of 10 minutes or more, ramp-up procedures need to be implemented. Only if the PSO watch has been suspended, a 30-minute clearance of the exclusion zone is required prior to commencing ramp-up. Discontinuation of airgun activity for less than 10 minutes does not require a ramp-up.

5. The seismic operator and PSOs will maintain records of the times when ramp-ups start and when the airgun arrays reach full power.

Power Down Procedure: A power down is the immediate reduction in the number of operating airguns such that the radii of the 190 dB and 180 dB (rms) zones are decreased to the extent that an observed marine mammal is not in the applicable exclusion zone of the full array. During a power down, one airgun

(or some other number of airguns less than the full airgun array) continues firing. The continued operation of one airgun is intended to (a) alert marine mammals to the presence of airgun activity, and (b) retain the option of initiating a ramp up to full operations under poor visibility conditions.

1. The array will be immediately powered down whenever a marine mammal is sighted approaching close to or within the applicable exclusion zone of the full array, but is outside the applicable exclusion zone of the single mitigation airgun;

2. Likewise, if a mammal is already within the exclusion zone when first detected, the airguns will be powered down immediately;

3. If a marine mammal is sighted within or about to enter the applicable exclusion zone of the single mitigation airgun, it too will be shut down; and

4. Following a power down, ramp-up to the full airgun array will not resume until the marine mammal has cleared the applicable exclusion zone. The animal will be considered to have cleared the exclusion zone if it has been visually observed leaving the exclusion zone of the full array, or has not been seen within the zone for 15 minutes (seals) or 30 minutes (cetaceans).

Shut-down Procedures: The operating airgun(s) will be shut down completely if a marine mammal approaches or enters the 190 or 180 dB (rms) exclusion radius of the smallest airgun. Airgun activity will not resume until the marine mammal has cleared the applicable exclusion radius of the full array. The animal will be considered to have cleared the exclusion radius as described above under ramp-up procedures.

Poor Visibility Conditions: BP plans to conduct 24-hr operations. PSOs will not be on duty during ongoing seismic operations during darkness, given the very limited effectiveness of visual observation at night (there will be no periods of darkness in the survey area until mid-August). The provisions associated with operations at night or in periods of poor visibility include the following:

- If during foggy conditions, heavy snow or rain, or darkness (which may be encountered starting in late August), the full 180 dB exclusion zone is not visible, the airguns cannot commence a ramp-up procedure from a full shut-down; and
- If one or more airguns have been operational before nightfall or before the onset of poor visibility conditions, they can remain operational throughout the night or poor visibility conditions. In this case ramp-up procedures can be initiated, even though the exclusion zone may not be visible, on the assumption that marine mammals will be alerted by the sounds from the single airgun and have moved away.

BP is aware that available techniques to more effectively detect marine mammals during limited visibility conditions (darkness, fog, snow, and rain) are in need of development and has in recent years supported research and field trials intended to improve methods of detecting marine mammals under these conditions. BP intends to continue research and field trials to improve methods of detecting marine mammals during periods of low visibility.

Additional Mitigation Measures Required by NMFS

The mitigation airgun will be operated at approximately one shot per minute and will not be operated for longer than three hours in duration during daylight hours and good visibility. In cases when the next start-up after the turn is expected to be during lowlight or low visibility, use of the mitigation airgun may be initiated 30 minutes before darkness or low visibility conditions occur and may be operated until the start of the next seismic acquisition line. The mitigation gun must still be operated at approximately one shot per minute.

NMFS clarified or refined some of the mitigation measures contained in BP's application (and listed earlier in this section). In low visibility conditions, NMFS requires BP to reduce speeds to 9 knots or less. Separately, NMFS has defined a group or concentration of whales as five or more individuals.

Mitigation Conclusions

NMFS has carefully evaluated BP's mitigation measures and considered a range of other measures in the context of ensuring that NMFS prescribes the means of effecting the least practicable impact on the affected marine mammal species and stocks and their habitat. Our evaluation of potential measures included consideration of the following factors in relation to one another:

- The manner in which, and the degree to which, the successful implementation of the measures are expected to minimize adverse impacts to marine mammals;
- The proven or likely efficacy of the specific measure to minimize adverse impacts as planned; and
- The practicability of the measure for applicant implementation.

Based on our evaluation of the applicant's proposed measures, as well as other measures considered by NMFS and those recommended by the public, NMFS has determined that the required mitigation measures provide the means of effecting the least practicable impact on marine mammals species or stocks and their habitat, paying particular attention to rookeries, mating grounds, and areas of similar significance. Measures to ensure availability of such species or stock for taking for certain subsistence uses are discussed later in this document (see ''Impact on Availability of Affected Species or Stock for Taking for Subsistence Uses'' section).

Monitoring and Reporting

In order to issue an ITA for an activity, section 101(a)(5)(D) of the MMPA states that NMFS must set forth ''requirements pertaining to the monitoring and reporting of such taking''. The MMPA implementing regulations at 50 CFR 216.104(a)(13) indicate that requests for ITAs must include the suggested means of accomplishing the necessary monitoring and reporting that will result in increased knowledge of the species and of the level of taking or impacts on populations of marine mammals that are expected to be present in the proposed action area. BP submitted information regarding marine mammal monitoring to be conducted during seismic operations as part of the IHA application. That information can be found in Sections 11 and 13 of the application.

Monitoring Measures

1. Visual Monitoring

Two observers referred to as PSOs will be present on each seismic source vessel. Of these two PSOs, one will be on watch at all times to monitor the 190 and 180 dB exclusion zones for the presence of marine mammals during airgun operations. The main objectives of the vessel-based marine mammal monitoring are as follows: (1) To implement mitigation measures during seismic operations (e.g. course alteration, airgun power down, shut-down and ramp-up); and (2) To record all marine mammal data needed to estimate the number of marine mammals potentially affected, which must be reported to NMFS within 90 days after the survey.

BP intends to work with experienced PSOs. At least one Alaska Native resident, who is knowledgeable about Arctic marine mammals and the subsistence hunt, is expected to be included as one of the team members aboard the vessels. Before the start of the seismic survey, the crew of the seismic source vessels will be briefed on

the function of the PSOs, their monitoring protocol, and mitigation measures to be implemented.

On all source vessels, at least one observer will monitor for marine mammals at any time during daylight hours (there will be no periods of total darkness until mid-August). PSOs will be on duty in shifts of a maximum of 4 hours at a time, although the exact shift schedule will be established by the lead PSO in consultation with the other PSOs. In response to a public comment, language has been included in the IHA to clarify that the on-duty PSO must monitor for marine mammals 30 minutes before, during, and 30 minutes after the use of the seismic airguns.

The source vessels will offer suitable platforms for marine mammal observations. Observations will be made from locations where PSOs have the best view around the vessel. During daytime, the PSO(s) will scan the area around the vessel systematically with reticle binoculars and with the naked eye. Because the main purpose of the PSO on board the vessel is detecting marine mammals for the implementation of mitigation measures according to specific guidelines, BP prefers (and NMFS agrees) to keep the information to be recorded as concise as possible, allowing the PSO to focus on detecting marine mammals. The following information will be collected by the PSOs:

- Environmental conditions—consisting of sea state (in Beaufort Wind force scale according to NOAA), visibility (in km, with 10 km indicating the horizon on a clear day), and sun glare (position and severity). These will be recorded at the start of each shift, whenever there is an obvious change in one or more of the environmental variables, and whenever the observer changes shifts;
- Project activity—consisting of airgun operations (on or off), number of active guns, line number. This will be recorded at the start of each shift, whenever there is an obvious change in project activity, and whenever the observer changes shifts; and
- Sighting information—consisting of the species (if determinable), group size, position and heading relative to the vessel, behavior, movement, and distance relative to the vessel (initial and closest approach). These will be recorded upon sighting a marine mammal or group of animals.

When marine mammals in the water are detected within or about to enter the designated exclusion zones, the airgun(s) power down or shut-down procedures will be implemented immediately. To assure prompt implementation of power downs and shut-downs, multiple channels of communication between the PSOs and the airgun technicians will be established. During the power down and shut-down, the PSO(s) will continue to maintain watch to determine when the animal(s) are outside the exclusion radius. Airgun operations can resume with a ramp-up procedure (depending on the extent of the power down) if the observers have visually confirmed that the animal(s) moved outside the exclusion zone, or if the animal(s) were not observed within the exclusion zone for 15 minutes (seals) or for 30 minutes (cetaceans). Direct communication with the airgun operator will be maintained throughout these procedures.

All marine mammal observations and any airgun power down, shut-down, and ramp-up will be recorded in a standardized format. Data will be entered into or transferred to a custom database. The accuracy of the data entry will be verified daily through QA/QC procedures. Recording procedures will allow initial summaries of data to be prepared during and shortly after the field program, and will facilitate transfer of the data to other programs for further processing and archiving.

2. Fish and Airgun Sound Monitoring

BP proposes to conduct research on fish species in relation to airgun operations, including prey species important to ice seals, during the proposed seismic survey. The North Prudhoe Bay OBS seismic survey offers a unique opportunity to assess the impacts of airgun sounds on fish, specifically on changes in fish abundance in fyke nets that have been sampled in the area for more than 30 years. The monitoring study would occur over a 2-month period during the open-water season. During this time, fish are counted and sized every day, unless sampling is prevented by weather, the presence of bears, or other events. Fish mortality is also noted.

The fish-sampling period coincides with the North Prudhoe seismic survey, resulting in a situation where each of the four fyke nets will be exposed to varying daily exposures to airgun sounds. That is, as source vessels move back and forth across the project area, fish caught in nets will be exposed to different sounds levels at different nets each day. To document relationships between fish catch in each fyke net and received sound levels, BP will attempt to instrument each fyke net location with a recording hydrophone. Recording hydrophones, to the extent possible, will have a dynamic range that extends low enough to record near ambient sounds and high enough to capture sound levels during relatively close approaches by the airgun array (i.e., likely levels as high as about 200 dB re 1 uPa). Bandwidth will extend from about 10 Hz to at least 500 Hz. In addition, because some fish (especially salmonids) are likely to be sensitive to particle velocity instead of or in addition to sound pressure level, BP will attempt to instrument each fyke net location with a recording particle velocity meter. Acoustic and environmental data will be used in statistical models to assess relationships between acoustic and fish variables. Additional information on the details of the fish monitoring study can be found in Section 13.1 of BP's application (see **ADDRESSES**).

Monitoring Plan Peer Review

The MMPA requires that monitoring plans be independently peer reviewed ''where the proposed activity may affect the availability of a species or stock for taking for subsistence uses'' (16 U.S.C. 1371(a)(5)(D)(ii)(III)). Regarding this requirement, NMFS' implementing regulations state, ''Upon receipt of a complete monitoring plan, and at its discretion, [NMFS] will either submit the plan to members of a peer review panel for review or within 60 days of receipt of the proposed monitoring plan, schedule a workshop to review the plan'' (50 CFR 216.108(d)).

NMFS convened an independent peer review panel, comprised of experts in the fields of marine mammal ecology and underwater acoustics, to review BP's Prudhoe Bay OBS Seismic Survey Monitoring Plan. The panel met on January 8–9, 2013, and provided their final report to NMFS on February 25, 2013. The full panel report can be viewed on the Internet at: *http://www.nmfs.noaa.gov/pr/pdfs/permits/openwater/bp_panel2013.pdf*.

NMFS provided the panel with BP's monitoring plan and asked the panel to answer the following questions regarding the plan:

1. Will the applicant's stated objectives effectively further the understanding of the impacts of their activities on marine mammals and otherwise accomplish the goals stated above? If not, how should the objectives be modified to better accomplish the goals above?

2. Can the applicant achieve the stated objectives based on the methods described in the plan?

3. Are there technical modifications to the proposed monitoring techniques and methodologies proposed by the applicant that should be considered to

better accomplish their stated objectives?

4. Are there techniques not proposed by the applicant (i.e., additional monitoring techniques or methodologies) that should be considered for inclusion in the applicant's monitoring program to better accomplish their stated objectives?

5. What is the best way for an applicant to present their data and results (formatting, metrics, graphics, etc.) in the required reports that are to be submitted to NMFS (i.e., 90-day report and comprehensive report)?

NMFS shared the panel's report with BP in March 2013. BP originally submitted this IHA application with a monitoring plan to conduct this program during the 2013 open-water season; however, after undergoing peer review of the monitoring plan in early 2013, BP subsequently cancelled the 2013 operation. The 2014 program is the same as that reviewed by the panel in 2013. BP reviewed the 2013 panel recommendation report and incorporated several of the panel's recommendations into the monitoring plan contained in the 2014 application. NMFS reviewed the panel's report and agrees with the recommendations included in BP's 2014 monitoring plan. A summary of the measures that were included is provided next.

Based on the panel report, BP will follow a pre-determined regime for scanning of the area by PSOs that is based on the relative importance of detecting marine mammals in the near- and far fields. PSOs will simply record the primary behavioral state (i.e., traveling, socializing, feeding, resting, approaching or moving away from vessels) and relative location of the observed marine mammals and not try to precisely determine the behavior or the context.

Other recommendations made by panel members that NMFS supports and has included in the monitoring measures include: (1) Recording observations of pinnipeds on land and not just in the water; (2) developing a means by which PSOs record data with as little impact on observation time as possible; (3) continuing PSO observation watches when there is an extended period when no airguns on any of the source vessels are operating to collect additional observation data during periods of non-seismic; and (4) accounting for factors such as water depth when estimating the actual level of takes because of the difficulties in monitoring during darkness or inclement weather. Moreover, the panel recommended and NMFS agrees that BP should be very clear in the 90-day technical report about what periods are considered ''seismic'' and ''non-seismic'' for their analyses.

As recommended by the panel, NMFS encourages BP to examine data from ASAMM and other such programs to assess possible impacts from their seismic surveys. As noted earlier in this document, BP has proposed a fish and airgun sound monitoring study, which has been well received by past panel members. This study will also allow BP to collect sound signature data on equipment used during this proposed survey.

The panel also recommended that BP work to understand the cumulative nature of the activity and sound footprint. As described in Section 14 of the IHA application, BP remains committed to working with a wide range of experts to improve understanding of the cumulative effects of multiple sound sources and has sponsored an expert working group on the issue.

Reporting Measures

1. 90-Day Technical Report

A report will be submitted to NMFS within 90 days after the end of the proposed seismic survey. The report will summarize all activities and monitoring results conducted during in-water seismic surveys. The Technical Report will include the following:

- Summary of project start and end dates, airgun activity, number of guns, and the number and circumstances of implementing ramp-up, power down, shutdown, and other mitigation actions;
- Summaries of monitoring effort (e.g., total hours, total distances, and marine mammal distribution through the study period, accounting for sea state and other factors affecting visibility and detectability of marine mammals);
- Analyses of the effects of various factors influencing detectability of marine mammals (e.g., sea state, number of observers, and fog/glare);
- Species composition, occurrence, and distribution of marine mammal sightings, including date, water depth, numbers, age/size/gender categories (if determinable), and group sizes;
- Analyses of the effects of survey operations;
- Sighting rates of marine mammals during periods with and without seismic survey activities (and other variables that could affect detectability), such as: (i) Initial sighting distances versus survey activity state; (ii) closest point of approach versus survey activity state; (iii) observed behaviors and types of movements versus survey activity state; (iv) numbers of sightings/individuals seen versus survey activity state; (v) distribution around the source vessels versus survey activity state; and (vi) estimates of exposures of marine mammals to Level B harassment thresholds based on presence in the 160 dB harassment zone.

2. Fish and Airgun Sound Report

BP will present the results of the fish and airgun sound study to NMFS in a detailed report. BP proposes to also submit that report to a peer reviewed journal for publication and present the results at a scientific conference and in Barrow and Nuiqsut.

3. Notification of Injured or Dead Marine Mammals

In the unanticipated event that the specified activity clearly causes the take of a marine mammal in a manner prohibited by the IHA, such as an injury (Level A harassment), serious injury or mortality (e.g., ship-strike, gear interaction, and/or entanglement), BP would immediately cease the specified activities and immediately report the incident to the Chief of the Permits and Conservation Division, Office of Protected Resources, NMFS, and the Alaska Regional Stranding Coordinators. The report would include the following information:

- Time, date, and location (latitude/longitude) of the incident;
- Name and type of vessel involved;
- Vessel's speed during and leading up to the incident;
- Description of the incident;
- Status of all sound source use in the 24 hours preceding the incident;
- Water depth;
- Environmental conditions (e.g., wind speed and direction, Beaufort sea state, cloud cover, and visibility);
- Description of all marine mammal observations in the 24 hours preceding the incident;
- Species identification or description of the animal(s) involved;
- Fate of the animal(s); and
- Photographs or video footage of the animal(s) (if equipment is available).

Activities would not resume until NMFS is able to review the circumstances of the prohibited take. NMFS would work with BP to determine what is necessary to minimize the likelihood of further prohibited take and ensure MMPA compliance. BP would not be able to resume their activities until notified by NMFS via letter, email, or telephone.

In the event that BP discovers an injured or dead marine mammal, and the lead PSO determines that the cause of the injury or death is unknown and the death is relatively recent (i.e., in less

than a moderate state of decomposition as described in the next paragraph), BP would immediately report the incident to the Chief of the Permits and Conservation Division, Office of Protected Resources, NMFS, and the NMFS Alaska Stranding Hotline and/or by email to the Alaska Regional Stranding Coordinators. The report would include the same information identified in the paragraph above. Activities would be able to continue while NMFS reviews the circumstances of the incident. NMFS would work with BP to determine whether modifications in the activities are appropriate.

In the event that BP discovers an injured or dead marine mammal, and the lead PSO determines that the injury or death is not associated with or related to the activities authorized in the IHA (e.g., carcass with moderate to advanced decomposition, or scavenger damage), BP would report the incident to the Chief of the Permits and Conservation Division, Office of Protected Resources, NMFS, and the NMFS Alaska Stranding Hotline and/or by email to the Alaska Regional Stranding Coordinators, within 24 hours of the discovery. BP would provide photographs or video footage (if available) or other documentation of the stranded animal sighting to NMFS and the Marine Mammal Stranding Network. Activities may continue while NMFS reviews the circumstances of the incident.

Estimated Take by Incidental Harassment

Except with respect to certain activities not pertinent here, the MMPA defines ''harassment'' as: Any act of pursuit, torment, or annoyance which (i) has the potential to injure a marine mammal or marine mammal stock in the wild [Level A harassment]; or (ii) has the potential to disturb a marine mammal or marine mammal stock in the wild by causing disruption of behavioral patterns, including, but not limited to, migration, breathing, nursing, breeding, feeding, or sheltering [Level B harassment]. Only take by Level B behavioral harassment of some species is anticipated as a result of the OBS seismic survey. Anticipated impacts to marine mammals are associated with noise propagation from the sound sources (e.g., airguns and pingers) used in the seismic survey. No take is expected to result from vessel strikes because of the slow speed of the vessels (1–5 knots while acquiring seismic data) and because of mitigation measures to reduce collisions with marine mammals. Additionally, no take is expected to result from helicopter operations because of altitude restrictions.

BP requested take of 11 marine mammal species by Level B harassment. However, for reasons mentioned earlier in this document, we have determined it is highly unlikely that humpback and minke whales would occur in the seismic survey area. Therefore, NMFS has not authorized take of these two species. The species for which take, by Level B harassment only, is authorized include: Bowhead, beluga, gray, and killer whales; harbor porpoise; and ringed, bearded, spotted, and ribbon seals.

The airguns produce impulsive sounds. The current acoustic thresholds used by NMFS to estimate Level B and Level A harassment are presented in Table 2.

TABLE 2—CURRENT ACOUSTIC EXPOSURE CRITERIA USED BY NMFS

Criterion	Criterion definition	Threshold
Level A Harassment (Injury)	Permanent Threshold Shift (PTS) (Any level above that which is known to cause TTS).	180 dB re 1 microPa-m (cetaceans)/190 dB re 1 microPa-m (pinnipeds) root mean square (rms).
Level B Harassment	Behavioral Disruption (for impulse noises)	160 dB re 1 microPa-m (rms).
Level B Harassment	Behavioral Disruption (for continuous, noise)	120 dB re 1 microPa-m (rms).

Section 6 of BP's application contains a description of the methodology used by BP to estimate takes by harassment, including calculations for the 160 dB (rms) isopleth and marine mammal densities in the areas of operation (see **ADDRESSES**), which was also provided in the proposed IHA notice (79 FR 21354, April 15, 2014). NMFS verified BP's methods, and used the density and sound isopleth measurements in estimating take. However, after initiating ESA section 7 consultation on this action, NMFS noticed that BP rounded the average 180 and 190 dB (rms) isopleths to the nearest 100 but rounded the average 160 dB (rms) isopleth to the nearest 5 km instead of the nearest 100. This resulted in a 160 dB isopleth more than twice the average expected distance of the isopleth. Table 7 in BP's application presented the largest average 160 dB isopleth as 2,182 m but calculated take assuming a 160 dB isopleth as 5,000 m. To remain consistent with the estimation of the other isopleths, NMFS has only rounded the average 160 dB isopleth for the 620 in^3 array to 2,200 m. However, for reasons explained below this only changed the estimated take level for bowhead whales. Also, as noted later in this section, NMFS authorized the maximum number of estimated takes for all species, not just for cetaceans as presented by BP in order to ensure that exposure estimates are not underestimated for pinnipeds.

During data acquisition, the source vessels of the proposed OBS Prudhoe Bay seismic survey will cover an area of about 190 mi^2 in water depths ranging from 3 to 50 ft. Seismic data acquisition will be halted at the start of the Cross Island fall bowhead whale hunt. The total duration of seismic data acquisition in the Prudhoe Bay area is estimated to be approximately 45 days. About 25% of downtime is included in this total, so the actual number of days that airguns are expected to be operating is about 34, based on a continuous 24-hr operation.

Marine Mammal Density Estimates

The Notice of Proposed IHA (79 FR 21354, April 15, 2014) contained a complete description of the derivation of the marine mammal density estimates. That discussion has not changed and is therefore not repeated here.

Level A and Level B Harassment Zone Distances

For the 2014 OBS seismic survey, BP used existing SSV measurements to establish distances to received sound pressure levels (SPLs). The Notice of Proposed IHA (79 FR 21354, April 15, 2014) contained a complete description of the derivation of the Level A and Level B harassment zone distances. With the exception of slightly altering the distances of the Level B harassment zone, as described above, nothing in the discussion has changed. Therefore, the entire discussion is not repeated here.

Table 3 in this document presents the radii used to estimate take (160 dB isopleth) and to implement mitigation measures (180 dB and 190 dB isopleths)

from the full airgun array and the 40 in^3 and 10 in^3 mitigation guns. However, take is only estimated using the larger radius of the full airgun array.

TABLE 3—DISTANCES (IN METERS) TO BE USED FOR ESTIMATING TAKE BY LEVEL B HARASSMENT AND FOR MITIGATION PURPOSES DURING THE PROPOSED 2014 NORTH PRUDHOE BAY SEISMIC SURVEY

Airgun discharge volume (in^3)	190 dB re 1 μPa	180 dB re 1 μPa	160 dB re 1 μPa
620–1240 in^3	300	600	2200
40 in^3	70	200	1100
10 in^3	20	50	500

Numbers of Marine Mammals Potentially Taken by Harassment

The potential number of marine mammals that might be exposed to the 160 dB re 1 μPa (rms) SPL was calculated differently for cetaceans and pinnipeds, as described in Section 6.3 of BP's application and the Notice of Proposed IHA (79 FR 21354, April 15, 2014). The change to the 160 dB isopleth for the full array only had implications for the take estimate for bowhead whales. Because of the method used to calculate takes for pinnipeds, the isopleth change did not change the pinniped takes described in those earlier documents. Additionally, the change did not alter the proposed take estimates for other cetacean species. Therefore, those discussions are not repeated here.

1. Number of Bowheads Potentially Taken by Harassment

The potential number of bowhead whales that might be exposed to the 160 dB re 1 μPa (rms) SPL was calculated by multiplying:

- The expected bowhead density as provided in Table 5 in BP's application;
- The anticipated area around each source vessel that is ensonified by the 160 dB re 1 μPa (rms) SPL; and
- The estimated number of 24-hr days that the source vessels are operating.

The area expected to be ensonified by the 620–1,240 in^3 array was determined based on the distance to the 160 dB re 1 μPa (rms) SPL as determined from the average 640–880 in^3 array measurements (Table 7 in BP's application and summarized in Table 3 in this document), rounded to the nearest 100. Based on a radius of 2.2 km, the 160 dB isopleth used in the exposure calculations was 15.2 km^2. It is expected that on average, two source vessels will be operating simultaneously, although one source vessel might sometimes be engaged in crew change, maintenance, fueling, or other activities that do not require the operation of airguns. The minimum distance between the two source vessels will be about 550 ft. Although there will be an overlap in the ensonified area, for the estimated number of exposures, BP summed the exposed area of each source vessel. Using the maximum distance and summing the isopleths of both source vessels provides a likely overestimate of marine mammal exposures.

The estimated number of 24-hr days of airgun operations was determined by assuming a 25% downtime during the 45-day planned data acquisition period. Downtime is related to weather, equipment maintenance, mitigation implementation, and other circumstances. The total number of full 24-hr days that data acquisition is expected to occur is approximately 34 days or 816 hours.

Based on this revision to the 160 dB isopleth, the average and maximum number of bowhead whales potentially exposed to sound levels of 160 dB re 1μPa (rms) or more is estimated at 2 and 6, respectively. NMFS has authorized the maximum number of expected exposures based on the unexpected large numbers of bowheads observed in August during the 2013 ASAMM survey. These estimated exposures do not take into account the proposed mitigation measures, such as PSOs watching for animals, shutdowns or power downs of the airguns when marine mammals are seen within defined ranges, and ramp-up of airguns.

Estimated Take by Harassment Summary

Table 4 here outlines the density estimates used to estimate Level B takes, the authorized Level B harassment take levels, the abundance of each species in the Beaufort Sea, the percentage of each species or stock estimated to be taken, and current population trends. NMFS authorized the maximum estimates of exposures. Density estimates are not available for species that are uncommon in the proposed seismic survey area.

TABLE 4—DENSITY ESTIMATES OR SPECIES SIGHTING RATES, AUTHORIZED LEVEL B HARASSMENT TAKE LEVELS, SPECIES OR STOCK ABUNDANCE, PERCENTAGE OF POPULATION PROPOSED TO BE TAKEN, AND SPECIES TREND STATUS

Species	Density (#/km^2)	Sighting rate (ind/hr)	Authorized Level B take	Abundance	Percentage of population	Trend
Beluga whale	0.0105		75	39,258	0.19	No reliable information.
Killer whale	NA		3	552	0.54	Stable.
Harbor porpoise	NA		3	48,215	0.01	No reliable information.
Bowhead whale	0.0055		6	16,892	0.04	Increasing.
Gray whale	NA		3	19,126	0.02	Increasing.
Bearded seal		0.107	87	155,000	0.06	No reliable information.
Ringed seal		0.397	324	300,000	0.11	No reliable information.
Spotted seal		0.126	103	141,479	0.07	No reliable information.
Ribbon seal		NA	3	49,000	0.01	No reliable information.

Analysis and Determinations

Negligible Impact

Negligible impact is ''an impact resulting from the specified activity that cannot be reasonably expected to, and is not reasonably likely to, adversely affect the species or stock through effects on annual rates of recruitment or survival'' (50 CFR 216.103). A negligible impact finding is based on the lack of likely adverse effects on annual rates of recruitment or survival (i.e., population-level effects). An estimate of the number of Level B harassment takes, alone, is not enough information on which to base an impact determination. In addition to considering estimates of the number of marine mammals that might be ''taken'' through behavioral harassment, NMFS must consider other factors, such as the likely nature of any responses (their intensity, duration, etc.), the context of any responses (critical reproductive time or location, migration, etc.), as well as the number and nature of estimated Level A harassment takes, the number of estimated mortalities, effects on habitat, and the status of the species.

No injuries or mortalities are anticipated to occur as a result of BP's 3D OBS seismic survey, and none are authorized. Additionally, animals in the area are not expected to incur hearing impairment or non-auditory physiological effects. The number of takes that are authorized are expected to be limited to short-term Level B behavioral harassment. While the airguns will be operated continuously for about 34 days, the project time frame will occur when cetacean species are typically not found in the project area or are found only in low numbers. While pinnipeds are likely to be found in the project area more frequently, their distribution is dispersed enough that they likely will not be in the Level B harassment zone continuously. As mentioned previously, pinnipeds appear to be more tolerant of anthropogenic sound than mystiectes.

The Alaskan Beaufort Sea is part of the main migration route of the Western Arctic stock of bowhead whales. However, the seismic survey has been planned to occur when the majority of the population is found in the Canadian Beaufort Sea. Active airgun operations will cease by midnight on August 25 before the main fall migration begins and well before cow/calf pairs begin migrating through the area. Additionally, several locations within the Beaufort Sea serve as feeding grounds for bowhead whales. However, the primary feeding grounds are not found in Prudhoe Bay. The majority of bowhead whales feed in the Alaskan Beaufort Sea during the fall migration period, which will occur after the cessation of the airgun survey.

Belugas that migrate through the U.S. Beaufort Sea typically do so farther offshore (more than 37 mi [60 km]) and in deeper waters (more than 656 ft [200 m]) than where the 3D OBS seismic survey activities would occur. Gray whales are rarely sighted this far east in the U.S. Beaufort Sea. Additionally, there are no known feeding grounds for gray whales in the Prudhoe Bay area. The most northern feeding sites known for this species are located in the Chukchi Sea near Hanna Shoal and Point Barrow. The other cetacean species for which take is authorized are uncommon in Prudhoe Bay, and no known feeding or calving grounds occur in Prudhoe Bay for these species. Based on these factors, exposures of cetaceans to anthropogenic sounds are not expected to last for prolonged periods (i.e., several days or weeks) since they are not known to remain in the area for extended periods of time in July and August. Also, the shallow water location of the survey makes it unlikely that cetaceans would remain in the area for prolonged periods. Based on all of this information, the proposed project is not anticipated to affect annual rates of recruitment or survival for cetaceans in the area.

Ringed seals breed and pup in the Alaskan Beaufort Sea; however, the seismic survey will occur outside of the breeding and pupping seasons. The Beaufort Sea does not provide suitable habitat for the other three ice seal species for breeding and pupping. Based on this information, the proposed project is not anticipated to affect annual rates of recruitment or survival for pinnipeds in the area.

Of the nine marine mammal species for which take is authorized, one is listed as endangered under the ESA—the bowhead whale—and two are listed as threatened—ringed and bearded seals. Schweder *et al.* (2009) estimated the yearly growth rate for bowhead whales to be 3.2% (95% CI = 0.5–4.8%) between 1984 and 2003 using a sight-resight analysis of aerial photographs. There are currently no reliable data on trends of the ringed and bearded seal stocks in Alaska. The ribbon seal is listed as a species of concern under the ESA. Certain stocks or populations of gray, killer, and beluga whales and spotted seals are listed as endangered or are proposed for listing under the ESA; however, none of those stocks or populations occur in the activity area. There is currently no established critical habitat in the project area for any of these nine species.

Based on the analysis contained herein of the likely effects of the specified activity on marine mammals and their habitat, and taking into consideration the implementation of the required monitoring and mitigation measures, NMFS finds that the total marine mammal take from BP's 3D OBS seismic survey in Prudhoe Bay, Beaufort Sea, Alaska, will have a negligible impact on the affected marine mammal species or stocks.

Small Numbers

The requested takes authorized represent less than 1% of all populations or stocks (see Table 4 in this document). These take estimates represent the percentage of each species or stock that could be taken by Level B behavioral harassment if each animal is taken only once. The numbers of marine mammals taken are small relative to the affected species or stock sizes. In addition, the mitigation and monitoring measures (described previously in this document) required in the IHA are expected to reduce even further any potential disturbance to marine mammals. NMFS finds that small numbers of marine mammals will be taken relative to the populations of the affected species or stocks.

Impact on Availability of Affected Species or Stock for Taking for Subsistence Uses

Relevant Subsistence Uses

The disturbance and potential displacement of marine mammals by sounds from the seismic survey are the principal concerns related to subsistence use of the area. Subsistence remains the basis for Alaska Native culture and community. Marine mammals are legally hunted in Alaskan waters by coastal Alaska Natives. In rural Alaska, subsistence activities are often central to many aspects of human existence, including patterns of family life, artistic expression, and community religious and celebratory activities. Additionally, the animals taken for subsistence provide a significant portion of the food that will last the community throughout the year. The main species that are hunted include bowhead and beluga whales, ringed, spotted, and bearded seals, walruses, and polar bears. (As mentioned previously in this document, both the walrus and the polar bear are under the USFWS' jurisdiction.) The importance of each of these species varies among the communities and is largely based on availability.

Residents of the village of Nuiqsut are the primary subsistence users in the project area. The communities of Barrow and Kaktovik also harvest resources that pass through the area of interest but do not hunt in or near the Prudhoe Bay area. Subsistence hunters from all three communities conduct an annual hunt for autumn-migrating bowhead whales. Barrow also conducts a bowhead hunt in spring. Residents of all three communities hunt seals. Other subsistence activities include fishing, waterfowl and seaduck harvests, and hunting for walrus, beluga whales, polar bears, caribou, and moose.

Nuiqsut is the community closest to the seismic survey area (approximately 54 mi [87 km] southwest). Nuiqsut hunters harvest bowhead whales only during the fall whaling season (Long, 1996). In recent years, Nuiqsut whalers have typically landed three or four whales per year. Nuiqsut whalers concentrate their efforts on areas north and east of Cross Island, generally in water depths greater than 66 ft (20 m; Galginaitis, 2009). Cross Island is the principal base for Nuiqsut whalers while they are hunting bowheads (Long, 1996). Cross Island is located approximately 35 mi (56.4 km) east of the seismic survey area.

Kaktovik whalers search for whales east, north, and occasionally west of Kaktovik. Kaktovik is located approximately 120 mi (193 km) east of Prudhoe Bay. The western most reported harvest location was about 13 mi (21 km) west of Kaktovik, near 70°10′ N., 144°11′ W. (Kaleak, 1996). That site is about 112 mi (180 km) east of the proposed survey area.

Barrow whalers search for whales much farther from the Prudhoe Bay area—about 155+ mi (250+ km) to the west. Barrow hunters have expressed concerns about ''downstream'' effects to bowhead whales during the westward fall migration; however, BP will cease airgun operations prior to the start of the fall migration.

Beluga whales are not a prevailing subsistence resource in the communities of Kaktovik and Nuiqsut. Kaktovik hunters may harvest one beluga whale in conjunction with the bowhead hunt; however, it appears that most households obtain beluga through exchanges with other communities. Although Nuiqsut hunters have not hunted belugas for many years while on Cross Island for the fall hunt, this does not mean that they may not return to this practice in the future. Data presented by Braund and Kruse (2009) indicate that only 1% of Barrow's total harvest between 1962 and 1982 was of beluga whales and that it did not account for any of the harvested animals between 1987 and 1989.

Ringed seals are available to subsistence users in the Beaufort Sea year-round, but they are primarily hunted in the winter or spring due to the rich availability of other mammals in the summer. Bearded seals are primarily hunted during July in the Beaufort Sea; however, in 2007, bearded seals were harvested in the months of August and September at the mouth of the Colville River Delta, which is approximately 50+ mi (80+ km) from the proposed seismic survey area. However, this sealing area can reach as far east as Pingok Island, which is approximately 20 mi (32 km) west of the survey area. An annual bearded seal harvest occurs in the vicinity of Thetis Island (which is a considerable distance from Prudhoe Bay) in July through August. Approximately 20 bearded seals are harvested annually through this hunt. Spotted seals are harvested by some of the villages in the summer months. Nuiqsut hunters typically hunt spotted seals in the nearshore waters off the Colville River Delta. The majority of the more established seal hunts that occur in the Beaufort Sea, such as the Colville delta area hunts, are located a significant distance (in some instances 50 mi [80 km] or more) from the project area.

Potential Impacts to Subsistence Uses

NMFS has defined ''unmitigable adverse impact'' in 50 CFR 216.103 as: ''. . . an impact resulting from the specified activity: (1) That is likely to reduce the availability of the species to a level insufficient for a harvest to meet subsistence needs by: (i) Causing the marine mammals to abandon or avoid hunting areas; (ii) Directly displacing subsistence users; or (iii) Placing physical barriers between the marine mammals and the subsistence hunters; and (2) That cannot be sufficiently mitigated by other measures to increase the availability of marine mammals to allow subsistence needs to be met.''

Noise and general activity during BP's 3D OBS seismic survey have the potential to impact marine mammals hunted by Native Alaskan. In the case of cetaceans, the most common reaction to anthropogenic sounds (as noted previously) is avoidance of the ensonified area. In the case of bowhead whales, this often means that the animals divert from their normal migratory path by several kilometers. Helicopter activity also has the potential to disturb cetaceans and pinnipeds by causing them to vacate the area. Additionally, general vessel presence in the vicinity of traditional hunting areas could negatively impact a hunt. Native knowledge indicates that bowhead whales become increasingly ''skittish'' in the presence of seismic noise. Whales are more wary around the hunters and tend to expose a much smaller portion of their back when surfacing (which makes harvesting more difficult). Additionally, natives report that bowheads exhibit angry behaviors in the presence of seismic, such as tail-slapping, which translate to danger for nearby subsistence harvesters.

Plan of Cooperation or Measures to Minimize Impacts to Subsistence Hunts

Regulations at 50 CFR 216.104(a)(12) require IHA applicants for activities that take place in Arctic waters to provide a Plan of Cooperation or information that identifies what measures have been taken and/or will be taken to minimize adverse effects on the availability of marine mammals for subsistence purposes. BP signed the 2014 Conflict Avoidance Agreement (CAA) with the Alaska Eskimo Whaling Commission (AEWC), which is developed to minimize potential interference with bowhead subsistence hunting. BP also attended and participated in meetings with the AEWC on December 13, 2013, and additional meetings in 2014. The CAA describes measures to minimize any adverse effects on the availability of bowhead whales for subsistence uses.

The North Slope Borough Department of Wildlife Management (NSB–DWM) was consulted, and BP presented the project to the NSB Planning Commission in 2014. BP held meetings in the community of Nuiqsut to present the proposed project, address questions and concerns from community members, and provide them with contact information of project management to which they can direct concerns during the survey. During the NMFS Open-Water Meeting in Anchorage in 2013, BP presented their proposed projects to various stakeholders that were present during this meeting.

BP will continue to engage with the affected subsistence communities regarding its Beaufort Sea activities. As in previous years, BP will meet formally and/or informally with several stakeholder entities: the NSB Planning Department, NSB–DWM, NMFS, AEWC, Inupiat Community of the Arctic Slope, Inupiat History Language and Culture Center, USFWS, Nanuq and Walrus Commissions, and Alaska Department of Fish & Game.

Project information was provided to and input on subsistence obtained from the AEWC and Nanuq Commission at the following meetings:

• AEWC, October 17, 2013; and
• Nanuq Commission, October 17, 2013.

BP will implement several mitigation measures to reduce impacts on the availability of marine mammals for subsistence hunts in the Beaufort Sea. Many of these measures were developed from the 2013 CAA and previous NSB Development Permits. In addition to the measures listed next, BP will conclude all airgun operations by midnight on August 25 to allow time for the Beaufort Sea communities to prepare for their fall bowhead whale hunts prior to the beginning of the fall westward migration through the Beaufort Sea. Some of the measures mentioned next have been mentioned previously in this document:

• PSOs on board vessels are tasked with looking out for whales and other marine mammals in the vicinity of the vessel to assist the vessel captain in avoiding harm to whales and other marine mammals.;
• Vessels and aircraft will avoid areas where species that are sensitive to noise or vessel movements are concentrated;
• Communications and conflict resolution are detailed in the CAA. BP will participate in the Communications Center that is operated annually during the bowhead subsistence hunt;
• Communications with the village of Nuiqsut to discuss community questions or concerns including all subsistence hunting activities. Pre-project meeting(s) with Nuiqsut representatives will be held at agreed times with groups in the community of Nuiqsut. If additional meetings are requested, they will be set up in a similar manner;
• Contact information for BP will be provided to community members and distributed in a manner agreed at the community meeting;
• BP has contracted with a liaison from Nuiqsut who will help coordinate meetings and serve as an additional contact for local residents during planning and operations; and
• Inupiat Communicators will be employed and work on seismic source vessels. They will also serve as PSOs.

Unmitigable Adverse Impact Analysis and Determination

BP has adopted a spatial and temporal strategy for its Prudhoe Bay survey that should minimize impacts to subsistence hunters. First, BP's activities will not commence until after the spring hunts have occurred. Second, BP will conclude all airgun operations by midnight on August 25 prior to the start of the bowhead whale fall westward migration and any fall subsistence hunts by Beaufort Sea communities. Prudhoe Bay is not commonly used for subsistence hunts. Although some seal hunting co-occurs temporally with BP's seismic survey, the locations do not overlap. BP's presence will not place physical barriers between the sealers and the seals. BP will work closely with the closest affected communities and support Communications Centers and employ local Inupiat Communicators. Based on the description of the specified activity, the measures described to minimize adverse effects on the availability of marine mammals for subsistence purposes, and the required mitigation and monitoring measures, NMFS has determined that there will not be an unmitigable adverse impact on subsistence uses from BP's activities.

Endangered Species Act (ESA)

Within the project area, the bowhead whale is listed as endangered and the ringed and bearded seals are listed as threatened under the ESA. The NMFS Office of Protected Resources Permits and Conservation Division consulted with the NMFS Alaska Regional Office (AKRO) Protected Resources Division (PRD) on the issuance of an IHA under Section 101(a)(5)(D) of the MMPA because the action of issuing the IHA may affect threatened and endangered species under NMFS' jurisdiction. On June 10, 2014, NMFS AKRO PRD issued a Biological Opinion, which concluded that the issuance of an IHA to BP for the 3D OBS seismic survey is not likely to jeopardize the continued existence of the endangered bowhead whale, threatened Arctic subspecies of ringed seal, or the threatened Beringia distinct population segment of bearded seal. There is no critical habitat for any of these species in the survey area.

National Environmental Policy Act (NEPA)

NMFS prepared an EA that includes an analysis of potential environmental effects associated with NMFS' issuance of an IHA to BP to take marine mammals incidental to conducting a 3D OBS seismic survey program in the Beaufort Sea, Alaska. NMFS has finalized the EA and prepared a FONSI for this action. Therefore, preparation of an Environmental Impact Statement is not necessary.

Authorization

As a result of these determinations, NMFS has issued an IHA to BP for conducting a 3D OBS seismic survey in the Prudhoe Bay area of the Beaufort Sea, Alaska, during the 2014 open-water season, provided the previously mentioned mitigation, monitoring, and reporting requirements are incorporated.

Dated: June 25, 2014.

Perry F. Gayaldo,

Deputy Director, Office of Protected Resources, National Marine Fisheries Service.

[FR Doc. 2014–15238 Filed 6–27–14; 8:45 am]

BILLING CODE 3510–22–P

DEPARTMENT OF COMMERCE

National Oceanic and Atmospheric Administration

RIN 0648–XD188

Takes of Marine Mammals Incidental to Specified Activities; Taking Marine Mammals Incidental to Conductor Pipe Installation Activities at Harmony Platform in Santa Barbara Channel Offshore of California

AGENCY: National Marine Fisheries Service (NMFS), National Oceanic and Atmospheric Administration (NOAA), Commerce.

ACTION: Notice; proposed Incidental Harassment Authorization; request for comments.

SUMMARY: NMFS has received an application from ExxonMobil Production Company (ExxonMobil), a Division of ExxonMobil Corporation, for an Incidental Harassment Authorization (IHA) to take marine mammals, by harassment, incidental to installing six conductor pipes via hydraulic hammer driving at the Harmony Platform, Santa Ynez Production Unit, located in the Santa Barbara Channel offshore of California. Pursuant to the Marine Mammal Protection Act (MMPA), NMFS is requesting comments on its proposal to issue an IHA to ExxonMobil to incidentally harass, by Level B harassment only, 30 species of marine mammals during the specified activity.

DATES: Comments and information must be received no later than July 30, 2014.

ADDRESSES: Comments on the application should be addressed to Jolie Harrison, Supervisor, Incidental Take Program, Permits and Conservation Division, Office of Protected Resources, National Marine Fisheries Service, 1315 East-West Highway, Silver Spring, MD 20910. The mailbox address for providing email comments is *ITP.Goldstein@noaa.gov.* Comments sent via email, including all attachments, must not exceed a 25-megabyte file size. NMFS is not responsible for comments sent to addresses other than the one provided here.

Instructions: All comments received are a part of the public record and will

generally be posted to *http://www.nmfs.noaa.gov/pr/permits/incidental.htm#applications* without change. All Personal Identifying Information (for example, name, address, etc.) voluntarily submitted by the commenter may be publicly accessible. Do not submit Confidential Business Information or otherwise sensitive or protected information.

An electronic copy of the application may be obtained by writing to the address specified above, telephoning the contact listed below (see **FOR FURTHER INFORMATION CONTACT**) or visiting the Internet at: *http://www.nmfs.noaa.gov/pr/permits/incidental.htm#applications.* Documents cited in this notice may also be viewed, by appointment, during regular business hours, at the aforementioned address.

NMFS is also preparing an Environmental Assessment (EA) in accordance with the National Environmental Policy Act (NEPA) and will consider comments submitted in response to this notice as part of that process. The EA will be posted at the foregoing Internet site once it is finalized.

FOR FURTHER INFORMATION CONTACT: Howard Goldstein or Jolie Harrison, Office of Protected Resources, NMFS, 301–427–8401.

SUPPLEMENTARY INFORMATION:

Background

Sections 101(a)(5)(A) and (D) of the MMPA (16 U.S.C. 1361 *et seq.*), direct the Secretary of Commerce (Secretary) to allow, upon request, the incidental, but not intentional, taking of small numbers of marine mammals, by United States citizens who engage in a specified activity (other than commercial fishing) within a specified geographical region if certain findings are made and either regulations are issued or, if the taking is limited to harassment, a notice of a proposed authorization is provided to the public for review.

An authorization for the incidental takings shall be granted if NMFS finds that the taking will have a negligible impact on the species or stock(s), and will not have an unmitigable adverse impact on the availability of the species or stock(s) for subsistence uses (where relevant), and if the permissible methods of taking requirements pertaining to the mitigation, monitoring and reporting of such takings are set forth. NMFS has defined ''negligible impact'' in 50 CFR 216.103 as ''. . . an impact resulting from the specified activity that cannot be reasonably expected to, and is not reasonably likely to, adversely affect the species or stock through effects on annual rates of recruitment or survival.''

Except with respect to certain activities not pertinent here, the MMPA defines ''harassment'' as: Any act of pursuit, torment, or annoyance which (i) has the potential to injure a marine mammal or marine mammal stock in the wild [Level A harassment]; or (ii) has the potential to disturb a marine mammal or marine mammal stock in the wild by causing disruption of behavioral patterns, including, but not limited to, migration, breathing, nursing, breeding, feeding, or sheltering [Level B harassment].

Summary of Request

On March 3, 2014, NMFS received an application from ExxonMobil for the taking of marine mammals incidental to installing six conductor pipes by hydraulic hammering at the Harmony Platform, Santa Ynez Production Unit, in the Santa Barbara Channel offshore of California. Along with the IHA application, NMFS received an addendum titled ''Assessment of Airborne and Underwater Noise from Pile Driving Activities at the Harmony Platform.'' NMFS determined that the application was adequate and complete on April 28, 2014.

The proposed project's estimates dates are from mid-August to mid-November 2014, but the proposed action could occur anytime within a 12-month period from the effective date of the proposed IHA. Acoustic stimuli (i.e., increased underwater and airborne sound) generated during the conductor pipe installation activities are likely to result in the take of marine mammals. Take, by Level B harassment only, of 30 species is anticipated to result from the proposed activities.

Description of the Proposed Specified Activity

Overview

ExxonMobil proposes to install six conductor pipes by hydraulic hammering at the Harmony Platform, Santa Ynez Production Unit, in the Santa Barbara Channel offshore of California.

Dates and Duration

ExxonMobil estimates that the proposed conductor pipe installation activities would occur from mid-August to mid-November 2014, but the proposed activities could occur anytime within a 12-month period from the effective date of the proposed IHA. Precise scheduling is not presently available due to logistical and regulatory uncertainties. ExxonMobil has requested the IHA for an August start date to allow for flexibility in scheduling operations, equipment, and personnel, as well as to ensure sufficient time to arrange for monitoring field services. The estimated duration of the proposed project is 91 days. Under normal working conditions, the proposed project is expected to include approximately 84 days of installation activity on the Harmony Platform bounded by 7 days of project mobilization/demobilization activities. It would take approximately 14 days to install each conductor pipe (6 conductors × 14 days = 84 days). Figure 2–1 of the IHA application includes a timeline of proposed activities over the approximate three month duration. Of the estimated 84 days, hammer driving would occur over 30 intermittent intervals of 2.5 to 3.3 hours each for a combined total of 4.125 days, or 5% of the entire proposed project (3.3 hours × 5 joints × 6 conductors = 99 hours or 4.125 days).

Specified Geographic Region

Harmony Platform is located in the Santa Barbara Channel, which is approximately 100 km (54 nmi) long and 40 km (21.6 nmi) wide, situated between the Channel Islands and the east-west trending coastline of California. The Santa Barbara Channel is the site of several other producing oil fields, including Ellwood, Summerland, Carpinteria offshore, and Dos Cuadras. The Santa Barbara basin is the prominent feature of the Santa Barbara Channel, with sill depths of approximately 250 m (820.2 ft) and 450 m (1,467.4 ft) at eastern and western entrances, respectively, with shallow (60 m or 196.9 ft) inter-island passages to the south. Harmony Platform's geographical position is 34° 22′ 35.906″ North, 120° 10′ 04.486″ West, at a water depth of 366 m (1,200.8 ft) on the continental slope below a relatively steep (7.5%) descent. The Harmony Platform is 43.5 km (27 miles) southwest of Santa Barbara, California (see Figure 1 of the IHA application). It is 4.7 km (2.5 nmi) from the shelf break, which is typically defined at the 100 m (328.1 ft) isobaths (USGS, 2009). It is 3.3 km (1.8 nmi) from the nearest buffered 200 m (656.2 ft) contour, which has been noted for its association with higher recorded densities of cetacean species (Redfern *et al.,* 2013). It is also located 10 to 15 km (5.4 to 8.1 nmi) north of a common traffic route used by vessels to access the ports of Long Beach and Los Angeles. Figure 1–1 of the IHA application includes the location of the Harmony Platform, general site

bathymetry, and Santa Barbara area boundaries.

Site Bathymetry and Sediment Physical Characteristics—Harmony Platform is located below a relatively steep (7.5%) descent from the shelf margin, which is defined by the 100 m contour in this area (USGS, 2009). It sits at a water depth of 366 m, just above the northern rim of the Santa Barbara Basin which is roughly confined by the 400 m (1,312.3 ft) contour, descending to depths exceeding 600 m (1,968.5 ft). Depths below the Harmony Platform are defined by a gentle slope (ca. 1%), which extends to the 600 m contour at the basin maximum. To the west of the platform, the slope attenuates to about 3% grade between 100 m and 400 m contours, near the western sill of the basin. To the east, the slope becomes steeper, approaching 15% grade between 100 m and 400 m contours, at 20 km (10.8 nmi) east of the platform.

Harmony Platform is located on unconsolidated fine-grained silty-clay and clayey-silt sediments. Table 2–1 of the IHA application describes the sediment physical characteristics and geoacoustical profile in the vicinity of the Harmony Platform. These sediments are typical of slope depths proceeding into the basin where sediments may be 2,000 m (6,561.7 ft) thick. Stein (1995) reported similar sediment grain characteristics from core segments penetrating 196 m (643.1 ft) below the sediment surface at a basin depth of 565 m (1,853.7 ft). Sediments were primarily of terrigeneous origin, dominated by quartz and clay minerals montmorillonite and illite. These sediments are similar in quartz content and clay-mineral composition to suspended sediment introduced by the Santa Clara River, which has an average annual sediment load of about 600,000 m^3 (2.1×10^7 ft^3) (Brownlee and Taylor, 1981). These turbid sediment plumes, arising primarily from the Santa Clara River to the east and from Santa Maria and Santa Inez Rivers north of Point Conception, may extend more than 5 km (2.7 nmi) from shore and inshore from Harmony Platform during periods of heavy runoff.

Sediments at Harmony Platform and throughout the Santa Barbara Channel slopes and basin reflect terrigeneous origins from coastal watersheds (mainly the Santa Clara River), with relatively minor inclusions of marine biogenic origin (e.g., calcareous and diatomaceous fractions). Shell fragment debris dislodged from the jacket structure during peak storm wave surges and from periodic maintenance has been observed around the periphery of the jacket in ROV surveys, but significant debris was not observed at the conductor pipe locations designated from this project. No known hard substrates have been identified by the former Minerals Management Service and NMFS surveys within 5 km of the Harmony Platform (Keller *et al.,* 2005). Extending from shore to the 100 m shelf break, hard substrate is common, supporting extensive kelp beds at depths less than 20 m (65.6 ft), on cobbles and boulders. Further offshore, at depths of about 65 m (213.3 ft) to the shelf break, regions of folded ridges and pinnacles up to 3 m (9.8 ft) in relief have been recorded (USGS, 2009).

Hydrodynamics and Water Column Physical Properties—Hydrodynamic and seawater properties at the Harmony Platform are complex as a result of shifting wind and current patterns that occur in the Santa Barbara Channel in response to changing coastline orientation at Point Conception (Beckenbach, 2004). The Santa Barbara Channel is a cross-roads for large scale water masses moving along the California coast. Waters from north of Point Conception are cooled by coastal upwelling as they move southward. Most of these waters pass outside the Channel Islands but some enter the Santa Barbara Channel at its west end. Warmer waters from the south are driven poleward by the Southern California Countercurrent. Mean nearshore circulation in the entire Southern California Bight is dominated by this current (Hickey, 1993), which enters the Santa Barbara Channel from the east. Water mass properties are determined by relative inputs to the Santa Barbara Channel from eastern and western entrances.

Hydrodynamics—Aud *et al.* (1999) determined that transport from the east accounted for 60% of the water entering the Santa Barbara Channel with 33% originating from the southern portion of the western entrance and the remaining 7% from southern inter-island passages. These contrasting source waters mix in the Santa Barbara Channel, often forming complex patterns visible in satellite images of sea surface temperature. They represent the more persistent large scale movement of water masses, which are driven by dynamic processes on scales much larger than the Santa Barbara Channel. Current speed fluctuations exhibit significant variation, typically ranging from 10 to 40 cm s^{-1} (Hickey, 1992), extending to a depth of 200 m (656.2 ft), and tending to follow longshore isobaths. Seasonal mean currents over the continental slope are 20 to 30 cm s^{-1}. However, surface circulation may be driven by winds that create rapidly developing high energy surface flows that vary in direction over scales of several kilometers. In the Santa Barbara Channel, wind stress from the northwest creates surface flows characterized by cyclonic, and occasionally anti-cyclonic, flow vortices which propagate westward. These occur intermittently throughout the year, and may last for months (Beckenbach, 2004; Oey, 2001). Vertical upwelling along the coast is also a feature of the water mass, occurring primarily from spring through fall (Harms and Winant, 1998). Inlet water mass movement in the vicinity of Harmony Platform is from west to east, extending to basin sill depth, with highly variable patterns of flow at the surface under the periodic influence of gyre vortices lasting from days to months, meandering from east to west, typically from spring to fall.

Water Column Physical Properties—Seasonal changes in water column stability (density structure) result from changes in temperature and salinity that occur seasonally from air-sea surface interactions, and from periodic fluctuations in relative contributions of different source waters (e.g., eastern and western flows). The water column is density stratified as temperatures decline and salinity increases with depth. Seasonal effects are evident with the strongest density gradient occurring during summer months, primarily within the upper 25 m (82 ft). Water column profiles of salinity, temperature, and calculated sound speed are illustrated in Figure 2–2 of the IHA application. Temperatures range from approximately 13 to 16.5° Celsius (C) (55.4 to 61.7° Fahrenheit [F]) at the surface, become nearly isothermal (9 to 9.5° C or 48.2 to 49.1° F) at 150 m (492.1 ft) depth, likely varying little to the platform depth of 366 m (1,200.8 ft). Seasonal salinities varied little, ranging from about 33.3 to 33.7% at the surface to 34 to 34.1% to 150 m depth. Figure 2–2 of the IHA application shows salinity, temperature, and underwater sound speed profiles in the vicinity of the Harmony Platform derived from the U.S. Naval Oceanographic Office's Generalized Digital Environmental Model (GDEM) database. The profile for sound speed correlates strongly with temperature, which is the main determinant of water density structure.

Detailed Description of the Proposed Specified Activity

ExxonMobil propose to install six conductor pipes by hydraulic hammering at Harmony Platform. The proposed conductor pipe installation activities are estimated to occur from mid-August to mid-November 2014, but

the proposed action could occur anytime within a 12-month period from the effective date of the proposed IHA. Harmony Platform is located 10 kilometers (km) (5.4 nautical miles [nmi]) off the coast of California, between Point Conception and the City of Santa Barbara. Harmony Platform is one of three offshore platforms in ExxonMobil's Santa Ynez Production Unit, and is located in the Hondo field (Lease OCS–P 0190) at a water depth of 336 meters (1,200.8 ft). Harmony Platform was installed on June 21, 1989 with the sole purpose of producing crude oil and gas condensate. It began production of crude oil, gas and gas condensate on December 30, 1993. A conductor pipe is installed prior to the commencement of drilling operations for oil and gas wells. It provides protection, stability/structural integrity, and a conduit for drill cuttings and drilling fluid to the platform. It also prevents unconsolidated sediment from caving into the wellbore, and provides structural support for the well loads. Drilling activities are currently ongoing at Harmony Platform utilizing the existing conductors and wells. The platform jacket structure (see Figure 1–2 of the IHA application) currently has conductors installed in 51 out of 60 slots, as approved by the Bureau of Ocean Energy Management (BOEM, formally the Minerals Management Service [MMS]) in the original Development Production Plan. Addition of eight straight conductors at the Harmony Platform was approved by the Bureau of Safety and Environmental Enforcement (BSEE) on February 11, 2013 to maintain current production levels from the existing platform. Conductor installation with a hydraulic hammer is consistent with approved development plans, and is the same method that was used to install conductors on all three Santa Ynez Production Unit platforms from 1981 (Hondo) through 1993 (Harmony and Heritage). Pile-driving the conductors are the only proven installation method that enables management of potential interferences with the existing platform infrastructure that would also reach the target depth. Non-pile-driving conductor installation methods are not deemed feasible at this time due to increased risk to platform structural integrity, offset well collision, and shallow-hole broaching.

The total length of a single conductor pipe is approximately 505 m (1,656.8 ft). Each conductor consists of multiple sections of 66.04 centimeter (cm) (26 inch [in]) diameter steel pipe that would be sequentially welded end-to-end from an upper deck of the platform (see Figure 1–2 of the IHA application), and lowered into the 366 m water column through metal rings (conductor guides) affixed to the jacket structure that orient and guide the conductor. Once the conductor reaches the sediment surface, gravity-based penetration (i.e., the conductor would penetrate the seabed under its own weight) is expected to reach approximately 30 m (98.4 ft) below the seabed. A hydraulic hammer (S–90 IHC) with a manufacturer's specified energy range of 9 to 90 kiloJoules (kJ) would be located on the drill deck and used to drive the conductor to a target depth of approximately 90 to 100 m (295.3 to 328.1 ft) below the seabed; therefore, only roughly 60 m (196.9 ft) of each 505 m (1,656.8 ft) long conductor pipe would require hydraulic driving. The S–90 IHC hydraulic hammer would sit on the conductor throughout pile-driving operations, but a ram internal to the hammer would stroke back and forth using hydraulic pressure to impart energy to the conductor. No physical dropping of a weight would be employed to drive the conductor.

The S–90 IHC hydraulic hammer has an estimated blow rate of about 46 blows per minute. The portion of a complete conductor that must be actively driven (hammered) into the seafloor consists of 5 to 7 sections, which are sequentially welded end-to-end. Setup and welding would take 3.5 to 7.3 hours per section, mostly depending on the type of welding equipment used (e.g., automated welder). Hammer pile-driving would take an estimated 2.5 to 3.3 hours for each section, depending primarily on sediment physical properties, which affect penetration rate. Complete installation of each conductor is estimated at approximately 14 days based on 24-hour (continuous) operations. Table 1–1 of the IHA application presents a summary of driving activities and estimated number of joints [requiring welding] for each conductor pipe). Figure 1–3 of the IHA application shows the estimated time in days for each of these activities that are required to install a single conductor pipe. ExxonMobil conservatively assumes that active hammering would be 3.3 hours, followed by 7.3 hours of hammer downtime (i.e., ''quiet time,'' a time at which other activities are performed in preparation for the next section of pile) over approximately 53 hours (2.2 days) of the approximately 14 days required to install one conductor pipe. This schedule produces 4.125 days (99 hours) of cumulated hammer driving for all six conductors over the project duration. Figure 1–4 depicts the 3.3 hour pile-drive/7.3 hour downtime cycle for an isolated 24-hour period, showing a maximum of 9.4 hours of hammer driving. In the event that efficiencies produce a 2.5 hour drive/3.5 hour downtime cycle, a maximum of 10 hours of hammer pile-driving could occur in a single 24-hour period. The complete installation of the conductor pipes is estimated at 14 days of continuous operation.

TABLE 1—SUMMARY OF PROPOSED INSTALLATION ACTIVITIES AND ASSOCIATED CHARACTERISTICS OF EACH CONDUCTOR PIPE AT HARMONY PLATFORM.

Conductor pipe activity	Pipe length (m)	Estimates number of joints	Pile-driving required	Estimated number of days [3]
Installation level to sea level	49 (160.8 ft)	4	No	2
Sea level to seafloor	366 (1,200.8 ft)	28	No	5.6
From 0 to ~30 m below seafloor	30 [1] (98.4 ft)	3	No	0.9
From ~30 m to ~90 m below seafloor	60 (196.9 ft)	5 to 7	Yes [2]	0.69
Hammer downtime	NA	NA	No	1.52
Clean up and completion	NA	NA	No	3.6

[1] Estimated range of gravity-based penetration.
[2] See Figure 1–4 of the IHA application.
[3] See Figure 1–3 of the IHA application.

Platform Specifications

The Harmony Platform is owned and operated by ExxonMobil and has a personnel capacity of 132 people. The Harmony Platform, located in the Santa Barbara Channel, was installed on June 21, 1989 and first began production on December 30, 1993. The lease location for the Santa Ynez Production Unit is OCS–P0190. Support vessels and helicopters are used routinely as part of normal platform operations and would be utilized to provide necessary support for proposed activities during the project. There are no anticipated changes in logistics from current operations associated with the proposed project. The contractors responsible for protected species and noise monitoring during the proposed project would use existing, routine transportation vessels.

The Harmony Platform also has a minimum of two locations as likely observation stations from which Protected Species Observers (PSO) would watch for marine mammals before and during the proposed conductor pipe installation activities. The station on the upper deck has an approximately 360° view around the Harmony Platform to monitor the Level B harassment buffer zone. At least one station on the lower deck would monitor the Level A harassment exclusion zone. More details of the Harmony Platform can be found in the IHA application and online at: *http://www.boem.gov/BOEM-Newsroom/Offshore-Stats-and-Facts/Pacific-Region/Pacific-Platform-Operators.aspx#Exxon.*

Acoustic Source Specifications

Predicted Sound Levels for the Pile-Driving Activities

The predicted in-water sound field during proposed impact hammer pile-driving of the conductor pipes at the Harmony Platform were modeled by JASCO Applied Sciences, Ltd (JASCO). See JASCO's ''Assessment of Airborne and Underwater Noise from Pile-Driving Activities at the Harmony Platform'' for a detailed description of ExxonMobil's modeling for this proposed action, which is provided as an addendum to the IHA application. NMFS refers the reviewers to that document for additional information. Sound levels emitted from the conductor pipe were estimated using underwater recordings (Illingworth and Rodkin, 2007) for impact pile-driving of 61 to 76.2 centimeter (cm) (24 to 30 inch [in]) steel piles (i.e., pipes) back calculated to 1 m from the sound source, assuming a combination of cylindrical and spherical spreading. Sound level at the source was then scaled to the anticipated energy range of 9 and 90 kJ for the impact hammer and coupled to an acoustic model of a representative steel pipe (Claerbout, 1976; Reinhall and Dahl, 2011). Only modeled results associated with the maximum hammer energy of 90 kJ were used to estimate potential impacts and calculate take.

Each 505 m (1,656.8 ft) long conductor pipe is assembled from 12 m (39.4 ft) long sections welded end-to-end, and then lowered from a top deck of the platform through 366 m (1,200.8 ft) of water until the pipe encounters the seafloor and penetrates approximately 60 m of the seabed under its own weight. Because of the extremely long length of the conductor pipe compared to those represented in the literature, the pipe was modeled as a line array of 12 sources at 30 m (98.4 ft) intervals (i.e., over 360 m [1,181.1 ft] pipe length). This procedure produced a more realistic estimates of the maximum sound SPL (rms) from impact hammer pile-driving of Harmony Platform's conductor pipes, compared with a single sound source representation (e.g., mid-pipe) that is generally used for shorter pipes (piles). At the maximum hammer energy of 90 kJ, the corresponding maximum sound pressure throughout the water column is estimated at 202 dB (rms) at 1 m from the conductor pipe (see Figure 6–1 of the IHA application). The predicted sound levels were used by ExxonMobil and NMFS to determine the buffer and exclusion zones for the proposed conductor pipe installation activities.

Table 2 (Table 6–4 of the IHA application) summarizes the modeled distances at which in-water (160, 180, and 190 dB [rms]) and in-air (90 and 100 dB [rms]) sound levels are expected to be received from the impact hammer pile-driving operating at a water depth of 366 m. For in-water noise, sound propagation and corresponding maximum distances were modeled using JASCO's model Full Waveform Range-dependent Acoustic Model (FWRAM), which is based on a modified version of the U.S. Navy's parabolic Range-dependent Acoustic Model (RAM) to account for an elastic seabed. FWRAM enhances RAM by accounting for seabed dissipation of acoustic energy and incorporates local bathymetry, seafloor geoacoustics, and underwater sound speed profiles. Physical data specific to the Harmony Platform location were used by JASCO to model sound propagation (see Table 2–1 and Figure 202 of the IHA application). Representative data include sediment grain size and density, and water column salinity/temperature, as these properties affect seafloor geoacoustic properties and in-water sound speed, respectively. Routines in FWRAM were used to model sound as SPL (rms) over water column depth and distance from the conductor pipe based on maximum hammer energy (90 kJ). Figure 6–2 of the IHA application shows water depth versus distance from the conductor pipe (sound source), where the 160 dB isopleth represents the maximum distance for in-water Level B harassment for marine mammals. The maximum distances are generally higher in the top 100 m (328.1 ft) of the water column.

To evaluate potential seasonal effects on sound propagation in the water column, year-round conditions using selected monthly averages (i.e., January, April, August, and November) of water column salinity and temperature were modeled along one azimuth, south of the Harmony Platform. Results showed no significant seasonal variations (<1 dB [rms]) up to 1 km (0.5 nmi) from the Harmony Platform. Potential differences in sound propagation with direction from the Harmony Platform also were investigated by JASCO. There were not significant differences in the sound field modeled for four equally spaced transects out to 1 km from the Harmony Platform.

For in-air noise, JASCO used in-air sound levels calculated from recordings of pipe-driving tests performed by ExxonMobil using a 90 kJ energy hammer that is planned for use on this proposed action. The tests used the S–90 hammer at 90% of its maximum energy with a steel pipe of unknown size. The estimated sound levels represent A-weighted received levels, calculated at six distances between 0 and 12 m (0 to 39.4 ft), and indicated a source level of 132.4 dB re 20 μPa (rms) (A-weighted). Calculated distances from the sound source to the Level B harassment threshold for in-air noise (SPL [rms]) using spherical spreading loss are shown below and in Table 6–4 of the IHA application. Using the JASCO model, Table 2 (below) shows the distances at which three rms underwater sound levels and two rms in-air sound levels are expected to be received from the impact hammer pile-driving activities. The 180 and 190 dB re 1 μPam (rms) distances are the safety criteria (i.e., exclusion zone) for potential Level A harassment as specified by NMFS (2000) and are applicable to cetaceans and pinnipeds, respectively. If marine mammals are detected within or about to enter the appropriate exclusion zone, the impact hammer pile-driver would be shut-down immediately.

TABLE 2—MODELED MAXIMUM DISTANCES TO WHICH IN-WATER SOUND LEVELS ≥190, 180 AND 160 dB re 1 μPa (rms) AND IN-AIR SOUND LEVELS ≥90 (FOR HARBOR SEALS) AND 100 dB re 20 μPa (rms) (FOR ALL OTHER PINNIPEDS) COULD BE RECEIVED DURING THE PROPOSED PILE-DRIVING ACTIVITIES (BASED ON MAXIMUM HAMMER ENERGY OF 90 kJ) IN THE SANTA BARBARA CHANNEL OFF THE COAST OF CALIFORNIA

Source	Water depth (m)	Predicted RMS radii distances (m) for in-water pile-driving			Modeled RMS radii distances (m) for in-air pile-driving	
		160 dB	180 dB	190 dB	90 dB	100 dB
90 kJ Impact Hammer Pile-Driver	366	325 (1,066.3 ft)	10 (32.8 ft)	3.5 (11.5 ft)	123 (403.5 ft)	41 (134.5 ft)

NMFS expects that acoustic stimuli resulting from the proposed impact hammer pile-driving associated with the conductor pipe installation activities has the potential to harass marine mammals.

Description of the Marine Mammals in the Area of the Proposed Specified Activity

The marine mammals that generally occur in the proposed action area belong to four taxonomic groups: Mysticetes (baleen whales), odontocetes (toothed whales), pinnipeds (seals and sea lions), and fissipeds (sea otters). The marine mammal species that potentially occur within the Pacific Ocean in proximity to the proposed action area in the Santa Barbara Channel off the coast of California (ranging from Point Conception and south, including the entire Southern California Bight) include 30 species of cetaceans (whales, dolphins, and porpoises) and 6 species of pinnipeds. The southern sea otter (*Enhydra lutris nereis*) is listed as threatened under the ESA and is managed by the U.S. Fish and Wildlife Service and is not considered further in this proposed IHA notice.

Marine mammal species listed as threatened or endangered under the U.S. Endangered Species Act of 1973 (ESA; 16 U.S.C. 1531 *et seq.*), includes the North Pacific right (*Eubalaena japonica*), humpback (*Megaptera novaeangliae*), sei (*Balaenoptera borealis*), fin (*Balaenoptera physalus*), blue (*Balaenoptera musculus*), and sperm (*Physeter macrocephalus*) whale as well as the Guadalupe fur seal (*Arctocephalus townsendi*). Of those threatened and endangered species, the humpback, sei, fin, blue, and sperm whale are likely to be encountered in the proposed action area.

Cetaceans occur throughout the Santa Barbara Channel proposed action area, including nearby the Harmony Platform, from the surf zone to open ocean environments beyond the Channel Islands. Distribution is influenced by a number of factors, but primary among these are patterns of major ocean currents, bottom relief, and sea surface temperature. These physical oceanographic conditions affect prey abundance, which may attract marine mammals during periods of high productivity, and vice versa. Water movement is near continuous, varying seasonally, and is generally greatest from late spring to early fall in response to varying wind stress. This phenomenon is much greater in the western Santa Barbara Channel. This near continuous movement of water from the ocean bottom to the surface creates a nutrient-rich, highly productive environment for marine mammal prey (Jefferson *et al.,* 2008). Most of the large cetaceans are migratory, but many small cetaceans do not undergo extensive migrations. Instead, they undergo local or regional dispersal, on a seasonal basis or in response to food availability. Population centers may shift on spatial scales exceeding 100 km (54 nmi) over small time scales (days or weeks) (Dailey and Bonnell, 1993).

Systematic surveys (1991 to 1993, 1996, 2001, 2005) in the southern California region have been carried out via aircraft (Carretta and Forney, 1993) and vessel (Ferguson and Barlow, 2001; Barlow, 2003) by NMFS. In addition, a vessel survey in the U.S. Exclusive Economic Zone (EEZ), and out to 556 km (300.2 nmi) offshore of California, Oregon, and Washington, was conducted in the summer and fall of 2005 by NMFS (Forney, 2007). Many other regional surveys have also been conducted (Carretta, 2003). Becker (2007) analyzed data from vessel surveys conducted since 1986, and compiled marine mammal densities. There are 30 cetacean and 6 pinniped species with ranges that are known to occur in the Eastern North Pacific Ocean waters of the project area. These include the North Pacific right whale, Bryde's whale (*Balaenoptera edeni*), dwarf sperm whale (*Kogia sima*), harbor porpoise (*Phocoena phocoena*), Steller sea lion (*Eumatopias jubatus*), and Guadalupe fur seal. However, these species are extremely rare, found in the Channel Islands, or are primarily found north or south of the Santa Barbara Channel, and are unlikely to be found in the proposed action area. The harbor porpoise occurs north of Point Conception, California. Bryde's whales are extremely rare in the Southern California Bight, with fewer than ten confirmed sightings from August 2006 to September 2010 (Smultea *et al.,* 2012). Guadalupe fur seals are most common at Guadalupe Island, Mexico, which is their primary breeding ground (Melin and Delong, 1999). Although adult and juvenile males have been observed at San Miguel Island, California, since the mid-1960's, and in the late 1990's a pup was born on the islands (Melin and Delong, 1999), more recent sightings are extremely rare. These species are not considered further in this document. Table 3 (below) presents information on the occurrence, abundance, distribution, population status, and conservation status of the species of marine mammals that may occur in the proposed project area during August to November 2014.

TABLE 3—THE HABITAT, OCCURRENCE, RANGE, REGIONAL ABUNDANCE, AND CONSERVATION STATUS OF MARINE MAMMALS THAT MAY OCCUR IN OR NEAR THE PROPOSED PIPE INSTALLATION PROJECT AREA OFF THE COAST OF CALIFORNIA IN THE PACIFIC OCEAN

[See text and Tables 3–1 in ExxonMobil's IHA application for further details]

Species	Habitat	Occurrence	Range	Best population estimate (minimum) [1]	ESA [2]	MMPA [3]
Mysticetes:						
North Pacific right whale (*Eubalaena japonica*).	Coastal and pelagic.	Rare	North Pacific Ocean between 20 to 60° North.	NA (26)—Eastern North Pacific stock.	EN	D.
Gray whale (*Eschrichtius robustus*).	Coastal and shelf	Transient during seasonal migrations.	North Pacific Ocean, Gulf of California to Arctic—Eastern North Pacific stock.	19,126 (18,107)—Eastern North Pacific stock. 155 (142)—Western North Pacific population.	DL—Eastern North Pacific stock. EN—Western North Pacific population.	NC—Eastern North Pacific stock. D—Western North Pacific population.
Humpback whale (*Megaptera novaeangliae*).	Pelagic, nearshore waters, and banks.	Seasonal, sightings near northern Channel Islands.	Cosmopolitan	1,918 (1,876)—California/Oregon/Washington (CA/OR/WA) stock.	EN	D.
Minke whale (*Balaenoptera acutorostrata*).	Pelagic and coastal.	Less common in summer, small number around northern Channel Islands.	Tropics and sub-tropics to ice edges.	478 (202)—CA/OR/WA stock.	NL	NC.
Bryde's whale (*Balaenoptera edeni*).	Pelagic and coastal.	Rare, infrequent summer off California.	Tropical and sub-tropical zones between 40° North and 40° South.	NA	NL	NC.
Sei whale (*Balaenoptera borealis*).	Primarily offshore, pelagic.	Rare, infrequent summer off California.	Tropical to polar zones, favor mid-latitude temperate areas.	126 (83)—Eastern North Pacific stock.	EN	D.
Fin whale (*Balaenoptera physalus*).	Continental slope, pelagic.	Year-round presence	Tropical, temperate, and polar zones of all oceans.	3,051 (2,598)—CA/OR/WA stock.	EN	D.
Blue whale (*Balaenoptera musculus*).	Pelagic, shelf, coastal.	Seasonal, arrive April to May, common late-summer to fall off Southern California.	Tropical waters to pack ice edges.	1,647 (1,551)—Eastern North Pacific stock.	EN	D.
Odontocetes:						
Sperm whale (*Physeter macrocephalus*).	Pelagic, deep sea.	Common year-round, more likely in waters >1,000 m.	Tropical waters to pack ice edges.	971 (751)—CA/OR/WA stock.	EN	D.
Pygmy sperm whale (*Kogia breviceps*).	Pelagic, slope	Seaward of 500 to 1,000 m, Limited sightings in Southern California Bight.	Tropical to warm temperate zones (temperate preference).	579 (271)—CA/OR/WA stock.	NL	NC.
Dwarf sperm whale (*Kogia sima*).	Deep waters off the shelf.	Rare	Tropical to warm temperate zones (warmer preference).	NA—CA/OR/WA stock.	NL	NC.
Baird's beaked whale (*Berardius bairdii*).	Pelagic	Primarily along continental slope late spring to early fall.	North Pacific Ocean and adjacent seas.	847 (466)—CA/OR/WA stock.	NL	NC.
Cuvier's beaked whale (*Ziphius cavirostris*).	Pelagic	Possible year-round occurrence.	Cosmopolitan	6,950 (4,481)—CA/OR/WA stock.	NL	NC.
Blainville's beaked whale (*Mesoplodon densirostris*).	Pelagic	Rare, continental slope region, generally seaward of 500 to 1,000 m depth.	Temperate and tropical waters worldwide.	694 (389)—*Mesoplodon* spp. CA/OR/WA stock.	NL	NC.
Perrin's beaked whale (*Mesoplodon perrini*).	Pelagic	Rare, continental slope region, generally seaward of 500 to 1,000 m depth.	North Pacific Ocean	694 (389)—*Mesoplodon* spp. CA/OR/WA stock.	NL	NC.
Lesser beaked whale (*Mesoplodon peruvianis*).	Pelagic	Rare, continental slope region, generally seaward of 500 to 1,000 m depth.	Temperate and tropical waters Eastern Pacific Ocean.	694 (389)—*Mesoplodon* spp. CA/OR/WA stock.	NL	NC.
Stejneger's beaked whale (*Mesoplodon stejnegeri*).	Pelagic	Rare, continental slope region, generally seaward of 500 to 1,000 m depth.	North Pacific Ocean	694 (389)—*Mesoplodon* spp. CA/OR/WA stock.	NL	NC.
Ginkgo-toothed beaked whale (*Mesoplodon ginkgodens*).	Pelagic	Rare, continental slope region, generally seaward of 500 to 1,000 m depth.	Temperate and tropical waters Indo-Pacific Ocean.	694 (389)—*Mesoplodon* spp. CA/OR/WA stock.	NL	NC.
Hubbs' beaked (*Mesoplodon carlhubbsi*).	Pelagic	Rare, continental slope region, generally seaward of 500 to 1,000 m depth.	North Pacific Ocean	694 (389)—*Mesoplodon* spp. CA/OR/WA stock.	NL	NC.

TABLE 3—THE HABITAT, OCCURRENCE, RANGE, REGIONAL ABUNDANCE, AND CONSERVATION STATUS OF MARINE MAMMALS THAT MAY OCCUR IN OR NEAR THE PROPOSED PIPE INSTALLATION PROJECT AREA OFF THE COAST OF CALIFORNIA IN THE PACIFIC OCEAN—Continued

[See text and Tables 3–1 in ExxonMobil's IHA application for further details]

Species	Habitat	Occurrence	Range	Best population estimate (minimum) [1]	ESA [2]	MMPA [3]
Killer whale (*Orcinus orca*).	Pelagic, shelf, coastal, pack ice.	Varies on inter-annual basis, likely in winter (January to February).	Cosmopolitan	240 (162)—Eastern North Pacific Offshore stock. 346 (346)—Eastern North Pacific Transient stock.. 354 (354)—West Coast Transient stock.	NL	NC.
Short-finned pilot whale (*Globicephala macrorhynchus*).	Pelagic, shelf, coastal.	Uncommon, more common before 1982.	Warm temperate to tropical waters, ~50° North to 40° South.	760 (465)—CA/OR/WA stock.	NL	NC.
Bottlenose dolphin (*Tursiops truncatus*).	Offshore, inshore, coastal, estuaries.	Offshore stock—Year-round presence. Coastal stock—Limited, small population within 1 km of shore.	Tropical and temperate waters between 45° North and South.	1,006 (684)—CA/OR/WA Offshore stock. 323 (290)—California Coastal stock.	NL	NC.
Striped dolphin (*Stenella coeruleoalba*).	Off continental shelf.	Occasional visitor	Tropical to temperate waters, 50° North to 40° South.	10,908 (8,231)—CA/OR/WA stock.	NL	NC.
Short-beaked common dolphin (*Delphinus delphis*).	Shelf, pelagic, seamounts.	Common, more abundant in summer.	Tropical to temperate waters of Atlantic and Pacific Ocean.	411,211 (343,990)—CA/OR/WA stock.	NL	NC.
Long-beaked common dolphin (*Delphinus capensis*).	Inshore	Common, more inshore distribution, year-round presence.	Nearshore and tropical waters.	107,016 (76,224)—California stock.	NL	NC.
Pacific white-sided dolphin (*Lagenorhynchus obliquidens*).	Offshore, slope	Common, year-round, more abundant November to April.	Temperate waters of North Pacific Ocean.	26,930 (21,406)—CA/OR/WA, Northern and Southern stock.	NL	NC.
Northern right whale dolphin (*Lissodelphis borealis*).	Pelagic	Common, more abundant November to April.	North Pacific Ocean, 30 to 50° North.	8,334 (6,019)—CA/OR/WA stock.	NL	NC.
Risso's dolphin (*Grampus griseus*).	Deep water, seamounts.	Common, present in summer, more abundant November to April.	Continental slope and outer shelf of tropical to temperate waters.	6,272 (4,913)—CA/OR/WA stock.	NL	NC.
Dall's porpoise (*Phocoenoides dalli*).	Shelf, slope, offshore.	Common, more abundant November to April.	North Pacific Ocean, 30 to 62° North.	42,000 (32,106)—CA/OR/WA stock.	NL	NC.
Harbor porpoise (*Phocoena phocoena*).	Coastal and inland waters.	AK to Point Conception, CA.	Shallow temperate to subpolar waters of Northern Hemisphere.	NA	NL	NC.
Pinnipeds:						
California sea lion (*Zalophus californianus*).	Coastal, shelf	Common, Channel Island breeding sites in summer.	Eastern North Pacific Ocean—Alaska to Mexico.	296,750 (153,337)—U.S. stock.	NL	NC.
Steller sea lion (*Eumetopias jubatus*).	Coastal, shelf	Rare	North Pacific Ocean—Central California to Korea.	49,685 (45,916)—Western stock. 58,334 to 72,223 (52,847)—Eastern stock.	EN—Western stock. DL—Eastern stock.	D.
Pacific harbor seal (*Phoca vitulina richardii*).	Coastal	Common, haul-outs and rookeries in Channel Islands, bulk of stock north of Point Conception.	Coastal temperate to polar regions in Northern Hemisphere.	30,196 (26,667)—California stock.	NL	NC.
Northern elephant seal (*Mirounga angustirostris*).	Coastal, pelagic when not migrating.	Common, haul-outs and rookeries in Channel Islands, December to March and April to August, spend 8 to 10 months at sea.	Eastern and Central North Pacific Ocean—Alaska to Mexico.	124,000 (74,913)—California breeding stock.	NL	NC.
Northern fur seal (*Callorhinus ursinus*).	Pelagic, offshore	Common, small population breeds on San Miguel Island May to October.	North Pacific Ocean—Mexico to Japan.	12,844 (6,722)—California stock.	NL	NC.
Guadalupe fur seal (*Arctocephalus townsendi*).	Coastal, shelf	Rare, observed in Channel Islands.	California to Baja California, Mexico.	7,408 (3,028)—Mexico to California stock.	T	D.

TABLE 3—THE HABITAT, OCCURRENCE, RANGE, REGIONAL ABUNDANCE, AND CONSERVATION STATUS OF MARINE MAMMALS THAT MAY OCCUR IN OR NEAR THE PROPOSED PIPE INSTALLATION PROJECT AREA OFF THE COAST OF CALIFORNIA IN THE PACIFIC OCEAN—Continued

[See text and Tables 3–1 in ExxonMobil's IHA application for further details]

Species	Habitat	Occurrence	Range	Best population estimate (minimum) [1]	ESA [2]	MMPA [3]
Fissipeds:						
Southern sea otter (*Enhydra lutris nereis*).	Coastal	Mainland coastline from San Mateo County to Santa Barbara County, CA San Nicolas Island.	North Pacific Rim—Japan to Mexico.	2,826 (2,723)—California stock.	T	D.

NA = Not available or not assessed.
[1] NMFS Marine Mammal Stock Assessment Reports.
[2] U.S. Endangered Species Act: EN = Endangered, T = Threatened, DL = Delisted, and NL = Not listed.
[3] U.S. Marine Mammal Protection Act: D = Depleted, S = Strategic, and NC = Not Classified.

Further detailed information regarding the biology, distribution, seasonality, life history, and occurrence of these marine mammal species in the proposed project area can be found in sections 3 and 4 of ExxonMobil's IHA application. NMFS has reviewed these data and determined them to be the best available scientific information for the purposes of the proposed IHA.

Potential Effects of the Specified Activity on Marine Mammals

This section includes a summary and discussion of the ways that the types of stressors associated with the specified activity (e.g., impact hammer pile-driving) have been observed to impact marine mammals. This discussion may also include reactions that we consider to rise to the level of a take and those that we do not consider to revise to the level of take (for example, with acoustics), we may include a discussion of studies that showed animals not reacting at all to sound or exhibiting barely measureable avoidance). This section is intended as a background of potential effects and does not consider either the specific manner in which this activity will be carried out or the mitigation that will be implemented, and how either of those will shape the anticipated impacts from this specific activity. The ''Estimated Take by Incidental Harassment'' section later in this document will include a quantitative analysis of the number of individuals that are expected to be taken by this activity. The ''Negligible Impact Analysis'' section will include the analysis of how this specific activity will impact marine mammals and will consider the content of this section, the ''Estimated Take by Incidental Harassment'' section, the ''Proposed Mitigation'' section, and the ''Anticipated Effects on Marine Mammal Habitat'' section to draw conclusions regarding the likely impacts of this activity on the reproductive success or survivorship of individuals and from that on the affected marine mammal populations or stocks.

Acoustic Impacts

When considering the influence of various kinds of sound on the marine environment, it is necessary to understand that different kinds of marine life are sensitive to different frequencies of sound. Based on available behavioral data, audiograms have been derived using auditory evoked potentials, anatomical modeling, and other data, Southall *et al.* (2007) designate ''functional hearing groups'' for marine mammals and estimate the lower and upper frequencies of functional hearing of the groups. The functional groups and the associated frequencies are indicated below (though animals are less sensitive to sounds at the outer edge of their functional range and most sensitive to sounds of frequencies within a smaller range somewhere in the middle of their functional hearing range):

- Low-frequency cetaceans (13 species of mysticetes): Functional hearing is estimated to occur between approximately 7 Hz and 30 kHz;
- Mid-frequency cetaceans (32 species of dolphins, six species of larger toothed whales, and 19 species of beaked and bottlenose whales): Functional hearing is estimated to occur between approximately 150 Hz and 160 kHz;
- High-frequency cetaceans (eight species of true porpoises, six species of river dolphins, *Kogia* spp., the franciscana (*Pontoporia blainvillei*), and four species of cephalorhynchids): Functional hearing is estimated to occur between approximately 200 Hz and 180 kHz; and
- Phocid pinnipeds in water: Functional hearing is estimated to occur between approximately 75 Hz and 100 kHz;
- Otariid pinnipeds in water: Functional hearing is estimated to occur between approximately 100 Hz and 40 kHz.

As mentioned previously in this document, 30 marine mammal species managed under NMFS jurisdiction (26 cetacean and 4 pinniped species) are likely to occur in the proposed action area. Of the 26 cetacean species likely to occur in ExxonMobil's proposed action area, 6 are classified as low-frequency cetaceans (i.e., gray, humpback, minke, sei, fin, and blue whale), 18 are classified as mid-frequency cetaceans (i.e., sperm, Baird's beaked, Cuvier's beaked, Blainville's beaked, Perrin's beaked, Lesser beaked, Stejneger's beaked, Ginkgo-toothed beaked, Hubb's beaked, killer, and short-finned pilot whale, as well as bottlenose, striped, short-beaked common, long-beaked common, Pacific white-sided, northern right whale, and Risso's dolphin), 2 are classified as high-frequency cetaceans (i.e., pygmy sperm whale and Dall's porpoise), 2 are classified as phocids (i.e., harbor and northern elephant seal), and 2 are classified as otariid pinnipeds (i.e., California sea lion and northern fur seal) (Southall *et al.,* 2007). A species' functional hearing group is a consideration when we analyze the effects of exposure to sound on marine mammals.

Current NMFS practice, regarding exposure of marine mammals to high-level underwater sounds is that cetaceans and pinnipeds exposed to impulsive sounds at or above 180 and 190 dB (rms), respectively, have the potential to be injured (i.e., Level A harassment). NMFS considers the potential for Level B (behavioral) harassment to occur when marine mammals are exposed to sounds below injury thresholds but at or above the 160 dB (rms) threshold for impulse sounds (e.g., impact pile-driving) and the 120 dB (rms) threshold for continuous noise

(e.g., vibratory pile-driving). No vibratory pile-driving is planned for ExxonMobil's proposed activity in the Santa Barbara Channel. Current NMFS practice, regarding exposure of marine mammals to high-level in-air sounds, as a threshold for potential Level B harassment, is at or above 90 dB re 20 μPa for harbor seals and at or above 100 dB re 20 μPa for all other pinniped species (Lawson *et al.,* 2002; Southall *et al.,* 2007). NMFS has not established a threshold for Level A harassment for marine mammals exposed to in-air noise; however, Southall et al. (2007) recommends 149 dB re 20 μPa (peak) (flat) as the potential threshold for injury from in-air noise for all pinnipeds.

Acoustic stimuli generated by the conductor pipe installation activities, which introduce sound into the marine environment and in-air, may have the potential to cause Level B harassment of marine mammals in the proposed action area. The effects of sounds from impact hammer pile-driving activities might include one or more of the following: tolerance, masking of natural sounds, behavioral disturbance, temporary or permanent hearing impairment, or non-auditory physical or physiological effects (Richardson *et al.,* 1995; Gordon *et al.,* 2004; Nowacek *et al.,* 2007; Southall *et al.,* 2007). Permanent hearing impairment, in the unlikely event that it occurred, would constitute injury, but temporary threshold shift (TTS) is not an injury (Southall *et al.,* 2007). Although the possibility cannot be entirely excluded, it is unlikely that the proposed project would result in any cases of temporary or permanent hearing impairment, or any significant non-auditory physical or physiological effects. Based on the available data and studies described here, some behavioral disturbance is expected.

The effects of pile-driving on marine mammals depend on several factors, including the size, type, and depth of the animal; the depth, intensity, and duration of the pile-driving sound; the depth of the water column; the substrate of the habitat; the standoff distance between the pile and the animals; and the sound propagation properties of the environment. Impacts to marine mammals from pile-driving activities are expected to result primarily from acoustic pathways. As such, the degree of effect is intrinsically related to the received level and duration of the sound exposure, which are in turn influenced by the distance between the animal and the source. The further away from the source, the less intense the exposure should be. The substrate and depth of the habitat affect the sound propagation properties of the environment. Shallow environments are typically more structurally complex, which leads to rapid sound attenuation. In addition, substrates that are soft (e.g., sand) would absorb or attenuate the sound more readily than hard substrates (e.g., rock), which may reflect the acoustic wave. Soft porous substrates would also likely require less time to drive the pipe, and possibly less forceful equipment, which would ultimately decrease the intensity of the acoustic source.

In the absence of mitigation, impacts to marine mammal species may result from physiological and behavioral responses to both the type and strength of the acoustic signature (Viada *et al.,* 2008). The type and severity of behavioral impacts are difficult to define due to limited studies addressing the behavioral effects of impulse sounds on marine mammals. Potential effects from impulsive sound sources can range in severity, ranging from effects such as behavioral disturbance, tactile perception, physical discomfort, slight injury, of the internal organs and the auditory system, to mortality (Yelverton *et al.,* 1973).

Tolerance

Richardson *et al.* (1995) defines tolerance as the occurrence of marine mammals in areas where they are exposed to human activities or man-made noise. In many cases, tolerance develops by the animal habituating to the stimulus (i.e., the gradual waning of responses to a repeated or ongoing stimulus) (Richardson, *et al.,* 1995; Thorpe, 1963), but because of ecological or physiological requirements, many marine animals may need to remain in areas where they are exposed to chronic stimuli (Richardson, *et al.,* 1995).

Numerous studies have shown that pulsed underwater sounds from industry activities are often readily detectable in the water at distances of many kilometers. Several studies have shown that marine mammals at distances more than a few kilometers often show no apparent response (Miller *et al.,* 2005; Bain and Williams, 2006). That is often true even in cases when the pulsed sounds must be readily audible to the animals based on measured received levels and the hearing sensitivity of the marine mammal group. Although various baleen whales and toothed whales, and (less frequently) pinnipeds have been shown to react behaviorally to airgun pulses under some conditions, at other times marine mammals of all three types have shown no overt reactions (e.g., Malme *et al.,* 1986; Richardson *et al.,* 1995; Madsen and Mohl, 2000; Croll *et al.,* 2001; Jacobs and Terhune, 2002; Madsen *et al.,* 2002; Miller *et al.,* 2005). The relative responsiveness of baleen and toothed whales are quite variable.

Masking

The term masking refers to the inability of a subject to recognize the occurrence of an acoustic stimulus as a result of the interference of another acoustic stimulus (Clark *et al.,* 2009). Introduced underwater sound may, through masking, reduce the effective communication distance of a marine mammal species if the frequency of the source is close to that used as a signal by the marine mammal, and if the anthropogenic sound is present for a significant fraction of the time (Richardson *et al.,* 1995).

Natural and artificial sounds can disrupt behavior by masking, or interfering with, a marine mammal's ability to hear other sounds. Masking occurs when the receipt of a sound is interfered with by another coincident sound at similar frequencies and at similar or higher levels. Chronic exposure to excessive, though not high-intensity, sound could cause masking at particular frequencies for marine mammals that utilize sound for vital biological functions. Masking can interfere with detection of acoustic signals such as communication calls, echolocation sounds, and environmental sounds important to marine mammals. Therefore, under certain circumstances, marine mammals whose acoustic sensors or environment are being severely masked could also be impaired from maximizing their performance fitness in survival and reproduction. If the coincident (masking) sound were man-made, it could be potentially harassing if it disrupted hearing-related behavior. It is important to distinguish TTS and PTS, which persist after the sound exposure, from masking, which occurs during the sound exposure. Because masking (without resulting in threshold shift) is not associated with abnormal physiological function, it is not considered a physiological effect, but rather a potential behavioral effect.

The frequency range of the potentially masking sound is important in determining any potential behavioral impacts. Because sound generated from in-water pile-driving is mostly concentrated at low frequency ranges, it may have less effect on high frequency echolocation sounds made by porpoises. However, lower frequency man-made sounds are more likely to affect detection of communication calls and other potentially important natural sounds such as surf and prey sound. It

may also affect communication signals when they occur near the sound band and thus reduce the communication space of animals (e.g., Clark *et al.,* 2009) and cause increased stress levels (e.g., Foote *et al.,* 2004; Holt *et al.,* 2009).

Masking has the potential to impact species at population, community, or even ecosystem levels, as well as at individual levels. Masking affects both senders and receivers of the signals and can potentially have long-term chronic effects on marine mammal species and populations. Recent research suggests that low frequency ambient sound levels have increased by as much as 20 dB (more than three times in terms of SPL) in the world's ocean from pre-industrial periods, and that most of these increases are from distant shipping (Hildebrand, 2009). All anthropogenic sound sources, such as those from vessel traffic, pile-driving, and dredging activities, contribute to the elevated ambient sound levels, thus intensifying masking. However, much of the sound generated from the proposed activities is not expected to contribute significantly to increased ocean ambient sound.

Given that the energy distribution of pile-driving covers a broad frequency spectrum, sound from these sources would likely be within the audible range of marine mammals present in the proposed action area. Impact pile-driving activity is relatively short-term, with rapid pulses occurring for the duration of the driving event. The probability that impact pile-driving resulting from this proposed action would mask acoustic signals important to the behavior and survival of marine mammal species is likely to be discountable. Any masking event that could possibly rise to Level B harassment under the MMPA would occur concurrently within the zones of behavioral harassment already estimated for impact pile-driving, and which have already been taken into account in the exposure analysis.

Behavioral Disturbance

Marine mammals may behaviorally react to sound when exposed to anthropogenic noise. Disturbance includes a variety of effects, including subtle to conspicuous changes in behavior, movement, and displacement. Behavioral responses to sound are highly variable and context-specific and reactions, if any, depend on species, state of maturity, experience, current activity, reproductive state, time of day, and many other factors (Richardson *et al.,* 1995; Wartzok *et al.,* 2004; Southall *et al.,* 2007; Weilgart, 2007).

Habituation can occur when an animal's response to a stimulus wanes with repeated exposure, usually in the absence of unpleasant associated events (Wartzok *et al.,* 2003). Animals are most likely to habituate to sounds that are predictable and unvarying. The opposite process is sensitization, when an unpleasant experience leads to subsequent responses, often in the form of avoidance, at a lower level of exposure. Behavioral state may affect the type of response as well. For example, animals that are resting may show greater behavioral change in response to disturbing sound levels than animals that are highly motivated to remain in an area for feeding (Richardson *et al.,* 1995; NRC, 2003; Wartzok *et al.,* 2003).

Controlled experiments involving exposure to loud impulse sound sources with captive marine mammals showed pronounced behavioral reactions, including avoidance of loud sound sources (Ridgeway *et al.,* 1997; Finneran *et al.,* 2003). Observed responses of wild marine mammals to loud pulsed sound sources (typically seismic airguns or acoustic harassment devices, but also including impact pile-driving) have been varied but often consist of avoidance behavior or other behavioral changes suggesting discomfort (Morton and Symonds, 2002; Thorson and Reyff, 2006; see also Gordon *et al.,* 2004; Wartzok *et al.,* 2003; Nowacek *et al.,* 2007).

It is likely that the onset of pile-driving could result in temporary, short-term changes in an animal's typical behavior and/or avoidance of the affected action area. These behavioral reactions are often shown as: Changing durations of surfacing and dives, number of blows per surfacing, or moving direction and/or speed; reduced/increased vocal activities; changing/cessation of certain behavioral activities (such as socializing or feeding); visible startle response or aggressive behavior (such as tail/fluke slapping or jaw clapping); avoidance of areas where noise sources are located; and/or flight responses (e.g., pinnipeds flushing into the water from haul-outs or rookeries). If a marine mammal does react briefly to an underwater sound by changing its behavior or moving a small distance, the impacts of the change are unlikely to be significant to the individual, let alone the stock or population. However, if a sound source displaces marine mammals from an important feeding or breeding area for a prolonged period, impacts on individuals and populations could be significant (e.g., Lusseau and Bejder, 2007; Weilgart, 2007).

The biological significance of many of these behavioral disturbances is difficult to predict, especially if the detected disturbances appear minor. However, the consequences of behavioral modification could be expected to be biologically significant if the change affects growth, survival, and/or reproduction. Some of these significant behavioral modifications that could potentially lead to effects on growth, survival, or reproduction include:

- Change in diving/surfacing patterns (such as those thought to be causing beaked whale stranding due to exposure to military mid-frequency tactical sonar);
- Habitat abandonment due to loss of desirable acoustic environment; and
- Cessation of feeding or social interaction.

The onset of behavioral disturbance from anthropogenic noise depends on both external factors (characteristics of noise sources and their paths) and the specific characteristics of receiving animals (hearing, motivation, experience, demography) and is also difficult to predict (Richardson *et al.,* 1995; Southall *et al.,* 2007). Given the many uncertainties in predicting the quantity and types of impacts of noise on marine mammals, it is common practice to estimate how many mammals would be present within a particular distance of industrial activities and/or exposed to a particular level of sound. In most cases, this approach likely overestimates the numbers of marine mammals that would be affected in some biologically-important manner.

Hearing Impairment and Other Physical Effects

Marine mammals exposed to high intensity sound repeatedly or for prolonged periods can experience hearing threshold shift, which is the loss of hearing sensitivity at certain frequency ranges (Kastak *et al.,* 1999; Schlundt *et al.,* 2000; Finneran *et al.,* 2002, 2005). Threshold shift can be permanent (PTS), in which case the loss of hearing sensitivity is not recoverable, or temporary (TTS), in which case the animal's hearing threshold would recover over time (Southall *et al.,* 2007). Marine mammals depend on acoustic cues for vital biological functions (e.g., orientation, communication, finding prey, avoiding predators); thus, TTS may result in reduced fitness in survival and reproduction. However, this depends on the frequency and duration of TTS, as well as the biological context in which it occurs. TTS of limited duration, occurring in a frequency range that does not coincide with that used for recognition of important acoustic cues, would have little to no effect on an

animal's fitness. Repeated sound exposures that lead to TTS could cause PTS. PTS, in the unlikely event that it occurred, would constitute injury, but TTS is not considered injury (Southall *et al.,* 2007). It is unlikely that the project would result in any cases of temporary or especially permanent hearing impairment or any significant non-auditory physical or physiological effects for reasons discussed later in this document. Some behavioral disturbance is expected, but it is likely that this would be localized and short-term because of the short duration of the proposed action.

Many marine mammals are likely to show some avoidance of the proposed action area where received levels of pile-driving sound high enough that hearing impairment could potentially occur. In those cases, the avoidance responses of the animals themselves would reduce or (most likely) avoid any possibility of hearing impairment. Non-auditory physical effects may also occur in marine mammals exposed to strong underwater pulsed sound.

Temporary Threshold Shift—TTS is the mildest form of hearing impairment that can occur during exposure to a strong sound (Kryter, 1985). While experiencing TTS, the hearing threshold rises and a sound must be stronger in order to be heard. At least in terrestrial mammals, TTS can last from minutes or hours to (in cases of strong TTS) days. For sound exposures at or somewhat above the TTS threshold, hearing sensitivity in both terrestrial and marine mammals recovers rapidly after exposure to the noise ends. Few data on sound levels and durations necessary to elicit mild TTS have been obtained for marine mammals, and none of the published data concern TTS elicited by exposure to multiple pulses of sound. Available data on TTS in marine mammals are summarized in Southall *et al.* (2007). Table 2 (above) presents the estimated distances from the impact hammer during pile-driving activities at which the received energy level (per pulse, flat-weighted) would be expected to be greater than or equal to 180 and 190 dB re 1 μPa (rms).

To avoid the potential for injury (Level A harassment), NMFS (1995, 2000) concluded that cetaceans and pinnipeds should not be exposed to pulsed underwater noise at received levels exceeding 180 and 190 dB re 1 μPa (rms), respectively. The established 180 and 190 dB (rms) criteria are not considered to be the levels above which TTS might occur. Rather, they are the received levels above which, in the view of a panel of bioacoustics specialists convened by NMFS before TTS measurements for marine mammals started to become available, one could not be certain that there would be no injurious effects, auditory or otherwise, to marine mammals. NMFS also assumes that cetaceans and pinnipeds exposed to levels exceeding 160 dB re 1 μPa (rms) may experience Level B harassment.

For toothed whales, researchers have derived TTS information for odontocetes from studies on the bottlenose dolphin and beluga whale (*Delphinapterus leucas*). The experiments show that exposure to a single impulse at a received level of 207 kPa (or 30 psi, p-p), which is equivalent to 228 dB re 1 Pa (p-p), resulted in a 7 and 6 dB TTS in the beluga whale at 0.4 and 30 kHz, respectively. Thresholds returned to within 2 dB of the pre-exposure level within 4 minutes of the exposure (Finneran *et al.,* 2002). For the one harbor porpoise tested, the received level of airgun sound that elicited onset of TTS was lower (Lucke *et al.,* 2009). If these results from a single animal are representative, it is inappropriate to assume that onset of TTS occurs at similar received levels in all odontocetes (*cf.* Southall *et al.,* 2007). Some cetaceans apparently can incur TTS at considerably lower sound exposures than are necessary to elicit TTS in the bottlenose dolphin or beluga whale.

For baleen whales, there are no data, direct or indirect, on levels or properties of sound that are required to induce TTS. The frequencies to which baleen whales are most sensitive are assumed to be lower than those to which odontocetes are most sensitive, and natural background noise levels at those low frequencies tend to be higher. As a result, auditory thresholds of baleen whales within their frequency band of best hearing are believed to be higher (less sensitive) than are those of odontocetes at their best frequencies (Clark and Ellison, 2004). From this, it is suspected that received levels causing TTS onset may also be higher in baleen whales than those of odontocetes (Southall *et al.,* 2007).

In pinnipeds, researchers have not measured TTS thresholds associated with exposure to brief pulses (single or multiple) of underwater sound. Initial evidence from more prolonged (non-pulse) exposures suggested that some pinnipeds (harbor seals in particular) incur TTS at somewhat lower received levels than do small odontocetes exposed for similar durations (Kastak *et al.,* 1999, 2005; Ketten *et al.,* 2001). The TTS threshold for pulsed sounds has been indirectly estimated as being an SEL of approximately 171 dB re 1 $\mu Pa^2 \cdot s$ (Southall *et al.,* 2007) which would be equivalent to a single pulse with a received level of approximately 181 to 186 dB re 1 μPa (rms), or a series of pulses for which the highest rms values are a few dB lower. Corresponding values for California sea lions and northern elephant seals are likely to be higher (Kastak *et al.,* 2005).

Permanent Threshold Shift—When PTS occurs, there is physical damage to the sound receptors in the ear. In severe cases, there can be total or partial deafness, whereas in other cases, the animal has an impaired ability to hear sounds in specific frequency ranges (Kryter, 1985). There is no specific evidence that exposure to pulses of airgun or pile-driving sound can cause PTS in any marine mammal. However, given the possibility that mammals close to an airgun array might incur at least mild TTS, there has been further speculation about the possibility that some individuals occurring very close to airguns might incur PTS (e.g., Richardson *et al.,* 1995, p. 372*ff;* Gedamke *et al.,* 2008). Single or occasional occurrences of mild TTS are not indicative of permanent auditory damage, but repeated or (in some cases) single exposures to a level well above that causing TTS onset might elicit PTS.

Relationships between TTS and PTS thresholds have not been studied in marine mammals but are assumed to be similar to those in humans and other terrestrial mammals (Southall *et al.,* 2007). PTS might occur at a received sound level at least several dBs above that inducing mild TTS if the animal were exposed to strong sound pulses with rapid rise times. Based on data from terrestrial mammals, a precautionary assumption is that the PTS threshold for impulse sounds (such as an impact hammer pile-driving as received close to the source) is at least 6 dB higher than the TTS threshold on a peak-pressure basis, and probably greater than 6 dB (Southall *et al.,* 2007).

Given the higher level of sound necessary to cause PTS as compared with TTS, it is considerably less likely that PTS would occur. Baleen whales generally avoid the immediate area around operating sound sources, as do some other marine mammals.

Non-auditory Physiological Effects—Non-auditory physiological effects or injuries that theoretically might occur in marine mammals exposed to strong underwater sound include stress, neurological effects, bubble formation, resonance, and other types of organ or tissue damage (Cox *et al.,* 2006; Southall *et al.,* 2007). Studies examining such effects are limited.

In general, very little is known about the potential for pile-driving sounds (or other types of strong underwater sounds) to cause non-auditory physical effects in marine mammals. Such effects, if they occur at all, would presumably be limited to short distances from the sound source and to activities that extend over a prolonged period. The available data do not allow identification of a specific exposure level above which non-auditory effects can be expected (Southall *et al.,* 2007), or any meaningful quantitative predictions of the numbers (if any) of marine mammals that might be affected in those ways. Marine mammals that show behavioral avoidance of pile-driving, including most baleen whales, some odontocetes, and some pinnipeds, are especially unlikely to incur auditory impairment or non-auditory physical effects.

Airborne Sound Effects

Marine mammals that occur in the proposed project area could be exposed to airborne sounds associated with pile-driving that have the potential to cause harassment, depending on their distance from pile-driving activities. Airborne pile-driving sound would have less impact on cetaceans than pinnipeds because sound from atmospheric sources does not transmit well underwater (Richardson *et al.,* 1995); thus, airborne sound would only be an issue for pinnipeds in the proposed action area, whether hauled-out or in the water with their heads in the air. Most likely, a sound would cause behavioral responses similar to those discussed above in relation to underwater sound. For instance, anthropogenic sound could cause hauled-out pinnipeds to exhibit changes in their normal behavior, such as reduction in vocalizations, or cause them to temporarily abandon their habitat and move further from the source. Studies by Blackwell *et al.* (2004) and Moulton *et al.* (2005) indicate a tolerance or lack of response to unweighted airborne sounds as high as 112 dB peak and 96 dB rms.

The potential effects to marine mammals described in this section of the document do not take into consideration the proposed monitoring and mitigation measures described later in this document (see the ''Proposed Mitigation'' and ''Proposed Monitoring and Reporting'' sections) which, as noted are designed to effect the least practicable impact on affected marine mammal species and stocks.

Anticipated Effects on Marine Mammal Habitat

The proposed activities at the Harmony Platform would not result in permanent impacts to habitats used directly by marine mammals, but may have potential short-term impacts to food sources such as forage fish and invertebrates, and may affect acoustic habitat. There are no rookeries or major haul-out sites, no known foraging hot-spots, or other ocean bottom structure of significant biological importance to marine mammals present in the marine waters in the vicinity of the proposed action area. Therefore, the main impact issue associated with the proposed activity would be temporarily elevated sound levels and associated direct effects on marine mammals, as discussed previously in this document. The most likely impact to marine mammal habitat occurs from pile-driving effects on likely marine mammal prey near the Harmony Platform and minor impacts to the immediate substrate during conductor pipe installation.

Anticipated Effects on Potential Prey

Common prey for cetaceans and pinnipeds in the proposed action area include a wide variety of nekton species spanning the water column pelagic, epipelagic, benthopelagic and demersal zones. The most common prey groups found in the area are hagfish, lampreys, cartilaginous, and bony fish (including anchovies), and large free swimming invertebrates (e.g., squids). Pinnipeds could also be considered prey for large cetaceans (e.g., killer whales). Prey for baleen whales (e.g., blue whale) include large zooplankton (e.g., krill), opportunistically consumed during migration/transit through the Santa Barbara Channel. Infaunal benthic amphipods exist in the proposed action area and are common prey items for feeding gray whales, but the Santa Barbara Channel is not known as a feeding ground for this species.

Fish react to sounds which are especially strong and/or intermittent low-frequency sounds. Short duration, sharp sounds can cause overt or subtle changes in fish behavior and local distribution. Hastings and Popper (2005) and Hastings (2009) identified several studies that suggest fish may relocate to avoid certain areas of sound energy. Additional studies have documented effects of pile-driving (or other types of sounds) on fish, although several are based on studies in support of large multi-year bridge construction projects (e.g., Scholik and Yan, 2001, 2002; Popper and Hastings, 2009). Sound pulses at received levels of 160 dB re 1 μPa may cause subtle changes in fish behavior. SPLs of 180 dB may cause noticeable changes in behavior (Pearson *et al.,* 1992; Skalski *et al.,* 1992). SPLs of sufficient strength have been known to cause injury to fish and fish mortality. The most likely impact to fish from pile-driving activities in the proposed action area would be temporary behavioral avoidance of the area. The duration of fish avoidance of this area after pile-driving stops is unknown, but a rapid return to normal recruitment, distribution, and behavior is anticipated. In general, impacts to marine mammal prey species are expected to be minor and temporary due to the short timeframe for the proposed activities. However, adverse impacts may occur to a few species of fish which may be present in the proposed action area.

Anticipated Effects on Potential Foraging Habitat

The Harmony Platform has been in place for 20 years and the addition of six conductor pipes to the existing 51 conductor pipes within the platform structure would not produce a quantifiable impact to marine mammals to their existing habitat. The additional six conductor pipes are approved (permitted) as part of the original Development Production Plan for Harmony Platform.

The area likely impacted by the project activities is relatively small compared to the available habitat in the Santa Barbara Channel waters. The likelihood for avoidance by potential prey (i.e., fish and invertebrates) of the immediate area due to the temporary loss of this foraging habitat is unknown, but a rapid return to normal recruitment, distribution, and behavior is anticipated. Any behavioral avoidance by fish of the disturbed area would still leave significantly large areas of prey and marine mammal foraging habitat in the nearby vicinity.

Given the short hourly duration of sound associated with individual pile-driving activities and the relatively small areas being affected, pile-driving activities associated with the proposed action are not likely to have a permanent, adverse effect on any fish habitat, or populations of fish and invertebrate species. Therefore, pile-driving is not likely to have a permanent, adverse effect on marine mammal foraging habitat at the proposed action area. Furthermore, the area around Harmony Platform in the Santa Barbara Channel, is already altered by various shipping activities.

There would be no measureable loss of existing marine mammal water column or benthic habitat resulting from the installation of six conductor pipes at Harmony Platform. The impacts associated with the proposed project are temporary and are not expected to have long term effects on marine mammals or marine mammal habitat. The primary impact of the activity on the local environment is from sound, above and below water surface to a depth of 366 m. The transitory nature of sound would not impact the habitat of the marine mammal populations. A secondary impact from the activity would be the temporary suspension of bottom sediment, resulting from the installation via hammer driving of six 26-in diameter steel conductor pipes within the platform jacket structure. The small amount of suspended sediment would quickly disperse and resettle to the seafloor. No permanent impacts are expected to marine mammals. The impacts are temporary in nature and are associated with pile-driving and construction noise disturbance and would not require restoration. Site conditions are anticipated to be unchanged from existing conditions for marine mammals following project implementation.

There is no potential for an oil spill from operations/activities associated with this project. Potential impacts from an oil spill from existing operations are addressed in an approved Oil Spill Response Plan on file with BOEM for the Santa Ynez Production Unit, including Harmony Platform. Any potential spill from the supply boats or helicopters are already included in the approved operation and plan.

Based on the preceding discussion of potential types of impacts to marine mammal habitat, overall, NMFS anticipates that the proposed action is not expected to cause significant impacts on habitats used by the marine mammal species in the proposed action area or on the food sources that they utilize.

Proposed Mitigation

In order to issue an Incidental Take Authorization (ITA) under section 101(a)(5)(D) of the MMPA, NMFS must set forth the permissible methods of taking pursuant to such activity, and other means of effecting the least practicable impact on such species or stock and its habitat, paying particular attention to rookeries, mating grounds, and areas of similar significance, and the availability of such species or stock for taking for certain subsistence uses (where relevant).

ExxonMobil has incorporated a suite of appropriate mitigation measures into its project description (see Section 11 of the IHA application).

To reduce the potential for disturbance from acoustic stimuli associated with the proposed activities, ExxonMobil and/or its designees have proposed to implement the following mitigation measures for marine mammals:

(1) Proposed buffer and exclusion zones around the sound source;

(2) Hours of operation;

(3) Shut-down procedures; and

(4) Ramp-up procedures.

Proposed Exclusion Zones—ExxonMobil uses radii to designate exclusion and buffer zones and to estimate take for marine mammals. Table 2 (presented earlier in this document) shows the distances at which one would expect marine mammal exposures to three received sound levels (160, 180, and 190 dB) from the impact hammer. The 180 and 190 dB level shut-down criteria are applicable to cetaceans and pinnipeds, respectively, as specified by NMFS (2000). ExxonMobil used these levels to establish the exclusion and buffer zones.

Based on the modeling, exclusion zones (for triggering a shut-down) for Level A harassment would be established for cetaceans and pinnipeds at 3.5 m (11.5 ft) and 10 m (32.8 ft) from the conductor pipe sound source, respectively. These shut-down zones would be monitored by a dedicated PSO. If the PSO detects a marine mammal(s) within or about to enter the appropriate exclusion zone, the pile-driving activities would be shut-down immediately. If marine mammals are present within the shut-down zone before impact pile-driving activities begin, start of operations would be delayed until the exclusion zones are clear for at least 30 minutes. If marine mammals appear in the shut-down zone during proposed pile-driving activities, the PSO would instruct the hammer operator to halt all operations in a safe, but immediate manner. Pile-driving activities would only resume once the exclusion zone has been cleared for at least 30 minutes. In the unlikely event that the marine mammal enters the exclusion zone during pile-driving activities, the exposure and behaviors would be documented and reported by the PSO and NMFS would be contacted within 24 hours. A non-PSO safety spotter would also be assigned to the lower deck observation area. All personnel operating at the lower observation levels would be required to wear appropriate personal protective equipment.

Hours of Operation—The proposed activities would be conducted on a continual 24-hour basis; therefore, some of the 2.5 to 3.3 hours of active impact pile-driving periods would be expected to occur during non-daylight hours. To facilitate visual monitoring during non-daylight hours, the exclusion zones would be illuminated to permit more effective viewing by the PSO. Lighting would not be expected to attract marine mammals. The areas where the exclusion zones occur fall within the jacket structure of the platform, and therefore could be easily illuminated by lights and monitored during non-daylight hours. For the buffer zone, which would extend out to 325 m (1,066.3 ft) from the conductor pipe, PSOs would be stationed on an upper deck of the Harmony Platform to monitor for marine mammals during the proposed pile-driving activities. During non-daylight hours, PSOs would utilize night-vision devices and other appropriate equipment to monitor marine mammals. If nighttime visual aids are insufficient, ExxonMobil proposes to use daytime visual counts of marine mammals as an estimate of the number of marine mammals present during non-daylight hours (within a 24 hour period), noting that diurnal activities for most marine mammals are expected to vary somewhat.

Shut-down Procedures—ExxonMobil would shut-down the operating hammer if a marine mammal is detected outside the exclusion zone, and the sound source would be shut-down before the animal is within the exclusion zone. Likewise, if a marine mammal is already within the exclusion zone when first detected, the sound source would be shut-down immediately.

Following a shut-down, ExxonMobil would not resume pile-driving activities until the marine mammal has cleared the exclusion zone. ExxonMobil would consider the animal to have cleared the exclusion zone if:

- A PSO has visually observed the animal leave the exclusion zone, or
- A PSO has not sighted the animal within the exclusion zone for 15 minutes for species with shorter dive durations (i.e., small odontocetes and pinnipeds), or 30 minutes for species with longer dive durations (i.e., mysticetes and large odontocetes, including sperm, pygmy and dwarf sperm, killer, and beaked whales).

All visual monitoring would be conducted by qualified PSOs. Visual monitoring would be conducted continuously during active pile-driving activities. PSOs would not have any tasks other than visual monitoring and would conduct monitoring from the best

vantage point(s) practicable (e.g., on the Harmony Platform or other suitable location) that provides 360°visibility of the Level A harassment exclusion zones and Level B harassment buffer zone, as far as possible. The PSO would be in radio communication with the hammer operator during pile-driving activities, and would call for a shut-down in the event a pinniped or cetacean appears to be headed toward its respective exclusion zone for cetaceans and pinnipeds.

Ramp-Up Procedures—Ramp-up (sometimes referred to as a ''soft-start'') of the impact hammer provides a gradual increase in sound levels until the full sound level is achieved. The purpose of a ramp-up is to ''warn'' marine mammals in the vicinity of the impact hammer and to provide the time for them to leave the area avoiding any potential injury or impairment of their hearing abilities. A ramp-up consists of an initial set of three strikes from the impact hammer at 40% energy, followed by a 30 second waiting period, then two subsequent three strike sets.

The buffer zone would be monitored by PSOs beginning 30 minutes before pile-driving activities, during pile-driving, and for 30 minutes after pile-driving stops. During ramp-up, the PSOs would monitor the exclusion zone, and if marine mammals are sighted, a shut-down would be implemented.

If the complete exclusion zone has not been visible for at least 30 minutes prior to the start of operations in either daylight or nighttime, ExxonMobil would not commence the ramp-up. ExxonMobil would not initiate a ramp-up of the impact hammer if a marine mammal is sighted within or near the applicable exclusion zones during the day or close to the Harmony Platform at night.

Oil Spill Plan—ExxonMobil has developed an Oil Spill Response Plan and it is on file with BOEM.

Mitigation Conclusions

NMFS has carefully evaluated the applicant's proposed mitigation measures and has considered a range of other measures in the context of ensuring that NMFS prescribes the means of effecting the least practicable impact on the affected marine mammal species and stocks and their habitat. NMFS's evaluation of potential measures included consideration of the following factors in relation to one another:

(1) The manner in which, and the degree to which, the successful implementation of the measure is expected to minimize adverse impacts to marine mammals;

(2) The proven or likely efficacy of the specific measure to minimize adverse impacts as planned; and

(3) The practicability of the measure for applicant implementation, including consideration of personnel safety, practicality of implementation, and impact on the effectiveness of the activity.

Any mitigation measure(s) prescribed by NMFS should be able to accomplish, have a reasonable likelihood of accomplishing (based on current science), or contribute to the accomplishment of one or more of the general goals listed below:

(1) Avoidance or minimization of injury or death of marine mammals wherever possible (goals 2, 3, and 4 may contribute to this goal).

(2) A reduction in the numbers of marine mammals (total number or number at biologically important time or location) exposed to received levels of hammer pile-driving, or other activities expected to result in the take of marine mammals (this goal may contribute to 1, above, or to reducing harassment takes only).

(3) A reduction in the number of times (total number or number at biologically important time or location) individuals would be exposed to received levels of hammer pile-driving, or other activities expected to result in the take of marine mammals (this goal may contribute to 1, above, or to reducing harassment takes only).

(4) A reduction in the intensity of exposures (either total number or number at biologically important time or location) to received levels of hammer pile-driving, or other activities expected to result in the take of marine mammals (this goal may contribute to a, above, or to reducing the severity of harassment takes only).

(5) Avoidance of minimization of adverse effects to marine mammal habitat, paying special attention to the food base, activities that block or limit passage to or from biologically important areas, permanent destruction of habitat, or temporary destruction/disturbance of habitat during a biologically important time.

(6) For monitoring directly related to mitigation—an increase in the probability of detecting marine mammals, thus allowing for more effective implementation of the mitigation.

Based on NMFS's evaluation of the applicant's proposed measures, as well as other measures considered by NMFS or recommended by the public, NMFS has preliminarily determined that the proposed mitigation measures provide the means of effecting the least practicable impact on marine mammal species or stocks and their habitat, paying particular attention to rookeries, mating grounds, and areas of similar significance.

Proposed Monitoring and Reporting

In order to issue an ITA for an activity, section 101(a)(5)(D) of the MMPA states that NMFS must set forth ''requirements pertaining to the monitoring and reporting of such taking.'' The MMPA implementing regulations at 50 CFR 216.104(a)(13) indicate that requests for ITAs must include the suggested means of accomplishing the necessary monitoring and reporting that would result in increased knowledge of the species and of the level of taking or impacts on populations of marine mammals that are expected to be present in the proposed action area. ExxonMobil submitted a marine mammal monitoring plan as part of the IHA application. It can be found in Section 13 of the IHA application. The plan may be modified or supplemented based on comments or new information received from the public during the public comment period or from the peer review panel (see the ''Monitoring Plan Peer Review'' section later in this document).

Monitoring measures prescribed by NMFS should accomplish one or more of the following general goals:

(1) An increase in the probability of detecting marine mammals, both within the mitigation zone (thus allowing for more effective implementation of the mitigation) and in general to generate more data to contribute to the analyses mentioned below;

(2) An increase in our understanding of how many marine mammals are likely to be exposed to levels of sound from impact hammer pile-driving activities that we associate with specific adverse effects, such as behavioral harassment, TTS or PTS;

(3) An increase in our understanding of how marine mammals respond to stimuli expected to result in take and how anticipated adverse effects on individuals (in different ways and to varying degrees) may impact the population, species, or stock (specifically through effects on annual rates of recruitment or survival) through any of the following methods:

- Behavioral observations in the presence of stimuli compared to observations in the absence of stimuli (need to be able to accurately predict received level, distance from source, and other pertinent information);
- Physiological measurements in the presence of stimuli compared to observations in the absence of stimuli

(need to be able to accurately predict receive level, distance from the source, and other pertinent information);

• Distribution and/or abundance comparisons in times or areas with concentrated stimuli versus times or areas without stimuli;

(4) An increased knowledge of the affected species; and

(5) An increase in our understanding of the effectiveness of certain mitigation and monitoring measures.

Proposed Monitoring

ExxonMobil proposes to sponsor marine mammal monitoring during the proposed project, in order to implement the proposed mitigation measures that require real-time monitoring, and to satisfy the anticipated monitoring requirements of the IHA. ExxonMobil's proposed ''Monitoring Plan'' is described below this section. ExxonMobil understand that this monitoring plan would be subject to review by NMFS and that refinements may be required. Two main types of monitoring would be performed for this proposed project: (1) in-situ measurement of sound pressure levels; and (2) visual observations of the number and type of marine mammals that enter sound exposure zones. In-situ acoustic data would be used to validate model predictions of sound pressure levels near and with distance from the conductor pipe sound source, including the predicted maximum distances for the buffer and exclusion zones. If measured results differ from modeled results, measured data would be used to revise buffer and exclusion zone boundaries to reflect actual conditions during proposed project activities. Data from visual monitoring would be used to validate take estimate calculations.

Acoustic Monitoring

Acoustic monitoring using hydrophones and microphones would be conducted to obtain and validate modeled in-water and in-air sound levels during the proposed pile-driving activities. Each hydrophone (in-water) and microphone (in-air) would be calibrated following the manufacturer's recommendations prior to the start of the proposed project and checked for accuracy and precision at the end of the data collection for each conductor pipe or as practical during conductor pipe installation activities. Environmental data would be collected to supplement the acoustic monitoring and include: wind speed and direction, air temperature, humidity, near-surface water temperature, weather conditions, and other appropriate factors that could contribute to influencing either in-air or in-water sound transmission levels. Prior to deploying monitoring equipment, the acoustics specialist would be provided with the hammer model and size, hammer energy settings, and projected blows per minute for the conductor pipe segments requiring hammer pile-driving. Background in-air and in-water sound levels would be measured at Harmony Platform in the absence of pile-driving activities to obtain an ambient noise level, and recorded over a frequency range of 10 Hz to 20 kHz. Ambient noise level measurements would be conducted before, during, and after the project. The measured in-air and in-water sound data would be used to recalibrate and refine the sound propagation model used to determine the buffer and exclusion zones. Also, sound pressure levels associated with ramp-up techniques would be measured.

In-Water Monitoring—Acoustic monitoring would be performed at a minimum of two fixed stations located at 10 m (32.8 ft) and approximately 325 m (1,066.3 ft) from the conductor pipe sound source. These distances represent the 180 dB and 160 dB (rms) modeled sound levels. The following general approach would be used to measure in-water sound levels:

• Acoustic monitoring would be conducted over the entire pile-driving period for each conductor pipe, starting approximately 1 hour prior to pile-driving through 1 hour after impact hammering has stopped. Pre- and post-hammer pile-driving data would be used to determine ambient/background noise levels.

• A stationary hydrophone system with the ability to measure and record sound pressure levels would be deployed at a minimum of two monitoring locations (stations). SPLs would be recorded in voltage, converted to microPascals (μPa), and post-processed to decibels (dB [re 1 μPa]). For the first conductor pipe installation, hydrophones are placed at 10+/−1 m and at 325+/−33 m from the conductor pipe at depths ranging from 10 to 30 m (32.8 to 98.4 ft) below the water surface to avoid potential inferences for surface water energy, and to target the depth range of maximum occurrence of marine mammals most likely in the area during the project. The equipment would obtain data for the most likely depth range of marine mammal occurrence. Horizontal displacement of +/−10% may be expected for instrument movement due to the water depth and forces from tides, currents, and storms. Additional hydrophone mooring systems may be deployed at additional distances and/or depths. Following each successive conductor pipe installation, the water depth and geographical orientation of the hydrophone may be changed to validate modeled SPLs at varying water depths and direction.

• At a minimum, the following sound data would be analyzed (post-processed) from recorded sound levels: absolute peak overpressure and under pressure levels for each conductor pipe; average, minimum, and maximum sound pressure levels (rms), integrated from 3 Hz to 20 kHz; average duration of each hammer strike (blow), and total number of strikes per continuous hammer pile-driving period for each conductor.

In the event that field measurements indicate different sound pressure levels (rms) values than those predicted by modeling for either the maximum distances of the buffer or exclusion zones from the conductor sound source, corresponding boundaries for the buffer and appropriate exclusion zones would be increased/decreased accordingly, following NMFS notification, concurrence, and authorization.

In-Air Monitoring—Reference measurements would be made at approximately 10 to 20 m (32.8 to 65.6 ft) from the initial hammer strike position using a stationary microphone. The microphone would be placed as far away from other large sound sources as practical. The in-air buffer zone predicted for pinnipeds (non-harbor seal, 100 dB re 20 μPa) was estimated at 41 m (134.5 ft) from the hammer impact point on the conductor pipe. In-air sound levels would be recorded at several points around the base of the Harmony Platform at sea level to validate modeled sound levels. Distances closer to the sound source may be monitored for model validation purposes, but only if safety issues are not introduced. Recorded data would be recorded as dB (re 20 μPa, A-weighted and unweighted) for comparison to in-air noise thresholds for Level B harassment for pinnipeds.

Platform-Based Visual Monitoring

PSOs would be based aboard the Harmony Platform and would watch for marine mammals near the platform during conductor pipe installation activities during daytime and nighttime pile-driving activities. Visual monitoring for marine mammals would be performed at a minimum during periods of active hammer pile-driving throughout the proposed project following general procedures in Baker *et al.* (2013). Monitoring by PSOs would begin at least 30 minutes before the start of impact hammer pile-driving, continue through an estimated 2.5 to 3.3 hours of pile-driving, and conclude 30

minutes after pile-driving stops (up to 4.3 hours of monitoring per a period of pile-driving). Five to 7 periods of impact hammer pile-driving would be required for each conductor pipe. When feasible, PSOs would conduct observations during periods when the impact hammer pile-driving is not operating for comparison of sighting rates and behavior with and without operations and between pile-driving periods. In addition to monitoring during pile-driving activities, baseline monitoring of marine mammals would be performed up to one week before and one week after conductor pipe installation, as well as selected periods in between impact hammer pile-driving activities.

The exclusion zone would be monitored to prevent injury to marine mammal species. Based on PSO observations, the impact hammer pile-driving would be shut-down when marine mammals are observed within or about to enter the designated exclusion zone. The exclusion zone is a region in which a possibility exists of adverse effects on animal hearing or physical effects. A comprehensive monitoring plan would be developed to ensure compliance with the IHA for this proposed project.

Methods—There would be a team of 3 PSOs based aboard Harmony Platform conducting monitoring during active hammer pile-driving periods. Visual observations would take place during active hammering periods which includes both daylight and nighttime operations. This monitoring would occur for approximately 4.3 hours (3.3 hour monitoring plus 0.5 hour pre- and post-hammering) during a single hammering phase followed by approximately 6.3 hours of off-duty rest. A total of 5 to 7 observation periods corresponding to the driving of the pipe segments would be anticipated for each of the six conductors. It is possible that an impact hammer pile-driving session would take less than 3.3 hours and that the ''rest interval'' for the visual monitors separating driving segments would be less than 6.3 hours. If driving and rest intervals are reduced and additional segments are added (e.g., seven instead of five), two alternating teams of three PSOs may be required. At the conclusion of impact hammer pile-driving activities for a single conductor pipe, PSOs may be transferred to shore to await the next active pile-driving phase.

PSOs would be placed at the best practicable vantage point(s) (e.g., lower platform level, upper platform level) to monitor the applicable buffer and exclusion zones for marine mammals. The PSOs would have authority to implement shut-down/delay ramp-up procedures, if applicable, by calling the hammer operator for a shut-down via radio communication. For the buffer zone, two PSOs would be stationed on an upper platform deck where they have a clear view of the monitoring area. They would be approximately 180 degrees apart and each would monitor approximately one-half of the corresponding buffer zone and beyond with binoculars and other appropriate equipment. For exclusion zone area, one PSO would concurrently monitor the applicable radii for pinnipeds and cetaceans, respectively, from a lower level observation post that provides a clear view of the sea surface around the actively driven conductor pipe. The lower observation area would be illuminated during nighttime observations. Visual aids may be used but would not be required, providing the PSO has a clear view of the sea surface with the naked eye. A non-PSO safety spotter would also be assigned to the lower deck observation area. The safety spotter would be available to deter errant California sea lions using NMFS-recommended methods (see below) (NMFS, 2008).

All personnel operating on the Harmony Platform would be required to receive required training and wear appropriate personal protective equipment. Personal protective equipment is specific to the task, location, and environmental conditions (e.g., weather, operations risks). It includes items such as floatation vests, hard hats, steel-toed shoes, gloves, fire-resistant clothing, gear, eye protection, and other protective equipment. Details on specific personal protective equipment items required for PSO and acoustic monitoring would be determined via the regular work risk assessment process, and would be presented in the associated monitoring plans for the project.

Equipment for monitoring would include hearing protection from where observations are made from high noise areas of the platform, marine radios with headsets, time keeping device (e.g., watch or cell phone), day and night range finding binoculars (7 x 50 or greater), notebooks with standardized recording forms, species identification guides, and a project-specific monitoring plan approved by NMFS (to be submitted separately).

PSO Qualifications—Monitoring would be conducted by qualified PSOs defined in Baker *et al.* (2013) and approved by NMFS. PSOs dedicated to the proposed project would have no other activity-related tasks.

PSO Data and Documentation

PSOs would record data to estimate the numbers of marine mammals exposed to various received sound levels and to document apparent disturbance reactions or lack thereof. Data would be used to estimate numbers of animals potentially ''taken'' by harassment (as defined in the MMPA). They would also provide information needed to order a shut-down of the impact hammer when a marine mammal is within or near the exclusion zone. Visual observations would also be made during pile-driving activities as well as daytime periods from the Harmony Platform when the regular operations would be underway without pile-driving activities to collect baseline biological data.

When a sighting is made, the following information about the sighting would be recorded:

1. Species, group size, age/size/sex categories (if determinable), behavior when first sighted and after initial sighting, heading (if consistent), bearing and distance from platform, sighting cue, apparent reaction to the sound source (e.g., none, avoidance, approach, paralleling, etc., and including responses to ramp-up), speed of travel, and duration of presence.

2. Date, time, location, heading, speed, activity of the conductor pipe installation activities, weather conditions, Beaufort sea state and wind force, visibility, and sun glare.

The data listed under (2) would also be recorded at the start and end of each observation watch, and during a watch whenever there is a change in one or more of the variables.

All observations, as well as information regarding ramp-ups or shut-downs would be recorded in a standardized format.

Results from the platform-based visual observations would provide the following information:

1. The basis for real-time mitigation (impact hammer shut-down).

2. Information needed to estimate the number of marine mammals potentially taken by harassment, which must be reported to NMFS.

3. Data on the occurrence, distribution, and activities of marine mammals in the area where the conductor pipe installation activities are conducted.

4. Information to compare the distance and distribution of marine mammals relative to the source platform at times with and without pile-driving activities.

5. Data on the behavior and movement patterns of marine mammals

seen at times with and without pile-driving activities.

Proposed Reporting

ExxonMobil would submit a comprehensive report to NMFS within 90 days after the end of the conductor pipe installation activities and the expiration of the IHA (if issued). The report would describe the proposed pile-driving activities that were conducted and sightings of marine mammals near the operations. The report submitted to NMFS would provide full documentation of methods, results, and interpretation pertaining to all monitoring. The 90-day report would summarize the dates and location of impact hammer pile-driving activities and all marine mammal sightings (i.e., dates, times, locations, activities, and associated seismic survey activities). The report would minimally include:

- Summaries of monitoring effort—total hours, total distances, and distribution of marine mammals through the activity period accounting for Beaufort sea state and other factors affecting visibility and detectability of marine mammals;
- Analyses of the effects of various factors influencing detectability of marine mammals including Beaufort sea state, number of PSOs, and fog/glare;
- Species composition, occurrence, and distribution of marine mammals sightings including date, water depth, numbers, age/size/gender, and group sizes; and analyses of the effects of activities;
- Sighting rates of marine mammals during periods with and without impact hammer pile-driving activities (and other variables that could affect detectability);
- Initial sighting distances versus operational activity state;
- Closest point of approach versus operational activity state;
- Observed behaviors and types of movements versus operational activity state;
- Numbers of sightings/individuals seen versus operational activity state; and
- Distribution around the platform versus operational activity state.

The report would also include estimates of the number and nature of exposures that could result in ''takes'' of marine mammals by harassment or in other ways (based on presence in the buffer and/or exclusion zones). After the report is considered final, it would be publicly available on the NMFS Web site at: *http://www.nmfs.noaa.gov/pr/permits/incidental.htm#iha*.

Reporting Prohibited Take—In the unanticipated event that the specified activity clearly causes the take of a marine mammal in a manner prohibited by this IHA, such as an injury (Level A harassment), serious injury, or mortality (e.g., ship-strike, gear interaction, and/or entanglement), ExxonMobil would immediately cease the specified activities and immediately report the incident to the Chief of the Permits and Conservation Division, Office of Protected Resources, NMFS at 301–427–8401 and/or by email to *Jolie.Harrison@noaa.gov* and *Howard.Goldstein@noaa.gov* and the West Coast Regional Stranding Coordinator (*Justin.Greenman@noaa.gov*). The report must include the following information:

- Time, date, and location (latitude/longitude) of the incident;
- Type of activity involved;
- Description of the circumstances during and leading up to the incident;
- Status of all sound source use in the 24 hours preceding the incident;
- Water depth;
- Environmental conditions (e.g., wind speed and direction, Beaufort sea state, cloud cover, and visibility);
- Description of all marine mammal observations in the 24 hours preceding the incident;
- Species identification or description of the animal(s) involved;
- Fate of the animal(s); and
- Photographs or video footage of the animal(s) (if equipment is available).

Activities shall not resume until NMFS is able to review the circumstances of the prohibited take. NMFS shall work with ExxonMobil to determine what is necessary to minimize the likelihood of further prohibited take and ensure MMPA compliance. ExxonMobil may not resume their activities until notified by NMFS via letter or email, or telephone.

Reporting an Injured or Dead Marine Mammal with an Unknown Cause of Death—In the event that ExxonMobil discovers an injured or dead marine mammal, and the lead PSO determines that the cause of the injury or death is unknown and the death is relatively recent (i.e., in less than a moderate state of decomposition as described in the next paragraph), ExxonMobil would immediately report the incident to the Chief of the Permits and Conservation Division, Office of Protected Resources, NMFS, at 301–427–8401, and/or by email to *Jolie.Harrison@noaa.gov* and *Howard.Goldstein@noaa.gov*, and the NMFS West Coast Regional Office (1–866–767–6114) and/or by email to the West Coast Regional Stranding Coordinator (*Justin.Greenman@noaa.gov*). The report must include the same information identified in the paragraph above. Activities may continue while NMFS reviews the circumstances of the incident. NMFS would work with ExxonMobil to determine whether modifications to the activities are appropriate.

Reporting an Injured or Dead Marine Mammal Not Related to the Activities—In the event that ExxonMobil discovers an injured or dead marine mammal, and the lead PSO determines that the injury or death is not associated with or related to the activities authorized in the IHA (e.g., previously wounded animal, carcass with moderate or advanced decomposition, or scavenger damage), ExxonMobil would report the incident to the Chief of the Permits and Conservation Division, Office of Protected Resources, NMFS, at 301–427–8401, and/or by email to *Jolie.Harrison@noaa.gov* and *Howard.Goldstein@noaa.gov,* and the NMFS West coast Regional Office (1–866–767–6114) and/or by email to the West Coast Regional Stranding Coordinator (*Justin.Greenman@noaa.gov*), within 24 hours of discovery. ExxonMobil would provide photographs or video footage (if available) or other documentation of the stranded animal sighting to NMFS and the Marine Mammal Stranding Network. Activities may continue while NMFS reviews the circumstances of the incident.

Estimated Take by Incidental Harassment

Except with respect to certain activities not pertinent here, the MMPA defines ''harassment'' as: any act of pursuit, torment, or annoyance which (i) has the potential to injure a marine mammal or marine mammal stock in the wild [Level A harassment]; or (ii) has the potential to disturb a marine mammal or marine mammal stock in the wild by causing disruption of behavioral patterns, including, but not limited to, migration, breathing, nursing, breeding, feeding, or sheltering [Level B harassment].

TABLE 4—NMFS'S CURRENT UNDERWATER AND IN-AIR ACOUSTIC EXPOSURE CRITERIA

Criterion	Criterion definition	Threshold
Impulsive (Non-Explosive) Sound		
Level A harassment (injury)	Permanent threshold shift (PTS) (Any level above that which is known to cause TTS).	180 dB re 1 μPa-m (root means square [rms]) (cetaceans) 190 dB re 1 μPa-m (rms) (pinnipeds).
Level B harassment	Behavioral disruption (for impulsive noise)	160 dB re 1 μPa-m (rms).
Level B harassment	Behavioral disruption (for continuous noise)	120 dB re 1 μPa-m (rms).
In-Air Sound		
Level A harassment	NA	NA.
Level B harassment	Behavioral disruption	90 dB re 20 μPa (harbor seals). 100 dB re 20 μPa (all other pinniped species). NA (cetaceans).

Level B harassment is anticipated and proposed to be authorized as a result of the proposed conductor pipe installation activities at the Harmony Platform in the Santa Barbara Channel offshore of California. Acoustic stimuli (i.e., increased underwater and in-air sound) generated during the pile-driving activities are expected to result in the behavioral disturbance of some marine mammals. There is no evidence that the planned activities could result in injury, serious injury, or mortality for which ExxonMobil seeks the IHA. The required mitigation and monitoring measures would minimize any potential risk for injury, serious injury, or mortality.

The following sections describe ExxonMobil's methods to estimate take by incidental harassment and present the applicant's estimates of the numbers of marine mammals that could be affected during the proposed conductor pipe installation activities at the Harmony Platform in the Santa Barbara Channel offshore of California. The estimated takes were calculated using information on sound source levels, sound propagation, maximum distances from the sound source to Level A and Level B harassment exposure thresholds, and estimated density of marine mammals in the action area. Take estimates were calculated for in-water (cetaceans and pinnipeds) and in-air (pinnipeds only). The estimates are based on the following information:

- Thresholds for marine mammals to in-water and in-air noise;
- Sound levels at the conductor pipe from hammer strike;
- Sound propagation (transmission/spreading loss) through the environment (i.e., air, water);
- Maximum distances from the sound sources to the corresponding impact zones (based on Level A and Level B harassment thresholds) for marine mammals;
- Density estimate for each species of marine mammals (calculated as stock abundance divided by 12,592 km^2 [3,671.2 nmi^2] area [except where noted]); and
- Number of takes for each species of marine mammals within a group (calculated as density multiplied by buffer/exclusion zone multiplied by days of activity).

Sound levels for impulsive (impact) pile-driving by the hammer and propagation through water and in-air at the Harmony Platform were modeled by JASCO Applied Sciences, Ltd. The modeling results are presented in JASCO's acoustic modeling report as an addendum to the IHA application titled ''Assessment of Airborne and Underwater Noise from Pile Driving Activities at the Harmony Platform.'' Methods used to estimate marine mammal densities and takes for the proposed action area in the Santa Barbara Channel are presented in Sections 6.1.5 and 6.1.6 of the IHA application for likely exposures to species of marine mammals.

Densities of marine mammal species likely to occur in the proposed action area of the Santa Barbara Channel were taken directly from scientific literature or calculated using corresponding abundances in NMFS Stock Assessment Reports. Density estimates for the blue, fin, and humpback whale were taken directly from Redfern *et al.* (2013), using the upper limit reported for the density contour that includes the Harmony Platform. Redfern *et al.* (2013) estimated densities for these three species using NMFS sightings collected from primarily August through November over a period from 1991 to 2009 throughout the Santa Barbara Channel. Results for blue, fin, and humpback whales are presented in Figures 6–3, 6–4, and 6–5 of the IHA application. These densities are considered more accurate than those based on reported stock abundances because even though they are for the same monthly period and geographical location, they include a correction factor to correct for non-observational periods. For calculated densities of likely affected marine mammal species, stock abundances, which generally range from the state of Washington to northern Baja California, Mexico, were assumed to be concentrated within the 12,593 km^2 (3,671.5 nmi^2) proposed action area in the Santa Barbara Channel. The proposed action area includes the Harmony Platform, and extends 18 km (9.7 nmi) to the north, 60 km (32.4 nmi) to the west, and 70 km (37.8 nmi) to the south of Point Conception, California. The eastern boundary is 35 km (18.9 nmi) east of Anacapa Island. Use of this area produces a conservative density estimate because the geographical range of each marine mammal species evaluated is much greater than 70 km (nmi) of the coastline selected to represent the proposed action area, including season-specific ranges for species that migrate (e.g., gray whale). For marine mammal species potentially exposed to in-air noise, pinniped densities were calculated by dividing the stock abundance for each marine mammal species by the 1,130 m^2 (12,163.2 ft^2) impact area of the Harmony Platform near sea level where the animals could potentially haul-out and/or have their heads out of the water. Tables 6–7 and 6–8 of the IHA application describe the calculated densities and estimated take by marine mammal species as well as associated data for the in-water and in-air sound thresholds, respectively. Although there is some uncertainty about the representativeness of the data and the assumptions used in the calculations below, the approach used here is believed to be the best available approach.

TABLE 5—ESTIMATED DENSITIES AND POSSIBLE NUMBER OF MARINE MAMMAL SPECIES THAT MIGHT BE EXPOSED TO GREATER THAN OR EQUAL TO 160 dB (PILE-DRIVING ACTIVITIES) DURING EXXONMOBIL'S PROPOSED CONDUCTOR PIPE INSTALLATION ACTIVITIES IN THE SANTA BARBARA CHANNEL OFFSHORE OF CALIFORNIA

Species	Density in action area (#/km^2) [1]	Calculated take from pile-driving activities in-water (i.e., estimated number of individuals exposed to sound levels ≥160 dB re 1 μPa) [2]	Calculated take from pile-driving activities in-air (i.e., estimated number of individuals exposed to sound levels ≥90 dB re 20 μPa for harbor seals and 90 dB re 20 μPa for all other pinnipeds) [3]	Total requested take authorization [4]	Abundance [5]	Approximate percentage of population/stock estimate [6]	Population trend [5]
Mysticetes:							
North Pacific right whale.	NA	0	0	0	NA (18 to 21)—Eastern North Pacific stock.	NA	NA.
Gray whale	0.5067	0.693	0	10	19,126 (18,107)—Eastern North Pacific stock. 155 (142)—Western North Pacific population.	0.05	Increasing over past several decades—Eastern North Pacific stock.
Humpback whale	0.0055	0.007	0	1	1,918 (1,876)—CA/OR/WA stock.	0.05	Increasing.
Minke whale	0.04	0.055	0	1	478 (202)—CA/OR/WA stock.	0.2	NA.
Bryde's whale	NA	0	0	0	NA	NA	NA.
Sei whale	0.01	0.014	0	1	126 (83)—Eastern North Pacific stock.	0.8	NA.
Fin whale	0.004	0.005	0	1	3,051 (2,598)—CA/OR/WA stock.	0.03	Increasing.
Blue whale	0.008	0.011	0	1	1,647 (1,551)—Eastern North Pacific stock.	0.06	NA.
Odontocetes:							
Sperm whale	0.08	0.109	0	1	971 (751)—CA/OR/WA stock.	0.1	NA.
Pygmy sperm whale	0.05	0.068	0	1	579 (271)—CA/OR/WA stock.	0.17	NA.
Dwarf sperm whale	NA	0	0	0	NA—CA/OR/WA stock	NA	NA.
Baird's beaked whale	0.07	0.096	0	1	847 (466)—CA/OR/WA stock.	0.12	NA.
Cuvier's beaked whale.	0.17	0.233	0	1	6,950 (4,481)—CA/OR/WA stock.	0.01	Declining off CA/OR/WA.
Mesoplodon beaked whale.	0.08	0.109	0	1	694 (389)—CA/OR/WA stock.	0.14	Declining off CA/OR/WA.
Killer whale	0.05	0.068	0	1	240 (162)—Eastern North Pacific stock. 346 (346)—Eastern North Pacific Transient stock. 354 (354)—West Coast Transient stock.	0.42/0.29/0.28	NA—Eastern North Pacific Offshore stock; NA—Eastern North Pacific Transient stock; Increasing—West Coast Transient stock.
Short-finned pilot whale.	0.06	0.082	0	1	760 (465)—CA/OR/WA stock.	0.13	NA.
Bottlenose dolphin	0.11	0.151	0	10	1,006 (684)—CA/OR/WA stock.	0.1	NA—CA/OR/WA Offshore stock; NA—CA Coastal stock.
Striped dolphin	0.87	1.191	0	20	10,908 (8,231)—CA/OR/WA stock.	0.18	NA.
Short-beaked common dolphin.	32.65	44.691	0	45	411,211 (343,990)—CA/OR/WA stock.	0.01	Varies with oceanographic conditions.
Long-beaked common dolphin.	8.5	11.635	0	120	107,016 (76,224)—CA stock.	0.11	Increasing over last 30 years.
Pacific white-sided dolphin.	2.14	2.929	0	30	26,930 (21,406)—CA/OR/WA stock.	0.11	NA.
Northern right whale dolphin.	0.66	0.903	0	1	8,334 (6,019)—CA/OR/WA stock.	0.01	NA.
Risso's dolphin	0.5	0.684	0	10	6,272 (4,913)—CA/OR/WA stock.	0.16	NA.
Dall's porpoise	3.34	4.572	0	50	42,000 (32,106)—CA/OR/WA stock.	0.12	NA.
Harbor porpoise	0	0	0	0	NA	NA	NA.
Pinnipeds:							
California sea lion	23.6	32.249	0	33	296,750 (153,337)—U.S. stock.	0.01	Increasing.

TABLE 5—ESTIMATED DENSITIES AND POSSIBLE NUMBER OF MARINE MAMMAL SPECIES THAT MIGHT BE EXPOSED TO GREATER THAN OR EQUAL TO 160 dB (PILE-DRIVING ACTIVITIES) DURING EXXONMOBIL'S PROPOSED CONDUCTOR PIPE INSTALLATION ACTIVITIES IN THE SANTA BARBARA CHANNEL OFFSHORE OF CALIFORNIA—Continued

Species	Density in action area (#/km²) [1]	Calculated take from pile-driving activities in-water (i.e., estimated number of individuals exposed to sound levels ≥160 dB re 1 μPa) [2]	Calculated take from pile-driving activities in-air (i.e., estimated number of individuals exposed to sound levels ≥90 dB re 20 μPa for harbor seals and 90 dB re 20 μPa for all other pinnipeds) [3]	Total requested take authorization [4]	Abundance [5]	Approximate percentage of population/stock estimate [6]	Population trend [5]
Steller sea lion	NA	0	0	0	49,685 (42,366)—Western stock. 58,334 (72,223)—Eastern stock.	NA	Declining—Western stock; Increasing—Eastern stock; Declining in CA.
Pacific harbor seal	2.4	3.285	0.011	4	30,196 (26,667)—CA stock.	0.01	Increased 1981 to 2004.
Northern elephant seal.	9.85	13.483	0	14	124,000 (74,913)—CA breeding stock.	0.01	Increasing through 2005.
Northern fur seal	0.79	1.081	0	2	12,844 (6,722)—California stock.	0.02	Increasing.
Guadalupe fur seal	NA	0	0	0	7,408 (3,028)—Mexico to CA stock.	NA	Increasing.

NA = Not available or not assessed.
[1] Proposed action area (12,593 km²) in the Santa Barbara Channel off the coast of California.
[2] Calculated take is the estimated number of animals in the in-water ensonified buffer zone multiplied by the number of days.
[3] Calculated take is the estimated number of animals in the in-air ensonified buffer zone multiplied by the number of days.
[4] Requested Take Authorization includes calculated takes for animals in the ensonified in-water and in-air buffer zones.
[5] NMFS Marine Mammal Stock Assessment Reports.
[6] Total requested (and calculated) takes expressed as percentages of the species or stock.

Numbers of marine mammals that might be present and potentially disturbed are estimated based on the available data about marine mammal distribution and densities in the proposed Santa Barbara Channel action area. ExxonMobil estimated the number of different individuals of marine mammal species that may be exposed to in-water and in-air sounds with received levels greater than or equal to 160 dB re 1 μPa (rms) and in-air sounds with received levels greater than or equal to 90 dB re 20 μPa (rms) (for harbor seals)/100 dB re 20 μPa (rms) (for all other pinniped species) for impact hammer pile-driving activities on one or more occasions by considering the total marine area that would be within the 160 dB in-water radius and 90 dB (for harbor seals)/100 dB (for all other pinniped species) in-air radius around the impact hammer pile-driving on at least one occasion and the expected density of marine mammals in the area (in the absence of the conductor pipe installation activities). The number of possible exposures can be estimated by considering the total marine area that would be within the in-water 160 dB radius and in-air 90 dB (for harbor seals)/100 dB (for all other pinniped species) radius around the impact hammer pile-driving activities. The in-water 160 dB and in-air 90 dB (harbor seal)/100 dB (for all other pinniped species) radii are based on acoustic modeling data for the impact hammer pile-driving activities that may be used during the proposed action (see of the addendum to the IHA application). It is unlikely that a particular animal would stay in the area during the entire impact hammer pile-driving activities.

The number of different individuals potentially exposed to received levels greater than or equal to 160 dB re 1 μPa (rms) for in-water noise and 90 dB re 20 μPa (rms) (for harbor seals)/100 dB re 20 μPa (rms) (for all other pinniped species) for in-air noise from impact hammer pile-driving activities was calculated by multiplying:

(1) The expected species density (in number/km²), times

(2) The anticipated area to be ensonified to that level during conductor pipe installation (buffer zone = π x [maximum distance]²), times

(3) The number of days of the conductor pipe installation activities.

Applying the approach described above, approximately 0.3318 km² would be ensonified within the in-water 160 dB isopleth and approximately 0.0053 km²/0.0475 km² would be ensonified within the in-air 90 dB (harbor seals)/100 dB (for all other pinniped species) isopleths for impact hammer pile-driving activities (assuming omnidirectional spreading of sound from the conductor pipe) during the proposed conductor pipe installation activities. The take calculations within the proposed action area account for animals in the initial density snapshot and account for new (i.e., turnover) or previously exposed animals over an approximate 4-day period that approach and enter the area ensonified above or equal to the 160 dB isopleth for in-water noise and 90/100 dB isopleth for in-air noise from the impact hammer pile-driving activities; however, studies suggest that many marine mammals would avoid exposing themselves to sounds at these level, which suggests that there would not necessarily be a large number of new animals entering the proposed action area once the conductor pipe installation activities started. Also, the approach assumes that no cetaceans or pinnipeds would move away or toward the Harmony Platform. The take estimates represent the number of individuals that are expected (in absence of a conductor pipe installation activities) to occur over an approximate 4-day period of time in the waters that would be exposed to greater than or equal to 160 dB (rms) in-water and greater than or equal to 90/100 dB (rms) in-air for impact hammer pile-driving activities.

ExxonMobil's estimates of exposures to various sound levels assume that the proposed activities would be carried out in full. The estimates of the numbers of marine mammals potentially exposed to 160 dB (rms) for in-water noise and 90 dB re 20 μPa (rms) (for harbor seals)/100

dB re 20 μPa (rms) (for all other pinniped species) for in-air noise received levels are precautionary and probably overestimate the actual numbers of marine mammals that could be involved. These estimates include standard contingencies for weather, equipment, or mitigation delays in the time planned for the proposed activities.

Table 5 shows the estimates of the number of different individual marine mammals anticipated to be exposed to greater than or equal to 160 dB re 1 μPa (rms) for the conductor pipe installation activities if no animals moved away from the Harmony Platform. No takes by Level A harassment have been requested. The total requested take authorization is given in the fifth column of Table 5.

Encouraging and Coordinating Research

ExxonMobil would coordinate the planned marine mammal monitoring program associated with the proposed conductor pipe installation activities with researchers and other parties that express interest in this activity, area, and anthropogenic sound effects on marine mammals. ExxonMobil would coordinate with applicable U.S. agencies (e.g., NMFS), and would comply with their requirements.

ExxonMobil supports research on marine mammals and sound in the environment through academic, industry, and private sector collaborations. ExxonMobil is a founding member and largest contributor to the Sound and Marine Life Joint Industry Program (JIP) through the International Oil and Gas Producers (OGP), and the International Association of Geophysical Contractors (IAGC). Through JIP and other venues, ExxonMobil provides annual funding and support for fundamental and applied scientific research to better understand the effects of anthropogenic sound on marine life. ExxonMobil also conducts internal research and monitoring programs specific to sound effects from exploration and production activities. These efforts have helped produce effective mitigation strategies and techniques to reduce potential sound effects on marine mammals from their operations and those from the oil and gas industry as a whole. More information on selected examples of ExxonMobil's involvement and contributions to scientific research on marine mammals and sound can be found in section 14 of the IHA application.

Impact on Availability of Affected Species or Stock for Taking for Subsistence Uses

Section 101(a)(5)(D) of the MMPA also requires NMFS to determine that the authorization would not have an unmitigable adverse effect on the availability of marine mammal species or stocks for subsistence use. There are no relevant subsistence uses of marine mammals implicated by this action. Therefore, NMFS has determined that the total taking of affected species or stocks would not have an unmitigable adverse impact on the availability of such species or stocks for taking for subsistence purposes.

Analysis and Preliminary Determinations

Negligible Impact

Negligible impact is ''an impact resulting from the specified activity that cannot be reasonably expected to, and is not reasonably likely to, adversely affect the species or stock through effects on annual rates of recruitment or survival'' (50 CFR 216.103). A negligible impact finding is based on the lack of likely adverse effects on annual rates of recruitment or survival (i.e., population-level effects). An estimate of the number of Level B harassment takes, alone, is not enough information on which to base an impact determination. In addition to considering estimates of the number of marine mammals that might be ''taken'' through behavioral harassment, NMFS must consider other factors such as the likely nature of any responses (their intensity, duration, etc.), the context of any responses (critical reproductive time or location, migration, etc.), as well as the number and nature of estimated Level A harassment takes, the number of estimated mortalities, and effects on habitat.

In making a negligible impact determination, NMFS evaluated factors such as:

(1) The number of anticipated injuries, serious injuries, or mortalities;

(2) The number, nature, and intensity, and duration of Level B harassment (all relatively limited); and

(3) The context in which the takes occur (i.e., impacts to areas of significance, impacts to local populations, and cumulative impacts when taking into account successive/contemporaneous actions when added to baseline data);

(4) The status of stock or species of marine mammals (i.e., depleted, not depleted, decreasing, increasing, stable, impact relative to the size of the population);

(5) Impacts on habitat affecting rates of recruitment/survival; and

(6) The effectiveness of monitoring and mitigation measures.

As described above and based on the following factors, the specified activities associated with the conductor pipe installation activities are not likely to cause PTS, or other non-auditory injury, serious injury, or death. The factors include:

(1) The likelihood that marine mammals are expected to move away from a noise source that is annoying prior to its becoming potentially injurious;

(2) The potential for temporary or permanent hearing impairment is relatively low and would likely be avoided through the implementation of the required monitoring and mitigation (i.e., shut-down) measures;

(3) The fact that cetaceans and pinnipeds would have to be closer than 10 m and 3.5 m, respectively, during impact hammer pile-driving activities to be exposed to levels of underwater sound believed to have a minimal chance of causing a permanent threshold shift (PTS; i.e., Level A harassment); and

(4) The likelihood that marine mammal detection ability by trained PSOs is high at close proximity to the platform.

No injuries, serious injuries, or mortalities are anticipated to occur as a result of ExxonMobil's planned conductor pipe installation activities, and none are proposed to be authorized by NMFS. Table 5 of this document outlines the number of requested Level B harassment takes that are anticipated as a result of these activities. NMFS's practice has been to apply the 160 dB re 1 μPa (rms) received level threshold for underwater impulse sound levels to determine whether take by Level B harassment occurs. Southall *et al.* (2007) provide a severity scale for ranking observed behavioral responses of both free-ranging marine mammals and laboratory subjects to various types of anthropogenic sound (see Table 4 in Southall *et al.* [2007]). Current NMFS practice, regarding exposure of marine mammals to high-level in-air sounds, as a threshold for potential Level B harassment, is at or above 90 dB re 20 μPa for habor seals and at or above 100 dB re 20 μPa for all other pinniped species (Lawson *et al.,* 2002; Southall *et al.,* 2007). NMFS has not determined Level A harassment thresholds for marine mammals for in-air noise.

As mentioned previously, NMFS estimates that 30 species of marine mammals under its jurisdiction could be potentially affected by Level B

harassment over the course of the IHA. The population estimates for the marine mammal species that may be taken by Level B harassment were provided in Table 3 and 5 of this document. Due to the nature, degree, and context of Level B (behavioral) harassment anticipated and described (see ''Potential Effects on Marine Mammals'' section above) in this notice, the proposed activity is not expected to impact rates of annual recruitment or survival for any affected species or stock, particularly given NMFS's and the applicant's proposal to implement mitigation, monitoring, and reporting measures to minimize impacts to marine mammals. Additionally, the proposed conductor pipe installation activities would not adversely impact marine mammal habitat.

For the marine mammal species that may occur within the proposed action area, there are no known designated or important feeding and/or reproductive areas. Many animals perform vital functions, such as feeding, resting, traveling, and socializing, on a diel cycle (i.e., 24 hr cycle). Behavioral reactions to noise exposure (such as disruption of critical life functions, displacement, or avoidance of important habitat) are more likely to be significant if they last more than one diel cycle or recur on subsequent days (Southall *et al.,* 2007). Potential impacts are not likely to be significant from the proposed pile-driving activities as the use of the impact hammer would occur over 30 intermittent intervals of 2.5 to 3.3 hours each for a combined total of about 4 days spread out over a 91-day period. Additionally, the conductor pipe installation activities would be increasing sound levels in the marine environment in a relatively small area surrounding the Harmony Platform (compared to the range of the animals), and some animals may only be exposed to and harassed by sound for less than a day.

Of the 36 marine mammal species under NMFS jurisdiction that may or are known to likely to occur in the proposed action area, seven are listed as threatened or endangered under the ESA: North Pacific right, humpback, sei, fin, blue, and sperm whale and Guadalupe fur seal. These species are also considered depleted under the MMPA. Of these ESA-listed species, incidental take has been requested to be authorized for humpback, sei, fin, blue, and sperm whales. There is generally insufficient data to determine population trends for the other depleted species in the action area. To protect these animals (and other marine mammals in the action area), ExxonMobil must cease impact hammer pile-driving activities if any marine mammal enters designated exclusion zones. No injury, serious injury, or mortality is expected to occur and due to the nature, degree, and context of the Level B harassment anticipated, and the activities are not expected to impact rates of recruitment or survival.

NMFS has preliminarily determined, provided that the aforementioned mitigation and monitoring measures are implemented, the impact of conducting pile-driving activities in the Santa Barbara Channel off the coast of California, may result, at worst, in a modification in behavior and/or low-level physiological effects (Level B harassment) of certain species of marine mammals.

Changes in diving/surfacing patterns, habitat abandonment due to loss of desirable acoustic environment, and cessation of feeding or social interaction are some of the significant behavioral modifications that could potentially occur as a result of the proposed conductor pipe installation activities. While behavioral modifications, including temporarily vacating the area during the impact hammer pile-driving activities, may be made by these marine mammal species to avoid the resultant acoustic disturbance, the availability of alternate areas within these areas for species and the short and sporadic duration of the conductor pipe installation activities, have led NMFS to preliminary determine that the taking by Level B harassment from the specified activity would have a negligible impact on the affected species in the specified geographic region. NMFS believes that the length of the conductor pipe installation activities (duration of approximately 4 days total), the requirement to implement mitigation measures (e.g., shut-down of impact hammer pile-driving activities), and the inclusion of the monitoring and reporting measures, would reduce the amount and severity of the potential impacts from the activity to the degree that it would have a negligible impact on the species or stocks in the proposed action area. Based on the analysis contained herein of the likely effects of the specified activity on marine mammals and their habitat, and taking into consideration the implementation of the proposed monitoring and mitigation measures, NMFS preliminarily finds that the total marine mammal take from ExxonMobil's proposed conductor pipe installation activities would have a negligible impact on the affected marine mammal species or stocks.

Small Numbers

The estimate of the number of individual cetaceans and pinnipeds that could be exposed to pile-driving sounds with received levels greater than or equal to 160 dB re 1 μPa (rms) for all marine mammals for in-water sound levels and at or above 90 dB re 20 μPa for harbor seals and at or above 100 dB re 20 μPa for all other pinniped species for in-air sound levels during the proposed conductor pipe installation activities is in Table 5 of this document.

In total, 10 gray, 1 humpback, 1 minke, 1 sei, 1 fin, 1 blue, and 1 sperm whale could be taken by Level B harassment during the proposed seismic survey, which would represent 0.05, 0.05, 0.2, 0.8, 0.03, 0.06, and 0.1% of the stock populations, respectively. Some of the cetaceans potentially taken by Level B harassment are delphinids and porpoises with estimates of 1 pygmy sperm, 1 Baird's beaked, 1 Cuvier's beaked 1 *Mesoplodon* spp. Beaked, 1 killer, and 1 short-finned pilot whale, 10 bottlenose, 20 striped, 45 short-beaked common, 120 long-beaked common, 20 Pacific white-sided, 1 northern right whale, and 10 Risso's dolphin as well as 50 Dall's porpoise, which would represent 0.17, 0.12, 0.01, 0.14, 0.42/0.29/0.28, 0.13, 0.1, 0.18, 0.01, 0.11, 0.11, 0.01, 0.16, and 0.12% of the affected stock populations, respectively. The pinnipeds that could potentially be taken by Level B harassment are the California sea lion, Pacific harbor and northern elephant seal, and northern fur seal with estimates of 33, 4, 14, and 2 individuals, which would represent 0.01, 0.01, 0.01, and 0.02% of the affected stock populations, respectively.

NMFS has preliminary determined that the requested take estimates represent small numbers relative to the affected species or stocks sizes (i.e., all are less than 1%). Based on the analysis contained herein of the likely effects of the specified activity on marine mammals and their habitat, and taking into consideration the implementation of the mitigation and monitoring measures, NMFS preliminarily finds that small numbers of marine mammals would be taken relative to the populations of the affected species or stocks. See Table 5 for the requested authorized take numbers of marine mammals.

Endangered Species Act

Of the species of marine mammals that may occur in the proposed action area, several are listed as threatened or endangered under the ESA, including the North Pacific right, humpback, sei, fin, blue, and sperm whale and

Guadalupe fur seal. ExxonMobil did not request take of endangered North Pacific right whales or the Guadalupe fur seals due to the low likelihood of encountering this species during the proposed pile-driving activities. NMFS's Office of Protected Resources, Permits and Conservation Division, has initiated formal consultation under section 7 of the ESA with NMFS's West Coast Regional Office, Protected Resources Division, to obtain a Biological Opinion evaluating the effects of issuing the IHA to ExxonMobil under section 101(a)(5)(D) of the MMPA on threatened and endangered marine mammals and, if appropriate, authorizing incidental take. NMFS would conclude formal section 7 consultation prior to making a determination on whether or not to issue the IHA. If the IHA is issued, ExxonMobil, in addition to the mitigation and monitoring requirements included in the IHA, would be required to comply with the Terms and Conditions of the Incidental Take Statement corresponding to NMFS's Biological Opinion issued to both ExxonMobil and NMFS's Office of Protected Resources.

National Environmental Policy Act

To meet National Environmental Policy Act (NEPA; 42 U.S.C. 4321 *et seq.*) requirements, NMFS will conduct a NEPA analysis to evaluate the effects of authorizing the proposed take of marine mammals prior to making a final determination on the issuance of the IHA. This notice, and referenced documents, including the IHA application provide the environmental issues and information relevant to the proposed conductor pipe installation activities as well as those specific to NMFS's issuance of the IHA. NMFS's NEPA analysis will be completed prior to the issuance or denial of this proposed IHA.

Proposed Authorization

As a result of these preliminary determinations, NMFS propose to issue an IHA to ExxonMobil for conducting the pipe installation activities at the Harmony Platform in the Santa Barbara Channel offshore of California, provided the previously mentioned mitigation, monitoring, and reporting requirements are incorporated. The proposed IHA language is provided below:

ExxonMobil Production Company, P.O. Box 4358, Houston, Texas 77210–4358, is hereby authorized under section 101(a)(5)(D) of the Marine Mammal Protection Act (MMPA) (16 U.S.C. 1371(a)(5)(D)), to harass small numbers of marine mammals incidental to conducting conductor pipe installation activities at the Harmony Platform in the Santa Barbara Channel off the coast of California:

1. This Authorization is valid from August 15, 2014 through August 14, 2015.

2. This Authorization is valid only for ExxonMobil's activities associated with conductor pipe installation activities that shall occur in the following specified geographic area:

In the Santa Barbara Channel offshore of California, the Harmony Platform is located at 34°22′35.906″ North, 120°10′04.486″ West. The water depth at the action area is 366 m on the continental slope below a relatively steep descent, and 4.7 km from the shelf break. The conductor pipe installation activities would be conducted 10 km off the California coast, between Point Conception and the city of Santa Barbara, in the U.S. Exclusive Economic Zone, as specified in ExxonMobil's Incidental Harassment Authorization application and addendum.

3. Species Authorized and Level of Takes

(a) The incidental taking of marine mammals, by Level B harassment only, is limited to the following species in the waters of the Pacific Ocean off the coast of California:

(i) *Mysticetes*—see Table 5 (above) for authorized species and take numbers.

(ii) *Odontocetes*—see Table 5 (above) for authorized species and take numbers.

(iii) *Pinnipeds*—see Table 5 (above) for authorized species and take numbers.

(iv) If any marine mammal species is encountered during pile-driving activities that is not listed in Table 2 (attached) for authorized taking and is likely to be exposed to sound pressure levels (SPLs) greater than or equal to 160 dB re 1 μPa (rms) for impulse underwater noise from impact hammer pile-driving and/or at or above 100 dB re 20 μPa (rms) for all pinnipeds species except harbor seals (which is at or above 90 dB re 20 μPa (rms) for in-air noise, then ExxonMobil must shut-down the operations to avoid take.

(b) The taking by injury (Level A harassment), serious injury, or death of any of the species listed in Condition 3(a) above and the taking of any kind of any other species of marine mammal is prohibited and may result in the modification, suspension or revocation of this IHA.

4. The methods authorized for taking by Level B harassment are limited to the following acoustic sources without an amendment to this IHA:

(a) Pile-driving using impact hammer (i.e., installation);

5. The taking of any marine mammal in a manner prohibited under this Authorization must be reported immediately to the Office of Protected Resources, National Marine Fisheries Service (NMFS), at 301–427–8401.

6. Mitigation and Monitoring Requirements

ExxonMobil is required to implement the following mitigation and monitoring requirements when conducting the specified activities to achieve the least practicable impact on affected marine mammal species or stocks:

(a) Establish a 160 dB re 1 μPa (rms) buffer zone for cetaceans and pinnipeds and a 180 dB re 1 μPa (rms) exclusion zone for cetaceans and a 190 dB re 1 μPa (rms) exclusion zone for pinnipeds for in-water sounds before the conductor pipe installation activities begin so that underwater sounds associated with operations no longer exceed levels that are potentially harmful to marine mammals. See Table 2 (above) for distances and buffer and exclusion zones.

(b) Utilize three, NMFS-qualified, vessel-based Protected Species Observer (PSO) to visually watch for and monitor marine mammals near the impact hammer source during daytime and nighttime pile-driving activities. The Harmony Platform's crew shall also assist in detecting marine mammals, when practicable. PSOs shall be stationed at the best practicable vantage point(s) (on the lower platform level, and upper platform level) of the Harmony Platform to monitor the applicable buffer and exclusion zone for marine mammals during the conductor pipe installation activities. For the buffer zone, two PSOs shall be stationed on the upper platform level. For the exclusion zone, one PSO shall be concurrently stationed on the lower platform level. The lower platform level shall be illuminated during nighttime visual observations. PSOs shall have access to reticle binoculars (7 x 50 Fujinon) and night-vision devices. PSO shifts shall last no longer than 5 hours at a time. PSOs shall also make observations during daytime periods when the pile-driving activities are not occurring for comparison of animal abundance and behavior, when feasible. In addition to monitoring during pile-driving activities, baseline monitoring for marine mammals shall be performed up to one week before and one week after conductor pipe installation activities, as well as selected periods in between impact hammer pile-driving activities.

(c) A PSO shall record the following information when a marine mammal is sighted:

(i) Species, group size, age/size/sex categories (if determinable), behavior when first sighted and after initial sighting, heading (if consistent), bearing and distance from platform, sighting cue, apparent reaction to the conductor pipe installation activities (e.g., none, avoidance, approach, paralleling, etc., and including responses to ramp-up), speed of travel, and duration of presence; and

(ii) Date, time, location, activity of the conductor pipe installation activities (including whether in state of ramp-up or shut-down), monitoring and mitigation measures implemented (or not implemented), weather conditions, Beaufort sea state and wind force, visibility, and sun glare; and

(iii) The data listed under Condition 6(c)(ii) shall also be recorded at the start and end of each observation watch, and during a watch whenever there is a change in one or more of the variables.

(iv.) If inclement weather conditions (i.e., fog, rain, or rough Beaufort sea state) limits or impairs the PSO's visibility of the water's surface to less than 30.5 m (100 ft) within the action area, then all noise-generating conductor pipe installation activities shall be stopped until visibility improves.

(d) Visually observe the entire extent of the in-water buffer zone (160 dB re 1 μPa [rms]) for cetaceans and pinnipeds and in-water exclusion zone (180 dB re 1 μPa [rms] for cetaceans and 190 dB re 1 μPa [rms] for pinnipeds as well as the in-air buffer zone for harbor seals (90 dB re 20 μPa) and for all other pinnipeds (100 dB re 20 μPa); see Table 2 [above] for distances) using NMFS-qualified PSOs, for at least 30 minutes prior to starting the impact hammer (day or night). If the PSO finds a marine mammal within the exclusion zone, ExxonMobil must delay the pile-driving activities until the marine mammal(s) has left the area. If the PSO sees a marine mammal that surfaces, then dives below the surface, the PSO shall wait 30 minutes. If the PSO sees no marine mammals during that time, they should assume that the animal has moved beyond the exclusion zone. If for any reason the entire exclusion zone radius cannot be seen for the entire 30 minutes (i.e., rough seas, fog, darkness), or if marine mammals are near, approaching, or in the exclusion zone, the impact hammer may not be ramped-up.

(e) Implement a ''ramp-up'' procedure when starting up at the beginning of pile-driving activities, which means starting with an initial set of three strikes from the impact hammer at 40% energy, followed by a 30 second waiting period, then two subsequent three strike sets. During ramp-up, the PSOs shall monitor the exclusion zone, and if marine mammals are sighted, a shut-down shall be implemented. Therefore, initiation of ramp-up procedures from shut-down requires that the PSOs be able to view the full exclusion zone as described in Condition 6(a) (above).

(f) Shut-down the pile-driving activities if a marine mammal is detected approaching, about to enter, or located within the relevant exclusion zone (as defined in Table 2, above). A shut-down means all operating impact hammers are shut-down (i.e., turned off). If any marine mammal is sighted within the relevant exclusion zone prior to pile-driving activities, the hammer operator (or other authorized individual) shall delay conductor pipe installation activities until the animal has moved outside the exclusion zone or the animal is not resighted within for 15 minutes for species with shorter dive durations (small odontocetes and pinnipeds) or 30 minutes for species with longer dive durations (mysticetes and large odontocetes, including sperm, pygmy and dwarf sperm, killer, and beaked whales).

(g) Following a shut-down, the conductor pipe installation activities shall not resume until the PSO has visually observed the marine mammal(s) exiting the exclusion zone and is not likely to return, or has not been seen within the exclusion zone for 15 minutes for species with shorter dive durations (small odontocetes and pinnipeds) or 30 minutes for species with longer dive durations (mysticetes and large odontocetes, including sperm, pygmy and dwarf sperm, killer, and beaked whales).

(h) Following a shut-down and subsequent animal departure, conductor pipe installation activities may resume following ramp-up procedures described in Condition 6(e).

(i) To facilitate visual monitoring during non-daylight hours, the exclusion zones shall be illuminated by lights to allow for more effective viewing of the area by the PSO on-duty.

(j) *In-Water Monitoring*—Acoustic monitoring shall be performed at a minimum of two fixed stations located at 10 m and approximately 325 m from the conductor pipe sound source. The following general approach shall be used to measure in-water sound levels:

(k) Acoustic monitoring shall be conducted over the entire pile-driving period for each conductor pipe, starting approximately 1 hour prior to pile-driving through 1 hour after impact hammering has stopped. Pre- and post-hammer pile-driving data shall be used to determine ambient/background noise levels.

(i) A stationary hydrophone system with the ability to measure and record sound pressure levels (SPL) shall be deployed at a minimum of two monitoring locations. SPLs shall be recorded in voltage, converted to microPascals (μPa), and post-processed to decibels (dB [re 1 μPa]). For the first conductor pipe installation, hydrophones shall be placed at 10±1 m and at 325±33 m from the conductor pipe at depths ranging from 10 to 30 m below the water surface to avoid potential interferences for surface water energy, and to target the depth range of maximum occurrence of marine mammal most likely in the area during the project. If necessary, additional hydrophone mooring systems shall be deployed at additional distances and/or depths. Following each successive conductor pipe installation, the water depth and geographical orientation of the hydrophone may be changed to validate modeled SPLs at varying water depths and direction.

(ii) At a minimum, the following sound data shall be analyzed (post-processed) from recorded sound levels: Absolute peak overpressure and under pressure levels for each conductor pipe; average, minimum, and maximum sound pressure levels (rms), integrated from 3 Hz to 20 kHz; average duration of each hammer strike, and total number of strikes per continuous hammer pile-driving period for each conductor pipe.

(iii) In the event that field measurements indicate different SPL (rms) values than those predicted by modeling for either the maximum distances of the buffer or exclusion zones from the sound source, corresponding boundaries for the buffer and exclusion zones shall be increased/decreased accordingly, following NMFS notification and concurrence.

(l) In-Air Monitoring—Reference measurements shall be made approximately 10 to 20 m from the initial hammer strike position using a stationary microphone. The microphone shall be placed as far away from other large sound sources as practical. In-air sound levels shall be recorded at several points around the base of the Harmony Platform at sea level to validate modeled sound levels. Recorded data shall be recorded as dB (re 20 μPa) for comparison to in-air noise thresholds for Level B harassment for pinnipeds.

7. Reporting Requirements

ExxonMobil is required to:

(a) Submit a draft report on all activities and monitoring results to the Office of Protected Resources, NMFS, within 90 days of the completion of ExxonMobil's conductor pipe installation activities at the Harmony Platform in the Santa Barbara Channel off the coast of California. This report must contain and summarize the following information:

(i) Dates, times, locations, weather, sea conditions (including Beaufort sea state and wind force), and associated activities during all conductor pipe installation activities and marine mammal sightings;

(ii) Species, number, location, distance from the platform, and behavior of any marine mammals, as well as associated conductor pipe installation activities (e.g., number of ramp-ups and shut-downs), observed throughout all monitoring activities.

(iii) An estimate of the number (by species) of marine mammals that: (A) Are known to have been exposed to the pile-driving activities (based on visual observation) at received levels greater than or equal to 160 dB re 1 μPa (rms), and/or 180 dB re 1 μPa (rms) for cetaceans and greater than or equal to 190 dB re 1 μPa (rms) for pinnipeds with a discussion of any specific behaviors those individuals exhibited; and (B) may have been exposed (based on modeled values for the impact hammer) to the pile-driving activities at received levels greater than or equal to 160 dB re 1 μPa (rms), and/or 180 dB re 1 μPa (rms) for cetaceans and greater than or equal to 190 dB re 1 μPa (rms) for pinnipeds with a discussion of the nature of the probable consequences of that exposure on the individuals that have been exposed.

(iv) A description of the implementation and effectiveness of the: (A) Terms and Conditions of the Biological Opinion's Incidental Take Statement (ITS) (attached); and (B) mitigation measures of the Incidental Harassment Authorization. For the Biological Opinion, the report shall confirm the implementation of each Term and Condition, as well as any conservation recommendations, and describe their effectiveness for minimizing the adverse effects of the action on Endangered Species Act-listed marine mammals.

(l) Submit a final report to the Chief, Permits and Conservation Division, Office of Protected Resources, NMFS, within 30 days after receiving comments from NMFS on the draft report. If NMFS decides that the draft report needs no comments, the draft report shall be considered to be the final report.

8. Reporting Prohibited Take

In the unanticipated event that the specified activity clearly causes the take of a marine mammal in a manner prohibited by this Authorization, such as an injury (Level A harassment), serious injury or mortality (e.g., equipment interaction, and/or entanglement), ExxonMobil shall immediately cease the specified activities and immediately report the incident to the Chief of the Permits and Conservation Division, Office of Protected Resources, NMFS, at 301–427–8401 and/or by email to *Jolie.Harrison@noaa.gov* and *Howard.Goldstein@noaa.gov* and the West Coast Regional Stranding Coordinator (*Justin.Greenman@noaa.gov*). The report must include the following information:

(a) Time, date, and location (latitude/longitude) of the incident; description of the circumstances during and leading up to the incident; status of all sound source use in the 24 hours preceding the incident; water depth; environmental conditions (e.g., wind speed and direction, Beaufort sea state, cloud cover, and visibility); description of marine mammal observations in the 24 hours preceding the incident; species identification or description of the animal(s) involved; the fate of the animal(s); and photographs or video footage of the animal (if equipment is available).

Activities shall not resume until NMFS is able to review the circumstances of the prohibited take. NMFS shall work with ExxonMobil to determine what is necessary to minimize the likelihood of further prohibited take and ensure MMPA compliance. ExxonMobil may not resume their activities until notified by NMFS via letter, email, or telephone.

Reporting an Injured or Dead Marine Mammal with an Unknown Cause of Death—In the event that ExxonMobil discovers an injured or dead marine mammal, and the lead PSO determines that the cause of the injury or death is unknown and the death is relatively recent (i.e., in less than a moderate state of decomposition as described in the next paragraph), ExxonMobil shall immediately report the incident to the Chief of the Permits and Conservation Division, Office of Protected Resources, NMFS, at 301–427–8401, and/or by email to *Jolie.Harrison@noaa.gov* and *Howard.Goldstein@noaa.gov*, and the NMFS West Coast Regional Office (1–866–767–6114) and/or by email to the West Coast Regional Stranding Coordinator (*Justin.Greenman@noaa.gov*). The report must include the same information identified in Condition 8(a) above. Activities may continue while NMFS reviews the circumstances of the incident. NMFS shall work with ExxonMobil to determine whether modifications in the activities are appropriate.

Reporting an Injured or Dead Marine mammal Not Related to the Activities—In the event that ExxonMobil discovers an injured or dead marine mammal, and the lead PSO determines that the injury or death is not associated with or related to the activities authorized in Condition 2 of this Authorization (e.g., previously wounded animal, carcass with moderate to advanced decomposition, or scavenger damage), ExxonMobil shall report the incident to the Chief of the Permits and Conservation Division, Office of Protected Resources, NMFS, at 301–427–8401, and/or by email to *Jolie.Harrison@noaa.gov* and *Howard.Goldstein@noaa.gov*, and the NMFS West Coast Regional Office (1–866–767–6114) and/or by email to the West Coast Regional Stranding Coordinator (*Justin.Greenman@noaa.gov*), within 24 hours of the discovery. ExxonMobil shall provide photographs or video footage (if available) or other documentation of the stranded animal sighting to NMFS and the Marine Mammal Stranding Network. Activities may continue while NMFS reviews the circumstances of the incident.

9. Endangered Species Act Biological Opinion and Incidental Take Statement ExxonMobil is required to comply with the Terms and Conditions of the ITS corresponding to NMFS's Biological Opinion issued to both ExxonMobil and NMFS's Office of Protected Resources (attached).

10. A copy of this Authorization and the ITS must be in the possession of all contractors and PSO(s) operating under the authority of this Incidental Harassment Authorization.

11. Penalties and Permit Sanctions—Any person who violates any provision of this IHA is subject to civil and criminal penalties, permit sanctions, and forfeiture as authorized under the MMPA.

12. This IHA may be modified, suspended or withdrawn if ExxonMobil fails to abide by the conditions prescribed herein or if the authorized taking is having more than a negligible impact on the species or stock of affected marine mammals, or if there is an unmitigable adverse impact on the availability of such species or stocks for subsistence uses.

Request for Public Comments

NMFS requests comments on our analysis, the draft authorization, and

any other aspect of the notice of proposed IHA for ExxonMobil's proposed installation of conductor pipes via hydraulic hammer driving at Harmony Platform, Santa Ynez Production Unit, located in the Santa Barbara Channel offshore of California. Please include with your comments any supporting data or literature citations to help inform our final decision on ExxonMobil's request for an MMPA authorization.

Concurrent with the publication of this notice in the **Federal Register**, NMFS is forwarding copies of this application to the Marine Mammal Commission and its Committee of Scientific Advisors.

Dated: June 25, 2014.

Perry F. Gayaldo,

Deputy Director, Office of Protected Resources, National Marine Fisheries Service.

[FR Doc. 2014–15224 Filed 6–27–14; 8:45 am]

BILLING CODE 3510–22–P

DEPARTMENT OF COMMERCE

National Oceanic and Atmospheric Administration

RIN 0648–XD229

Takes of Marine Mammals Incidental to Specified Activities; Taking Marine Mammals Incidental to a Geohazard Survey in the Beaufort Sea, Alaska

AGENCY: National Marine Fisheries Service (NMFS), National Oceanic and Atmospheric Administration (NOAA), Commerce.

ACTION: Notice; issuance of an incidental harassment authorization.

SUMMARY: In accordance with the Marine Mammal Protection Act (MMPA) regulations, notice is hereby given that NMFS has issued an Incidental Harassment Authorization (IHA) to BP Exploration (Alaska) Inc. (BP) to take marine mammals, by harassment, incidental to conducting a shallow geohazard survey in Foggy Island Bay, Beaufort Sea, Alaska, during the 2014 open water season.

DATES: Effective July 1, 2014, through September 30, 2014.

ADDRESSES: Electronic copies of the IHA, application, and associated Environmental Assessment (EA) and Finding of No Significant Impact (FONSI) may be obtained by writing to Jolie Harrison, Supervisor, Incidental Take Program, Permits and Conservation Division, Office of Protected Resources, National Marine Fisheries Service, 1315 East-West Highway, Silver Spring, MD 20910, telephoning the contact listed below (see **FOR FURTHER INFORMATION CONTACT**), or visiting the Internet at: *http://www.nmfs.noaa.gov/pr/permits/incidental.htm.* Documents cited in this notice may also be viewed, by appointment, during regular business hours, at the aforementioned address.

FOR FURTHER INFORMATION CONTACT: Candace Nachman, Office of Protected Resources, NMFS, (301) 427–8401.

SUPPLEMENTARY INFORMATION:

Background

Sections 101(a)(5)(A) and (D) of the MMPA (16 U.S.C. 1361 *et seq.*) direct the Secretary of Commerce to allow, upon request, the incidental, but not intentional, taking of small numbers of marine mammals by U.S. citizens who engage in a specified activity (other than commercial fishing) within a specified geographical region if certain findings are made and either regulations are issued or, if the taking is limited to harassment, a notice of a proposed authorization is provided to the public for review.

Authorization for incidental takings shall be granted if NMFS finds that the taking will have a negligible impact on the species or stock(s), will not have an unmitigable adverse impact on the availability of the species or stock(s) for subsistence uses (where relevant), and if the permissible methods of taking, other means of effecting the least practicable impact on the species or stock and its habitat, and requirements pertaining to the mitigation, monitoring and reporting of such takings are set forth. NMFS has defined ''negligible impact'' in 50 CFR 216.103 as ''. . . an impact resulting from the specified activity that cannot be reasonably expected to, and is not reasonably likely to, adversely affect the species or stock through effects on annual rates of recruitment or survival.''

Except with respect to certain activities not pertinent here, the MMPA defines ''harassment'' as: ''any act of pursuit, torment, or annoyance which (i) has the potential to injure a marine mammal or marine mammal stock in the wild [Level A harassment]; or (ii) has the potential to disturb a marine mammal or marine mammal stock in the wild by causing disruption of behavioral patterns, including, but not limited to, migration, breathing, nursing, breeding, feeding, or sheltering [Level B harassment].''

Summary of Request

On February 4, 2014, NMFS received an application from BP for the taking of marine mammals incidental to conducting a shallow geohazard survey. NMFS determined that the application was adequate and complete on March 6, 2014.

BP proposes to conduct a shallow geohazard survey in Federal and state waters of Foggy Island Bay in the Beaufort Sea during the open-water season of 2014. The activity would occur between July 1 and September 30; however, airgun and other sound source equipment operations would cease on August 25. The following specific aspects of the activity are likely to result in the take of marine mammals: Airguns and scientific sonars/devices. Take, by Level B harassment only, of 9 marine mammal species is anticipated to result from the specified activity.

Description of the Specified Activity

Overview

BP's proposed shallow geohazard survey would consist of two phases: A site survey and a sonar survey. During the first phase, the Site Survey, the emphasis is on obtaining shallow geohazard data using an airgun array and a towed streamer. During the second phase, the Sonar Survey, data will be acquired both in the Site Survey location and subsea pipeline corridor area (see Figure 1 in BP's application) using the multibeam echosounder, sidescan sonar, subbottom profiler, and the magnetometer. The total discharge volume of the airgun array will not exceed 30 cubic inches (in^3).

The purpose of the proposed shallow geohazard survey is to evaluate development of the Liberty field. The Liberty reservoir is located in federal waters in Foggy Island Bay about 8 miles (mi) east of the Endicott Satellite Drilling Island. The project's preferred alternative is to build a gravel island situated over the reservoir. In support of the preferred alternative, a Site Survey is planned with an emphasis on obtaining two-dimensional high-resolution shallow geohazard data using an airgun array and a towed streamer. Additional infrastructure required for the preferred alternative would include a subsea pipeline. A Sonar Survey, using multibeam echosounder, sidescan sonar, subbottom profiler, and magnetometer is proposed over the Site Survey location and subsea pipeline corridor area. The purpose of this proposed survey is to evaluate the existence and location of archaeological resources and potential geologic hazards on the seafloor and in the shallow subsurface.

Dates and Duration

The planned start date is approximately July 1, 2014, with data

acquisition beginning when open water conditions allow. The survey is expected to take approximately 20 days to complete, not including weather downtime. Each phase of the survey (i.e., site survey and sonar survey) has an expected duration of 7.5 days based on a 24-hour workday. Between the first and second phase, the operations will be focused on changing equipment for about 5 days (i.e., no active sound sources would be used to acquire data during this time). To limit potential impacts to the bowhead whale fall migration and subsistence hunting, airgun and sonar operations will conclude by midnight on August 25. Demobilization of equipment would continue after airgun and sonar operations end but would be completed by September 30. Therefore, the dates for the IHA are July 1 through September 30, 2014.

Specified Geographic Region

The proposed shallow geohazards survey would occur in Federal and state waters of Foggy Island Bay in the Beaufort Sea, Alaska. The project area lies mainly within the Liberty Unit but also includes portions of the Duck Island Unit, as well as non-unit areas. Figure 1 in BP's application outlines the proposed survey acquisition areas, including proposed boundaries for the two phases of the project. The Phase 1 Site Survey, focused on obtaining shallow geohazard data using an airgun array and towed streamer, will occur within approximately 12 mi^2. The Phase 2 Sonar Survey will occur over the Site Survey area and over approximately 5 mi^2 within the 29 mi^2 area identified in Figure 1 of BP's application. Water depth in this area ranges from about 2–24 ft. Activity outside the area delineated in Figure 1 of BP's application may include vessel turning while using airguns, vessel transit, and other vessel movements for project support and logistics. The approximate boundaries of the two survey areas are between 70°14′10″ N. and 70°20′20″ N. and between 147°29′05″ W. and 148°52′30″ W.

Detailed Description of Activities

The activities associated with the proposed shallow geohazard survey include vessel mobilization, navigation and data management, housing and logistics, and data acquisition. The Notice of Proposed IHA (79 FR 21522, April 16, 2014) contains a full detailed description of the shallow geohazard survey, including sound source information. That information has not changed and is therefore not repeated here.

Comments and Responses

A Notice of Proposed IHA was published in the **Federal Register** on April 16, 2014 (79 FR 21522) for public comment. During the 30-day public comment period, NMFS received three comment letters from the following: The Marine Mammal Commission (MMC) and two private citizens. All of the public comments received on the Notice of Proposed IHA are available on the Internet at: *http://www.nmfs.noaa.gov/pr/pdfs/permits/bp_liberty_comments.pdf.* Following is a summary of the comments and NMFS' responses.

Comment 1: One private citizen letter requested denial of the IHA because of the harm to the environment. The other private citizen letter requested denial of the IHA because of the pollution that would be caused by the activity.

Response: As described in detail in the proposed IHA notice and summarized here, the only anticipated impacts from the shallow geohazard survey is short-term changes in behavior of a few marine mammal species. BP has designed the survey to avoid the peak times of year when cetaceans are present in the vicinity. Moreover, seismic surveys will not cause long-term harm to or cause pollution of the marine environment. BP is required to implement mitigation and monitoring measures (described later in this document) to minimize impacts to marine mammals and their habitats.

Comment 2: The MMC states that NMFS has proposed takes associated with the use of the seismic airguns; however, no takes were proposed for the use of the other sound sources, including the multibeam echosounder, sidescan sonar, and sub-bottom profiler. Of particular concern to the MMC is the lack of proposed takes associated with the sub-bottom profiler, a non-impulsive, intermittent sound source. Researchers have observed that various species of marine mammals, including harbor porpoises, respond to sound from sources with characteristics similar to a sub-bottom profiler and at received levels below 160 dB re 1 μPa. The temporal and spectral characteristics of such sources suggest that a precautionary Level B harassment threshold of 120 dB re 1 μPa should be used when establishing harassment zones, estimating takes, and developing mitigation measures. The MMC recommends that NMFS require BP to (1) include take estimates resulting from the use of the sub-bottom profiler based on the 120-dB re 1 μPa threshold and (2) revise its monitoring measures as necessary to include monitoring of sub-bottom profiler activities.

Response: Intermittent sounds can be defined as either impulsive or non-impulsive. Impulsive sounds have been defined as sounds which are typically transient, brief (<1 sec), broadband, and consist of a high peak pressure with rapid rise time and rapid decay (ANSI, 1986; NIOSH, 1998). Sub-bottom profiler signals have durations that are typically very brief (<1 sec), with temporal characteristics that more closely resemble those of impulsive sounds than non-impulsive sounds, which typically have more gradual rise times and longer decays (ANSI, 1995; NIOSH, 1998). With regard to behavioral thresholds, we therefore consider the temporal and spectral characteristics of sub-bottom profiler signals to more closely resemble those of an impulse sound. Additionally, a sub-bottom profiler's ''rapid staccato'' of pulse trains is emitted in a similar fashion as odontocete echolocation click trains. Research indicates that marine mammals, in general, have extremely fine auditory temporal resolution and can detect each signal separately (e.g., Au *et al.,* 1988; Dolphin *et al.,* 1995; Supin and Popov, 1995; Mooney *et al.,* 2009), especially for species with echolocation capabilities. Therefore, marine mammals would likely perceive sub-bottom profiler signals as being impulsive. Consequently, the 160-dB threshold (typically associated with impulsive sources) is more appropriate than the 120-dB threshold (typically associated with continuous sources) for estimating takes by behavioral harassment incidental to use of such sources.

Regardless of which threshold is used to estimate Level B harassment take, based on the 160 dB and 120 dB radii, less than 0.1 beluga whales and less than 0.1 bowhead whales would be exposed at either sound level. Based on this information, any take that may potentially occur from the sub-bottom profiler is already accounted for in the authorized take estimates. Therefore, NMFS has not increased the take estimates. Moreover, NMFS determined that additional monitoring measures are not necessary to include monitoring specifically for sub-bottom profilers. Protected Species Observers (PSOs) will be on-duty during all daylight hours (with no periods of darkness anticipated until mid-August). The distances to the 160- and 120-dB isopleths from the sub-bottom profiler are 30 m and 450 m, respectively. Therefore, additional monitoring measures beyond those already required are not needed to observe this zone.

Comment 3: According to the MMC, an accurate characterization of the size

of the harassment zone is necessary for obtaining reliable estimates of the numbers of animals taken. The MMC disagrees with using the area of a circle to estimate the size of the ensonified area. According to the MMC, this would only be correct if the sound source were stationary. For surveys in which the source is moving (i.e., towed airgun arrays), the ensonified area should instead be based on the total linear distance surveyed by the vessel in a day, taking into account the distance to the Level B harassment threshold, which would presumably produce an area greater than that calculated by using the area of a circle. BP and NMFS should use that revised estimate of the ensonified area to determine the numbers of animals that could be taken. The MMC recommends that NMFS require BP to recalculate take estimates for beluga and bowhead whales and ringed, bearded, and spotted seals incidental to seismic airguns using the revised ensonified area estimate for a moving sound source. The MMC further recommends that NMFS require BP to estimate take incidental to the use of the sub-bottom profiler based on an ensonified area for the sub-bottom profiler for a moving sound source.

Response: In shallow water heterogeneous environments (such as that for the proposed survey), propagation conditions change as the vessel moves; therefore, using the total linear distance surveyed by the vessel in a day would not necessarily result in estimates that are any more accurate than the method of using the area of a circle. In deeper water with more constant oceanographic and bathymetric conditions, a complex polygon based on propagation modeling is likely a better method to employ. However, BP will conduct surveys in extremely shallow water (generally less than about 30 ft). NMFS agrees that the methods used to calculate take provide an accurate representation of the numbers of marine mammals that may potentially occur in the Level B harassment zone. As explained in the response to *Comment 2,* NMFS determined that additional takes do not need to be added as a result of use of the sub-bottom profiler.

Comment 4: The MMC states that BP has proposed that observers would monitor for marine mammals 30 minutes before and during the proposed activities. NMFS agreed with that approach but did not include a requirement for post-activity monitoring. The MMC states, in general, post-activity monitoring is needed to ensure that marine mammals are not taken in unexpected or unauthorized ways or in unanticipated numbers. Some types of taking (e.g., taking by death or serious injury) may not be observed until after the activity has ceased. Post-activity monitoring is the best way, and in some situations may be the only reliable way, to detect certain impacts. Accordingly, the MMC recommends that NMFS require BP to monitor for marine mammals 30 minutes before, during, and 30 minutes after the proposed activities.

Response: NMFS has included a requirement in the IHA that observers monitor for marine mammals 30 minutes before, during, and 30 minutes after the use of the seismic airguns and other active sound sources.

Description of Marine Mammals in the Area of the Specified Activity

The Beaufort Sea supports a diverse assemblage of marine mammals. Table 1 lists the 12 marine mammal species under NMFS jurisdiction with confirmed or possible occurrence in the proposed project area.

Table 1. Marine mammal species with confirmed or possible occurrence in the seismic survey area.

Common Name	Scientific Name	Status	Occurrence	Seasonality	Range	Abundance
Odontocetes						
Beluga whale (Beaufort Sea stock)	Delphinapterus leucas	-	Common	Mostly spring and fall with some in summer	Russia to Canada	39,258
Killer whale	Orcinus orca	-	Occasional/ Extralimital	Mostly summer and early fall	California to Alaska	552
Harbor porpoise	Phocoena phocoena	-	Occasional/ Extralimital	Mostly summer and early fall	California to Alaska	48,215
Narwhal	Monodon monoceros	-				45,358
Mysticetes						
Bowhead whale	Balaena mysticetus	Endangered; Depleted	Common	Mostly spring and fall with some in summer	Russia to Canada	16,892
Gray whale	Eschrichtius robustus	-	Somewhat common	Mostly summer	Mexico to the U.S. Arctic Ocean	19,126
Minke whale	Balaenoptera acutorostrata	-				810-1,003
Humpback whale (Central North Pacific stock)	Megaptera novaeangliae	Endangered; Depleted				21,063
Pinnipeds						
Bearded seal (Beringia distinct population segment)	Erigathus barbatus	Threatened; Depleted	Common	Spring and summer	Bering, Chukchi, and Beaufort Seas	155,000
Ringed seal (Arctic stock)	Phoca hispida	Threatened; Depleted	Common	Year round	Bering, Chukchi, and Beaufort Seas	300,000
Spotted seal	Phoca largha	-	Common	Summer	Japan to U.S. Arctic Ocean	141,479
Ribbon seal	Histriophoca fasciata	Species of concern	Occasional	Summer	Russia to U.S. Arctic Ocean	49,000

Endangered, threatened, or species of concern under the Endangered Species Act (ESA); Depleted under the MMPA

The highlighted (grayed out) species in Table 1 are so rarely sighted in the central Alaskan Beaufort Sea that their presence in the proposed project area, and therefore take, is unlikely. Minke whales are relatively common in the Bering and southern Chukchi seas and have recently also been sighted in the northeastern Chukchi Sea (Aerts *et al.,* 2013; Clarke *et al.,* 2013). Minke whales are rare in the Beaufort Sea. They have not been reported in the Beaufort Sea during the Bowhead Whale Aerial Survey Project/Aerial Surveys of Arctic Marine Mammals (BWASP/ASAMM) surveys (Clarke *et al.,* 2011, 2012; 2013; Monnet and Treacy, 2005), and there was only one observation in 2007 during vessel-based surveys in the region (Funk *et al.,* 2010). Humpback whales have not generally been found in the Arctic Ocean. However, subsistence hunters have spotted humpback whales in low numbers around Barrow, and there have been several confirmed sightings of humpback whales in the northeastern Chukchi Sea in recent years (Aerts *et al.,* 2013; Clarke *et al.,* 2013). The first confirmed sighting of a humpback whale in the Beaufort Sea was recorded in August 2007 (Hashagen *et al.,* 2009) when a cow and calf were observed 54 mi east of Point Barrow. No additional sightings have been documented in the Beaufort Sea. Narwhal are common in the waters of northern Canada, west Greenland, and in the European Arctic, but rarely occur in the Beaufort Sea (COSEWIC, 2004).

Only a handful of sightings have occurred in Alaskan waters (Allen and Angliss, 2013). These three species are not considered further in this IHA notice. Both the walrus and the polar bear could occur in the U.S. Beaufort Sea; however, these species are managed by the U.S. Fish and Wildlife Service (USFWS) and are not considered further in this IHA.

The Beaufort Sea is a main corridor of the bowhead whale migration route. The main migration periods occur in spring from April to June and in fall from late August/early September through October to early November. During the fall migration, several locations in the U.S. Beaufort Sea serve as feeding grounds for bowhead whales. Small numbers of bowhead whales that remain in the U.S. Arctic Ocean during summer also feed in these areas. The U.S. Beaufort Sea is not a main feeding or calving area for any other cetacean species. Ringed seals breed and pup in the Beaufort Sea; however, this does not occur during the summer or early fall. Further information on the biology and local distribution of these species can be found in BP's application (see **ADDRESSES**) and the NMFS Marine Mammal Stock Assessment Reports, which are available online at: *http://www.nmfs.noaa.gov/pr/species/.*

Potential Effects of the Specified Activity on Marine Mammals

This section includes a summary and discussion of the ways that the types of stressors associated with the specified activity (e.g., seismic airgun, sidescan sonar, subbottom profiler, vessel movement) have been observed to or are thought to impact marine mammals. This section may include a discussion of known effects that do not rise to the level of an MMPA take (for example, with acoustics, we may include a discussion of studies that showed animals not reacting at all to sound or exhibiting barely measurable avoidance). The discussion may also include reactions that we consider to rise to the level of a take and those that we do not consider to rise to the level of a take. This section is intended as a background of potential effects and does not consider either the specific manner in which this activity will be carried out or the mitigation that will be implemented or how either of those will shape the anticipated impacts from this specific activity. The ''Estimated Take by Incidental Harassment'' section later in this document will include a quantitative analysis of the number of individuals that are expected to be taken by this activity. The ''Negligible Impact Analysis'' section will include the analysis of how this specific activity will impact marine mammals and will consider the content of this section, the ''Estimated Take by Incidental Harassment'' section, the ''Mitigation'' section, and the ''Anticipated Effects on Marine Mammal Habitat'' section to draw conclusions regarding the likely impacts of this activity on the reproductive success or survivorship of individuals and from that on the affected marine mammal populations or stocks.

Operating active acoustic sources, such as airgun arrays, has the potential for adverse effects on marine mammals. The majority of anticipated impacts would be from the use of acoustic sources.

The effects of sound from airgun pulses might include one or more of the following: Tolerance, masking of natural sounds, behavioral disturbance, and temporary or permanent hearing impairment or non-auditory effects (Richardson *et al.,* 1995). However, for reasons discussed in the proposed IHA, it is unlikely that there would be any cases of temporary, or especially permanent, hearing impairment resulting from BP's activities. As outlined in previous NMFS documents, the effects of noise on marine mammals are highly variable, often depending on species and contextual factors (based on Richardson *et al.,* 1995).

In the ''Potential Effects of the Specified Activity on Marine Mammals'' section of the Notice of Proposed IHA (79 FR 21522, April 16, 2014), NMFS included a qualitative discussion of the different ways that BP's 2014 shallow geohazard survey program may potentially affect marine mammals. The discussion focused on information and data regarding potential acoustic and non-acoustic effects from survey activities (i.e., use of airguns, sonar systems, and aircraft). Marine mammals may experience masking and behavioral disturbance. The information contained in the ''Potential Effects of Specified Activities on Marine Mammals'' section from the proposed IHA has not changed. Please refer to the proposed IHA for the full discussion (79 FR 21522, April 16, 2014). A short summary is provided here.

Marine mammals may behaviorally react when exposed to anthropogenic sound. These behavioral reactions are often shown as: Changing durations of surfacing and dives, number of blows per surfacing, or moving direction and/or speed; reduced/increased vocal activities; changing/cessation of certain behavioral activities (such as socializing or feeding); visible startle response or aggressive behavior (such as tail/fluke slapping or jaw clapping); avoidance of areas where sound sources are located; and/or flight responses (e.g., pinnipeds flushing into water from haulouts or rookeries).

Masking is the obscuring of sounds of interest by other sounds, often at similar frequencies. Marine mammals use acoustic signals for a variety of purposes, which differ among species, but include communication between individuals, navigation, foraging, reproduction, avoiding predators, and learning about their environment (Erbe and Farmer, 2000; Tyack, 2000). Masking, or auditory interference, generally occurs when sounds in the environment are louder than, and of a similar frequency as, auditory signals an animal is trying to receive. Masking is a phenomenon that affects animals that are trying to receive acoustic information about their environment, including sounds from other members of their species, predators, prey, and sounds that allow them to orient in their environment. Masking these acoustic signals can disturb the behavior of individual animals, groups of animals, or entire populations. For the airgun sound generated from the proposed survey, sound will consist of low frequency (under 500 Hz) pulses with extremely short durations (less than one second). There is little concern regarding masking near the sound source due to the brief duration of these pulses and relatively longer silence between airgun shots (approximately 3–4 seconds). Masking from airguns is more likely in low-frequency marine mammals like mysticetes (which are not expected to occur in high numbers in the survey area in July and August). It is less likely for mid- to high-frequency cetaceans and pinnipeds.

Hearing impairment (either temporary or permanent) is unlikely. Given the higher level of sound necessary to cause permanent threshold shift as compared with temporary threshold shift, it is considerably less likely that permanent threshold shift would occur during the survey in Foggy Island Bay. Cetaceans generally avoid the immediate area around operating seismic vessels, as do some other marine mammals. Some pinnipeds show avoidance reactions to airguns, but their avoidance reactions are generally not as strong or consistent as those of cetaceans, and occasionally they seem to be attracted to operating seismic vessels (NMFS, 2010).

Serious injury or mortality is not anticipated from use of the equipment. To date, there is no evidence that serious injury, death, or stranding by marine mammals can occur from exposure to airgun pulses, even in the

case of large airgun arrays. Additionally, BP's project will use an extremely small-sized airgun array in shallow water. NMFS does not expect any marine mammals will incur serious injury or mortality in the shallow waters of Foggy Island Bay or strand as a result of the proposed geohazard survey.

Active acoustic sources other than airguns (i.e., sonar systems) are proposed for BP's 2014 shallow geohazard survey in Foggy Island Bay, Beaufort Sea, Alaska. The multibeam echosounder does not produce frequencies within the hearing range of marine mammals. Exposure to sounds generated by this instrument, therefore, does not present a risk of potential physiological damage, hearing impairment, and/or behavioral responses.

The sidescan sonar does not produce frequencies within the hearing range of mysticetes and ice seals, but when operating at 110–135 kHz could be audible by mid- and high-frequency cetaceans, depending on the strength of the signal. However, when it operates at the much higher frequencies greater than 400 kHz, it is outside of the hearing range of all marine mammals. Masking is unlikely to occur due to the nature of the signal and because beluga whales and ice seals generally vocalize at frequencies lower than 100 kHz. Any behavioral reactions are anticipated to be short-term and temporary in nature. No hearing impairment or death is anticipated from use of this equipment.

Subbottom profilers will be audible to all three hearing classes of marine mammals that occur in the project area. Based on previous measurements of various subbottom profilers, the rms sound pressure level does not reach 180 dB re 1μPa (Funk *et al.,* 2008; Ireland *et al.,* 2009; Warner and McCrodan, 2011). Masking is unlikely due to the low duty cycle, directionality, and brief period when an individual mammal is likely to be within the beam. Additionally, the higher frequencies of the instrument are unlikely to overlap with the lower frequency calls by mysticetes. Some stranding events of mid-frequency cetaceans were attributed to the presence of sonar surveys in the area (e.g., Southall *et al.,* 2006). Recently, an independent scientific review panel concluded that the mass stranding of approximately 100 melon-headed whales in northwest Madagascar in 2008 was primarily triggered by a multibeam echosounder system (Southall *et al.,* 2013), acknowledging that it was difficult to find evidence showing a direct cause-effect relationships. The multibeam echosounder proposed in this survey will operate at much higher frequencies, outside the hearing range of any marine mammal. The sidescan sonar and subbottom profiler are much less powerful. Considering the acoustic specifics of these instruments, the shallow water environment, the unlikely presence of toothed whales in the area, and planned mitigation measures, no marine mammal stranding or mortality are expected.

Vessel activity and noise associated with vessel activity will temporarily increase in the action area during BP's survey as a result of the operation of one vessel. To minimize the effects of the vessel and noise associated with vessel activity, BP will alter speed if a marine mammal gets too close to a vessel. In addition, the vessel will be operating at slow speed (3–4 knots) when conducting surveys. Marine mammal monitoring observers will alert the vessel captain as animals are detected to ensure safe and effective measures are applied to avoid coming into direct contact with marine mammals. Therefore, NMFS neither anticipates nor authorizes takes of marine mammals from ship strikes.

Anticipated Effects on Marine Mammal Habitat

The primary potential impacts to marine mammal habitat and other marine species are associated with elevated sound levels produced by airguns and other active acoustic sources. The proposed IHA contains a full discussion of the potential impacts to marine mammal habitat and prey species in the project area. No changes have been made to that discussion. Please refer to the proposed IHA for the full discussion of potential impacts to marine mammal habitat (79 FR 21522, April 16, 2014). NMFS has determined that BP's shallow geohazard survey program is not expected to have any habitat-related effects that could cause significant or long-term consequences for individual marine mammals or their populations.

Mitigation

In order to issue an incidental take authorization (ITA) under section 101(a)(5)(D) of the MMPA, NMFS must set forth the permissible methods of taking pursuant to such activity, and other means of effecting the least practicable impact on such species or stock and its habitat, paying particular attention to rookeries, mating grounds, and areas of similar significance, and on the availability of such species or stock for taking for certain subsistence uses (where relevant). This section summarizes the required mitigation measures contained in the IHA.

Mitigation Measures in BP's Application

BP described general mitigation measures that apply throughout the survey and specific mitigation measures that apply to airgun operations. The protocols are discussed next and can also be found in Section 11 of BP's application (see **ADDRESSES**).

1. General Mitigation Measures

These general mitigation measures apply at all times to the vessel involved in the Liberty geohazard survey. This vessel would also operate under an additional set of specific mitigation measures during airgun operations (described a bit later in this document).

The general mitigation measures include: (1) Adjusting speed to avoid collisions with whales and during periods of low visibility; (2) checking the waters immediately adjacent to the vessel to ensure that no marine mammals will be injured when the vessel's propellers (or screws) are engaged; (3) avoiding concentrations of groups of whales and not operating vessels in a way that separates members of a group; (4) reducing vessel speeds to less than 10 knots in the presence of feeding whales; (5) reducing speed and steering around groups of whales if circumstances allow (but never cutting off a whale's travel path) and avoiding multiple changes in direction and speed when within 900 ft of whales; (6) maintaining an altitude of at least 1,000 ft when flying helicopters, except in emergency situations or during take-offs and landings; and (7) not hovering or circling with helicopters above or within 0.3 mi of groups of whales.

2. Seismic Airgun Mitigation Measures

BP will establish and monitor Level A harassment exclusion zones for all marine mammal species. These zones will be monitored by PSOs (more detail later). Should marine mammals enter these exclusion zones, the PSOs will call for and implement the suite of mitigation measures described next.

Ramp-up Procedure: Ramp-up procedures of an airgun array involve a step-wise increase in the number of operating airguns until the required discharge volume is achieved. The purpose of a ramp-up (sometimes referred to as ''soft-start'') is to provide marine mammals in the vicinity of the activity the opportunity to leave the area and to avoid the potential for injury or impairment of their hearing abilities.

During ramp-up, BP will implement the common procedure of doubling the number of operating airguns at 5-minute

intervals, starting with the smallest gun in the array. Ramp-up of the 30 in^3 array from a shutdown will therefore take 10 min for the three-airgun array option and 5 min for the two-airgun array option. First the smallest gun in the array will be activated (10 in^3) and after 5 min, the second airgun (10 in^3 or 20 in^3). For the three-airgun array, an additional 5 min are then required to activate the third 10 in^3 airgun. During ramp-up, the exclusion zone for the full airgun array will be observed. The ramp-up procedures will be applied as follows:

1. A ramp-up, following a cold start, can be applied if the exclusion zone has been free of marine mammals for a consecutive 30-minute period. The entire exclusion zone must have been visible during these 30 minutes. If the entire exclusion zone is not visible, then ramp-up from a cold start cannot begin.

2. Ramp-up procedures from a cold start will be delayed if a marine mammal is sighted within the exclusion zone during the 30-minute period prior to the ramp-up. The delay will last until the marine mammal(s) has been observed to leave the exclusion zone or until the animal(s) is not sighted for at least 15 minutes (seals) or 30 minutes (cetaceans).

3. A ramp-up, following a shutdown, can be applied if the marine mammal(s) for which the shutdown occurred has been observed to leave the exclusion zone or until the animal(s) has not been sighted for at least 15 minutes (seals) or 30 minutes (cetaceans). This assumes there was a continuous observation effort prior to the shutdown and the entire exclusion zone is visible.

4. If, for any reason, power to the airgun array has been discontinued for a period of 10 minutes or more, ramp-up procedures need to be implemented. Only if the PSO watch has been suspended, a 30-minute clearance of the exclusion zone is required prior to commencing ramp-up. Discontinuation of airgun activity for less than 10 minutes does not require a ramp-up.

5. The seismic operator and PSOs will maintain records of the times when ramp-ups start and when the airgun arrays reach full power.

Power Down Procedure: A power down is the immediate reduction in the number of operating airguns such that the radii of the 190 dB and 180 dB (rms) zones are decreased to the extent that an observed marine mammal is not in the applicable exclusion zone of the full array. For this geohazard survey, the operation of one airgun continues during a power down. The continued operation of one airgun is intended to (a) alert marine mammals to the presence of airgun activity, and (b) retain the option of initiating a ramp up to full operations under poor visibility conditions.

1. The array will be immediately powered down whenever a marine mammal is sighted approaching close to or within the applicable exclusion zone of the full array, but is outside the applicable exclusion zone of the single airgun;

2. Likewise, if a mammal is already within the exclusion zone of the full array when first detected, the airgun array will be powered down to one operating gun immediately;

3. If a marine mammal is sighted within or about to enter the applicable exclusion zone of the single airgun, it too will be shut down; and

4. Following a power down, ramp-up to the full airgun array will not resume until the marine mammal has cleared the applicable exclusion zone. The animal will be considered to have cleared the exclusion zone if it has been visually observed leaving the exclusion zone of the full array, or has not been seen within the zone for 15 minutes (seals) or 30 minutes (cetaceans).

Shut-down Procedures: The operating airgun(s) will be shut down completely if a marine mammal approaches or enters the 190 or 180 dB (rms) exclusion radius of the smallest airgun.

Airgun activity will not resume until the marine mammal has cleared the applicable exclusion radius of the full array. The animal will be considered to have cleared the exclusion radius as described above under ramp-up procedures.

Poor Visibility Conditions: BP plans to conduct 24-hr operations. PSOs will not be on duty during ongoing seismic operations during darkness, given the very limited effectiveness of visual observation at night (there will be no periods of darkness in the survey area until mid-August). The provisions associated with operations at night or in periods of poor visibility include the following:

- If during foggy conditions, heavy snow or rain, or darkness (which may be encountered starting in late August), the full 180 dB exclusion zone is not visible, the airguns cannot commence a ramp-up procedure from a full shut-down; and
- If one or more airguns have been operational before nightfall or before the onset of poor visibility conditions, they can remain operational throughout the night or poor visibility conditions. In this case ramp-up procedures can be initiated, even though the exclusion zone may not be visible, on the assumption that marine mammals will be alerted by the sounds from the single airgun and have moved away.

BP is aware that available techniques to more effectively detect marine mammals during limited visibility conditions (darkness, fog, snow, and rain) are in need of development and has in recent years supported research and field trials intended to improve methods of detecting marine mammals under these conditions.

Additional Mitigation Measures Required by NMFS

The mitigation airgun will be operated at approximately one shot per minute and will not be operated for longer than three hours in duration during daylight hours and good visibility. In cases when the next start-up after the turn is expected to be during lowlight or low visibility, use of the mitigation airgun may be initiated 30 minutes before darkness or low visibility conditions occur and may be operated until the start of the next seismic acquisition line. The mitigation gun must still be operated at approximately one shot per minute.

NMFS clarified or refined some of the mitigation measures contained in BP's application (and listed earlier in this section). In low visibility conditions, NMFS requires BP to reduce speeds to 9 knots or less. Separately, NMFS has defined a group or concentration of whales as five or more individuals.

Mitigation Conclusions

NMFS has carefully evaluated BP's mitigation measures and considered a range of other measures in the context of ensuring that NMFS prescribes the means of effecting the least practicable impact on the affected marine mammal species and stocks and their habitat. Our evaluation of potential measures included consideration of the following factors in relation to one another:

- The manner in which, and the degree to which, the successful implementation of the measures are expected to minimize adverse impacts to marine mammals;
- The proven or likely efficacy of the specific measure to minimize adverse impacts as planned; and
- The practicability of the measure for applicant implementation.

Based on our evaluation of the applicant's proposed measures, as well as other measures considered by NMFS and those recommended by the public, NMFS has determined that the required mitigation measures provide the means of effecting the least practicable impact on marine mammals species or stocks and their habitat, paying particular attention to rookeries, mating grounds,

and areas of similar significance. Measures to ensure availability of such species or stock for taking for certain subsistence uses are discussed later in this document (see ''Impact on Availability of Affected Species or Stock for Taking for Subsistence Uses'' section).

Monitoring and Reporting

In order to issue an ITA for an activity, section 101(a)(5)(D) of the MMPA states that NMFS must set forth ''requirements pertaining to the monitoring and reporting of such taking''. The MMPA implementing regulations at 50 CFR 216.104(a)(13) indicate that requests for ITAs must include the suggested means of accomplishing the necessary monitoring and reporting that will result in increased knowledge of the species and of the level of taking or impacts on populations of marine mammals that are expected to be present in the proposed action area. BP submitted information regarding marine mammal monitoring to be conducted during seismic operations as part of the IHA application. That information can be found in Sections 11 and 13 of the application.

Monitoring Measures

1. Visual Monitoring

Two observers referred to as PSOs will be present on the vessel. Of these two PSOs, one will be on watch at all times to monitor the 190 and 180 dB exclusion zones for the presence of marine mammals during airgun operations. The main objectives of the vessel-based marine mammal monitoring are as follows: (1) To implement mitigation measures during seismic operations (e.g. course alteration, airgun power down, shut-down and ramp-up); and (2) to record all marine mammal data needed to estimate the number of marine mammals potentially affected, which must be reported to NMFS within 90 days after the survey.

BP intends to work with experienced PSOs. At least one Alaska Native resident, who is knowledgeable about Arctic marine mammals and the subsistence hunt, is expected to be included as one of the team members aboard the vessel. Before the start of the survey, the vessel crew will be briefed on the function of the PSOs, their monitoring protocol, and mitigation measures to be implemented.

At least one observer will monitor for marine mammals at any time during daylight hours (there will be no periods of total darkness until mid-August). PSOs will be on duty in shifts of a maximum of 4 hours at a time, although the exact shift schedule will be established by the lead PSO in consultation with the other PSOs. In response to a public comment, language has been included in the IHA to clarify that the on-duty PSO must monitor for marine mammals 30 minutes before, during, and 30 minutes after the use of the seismic airguns and other active sound sources.

The vessel will offer a suitable platform for marine mammal observations. Observations will be made from locations where PSOs have the best view around the vessel. During daytime, the PSO(s) will scan the area around the vessel systematically with reticle binoculars and with the naked eye. Because the main purpose of the PSO on board the vessel is detecting marine mammals for the implementation of mitigation measures according to specific guidelines, BP prefers (and NMFS agrees) to keep the information to be recorded as concise as possible, allowing the PSO to focus on detecting marine mammals. The following information will be collected by the PSOs:

- Environmental conditions—consisting of sea state (in Beaufort Wind force scale according to NOAA), visibility (in km, with 10 km indicating the horizon on a clear day), and sun glare (position and severity). These will be recorded at the start of each shift, whenever there is an obvious change in one or more of the environmental variables, and whenever the observer changes shifts;
- Project activity—consisting of airgun operations (on or off), number of active guns, line number. This will be recorded at the start of each shift, whenever there is an obvious change in project activity, and whenever the observer changes shifts; and
- Sighting information—consisting of the species (if determinable), group size, position and heading relative to the vessel, behavior, movement, and distance relative to the vessel (initial and closest approach). These will be recorded upon sighting a marine mammal or group of animals.

When marine mammals in the water are detected within or about to enter the designated exclusion zones, the airgun(s) power down or shut-down procedures will be implemented immediately. To assure prompt implementation of power downs and shut-downs, multiple channels of communication between the PSOs and the airgun technicians will be established.

During the power down and shut-down, the PSO(s) will continue to maintain watch to determine when the animal(s) are outside the exclusion radius. Airgun operations can resume with a ramp-up procedure (depending on the extent of the power down) if the observers have visually confirmed that the animal(s) moved outside the exclusion zone, or if the animal(s) were not observed within the exclusion zone for 15 minutes (seals) or for 30 minutes (cetaceans). Direct communication with the airgun operator will be maintained throughout these procedures.

All marine mammal observations and any airgun power down, shut-down, and ramp-up will be recorded in a standardized format. Data will be entered into or transferred to a custom database. The accuracy of the data entry will be verified daily through QA/QC procedures. Recording procedures will allow initial summaries of data to be prepared during and shortly after the field program, and will facilitate transfer of the data to other programs for further processing and archiving.

2. Fish and Airgun Sound Monitoring

BP proposes to conduct research on fish species in relation to airgun operations, including prey species important to ice seals, during the proposed seismic survey. The Liberty shallow geohazard survey, along with another seismic survey BP is conducting this summer in Prudhoe Bay, offers a unique opportunity to assess the impacts of airgun sounds on fish, specifically on changes in fish abundance in fyke nets that have been sampled in the area for more than 30 years. The monitoring study would occur over a 2-month period during the open-water season. During this time, fish are counted and sized every day, unless sampling is prevented by weather, the presence of bears, or other events. Fish mortality is also noted.

The fish-sampling period coincides with the shallow geohazard survey, resulting in a situation where each of the four fyke nets will be exposed to varying daily exposures to airgun sounds. That is, as source vessels move back and forth across the project area, fish caught in nets will be exposed to different sounds levels at different nets each day. To document relationships between fish catch in each fyke net and received sound levels, BP will attempt to instrument each fyke net location with a recording hydrophone. Recording hydrophones, to the extent possible, will have a dynamic range that extends low enough to record near ambient sounds and high enough to capture sound levels during relatively close approaches by the airgun array (i.e., likely levels as high as about 200 dB re

1 uPa). Bandwidth will extend from about 10 Hz to at least 500 Hz. In addition, because some fish (especially salmonids) are likely to be sensitive to particle velocity instead of or in addition to sound pressure level, BP will attempt to instrument each fyke net location with a recording particle velocity meter. Acoustic and environmental data will be used in statistical models to assess relationships between acoustic and fish variables. Additional information on the details of the fish monitoring study can be found in Section 13.1 of BP's application (see **ADDRESSES**).

Monitoring Plan Peer Review

The MMPA requires that monitoring plans be independently peer reviewed ''where the proposed activity may affect the availability of a species or stock for taking for subsistence uses'' (16 U.S.C. 1371(a)(5)(D)(ii)(III)). Regarding this requirement, NMFS' implementing regulations state, ''Upon receipt of a complete monitoring plan, and at its discretion, [NMFS] will either submit the plan to members of a peer review panel for review or within 60 days of receipt of the proposed monitoring plan, schedule a workshop to review the plan'' (50 CFR 216.108(d)).

Because of the extremely short duration of BP's survey, the fact that activities will be completed prior to any fall bowhead whale subsistence hunts, and that seal hunts occur more than 50 mi from the survey activities, NMFS determined that the survey did not meet the trigger for requiring an independent peer review of the monitoring plan.

Reporting Measures

1. 90-Day Technical Report

A report will be submitted to NMFS within 90 days after the end of the shallow geohazard survey. The report will summarize all activities and monitoring results conducted during in-water seismic surveys. The Technical Report will include the following:

- Summary of project start and end dates, airgun activity, number of guns, and the number and circumstances of implementing ramp-up, power down, shutdown, and other mitigation actions;
- Summaries of monitoring effort (e.g., total hours, total distances, and marine mammal distribution through the study period, accounting for sea state and other factors affecting visibility and detectability of marine mammals);
- Analyses of the effects of various factors influencing detectability of marine mammals (e.g., sea state, number of observers, and fog/glare);
- Species composition, occurrence, and distribution of marine mammal sightings, including date, water depth, numbers, age/size/gender categories (if determinable), and group sizes;
- Analyses of the effects of survey operations;
- Sighting rates of marine mammals during periods with and without seismic survey activities (and other variables that could affect detectability), such as: (i) Initial sighting distances versus survey activity state; (ii) closest point of approach versus survey activity state; (iii) observed behaviors and types of movements versus survey activity state; (iv) numbers of sightings/individuals seen versus survey activity state; (v) distribution around the source vessels versus survey activity state; and (vi) estimates of exposures of marine mammals to Level B harassment thresholds based on presence in the 160 dB harassment zone.

2. Fish and Airgun Sound Report

BP will present the results of the fish and airgun sound study to NMFS in a detailed report. BP proposes to also submit that report to a peer reviewed journal for publication and present the results at a scientific conference and in Barrow and Nuiqsut.

3. Notification of Injured or Dead Marine Mammals

In the unanticipated event that the specified activity clearly causes the take of a marine mammal in a manner prohibited by the IHA, such as an injury (Level A harassment), serious injury or mortality (e.g., ship-strike, gear interaction, and/or entanglement), BP would immediately cease the specified activities and immediately report the incident to the Chief of the Permits and Conservation Division, Office of Protected Resources, NMFS, and the Alaska Regional Stranding Coordinators. The report would include the following information:

- Time, date, and location (latitude/longitude) of the incident;
- Name and type of vessel involved;
- Vessel's speed during and leading up to the incident;
- Description of the incident;
- Status of all sound source use in the 24 hours preceding the incident;
- Water depth;
- Environmental conditions (e.g., wind speed and direction, Beaufort sea state, cloud cover, and visibility);
- Description of all marine mammal observations in the 24 hours preceding the incident;
- Species identification or description of the animal(s) involved;
- Fate of the animal(s); and
- Photographs or video footage of the animal(s) (if equipment is available).

Activities would not resume until NMFS is able to review the circumstances of the prohibited take. NMFS would work with BP to determine what is necessary to minimize the likelihood of further prohibited take and ensure MMPA compliance. BP would not be able to resume their activities until notified by NMFS via letter, email, or telephone.

In the event that BP discovers an injured or dead marine mammal, and the lead PSO determines that the cause of the injury or death is unknown and the death is relatively recent (i.e., in less than a moderate state of decomposition as described in the next paragraph), BP would immediately report the incident to the Chief of the Permits and Conservation Division, Office of Protected Resources, NMFS, and the NMFS Alaska Stranding Hotline and/or by email to the Alaska Regional Stranding Coordinators. The report would include the same information identified in the paragraph above. Activities would be able to continue while NMFS reviews the circumstances of the incident. NMFS would work with BP to determine whether modifications in the activities are appropriate.

In the event that BP discovers an injured or dead marine mammal, and the lead PSO determines that the injury or death is not associated with or related to the activities authorized in the IHA (e.g., carcass with moderate to advanced decomposition, or scavenger damage), BP would report the incident to the Chief of the Permits and Conservation Division, Office of Protected Resources, NMFS, and the NMFS Alaska Stranding Hotline and/or by email to the Alaska Regional Stranding Coordinators, within 24 hours of the discovery. BP would provide photographs or video footage (if available) or other documentation of the stranded animal sighting to NMFS and the Marine Mammal Stranding Network. Activities may continue while NMFS reviews the circumstances of the incident.

Estimated Take by Incidental Harassment

Except with respect to certain activities not pertinent here, the MMPA defines ''harassment'' as: Any act of pursuit, torment, or annoyance which (i) has the potential to injure a marine mammal or marine mammal stock in the wild [Level A harassment]; or (ii) has the potential to disturb a marine mammal or marine mammal stock in the wild by causing disruption of behavioral patterns, including, but not limited to, migration, breathing, nursing, breeding,

feeding, or sheltering [Level B harassment]. Only take by Level B behavioral harassment of some species is anticipated as a result of the shallow geohazard survey. Anticipated impacts to marine mammals are associated with noise propagation from the sound sources (e.g., airguns, sidescan sonar, and subbottom profiler) used in the survey. No take is expected to result from vessel strikes because of the slow speed of the vessel (3–4 knots while acquiring data) and because of mitigation measures to reduce collisions with marine mammals. Additionally, no take is expected to result from helicopter operations (if any occur) because of altitude restrictions. No take is expected from the multibeam echosounder and when the sidescan sonar is operated at frequencies above 400 kHz because the frequencies are outside the hearing ranges of marine mammals. Moreover, when the sidescan sonar is operated at frequencies of 110–135 kHz, it is outside the hearing ranges of low-frequency cetaceans and ice seals. Therefore, take has not been estimated from use of these sources for these species.

BP requested take of 11 marine mammal species by Level B harassment. However, for reasons mentioned earlier in this document, we have determined it is highly unlikely that humpback and minke whales would occur in the survey area. Therefore, NMFS has not authorized take of these two species. The species for which take, by Level B harassment only, is authorized include: Bowhead, beluga, gray, and killer whales; harbor porpoise; and ringed, bearded, spotted, and ribbon seals.

The airguns and sub-bottom profiler produce impulsive sounds. The current acoustic thresholds used by NMFS to estimate Level B and Level A harassment are presented in Table 2.

TABLE 2—CURRENT ACOUSTIC EXPOSURE CRITERIA USED BY NMFS

Criterion	Criterion definition	Threshold
Level A Harassment (Injury)	Permanent Threshold Shift (PTS) (Any level above that which is known to cause TTS).	180 dB re 1 microPa-m (cetaceans)/190 dB re 1 microPa-m (pinnipeds) root mean square (rms).
Level B Harassment	Behavioral Disruption (for impulse noises)	160 dB re 1 microPa-m (rms).
Level B Harassment	Behavioral Disruption (for continuous, noise)	120 dB re 1 microPa-m (rms).

Section 6 of BP's application contains a description of the methodology used by BP to estimate takes by harassment, including calculations for the 160 dB (rms) isopleth and marine mammal densities in the areas of operation (see **ADDRESSES**), which was also provided in the proposed IHA notice (79 FR 21522, April 16, 2014). NMFS verified BP's methods, and used the density and sound isopleth measurements in estimating take. However, after initiating ESA section 7 consultation on this action, NMFS noticed that BP used the average distance to the 180 and 190 dB (rms) isopleths rounded to the nearest 100 or 10, respectively, but used the maximum distance to the 160 dB (rms) isopleth rounded to the nearest 100. This resulted in a 160 dB isopleth about 40% greater than the average expected distance of the isopleth. Table 7A in BP's application presented the average 160 dB isopleth as 944 m but calculated take assuming a 160 dB isopleth as 1,602 m. To remain consistent with the estimation of the other isopleths, NMFS has only rounded the average 160 dB isopleth for the 30 in^3 array to 1,000 m. However, for reasons explained below this only changed the estimated take level for bowhead whales. Also, as noted later in this section, NMFS authorized the maximum number of estimated takes for all species, not just for cetaceans as presented by BP in order to ensure that exposure estimates are not underestimated for pinnipeds.

The shallow geohazard survey will take place in two phases and has an estimated duration of approximately 20 days, including 5 days between the two phases where operations will be focused on changing equipment. Data acquisition will conclude by the start of the Cross Island fall bowhead whale hunt.

During phase 1 of the project, 2D high resolution seismic data will be acquired in about 12 mi^2 of the Site Survey area. The duration is estimated at about 7.5 days, based on a continuous 24-hr operation and not including downtime.

During phase 2, data will be acquired in the Site Survey area (11 mi^2) and over approximately 5 mi^2 of the 29 mi^2 Sonar Survey area using the multibeam echosounder, sidescan sonar, subbottom profiler, and magnetometer. The total duration of Phase 2 is also expected to be 7.5 days, based on a continuous 24-hr operation and not including downtime.

Marine Mammal Density Estimates

The Notice of Proposed IHA (79 FR 21522, April 16, 2014) contained a complete description of the derivation of the marine mammal density estimates. That discussion has not changed and is therefore not repeated here.

Level A and Level B Harassment Zone Distances

For the proposed 2014 shallow geohazard survey, BP used existing sound source verification (SSV) measurements to establish distances to received sound pressure levels (SPLs). The Notice of Proposed IHA (79 FR 21522, April 16, 2014) contained a complete description of the derivation of the Level A and Level B harassment zone distances. With the exception of slightly altering the distances of the Level B harassment zone, as described above, nothing in the discussion has changed. Therefore, the entire discussion is not repeated here.

Table 3 in this document presents the radii used to estimate take (160 dB isopleth) and to implement mitigation measures (180 dB and 190 dB isopleths) from the full airgun array and the 5 in^3 mitigation gun. However, take is only estimated using the larger radius of the full airgun array.

TABLE 3—DISTANCES (IN METERS) TO BE USED FOR ESTIMATING TAKE BY LEVEL B HARASSMENT AND FOR MITIGATION PURPOSES DURING THE PROPOSED 2014 FOGGY ISLAND BAY SHALLOW GEOHAZARD SURVEY

Airgun discharge volume (in^3)	190 dB re 1 μPa	180 dB re 1 μPa	160 dB re 1 μPa
30 in^3	70	200	1,000

TABLE 3—DISTANCES (IN METERS) TO BE USED FOR ESTIMATING TAKE BY LEVEL B HARASSMENT AND FOR MITIGATION PURPOSES DURING THE PROPOSED 2014 FOGGY ISLAND BAY SHALLOW GEOHAZARD SURVEY—Continued

Airgun discharge volume (in^3)	190 dB re 1 μPa	180 dB re 1 μPa	160 dB re 1 μPa
5 in^3	20	50	500

Numbers of Marine Mammals Potentially Taken by Harassment

The potential number of marine mammals that might be exposed to the 160 dB re 1 μPa (rms) SPL was calculated differently for cetaceans and pinnipeds, as described in Section 6.3 of BP's application and the Notice of Proposed IHA (79 FR 21522, April 16, 2014). The change to the 160 dB isopleth for the full array only had implications for the take estimate for bowhead whales. Because of the method used to calculate takes for pinnipeds, the isopleth change did not change the pinniped takes described in those earlier documents. Additionally, the change did not alter the proposed take estimates for other cetacean species. Therefore, those discussions are not repeated here.

BP did not calculate take from the subbottom profiler or from the sidescan sonar for toothed whales. Based on the distance to the 160 dB re 1 μPa (rms) isopleths for these sources and the fact that NMFS has authorized the maximum estimated exposure estimate, the extremely minimal number of exposures (less than one animal for each species) that would result from use of these sources is already accounted for in the airgun exposure estimates.

1. Number of Cetaceans Potentially Taken by Harassment

The potential number of bowhead whales that might be exposed to the 160 dB re 1 μPa (rms) SPL was calculated by multiplying:

- The expected bowhead density as provided in Table 5 in BP's application;
- The anticipated area around each source vessel that is ensonified by the 160 dB re 1 μPa (rms) SPL; and
- The estimated number of 24-hr days that the source vessels are operating.

The area expected to be ensonified by the 30 in^3 array was determined based on the average distance to the 160 dB re 1 μPa (rms) SPL rounded to the nearest 100 as determined from the maximum 20–40 in^3 array measurements (Table 7A in BP's application), which is 1 km. Based on a radius of 1 km, the 160 dB ensonified area used in the exposure calculations was 3.14 km^2.

The estimated number of 24-hr days of airgun operations is 7.5 days (180 hours), not including downtime. Downtime is related to weather, equipment maintenance, mitigation implementation, and other circumstances.

Based on this revision to the 160 dB isopleth, the average and maximum number of bowhead whales potentially exposed to sound levels of 160 dB re 1μPa (rms) or more is estimated at 0.04 and 0.13, respectively. Because a fraction of an exposure is impossible, we rounded up the maximum estimate to account for one bowhead whale exposure to the Level B harassment threshold. These estimated exposures do not take into account the required mitigation measures, such as PSOs watching for animals, shutdowns or power downs of the airguns when marine mammals are seen within defined ranges, and ramp-up of airguns.

Estimated Take by Harassment Summary

Table 4 here outlines the density estimates used to estimate Level B takes, the authorized Level B harassment take levels, the abundance of each species in the Beaufort Sea, the percentage of each species or stock estimated to be taken, and current population trends. As explained earlier in this document, NMFS authorized the maximum estimates of exposures. Additionally, density estimates are not available for species that are uncommon in the proposed survey area.

TABLE 4—DENSITY ESTIMATES OR SPECIES SIGHTING RATES, AUTHORIZED LEVEL B HARASSMENT TAKE LEVELS, SPECIES OR STOCK ABUNDANCE, PERCENTAGE OF POPULATION PROPOSED TO BE TAKEN, AND SPECIES TREND STATUS

Species	Density (#/km^2)	Sighting rate (ind/hr)	Authorized Level B take	Abundance	Percentage of population	Trend
Beluga whale	0.0105		75	39,258	0.19	No reliable information.
Killer whale	NA		1	552	0.18	Stable.
Harbor porpoise	NA		1	48,215	>0.01	No reliable information.
Bowhead whale	0.0055		1	16,892	0.01	Increasing.
Gray whale	NA		1	19,126	0.01	Increasing.
Bearded seal		0.107	19	155,000	0.01	No reliable information.
Ringed seal		0.397	71	300,000	0.02	No reliable information.
Spotted seal		0.126	23	141,479	0.02	No reliable information.
Ribbon seal		NA	1	49,000	>0.01	No reliable information.

Analysis and Determinations

Negligible Impact

Negligible impact is ''an impact resulting from the specified activity that cannot be reasonably expected to, and is not reasonably likely to, adversely affect the species or stock through effects on annual rates of recruitment or survival'' (50 CFR 216.103). A negligible impact finding is based on the lack of likely adverse effects on annual rates of recruitment or survival (i.e., population-level effects). An estimate of the number of Level B harassment takes, alone, is not enough information on which to base an impact determination. In addition to considering estimates of the number of marine mammals that might be ''taken'' through behavioral harassment, NMFS must consider other factors, such as the likely nature of any responses (their intensity, duration, etc.), the context of any responses (critical reproductive time or location, migration, etc.), as well as the number and nature of estimated Level A

harassment takes, the number of estimated mortalities, effects on habitat, and the status of the species.

No injuries or mortalities are anticipated to occur as a result of BP's shallow geohazard survey, and none are authorized. Additionally, animals in the area are not expected to incur hearing impairment or non-auditory physiological effects. The number of takes that are anticipated and authorized are expected to be limited to short-term Level B behavioral harassment. While the airguns will be operated continuously for about 7.5 days, the project time frame will occur when cetacean species are typically not found in the project area or are found only in low numbers. While pinnipeds are likely to be found in the project area more frequently, their distribution is dispersed enough that they likely will not be in the Level B harassment zone continuously. As mentioned previously, pinnipeds appear to be more tolerant of anthropogenic sound than mystiectes. The use of sidescan sonar, multibeam echosounder, and subbottom profiler continuously for 7.5 days will not negatively impact marine mammals as the majority of these instruments are operated outside of the hearing frequencies of marine mammals.

The Alaskan Beaufort Sea is part of the main migration route of the Western Arctic stock of bowhead whales. However, the geohazard survey has been planned to occur when the majority of the population is found in the Canadian Beaufort Sea. Operation of airguns and other sound sources will conclude by midnight on August 25 before the main fall migration begins and well before cow/calf pairs begin migrating through the area. Additionally, several locations within the Beaufort Sea serve as feeding grounds for bowhead whales. However, as mentioned earlier in this document, the primary feeding grounds are not found in Foggy Island Bay. The majority of bowhead whales feed in the Alaskan Beaufort Sea during the fall migration period, which will occur after the cessation of the survey.

Belugas that migrate through the U.S. Beaufort Sea typically do so farther offshore (more than 37 mi [60 km]) and in deeper waters (more than 656 ft [200 m]) than where the survey activities would occur. Gray whales are rarely sighted this far east in the U.S. Beaufort Sea. Additionally, there are no known feeding grounds for gray whales in the Foggy Island Bay area. The most northern feeding sites known for this species are located in the Chukchi Sea. The other cetacean species for which take is authorized are uncommon in Foggy Island Bay, and no known feeding or calving grounds occur in Foggy Island Bay for these species. Based on these factors, exposures of cetaceans to anthropogenic sounds are not expected to last for prolonged periods (i.e., several days) since they are not known to remain in the area for extended periods of time in July and August. Also, the shallow water location of the survey makes it unlikely that cetaceans would remain in the area for prolonged periods. Based on all of this information, the survey is not anticipated to affect annual rates of recruitment or survival for cetaceans in the area.

Ringed seals breed and pup in the Alaskan Beaufort Sea; however, the survey will occur outside of the breeding and pupping seasons. The Beaufort Sea does not provide suitable habitat for the other three ice seal species for breeding and pupping. Based on this information, the survey is not anticipated to affect annual rates of recruitment or survival for pinnipeds in the area.

Of the nine marine mammal species for which take is authorized, one is listed as endangered under the ESA—the bowhead whale—and two are listed as threatened—ringed and bearded seals. Schweder *et al.* (2009) estimated the yearly growth rate for bowhead whales to be 3.2% (95% CI = 0.5–4.8%) between 1984 and 2003 using a sight-resight analysis of aerial photographs. There are currently no reliable data on trends of the ringed and bearded seal stocks in Alaska. The ribbon seal is listed as a species of concern under the ESA. Certain stocks or populations of gray, killer, and beluga whales and spotted seals are listed as endangered or are proposed for listing under the ESA; however, none of those stocks or populations occur in the activity area. There is currently no established critical habitat in the project area for any of these nine species.

Based on the analysis contained herein of the likely effects of the specified activity on marine mammals and their habitat, and taking into consideration the implementation of the required monitoring and mitigation measures, NMFS finds that the total marine mammal take from BP's shallow geohazard survey in Foggy Island Bay, Beaufort Sea, Alaska, will have a negligible impact on the affected marine mammal species or stocks.

Small Numbers

The requested takes authorized represent less than 1% of all populations or stocks (see Table 4 in this document). These take estimates represent the percentage of each species or stock that could be taken by Level B behavioral harassment if each animal is taken only once. The numbers of marine mammals taken are small relative to the affected species or stock sizes. In addition, the mitigation and monitoring measures (described previously in this document) required in the IHA are expected to reduce even further any potential disturbance to marine mammals. NMFS finds that small numbers of marine mammals will be taken relative to the populations of the affected species or stocks.

Impact on Availability of Affected Species or Stock for Taking for Subsistence Uses

Relevant Subsistence Uses

The disturbance and potential displacement of marine mammals by sounds from the survey are the principal concerns related to subsistence use of the area. Subsistence remains the basis for Alaska Native culture and community. Marine mammals are legally hunted in Alaskan waters by coastal Alaska Natives. In rural Alaska, subsistence activities are often central to many aspects of human existence, including patterns of family life, artistic expression, and community religious and celebratory activities. Additionally, the animals taken for subsistence provide a significant portion of the food that will last the community throughout the year. The main species that are hunted include bowhead and beluga whales, ringed, spotted, and bearded seals, walruses, and polar bears. (As mentioned previously in this document, both the walrus and the polar bear are under the USFWS' jurisdiction.) The importance of each of these species varies among the communities and is largely based on availability.

Residents of the village of Nuiqsut are the primary subsistence users in the project area. The communities of Barrow and Kaktovik also harvest resources that pass through the area of interest but do not hunt in or near the Foggy Island Bay area. Subsistence hunters from all three communities conduct an annual hunt for autumn-migrating bowhead whales. Barrow also conducts a bowhead hunt in spring. Residents of all three communities hunt seals. Other subsistence activities include fishing, waterfowl and seaduck harvests, and hunting for walrus, beluga whales, polar bears, caribou, and moose.

Nuiqsut is the community closest to the survey area (approximately 73 mi [117.5 km] southwest). Nuiqsut hunters harvest bowhead whales only during the fall whaling season (Long, 1996). In recent years, Nuiqsut whalers have

typically landed three or four whales per year. Nuiqsut whalers concentrate their efforts on areas north and east of Cross Island, generally in water depths greater than 66 ft (20 m; Galginaitis, 2009). Cross Island is the principal base for Nuiqsut whalers while they are hunting bowheads (Long, 1996). Cross Island is located approximately 10 mi (16 km) from the closest boundary of the survey area.

Kaktovik whalers search for whales east, north, and occasionally west of Kaktovik. Kaktovik is located approximately 91 mi (146.5 km) east of Foggy Island Bay. The western most reported harvest location was about 13 mi (21 km) west of Kaktovik, near 70 °10′ N., 144 °11′ W. (Kaleak, 1996). That site is about 80 mi (129 km) east of the proposed survey area.

Barrow whalers search for whales much farther from the Foggy Island Bay area—about 200+ mi (322+ km) to the west. Barrow hunters have expressed concerns about ''downstream'' effects to bowhead whales during the westward fall migration; however, BP will cease airgun operations prior to the start of the fall migration.

Beluga whales are not a prevailing subsistence resource in the communities of Kaktovik and Nuiqsut. Kaktovik hunters may harvest one beluga whale in conjunction with the bowhead hunt; however, it appears that most households obtain beluga through exchanges with other communities. Although Nuiqsut hunters have not hunted belugas for many years while on Cross Island for the fall hunt, this does not mean that they may not return to this practice in the future. Data presented by Braund and Kruse (2009) indicate that only 1% of Barrow's total harvest between 1962 and 1982 was of beluga whales and that it did not account for any of the harvested animals between 1987 and 1989.

Ringed seals are available to subsistence users in the Beaufort Sea year-round, but they are primarily hunted in the winter or spring due to the rich availability of other mammals in the summer. Bearded seals are primarily hunted during July in the Beaufort Sea; however, in 2007, bearded seals were harvested in the months of August and September at the mouth of the Colville River Delta, which is approximately 50+ mi (80+ km) from the proposed survey area. However, this sealing area can reach as far east as Pingok Island, which is approximately 20 mi (32 km) west of the survey area. An annual bearded seal harvest occurs in the vicinity of Thetis Island (which is a considerable distance from Foggy Island Bay) in July through August. Approximately 20 bearded seals are harvested annually through this hunt. Spotted seals are harvested by some of the villages in the summer months. Nuiqsut hunters typically hunt spotted seals in the nearshore waters off the Colville River Delta. The majority of the more established seal hunts that occur in the Beaufort Sea, such as the Colville delta area hunts, are located a significant distance (in some instances 50 mi [80 km] or more) from the project area.

Potential Impacts to Subsistence Uses

NMFS has defined ''unmitigable adverse impact'' in 50 CFR 216.103 as: ''. . . an impact resulting from the specified activity: (1) That is likely to reduce the availability of the species to a level insufficient for a harvest to meet subsistence needs by: (i) Causing the marine mammals to abandon or avoid hunting areas; (ii) Directly displacing subsistence users; or (iii) Placing physical barriers between the marine mammals and the subsistence hunters; and (2) That cannot be sufficiently mitigated by other measures to increase the availability of marine mammals to allow subsistence needs to be met.''

Noise and general activity during BP's shallow geohazard survey have the potential to impact marine mammals hunted by Native Alaskan. In the case of cetaceans, the most common reaction to anthropogenic sounds (as noted previously) is avoidance of the ensonified area. In the case of bowhead whales, this often means that the animals divert from their normal migratory path by several kilometers. Helicopter activity, although not really anticipated, also has the potential to disturb cetaceans and pinnipeds by causing them to vacate the area. Additionally, general vessel presence in the vicinity of traditional hunting areas could negatively impact a hunt. Native knowledge indicates that bowhead whales become increasingly ''skittish'' in the presence of seismic noise. Whales are more wary around the hunters and tend to expose a much smaller portion of their back when surfacing (which makes harvesting more difficult). Additionally, natives report that bowheads exhibit angry behaviors in the presence of seismic, such as tail-slapping, which translate to danger for nearby subsistence harvesters.

Plan of Cooperation or Measures To Minimize Impacts to Subsistence Hunts

Regulations at 50 CFR 216.104(a)(12) require IHA applicants for activities that take place in Arctic waters to provide a Plan of Cooperation or information that identifies what measures have been taken and/or will be taken to minimize adverse effects on the availability of marine mammals for subsistence purposes. BP signed the 2014 Conflict Avoidance Agreement (CAA) with the Alaska Eskimo Whaling Commission (AEWC), which is developed to minimize potential interference with bowhead subsistence hunting. BP also attended and participated in meetings with the AEWC on December 13, 2013, and additional meetings in 2014. The CAA describes measures to minimize any adverse effects on the availability of bowhead whales for subsistence uses.

The North Slope Borough Department of Wildlife Management (NSB–DWM) was consulted, and BP presented the project to the NSB Planning Commission in 2014. BP held meetings in the community of Nuiqsut to present the proposed project, address questions and concerns from community members, and provide them with contact information of project management to which they can direct concerns during the survey. During the NMFS Open-Water Meeting in Anchorage in 2013, BP presented their proposed projects to various stakeholders that were present during this meeting.

BP will continue to engage with the affected subsistence communities regarding its Beaufort Sea activities. As in previous years, BP will meet formally and/or informally with several stakeholder entities: The NSB Planning Department, NSB–DWM, NMFS, AEWC, Inupiat Community of the Arctic Slope, Inupiat History Language and Culture Center, USFWS, Nanuq and Walrus Commissions, and Alaska Department of Fish & Game.

Project information was provided to and input on subsistence obtained from the AEWC and Nanuq Commission at the following meetings:

- AEWC, October 17, 2013; and
- Nanuq Commission, October 17, 2013.

BP will implement several mitigation measures to reduce impacts on the availability of marine mammals for subsistence hunts in the Beaufort Sea. Many of these measures were developed from the 2013 CAA and previous NSB Development Permits. In addition to the measures listed next, BP will conclude all airgun operations by midnight on August 25 to allow time for the Beaufort Sea communities to prepare for their fall bowhead whale hunts prior to the beginning of the fall westward migration through the Beaufort Sea. Some of the measures mentioned next have been mentioned previously in this document:

- PSOs on board vessels are tasked with looking out for whales and other

marine mammals in the vicinity of the vessel to assist the vessel captain in avoiding harm to whales and other marine mammals;

• Vessels and aircraft will avoid areas where species that are sensitive to noise or vessel movements are concentrated;

• Communications and conflict resolution are detailed in the CAA. BP will participate in the Communications Center that is operated annually during the bowhead subsistence hunt;

• Communications with the village of Nuiqsut to discuss community questions or concerns including all subsistence hunting activities. Pre-project meeting(s) with Nuiqsut representatives will be held at agreed times with groups in the community of Nuiqsut. If additional meetings are requested, they will be set up in a similar manner;

• Contact information for BP will be provided to community members and distributed in a manner agreed at the community meeting;

• BP has contracted with a liaison from Nuiqsut who will help coordinate meetings and serve as an additional contact for local residents during planning and operations; and

• Inupiat Communicators will be employed and work on seismic source vessels. They will also serve as PSOs.

Unmitigable Adverse Impact Analysis and Determination

BP has adopted a spatial and temporal strategy for its Foggy Island Bay survey that should minimize impacts to subsistence hunters. First, BP's activities will not commence until after the spring hunts have occurred. Second, BP will conclude all airgun and other active sound source operations by midnight on August 25 prior to the start of the bowhead whale fall westward migration and any fall subsistence hunts by Beaufort Sea communities. Foggy Island Bay is not commonly used for subsistence hunts. Although some seal hunting co-occurs temporally with BP's survey, the locations do not overlap. BP's presence will not place physical barriers between the sealers and the seals. Additionally, BP will work closely with the closest affected communities and support Communications Centers and employ local Inupiat Communicators. Based on the description of the specified activity, the measures described to minimize adverse effects on the availability of marine mammals for subsistence purposes, and the required mitigation and monitoring measures, NMFS has determined that there will not be an unmitigable adverse impact on subsistence uses from BP's activities.

Endangered Species Act (ESA)

Within the project area, the bowhead whale is listed as endangered and the ringed and bearded seals are listed as threatened under the ESA. The NMFS Office of Protected Resources Permits and Conservation Division consulted with the NMFS Alaska Regional Office (AKRO) Protected Resources Division (PRD) on the issuance of an IHA under Section 101(a)(5)(D) of the MMPA because the action of issuing the IHA may affect threatened and endangered species under NMFS' jurisdiction. On June 19, 2014, NMFS AKRO PRD issued a Biological Opinion, which concluded that the issuance of an IHA to BP for the shallow geohazard survey is not likely to jeopardize the continued existence of the endangered bowhead whale, threatened Arctic subspecies of ringed seal, or the threatened Beringia distinct population segment of bearded seal. There is no critical habitat for any of these species in the survey area.

National Environmental Policy Act (NEPA)

NMFS prepared an EA that includes an analysis of potential environmental effects associated with NMFS' issuance of an IHA to BP to take marine mammals incidental to conducting a shallow geohazard survey program in the Beaufort Sea, Alaska. NMFS has finalized the EA and prepared a FONSI for this action. Therefore, preparation of an Environmental Impact Statement is not necessary.

Authorization

As a result of these determinations, NMFS has issued an IHA to BP for conducting a shallow geohazard survey in the Foggy Island Bay area of the Beaufort Sea, Alaska, during the 2014 open-water season, provided the previously mentioned mitigation, monitoring, and reporting requirements are incorporated.

Dated: June 25, 2014.

Perry F. Gayaldo,

Deputy Director, Office of Protected Resources, National Marine Fisheries Service.

[FR Doc. 2014–15239 Filed 6–27–14; 8:45 am]

BILLING CODE 3510–22–P

DEPARTMENT OF COMMERCE

United States Patent and Trademark Office

Admission To Practice and Roster of Registered Patent Attorneys and Agents Admitted To Practice Before the United States Patent and Trademark Office (USPTO)

ACTION: Notice.

SUMMARY: The United States Patent and Trademark Office (USPTO), as part of its continuing effort to reduce paperwork and respondent burden, invites the general public and other Federal agencies to take this opportunity to comment on the continuing information collection, as required by the Paperwork Reduction Act of 1995, Public Law 104–13 (44 U.S.C. 3506(c)(2)(A)).

DATES: Written comments must be submitted on or before August 29, 2014.

ADDRESSES: You may submit comments by any of the following methods:

• *Email: InformationCollection@uspto.gov.* Include ''0651–0012 comment'' in the subject line of the message.

• *Mail:* Susan K. Fawcett, Records Officer, Office of the Chief Information Officer, United States Patent and Trademark Office, P.O. Box 1450, Alexandria, VA 22313–1450.

• *Federal Rulemaking Portal: http://www.regulations.gov.*

FOR FURTHER INFORMATION CONTACT: Requests for additional information should be directed to Dahlia George, Office of Enrollment and Discipline, United States Patent and Trademark Office, Mail Stop OED, P.O. Box 1450, Alexandria, VA 22313–1450; by telephone at 571–272–4097; or by email to *Dahlia.George@uspto.gov.* Additional information about this collection is also available at *http://www.reginfo.gov* under ''Information Collection Review.''

SUPPLEMENTARY INFORMATION:

I. Abstract

This collection of information is required by 35 U.S.C. 2(b)(2)(D), which permits the United States Patent and Trademark Office (USPTO) to establish regulations governing the recognition and conduct of agents, attorneys or other persons representing applicants or other parties before the USPTO. This statute also permits the USPTO to require information from applicants that shows that they are of good moral character and reputation and have the necessary qualifications to assist applicants with the patent process and to represent them before the USPTO.

The USPTO administers the statute through 37 CFR 1.21, 10.14 and 11.5 through 11.12. These rules address the requirements to apply for the examination for registration and to demonstrate eligibility to be a registered attorney or agent before the USPTO, including the fee requirements. The Office of Enrollment and Discipline (OED) collects information to determine the qualifications of individuals entitled to represent applicants before the USPTO in the preparation and prosecution of applications for a patent. The OED also collects information to administer and maintain the roster of attorneys and agents registered to practice before the USPTO. Information concerning registered attorneys and agents is published by the OED in a public roster that can be accessed through the USPTO Web site.

The information in this collection is used by the USPTO to review applications for the examination for registration and to determine whether an applicant may be added to, or an existing practitioner may remain on, the Register of Patent Attorneys and Agents.

II. Method of Collection

By mail to the USPTO when the individual desires to participate in the information collection except for the Change of Address which will be collected electronically.

III. Data

OMB Number: 0651–0012.

Form Number(s): PTO–158, PTO–158A, PTO/275, PTO–107A, PTO–1209, PTO–2126, PTO–2149 and PTO–2150. Two new forms are being introduced into the collection are PTO–158T and PTO–158LS.

Type of Review: Revision of a currently approved collection.

Affected Public: Businesses or other for-profits.

Estimated Number of Respondents: 25,855 responses per year.

Estimated Time Per Response: The USPTO estimates that it will take the public approximately 1 minute (0.01667 hours) to 40 hours, depending upon the respondents needs, to gather, prepare, and submit the various documents in this information collection.

Estimated Total Annual Respondent Burden Hours: 34,530 hours.

Estimated Total Annual Respondent Cost Burden: $2,603,170. The cost to respondents for taking the registration examination is estimated to be at the rate of $39 per hour, for a cost burden of $1,206,660. The USPTO estimates that the remaining items in this collection will be prepared by attorneys in private firms. Using the professional hourly rate of $389 for attorneys in private firms, the USPTO estimates $1,396,510 per year in respondent cost burden associated with the remaining items in this information collection.

Item #	Item	Estimated time for response (minutes)	Estimated annual responses	Rate	Estimated annual burden hours
1	Application for Registration to Practice Before the United States Patent and Trademark Office (includes both the computerized exam and the USPTO-administered exam) PTO–158.	30	4,420	389.00	2,210
1	Application for Registration to Practice Before the United States Patent and Trademark Office (former examiners; examination waived) PTO–158.	30	100	389.00	50
2	Application for Registration to Practice Before the United States Patent and Trademark Office Under 37 CFR 11.6(c) by a Foreign Resident (examination waived) PTO–158A.	30	100	389.00	50
3	Application for Reciprocal Recognition to Practice in Trademark Matters Before the United States Patent and Trademark Office Under 37 CFR 11.14(c) by a Foreign Attorney or Agent (examination waived) PTO–158T.	30	25	389.00	12.5
4	Application for Registration in the USPTO Law School Program for Law Students to Practice Before the United States Patent and Trademark Office Under 37 CFR 11.14(c) (examination waived) (Law School students only) PTO–158LS.	30	60	389.00	30
5	Registration Examination to Become a Registered Practitioner	420	4,420	39.00	30,940
6	Undertaking under 37 CFR 11.10(b) PTO–275	20	520	389.00	173.3333
7	Data Sheet—Register of Patent Attorneys and Agents (individuals passing the registration exam) PTO–107A.	10	1,995	389.00	332.5
7	Data Sheet—Register of Patent Attorneys and Agents (foreign applicants) PTO–107A.	10	100	389.00	16.6667
7	Data Sheet—Register of Patent Attorneys and Agents (former examiners seeking registration) PTO–107A.	10	100	389.00	16.6667
8	Oath or Affirmation. PTO–1209	5	2,195	389.00	182.9166
9	Reinstatement to the Register. PTO–107R	10	30	389.00	5
10	Written request for reconsideration and further review of disapproval notice of application.	90	30	389.00	45
11	Cover pages used for submitting correspondence to OED (for documents submitted with applications, requests for reconsideration, and petitions).	1	7,500	389.00	125
12	Change of address	2	4,200	389.00	140
13	Petition for reinstatement after disciplinary removal under 37 CFR 11.7(h).	2,400	4	389.00	160
14	Practitioner's supporting documentation for a motion to hold in abeyance a disciplinary proceeding because of a current disability or addiction.	2,400	1	389.00	40
Totals			25,800		34,530

Estimated Total Annual Non-hour Respondent Cost Burden: $1,538,386.14. There are no capital start-up or maintenance costs associated with this information collection. There are, however, non-hour costs due to recordkeeping requirements, filing fees, and postage costs.

There are recordkeeping costs as a result of the Oath which includes a notary public requirement. The average fee for having a document notarized is $2. The USPTO estimates that it will receive 2,195 responses to this information collection per year as a result of this notary requirement, for a total cost of $4,390 per year. Also, there is another recordkeeping cost being added into the collection. The General Requirements Bulletin recommends that ''applicants should make and keep a copy of every document submitted to the office in connection with an application for registration.'' The USPTO estimates that it will take an applicant approximately 5 (0.0833 hours) to print and retain a copy of the submissions and that approximately 4,700 responses will be made per year, for a total of 391.6667 hours. Using the professional rate of $389 per hour for attorneys in private firms, the USPTO estimates that the record keeping cost associated with this copy requirement will be $152,358.34 per year, for a total recordkeeping cost of $156,748.34.

There are also filing fees associated with this collection. The application fees for registration to practice before the USPTO vary depending on whether the applicant is a current applicant, a former examiner, or a foreign resident, or seeking reinstatement to the Register to become active upon leaving the USPTO. The fee for administration of the computerized examination to become a registered patent practitioner also varies depending on how the examination is administered. The total annual non-hour cost burden associated with filing fees is $1,377,636.60.

	Item	Responses (yr)	Filing fee ($)	Total non-hour cost burden ($/hr)
		(a)	(b)	(a) (b) × (c)
	ITEMS FOR WHICH FEES CURRENTLY ARE COLLECTED			
1	Non-Refundable Application Fee for Registration to Practice Before the United States Patent and Trademark Office (includes both the computerized exam and the USPTO-administered exam). PTO–158.	4,420	40.00	176,800.00
1	Application Fee for Registration to Practice Before the United States Patent and Trademark Office, as applicable when used for registration fees only (former examiners; examination waived). PTO–158.	100	40.00	4,000.00
2	Application Fee for Registration to Practice Before the United States Patent and Trademark Office, as applicable when used for registration fees only (former examiners; examination waived). PTO–158A.	100	40.00	4,000.00
3	Application Fee for Reciprocal Recognition to Practice in Trademark Matters Before the United States Patent and Trademark Office Under 37 CFR 11.14(c) by a Foreign Attorney/Agent (examination waived). PTO–158T.	25	40.00	1,000.00
4	Application for Registration in the USPTO Law School Program for Law Students to Practice Before the United States Patent and Trademark Office Under 37 CFR 11.14(c) (examination waived; Law School students only). PTO–158LS.	60	0.61	36.60
5	Registration examination fee for administration of computerized examination to become a registered patent practitioner administered by the USPTO (USPTO-administered exam).	20	450.00	9,000.00
15	Registration examination fee for administration of computerized examination to become a registered patent practitioner administered by a commercial entity (computer exam).	4,400	200.00	880,000.00
6	Undertaking under 37 CFR 11.10(b). PTO–275	520	0.00	0.00
17	Data Sheet—Register of Patent Attorneys and Agents (individuals passing the registration exam). PTO–107A.	1,995	100.00	199,500.00
7	Data Sheet—Register of Patent Attorneys and Agents (foreign applicants). PTO–107A.	100	100.00	10,000.00
7	Data Sheet—Register of Patent Attorneys and Agents (former examiners seeking registration). PTO–107A.	100	100.00	10,000.00
8	Oath or Affirmation. PTO–1209	2,195	0.00	0.00
9	Reinstatement to the Register. PTO–107A	30	100.00	3,000.00
10	Written request for reconsideration and further review of disapproval notice of application.	30	130.00	3,900.00
11	Cover pages used for submitting correspondence to OED (for documents submitted with applications, requests for reconsideration, and petitions).	7,500	0.00	0.00
12	Change of address	4,200	0.00	0.00
13	Petition to the Director of the Office of Enrollment and Discipline under 11.12(c)	20	130.00	2,600.00
13	Petition for reinstatement after disciplinary removal under 37 CFR 11.7(h)	4	1,600.00	6,400.00
13	Non-Refundable Application Fee for Enrollment and/or Reinstatement to Practice Before the United States Patent and Trademark Office under 37 CFR 1.21(a)(10) (those who must prove fitness to practice).	35	1,600.00	56,000.00
14	Practitioner's supporting documentation for a motion to hold in abeyance a disciplinary proceeding because of a current disability or addiction.	1	11,400.00	11,400.00
Total		25,855		$1,377,636.60

The General Requirements Bulletin for Admission to the Examination for Registration to Practice in Patent Cases before the USPTO states that all business with the USPTO should be transacted in writing. The actions of the OED will be based exclusively on the written record in the USPTO (37 CFR 1.2). Personal attendance is unnecessary. All documents may be submitted to the USPTO by first-class mail through the United States Postal Service. Mailed submissions may include a certificate of mailing for each piece of correspondence enclosed, stating the date of deposit or transmission to the USPTO. The USPTO estimates that the average first-class postage cost for responses to this collection will vary from $0.49 cents for one ounce to $4.80 for one pound, depending on the individual submission. The total annual non-hour cost burden associated with postage costs is $4,001.20.

	Item	Responses (a)	Postage Fee ($) (b)	Total non-hour cost burden (a) × (b) (c)
ITEMS FOR WHICH POSTAGE FEES CURRENTLY ARE COLLECTED				
1	Non-Refundable Application Fee for Registration to Practice Before the United States Patent and Trademark Office (includes both the computerized exam and the USPTO-administered exam). PTO–158.	4,420	$0.61	2,696.20
1	Application Fee for Registration to Practice Before the United States Patent and Trademark Office, as applicable when used for registration fees only (former examiners; examination waived). PTO–158.	100	0.61	61.00
2	Application Fee for Registration to Practice Before the United States Patent and Trademark Office, as applicable when used for registration fees only (former examiners; examination waived). PTO–158A.	100	0.49	49.00
3	Application Fee for Reciprocal Recognition to Practice in Trademark Matters Before the United States Patent and Trademark Office Under 37 CFR 11.14(c) by a Foreign Attorney/Agent (examination waived). PTO–158T.	25	0.61	15.25
4	Application for Registration in the USPTO Law School Program for Law Students to Practice Before the United States Patent and Trademark Office Under 37 CFR 11.14(c) (examination waived; Law School students only). PTO–158LS.	60	0.61	36.60
5	Registration examination fee for administration of computerized examination to become a registered patent practitioner administered by the USPTO (USPTO-administered exam).	20	0.00	0.00
5	Registration examination fee for administration of computerized examination to become a registered patent practitioner administered by a commercial entity (computer exam).	4,400	0.00	0.00
6	Undertaking under 37 CFR 11.10(b). PTO–275	520	0.00	0.00
7	Data Sheet—Register of Patent Attorneys and Agents (individuals passing the registration exam). PTO–107A.	1,995	0.49	977.55
7	Data Sheet—Register of Patent Attorneys and Agents (foreign applicants). PTO–107A.	100	0.49	49.00
7	Data Sheet—Register of Patent Attorneys and Agents (former examiners seeking registration). PTO–107A.	100	0.49	49.00
8	Oath or Affirmation. PTO–1209	2,195	0.00	0.00
9	Reinstatement to the Register. PTO–107A	30	0.49	14.70
10	Written request for reconsideration and further review of disapproval notice of application.	30	0.61	18.30
11	Cover pages used for submitting correspondence to OED (for documents submitted with applications, requests for reconsideration, and petitions).	7,500	0.00	0.00
12	Change of address	4,200	0.00	0.00
13	Petition to the Director of the Office of Enrollment and Discipline under 11.12(c).	20	1.73	34.60
13	Petition for reinstatement after disciplinary removal under 37 CFR 11.7(h)	4	0.00	0.00
13	Non-Refundable Application Fee for Enrollment and/or Reinstatement to Practice Before the United States Patent and Trademark Office under 37 CFR 1.21(a)(10) (those who must prove fitness to practice).	35	0.00	0.00
14	Practitioner's supporting documentation for a motion to hold in abeyance a disciplinary proceeding because of a current disability or addiction.	1	0.00	0.00
Total		25,855		4,001.20

The USPTO estimates that the total (non-hour) respondent cost burden for this collection in the form of recordkeeping costs, filing fees, and postage costs is $1,538,386.14.

IV. Request for Comments

Comments submitted in response to this notice will be summarized and/or included in the request for OMB approval. All comments will become a matter of public record.

The USPTO is soliciting public comments to: (a) Evaluate whether the proposed collection of information is necessary for the proper performance of the functions of the agency, including whether the information will have practical utility; (b) Evaluate the

accuracy of the agency's estimate of the burden of the proposed collection of information, including the validity of the methodology and assumptions used; (c) Enhance the quality, utility, and clarity of the information to be collected; and (d) Minimize the burden of the collection of information on those who are to respond, including through the use of appropriate automated, electronic, mechanical, or other technological collection techniques or other forms of information technology, e.g., permitting electronic submission of responses.

Dated: June 25, 2014.

Susan K. Fawcett,

Records Officer, USPTO, Office of the Chief Information Officer.

[FR Doc. 2014–15217 Filed 6–27–14; 8:45 am]

BILLING CODE 3510–16–P

DEPARTMENT OF COMMERCE

United States Patent and Trademark Office

[Docket No.: PTO–P–2014–0036]

Request for Comments and Extension of Comment Period on Examination Instruction and Guidance Pertaining to Patent-Eligible Subject Matter

AGENCY: United States Patent and Trademark Office, Commerce.

ACTION: Request for comments.

SUMMARY: The United States Supreme Court (Supreme Court) recently issued a decision in *Alice Corporation Pty. Ltd. v. CLS Bank International* (*Alice Corp.*), which dealt with claims to a computerized scheme for mitigating settlement risk. The Supreme Court held in a unanimous decision that the claimed subject matter was not patent-eligible because it was drawn to the abstract idea of intermediated settlement implemented on a generic computer. The United States Patent and Trademark Office (USPTO) has issued preliminary instructions on *Alice Corp.* to the patent examining corps and these preliminary instructions have been posted on the USPTO's Internet Web site. The USPTO is inviting public comment on the *Alice Corp.* preliminary instructions. The USPTO is also extending the period for public comment on the Examination Guidance For Determining Subject Matter Eligibility Of Claims Reciting Or Involving Laws of Nature, Natural Phenomena, and Natural Products (Laws of Nature/Natural Products Guidance).

DATES: Written comments on the *Alice Corp.* preliminary instructions and/or on the Laws of Nature/Natural Products Guidance must be received on or before July 31, 2014.

ADDRESSES: Comments on the *Alice Corp.* preliminary instructions may be sent by electronic mail message over the Internet addressed to: *alice_2014@uspto.gov.*

Comments on the Laws of Nature/Natural Products Guidance may be sent by electronic mail message over the Internet addressed to: *myriad-mayo_2014@uspto.gov.*

Comments that apply to both the *Alice Corp.* preliminary instructions and the Laws of Nature/Natural Products Guidance may be sent by electronic mail message over the Internet addressed to either: *myriad-mayo_2014@uspto.gov*, or *alice_2014@uspto.gov.*

Electronic comments submitted in plain text are preferred, but also may be submitted in ADOBE® portable document format or MICROSOFT WORD® format. Comments not submitted electronically should be submitted on paper in a format that facilitates convenient digital scanning into ADOBE® portable document format. The comments will be available for viewing via the Office's Internet Web site (*http://www.uspto.gov*). Because comments will be made available for public inspection, information that the submitter does not desire to make public, such as an address or phone number, should not be included in the comments.

FOR FURTHER INFORMATION CONTACT: Raul Tamayo, Senior Legal Advisor, Office of Patent Legal Administration, by telephone at 571–272–7728, or Caroline D. Dennison, Senior Legal Advisor, Office of Patent Legal Administration, by telephone at 571–272–7729.

SUPPLEMENTARY INFORMATION: The Supreme Court recently issued a decision in *Alice Corp.* (*Alice Corporation Pty. Ltd. v. CLS Bank International,* 573 U.S.____(2014)), which dealt with claims to a computerized scheme for mitigating settlement risk. The Supreme Court held in a unanimous decision that the claimed subject matter in question was not patent-eligible because it was drawn to the abstract idea of intermediated settlement implemented on a generic computer. The United States Patent and Trademark Office (USPTO) has issued preliminary instructions to the patent examining corps and these preliminary instructions are available on the USPTO's Internet Web site (patent examining corps guidance and instructions can be found at: *http://www.uspto.gov/patents/law/exam/examguide.jsp*). The USPTO is inviting public comment on the *Alice Corp.* preliminary instructions before providing more comprehensive guidance to the patent examining corps. Written comments on the *Alice Corp.* preliminary instructions must be received on or before July 31, 2014.

The USPTO is also extending the period for public comment on the Laws of Nature/Natural Products Guidance. The USPTO published the Laws of Nature/Natural Products Guidance on its Internet Web site (as discussed previously, examining corps guidance and instructions can be found at: *http://www.uspto.gov/patents/law/exam/examguide.jsp*). The USPTO also published an announcement on its Internet Web site that it was hosting a public forum (conducted on May 9, 2014) and providing until June 30, 2014, for public comment on the Laws of Nature/Natural Products Guidance. *See Notice of Forum on the Guidance For Determining Subject Matter Eligibility of Claims Reciting or Involving Laws of nature, Natural Phenomena, and Natural Products,* 79 FR 21736 (Apr. 17, 2014).

The USPTO has received several requests from our stakeholders for additional time to submit comments on the Laws of Nature/Natural Products Guidance. In addition, the Supreme Court in *Alice Corp.* applied its framework from *Mayo Collaborative Services v. Prometheus Laboratories, Inc.,* 566 U.S.____(2012), in determining whether the claims in *Alice Corp.* were directed to a patent-ineligible abstract idea. For these reasons, the USPTO is extending the period for public comment on the Laws of Nature/Natural Products Guidance until July 31, 2014.

Dated: June 25, 2014.

Margaret A. Focarino,

Commissioner for Patents.

[FR Doc. 2014–15352 Filed 6–27–14; 8:45 am]

BILLING CODE 3510–16–P

DEPARTMENT OF DEFENSE

Office of the Secretary

[Docket ID DoD–2012–OS–0137]

Proposed Collection; Comment Request

AGENCY: United States Transportation Command, DoD.

ACTION: Notice.

SUMMARY: In compliance with Section 3506(c)(2)(A) of the *Paperwork Reduction Act of 1995,* the United States

Transportation Command announces a proposed public information collection and seeks public comment on the provisions thereof. Comments are invited on: (a) Whether the proposed collection of information is necessary for the proper performance of the functions of the agency, including whether the information shall have practical utility; (b) the accuracy of the agency's estimate of the burden of the proposed information collection; (c) ways to enhance the quality, utility, and clarity of the information to be collected; and (d) ways to minimize the burden of the information collection on respondents, including through the use of automated collection techniques or other forms of information technology.

DATES: Consideration will be given to all comments received by August 29, 2014.

ADDRESSES: You may submit comments, identified by docket number and title, by any of the following methods:

- Federal eRulemaking Portal: *http://www.regulations.gov.* Follow the instructions for submitting comments.
- Mail: Federal Docket Management System Office, 4800 Mark Center Drive, East Tower, Suite 02G09, Alexandria, VA 22350–3100.

Instructions: All submissions received must include the agency name, docket number and title for this **Federal Register** document. The general policy for comments and other submissions from members of the public is to make these submissions available for public viewing on the Internet at *http://www.regulations.gov* as they are received without change, including any personal identifiers or contact information.

FOR FURTHER INFORMATION CONTACT: To request more information on this proposed information collection or to obtain a copy of the proposal and associated collection instruments, please write to the United States Transportation Command, ATTN: Diana Roach, 508 Scott Drive, Scott Air Force Base, IL 62225 or call (608) 220–1724.

SUPPLEMENTARY INFORMATION:

Title; Associated Form; and OMB Number: Industry Executive Office Survey of United States Transportation Command; OMB Control Number: 0704–TBD.

Needs and Uses: The information collection requirement is necessary to assist USTRANSCOM pursue process improvement and set priorities to enable us to gain efficiencies and improve effectiveness.

Affected Public: Chief Executive Officers of Companies.

Annual Burden Hours: 27 hours.

Number of Respondents: 160.

Responses per Respondent: 1.

Average Burden per Response: 10 minutes.

Frequency: On occasion.

The annual survey measures the perceptions of executives from companies that support the USTRANSCOM missions such as those companies in the Civil Reserve Air Fleet and Voluntary Intermodal Sealift Agreement. The information is used to improve our processes, structures, and culture to be more effective in providing global mobility solutions to support customer requirements in peace and war, developing and maintaining professional relationships, and keeping overhead and operating costs down.

Dated: June 24, 2014.

Aaron Siegel,

Alternate OSD Federal Register Liaison Officer, Department of Defense.

[FR Doc. 2014–15169 Filed 6–27–14; 8:45 am]

BILLING CODE 5001–06–P

DEPARTMENT OF DEFENSE

Office of the Secretary

Re-Establishment of Department of Defense Federal Advisory Committees

AGENCY: DoD.

ACTION: Re-establishment of Federal Advisory Committee.

SUMMARY: The Department of Defense is publishing this notice to announce that it is re-establishing the charter for the Defense Acquisition University Board of Visitors (''the Board'').

FOR FURTHER INFORMATION CONTACT: Jim Freeman, Advisory Committee Management Officer for the Department of Defense, 703–692–5952.

SUPPLEMENTARY INFORMATION: This committee's charter is being re-established under the provisions of the Federal Advisory Committee Act of 1972 (5 U.S.C. Appendix, as amended), the Government in the Sunshine Act of 1976 (5 U.S.C. 552b) (''the Sunshine Act''), and 41 CFR 102–3.50(d).

The Board is a discretionary Federal advisory committee that shall provide the Secretary of Defense, through the Under Secretary of Defense for Acquisition, Technology and Logistics (USD(AT&L)) and the President of the Defense Acquisition University, independent advice and recommendations on the organizational management, curricula, methods of instruction, facilities, and other matters of interest to the Defense Acquisition University.

The Board shall report to the Secretary of Defense, through the USD(AT&L) and the President of the Defense Acquisition University. The USD(AT&L) or a designated representative may act upon the Board's advice and recommendations.

The DoD, through the USD(AT&L) and the President of the Defense Acquisition University, shall provide support, as they deem necessary, for the performance of the Board's functions, and shall ensure compliance with the requirements of the FACA, the Government in the Sunshine Act of 1976 (5 U.S.C. 552b) (''the Sunshine Act''), governing Federal statutes and regulations, and established DoD policies and procedures.

The Board shall be composed of not more than 14 members, who are former senior Defense officials, or are eminent authorities in academia, business, and defense industry. Board members shall be appointed by the Secretary of Defense or the Deputy Secretary of Defense, and their appointments will be renewed on an annual basis. Board members, who are not full-time or permanent part-time Federal officers or employees, shall be appointed as experts and consultants under the authority of 5 U.S.C. 3109, and serve as special government employee (SGE) members. Board members who are full-time or permanent part-time Federal employees shall serve as regular government employee (RGE) members.

With the exception of travel and per diem for official Board related travel, Board members shall serve without compensation.

The Secretary of Defense, in consultation with the USD(AT&L), shall select the Board's Chairperson from the approved Board membership, and this individual shall serve at the discretion of the Secretary of Defense, through the USD(AT&L).

In addition, the USD(AT&L) may invite other distinguished Government officers to serve as non-voting observers of the Board, and appoint, pursuant to 5 U.S.C. 3109, non-voting consultants, with special expertise, to assist the Board on an ad hoc basis.

The Secretary of Defense may approve the appointment of Board members for one to four year terms of service; however, no member, unless authorized by the Secretary of Defense, may serve more than two consecutive terms of service. This same term of service limitation also applies to any DoD authorized subcommittees.

Each Board member is appointed to provide advice on behalf of the government on the basis of his or her best judgment without representing any particular point of view and in a manner that is free from conflict of interest.

The DoD, when necessary and consistent with the Board's mission and DoD policies and procedures, may establish subcommittees, task forces, or working groups deemed necessary to support the Board. Establishment of subcommittees will be based upon a written determination, to include terms of reference, by the Secretary of Defense, the Deputy Secretary of Defense, or the USD(AT&L), as the Board's sponsor.

Such subcommittees shall not work independently of the chartered Board, and shall report all their recommendations and advice to the Board for full deliberation and discussion. Subcommittees have no authority to make decisions, verbally or in writing, on behalf of the chartered Board; nor can any subcommittee or its members update or report directly to the DoD or to any Federal officers or employees.

All subcommittee members shall be appointed in the same manner as the Board members; that is, the Secretary of Defense or the Deputy Secretary of Defense shall appoint subcommittee members even if the member in question is already a Board member. Subcommittee members, with the approval of the Secretary of Defense, may serve a term of service on the subcommittee of one to four years.

Subcommittee members, if not full-time or part-time government employees, shall be appointed to serve as experts and consultants under the authority of 5 U.S.C. 3109, and shall serve as SGE members, whose appointments must be renewed by the Secretary of Defense on an annual basis. Subcommittee members who are full-time or permanent part-time Federal employees shall be appointed as RGE members. With the exception of travel and per diem for official Board related travel, subcommittee members shall serve without compensation.

All subcommittees operate under the provisions of FACA, the Sunshine Act, governing Federal statutes and regulations, and established DoD policies and procedures.

The Designated Federal Officer (DFO), pursuant to DoD policy, shall be a full-time or permanent part-time DoD employee, and shall be appointed in accordance with governing DoD policies and procedures.

In addition, the Board's DFO is required to be in attendance at all Board and any subcommittee meetings for the entire duration of each and every meeting; however, in the absence of the DFO, a properly approved Alternate DFO shall attend the entire duration of the Board or subcommittee meetings.

The DFO, or the Alternate DFO, shall call all meetings of the Board's and its subcommittees; prepare and approve all meeting agendas; and adjourn any meeting when the DFO, or the Alternate DFO, determines adjournment to be in the public interest or required by governing regulations or DoD policies and procedures; and chair meetings when directed to do so by the official to whom the Board reports.

Pursuant to 41 CFR 102–3.105(j) and 102–3.140, the public or interested organizations may submit written statements to Defense Acquisition University Board of Visitors membership about the Board's mission and functions. Written statements may be submitted at any time or in response to the stated agenda of planned meeting of Defense Acquisition University Board of Visitors.

All written statements shall be submitted to the DFO for the Defense Acquisition University Board of Visitors, and this individual will ensure that the written statements are provided to the membership for their consideration. Contact information for the Defense Acquisition University Board of Visitors DFO can be obtained from the GSA's FACA Database—*http://www.facadatabase.gov/.*

The DFO, pursuant to 41 CFR 102–3.150, will announce planned meetings of the Defense Acquisition University Board of Visitors. The DFO, at that time, may provide additional guidance on the submission of written statements that are in response to the stated agenda for the planned meeting in question.

Dated: June 25, 2014.

Aaron Siegel,

Alternate OSD Federal Register Liaison Officer, Department of Defense.

[FR Doc. 2014–15227 Filed 6–27–14; 8:45 am]

BILLING CODE 5001–06–P

DEPARTMENT OF DEFENSE

Department of the Army

Change to the Military Freight Carrier Registration Program (FCRP)

AGENCY: Department of the Army, DoD.

SUMMARY: The Military Surface Deployment and Distribution Command (SDDC) is providing notice that it will, effective immediately, no longer accept domestic motor transportation service provider (TSP) registrations until further notice. This will affect domestic motor TSPs only (common, contract, logistics, freight forwarders, and brokers). This does not apply to registration of air, rail, ocean, pipeline, barge, international, and household goods TSPs. This update will be included in the next release of the Military Freight Traffic Unified Rules Publication (MFTURP) No. 1. At such time as it is deemed necessary to accept new registrations, it will be posted on the *www.sddc.army.mil* public Web site under Strategic Business.

ADDRESSES: Submit comments to Military Surface Deployment and Distribution Command, ATTN: AMSSD–SBC–S, 1 Soldier Way, Scott AFB, IL 62225–5006. Request for additional information may be sent by email to: *usarmy.scott.sddc.mbx.carrier-registrations@mail.mil.*

FOR FURTHER INFORMATION CONTACT: Carrier Registration Team, (618) 220–6470.

SUPPLEMENTARY INFORMATION:

References: SDDC Docketing System, Docket Misc., 1015.

Background: SDDC is currently experiencing reorganization and reassessing programs and procedures.

Miscellaneous: The SDDC Docketing System can be accessed at *http://docketing.sddc.army.mil.*

Melvin A. Holland III,

Director, Strategic Requirements.

[FR Doc. 2014–15318 Filed 6–27–14; 8:45 am]

BILLING CODE 3710–08–P

DEPARTMENT OF DEFENSE

Department of the Army

Board of Visitors, United States Military Academy (USMA)

AGENCY: Department of the Army, DoD.

ACTION: Notice of open committee meeting.

SUMMARY: The Department of the Army is publishing this notice to announce the following Federal advisory committee meeting of the USMA Board of Visitors (BoV). This meeting is open to the public. For more information about the BoV, its membership and its activities, please visit the BoV Web site at *http://www.usma.edu/bov/SitePages/Home.aspx.*

DATES: The USMA BoV will meet from 1:00 p.m. until 4:00 p.m. on Monday, July 21, 2014. Members of the public wishing to attend the meeting will be required to show a government photo ID upon entering West Point and in order to gain access to the meeting location. All members of the public are subject to security screening.

ADDRESSES: Haig Room, Jefferson Hall, West Point, NY 10996, subject to availability—changes will be announced.

FOR FURTHER INFORMATION CONTACT: Mrs. Deadra K. Ghostlaw, the Designated Federal Officer for the committee, in writing at Secretary of the General Staff, ATTN: Deadra K. Ghostlaw, 646 Swift Road, West Point, NY 10996, by email at *deadra.ghostlaw@usma.edu* or *BoV@usma.edu*, or by telephone at (845) 938–4200.

SUPPLEMENTARY INFORMATION: The committee meeting is being held under the provisions of the Federal Advisory Committee Act of 1972 (5 U.S.C., Appendix, as amended), the Government in the Sunshine Act of 1976 (5 U.S.C. 552b, as amended), and 41 CFR 102–3.150.

Purpose of the Meeting: This is the 2014 Summer Meeting of the USMA BoV. The USMA BOV is an independent Federal advisory committee chartered to provide the Secretary of the Army independent advice and recommendations on the USMA Board of Visitors. Members of the Board will be provided updates on Academy issues.

Proposed Agenda: The Academy leadership will provide the Board with updates on the following matters: Accreditation, Curriculum, Cadet Summer Training, Infrastructure, Class of 2018 Admissions, and Manning Update/4-Year Picture. Finally, the USMA Superintendent will brief the Board.

Public's Accessibility to the Meeting: Pursuant to 5 U.S.C. 552b and 41 CFR 102–3.140 through 102–3.165 and subject to the availability of space, this meeting is open to the public. Seating is on a first to arrive basis. Attendees are requested to submit their name, affiliation, and daytime phone number seven business days prior to the meeting to Mrs. Ghostlaw, via electronic mail, the preferred mode of submission, at the address listed in the **FOR FURTHER INFORMATION CONTACT** section. Members of the public attending the committee meeting will not be permitted to present questions from the floor or speak to any issue under consideration by the committee. Because the meeting of the committee will be held in a Federal Government facility on a military post, security screening is required. A government photo ID is required to enter post. Please note that security and gate guards have the right to inspect vehicles and persons seeking to enter and exit the installation. The United States Military Academy, Jefferson Hall, is fully handicap accessible. Wheelchair access is available at the south entrance of the building. For additional information about public access procedures, contact Mrs. Ghostlaw, the committee's Designated Federal Officer, at the email address or telephone number listed in the **FOR FURTHER INFORMATION CONTACT** section.

Written Comments or Statements: Pursuant to 41 CFR 102–3.105(j) and 102–3.140 and section 10(a)(3) of the Federal Advisory Committee Act, the public or interested organizations may submit written comments or statements to the committee, in response to the stated agenda of the open meeting or in regard to the committee's mission in general. Written comments or statements should be submitted to Mrs. Ghostlaw, the committee Designated Federal Officer, via electronic mail, the preferred mode of submission, at the address listed in the **FOR FURTHER INFORMATION CONTACT** section. Each page of the comment or statement must include the author's name, title or affiliation, address, and daytime phone number. Written comments or statements being submitted in response to the agenda set forth in this notice must be received by the Designated Federal Official at least seven business days prior to the meeting to be considered by the committee. The Designated Federal Official will review all timely submitted written comments or statements with the committee Chairperson, and ensure the comments are provided to all members of the committee before the meeting. Written comments or statements received after this date may not be provided to the committee until its next meeting. Pursuant to 41 CFR z102–3.140d, the committee is not obligated to allow a member of the public to speak or otherwise address the committee during the meeting. Members of the public will be permitted to make verbal comments during the committee meeting only at the time and in the manner described below. If a member of the public is interested in making a verbal comment at the open meeting, that individual must submit a request, with a brief statement of the subject matter, to be addressed by the comment, at least three (3) business days in advance to the committee's Designated Federal Official, via electronic mail, the preferred mode of submission, at the address listed in the **FOR FURTHER INFORMATION CONTACT** section. The Designated Federal Official will log each request, in the order received, and in consultation with the committee Chairperson, determine whether the subject matter of each comment is relevant to the committee's mission and/or the topics to be addressed in this public meeting. A 15-minute period near the end of the meeting will be available for verbal public comments. Members of the public who have requested to make a verbal comment and whose comments have been deemed relevant under the process described above will be allotted no more than three (3) minutes during this period, and will be invited to speak in the order in which their requests were received by the Designated Federal Official.

Brenda S. Bowen,

Army Federal Register Liaison Officer.

[FR Doc. 2014–15237 Filed 6–27–14; 8:45 am]

BILLING CODE 3710–08–P

DEPARTMENT OF EDUCATION

[Docket No. ED–2014–ICCD–0100]

Agency Information Collection Activities; Submission to the Office of Management and Budget for Review and Approval; Comment Request; National Assessment of Education Progress (NAEP) Main 2015 Wave 2

AGENCY: Department of Education (ED), IES, NCES.

ACTION: Notice.

SUMMARY: In accordance with the Paperwork Reduction Act of 1995 (44 U.S.C. chapter 3501 *et seq.*), ED is proposing a revision of an existing information collection.

DATES: Interested persons are invited to submit comments on or before July 30, 2014.

ADDRESSES: Comments submitted in response to this notice should be submitted electronically through the Federal eRulemaking Portal at *http://www.regulations.gov* by selecting Docket ID number ED–2014–ICCD–0100 or via postal mail, commercial delivery, or hand delivery. Please note that comments submitted by fax or email and those submitted after the comment period will not be accepted. Written requests for information or comments submitted by postal mail or delivery should be addressed to the Director of the Information Collection Clearance Division, U.S. Department of Education, 400 Maryland Avenue SW., LBJ, Room 2E105, Washington, DC 20202–4537.

FOR FURTHER INFORMATION CONTACT: Electronically mail *ICDocketMgr@ed.gov*. Please do not send comments here.

SUPPLEMENTARY INFORMATION: The Department of Education (ED), in accordance with the Paperwork Reduction Act of 1995 (PRA) (44 U.S.C. 3506(c)(2)(A)), provides the general public and Federal agencies with an opportunity to comment on proposed,

revised, and continuing collections of information. This helps the Department assess the impact of its information collection requirements and minimize the public's reporting burden. It also helps the public understand the Department's information collection requirements and provide the requested data in the desired format. ED is soliciting comments on the proposed information collection request (ICR) that is described below. The Department of Education is especially interested in public comment addressing the following issues: (1) Is this collection necessary to the proper functions of the Department; (2) will this information be processed and used in a timely manner; (3) is the estimate of burden accurate; (4) how might the Department enhance the quality, utility, and clarity of the information to be collected; and (5) how might the Department minimize the burden of this collection on the respondents, including through the use of information technology. Please note that written comments received in response to this notice will be considered public records.

Title of Collection: National Assessment of Education Progress (NAEP) Main 2015 Wave 2.

OMB Control Number: 1850–0790.

Type of Review: Revision of an existing collection of information.

Respondents/Affected Public: States, Local, and Tribal Governments.

Total Estimated Number of Annual Responses: 474,858.

Total Estimated Number of Annual Burden Hours: 270,477.

Abstract: The National Assessment of Educational Progress (NAEP) is a federally authorized survey of student achievement at grades 4, 8, and 12 in various subject areas, such as mathematics, reading, writing, science, U.S. history, civics, geography, economics, and the arts. In the current legislation that reauthorized NAEP (20 U.S.C. 9622), Congress again mandated the collection of national education survey data through a national assessment program. The 2015 Wave 2 submittal contains: (a) The grades 4, 8, and 12 core (demographic) student questions; (b) the grades 4, 8, and 12 science subject-specific student questions; (c) the grades 4 and 8 KaSA (Knowledge and Skills Appropriate) student core questions adapted for Puerto Rico (PR); (d) the grades 4 and 8 teacher science, KaSA (PR), and NIES (National Indian Education Study) survey questionnaires; and (e) the school science (grades 4, 8, 12); KaSA (PR) (grades 4, 8); and NIES (grades 4, 8) questionnaires.

Dated: June 25, 2014.

Stephanie Valentine,

Acting Director, Information Collection Clearance Division, Privacy, Information and Records Management Services, Office of Management.

[FR Doc. 2014–15260 Filed 6–27–14; 8:45 am]

BILLING CODE 4000–01–P

DEPARTMENT OF ENERGY

[OE Docket No. EA–249–C]

Application To Export Electric Energy; Exelon Generation Company, LLC

AGENCY: Office of Electricity Delivery and Energy Reliability, DOE.

ACTION: Notice of Application.

SUMMARY: Exelon Generation Company, LLC (Applicant) has applied to renew its authority to transmit electric energy from the United States to Canada pursuant to section 202(e) of the Federal Power Act.

DATES: Comments, protests, or motions to intervene must be submitted on or before July 30, 2014.

ADDRESSES: Comments, protests, motions to intervene, or requests for more information should be addressed to: Office of Electricity Delivery and Energy Reliability, Mail Code: OE–20, U.S. Department of Energy, 1000 Independence Avenue SW., Washington, DC 20585–0350. Because of delays in handling conventional mail, it is recommended that documents be transmitted by overnight mail, by electronic mail to *Electricity.Exports@hq.doe.gov,* or by facsimile to 202–586–8008.

SUPPLEMENTARY INFORMATION: Exports of electricity from the United States to a foreign country are regulated by the Department of Energy (DOE) pursuant to sections 301(b) and 402(f) of the Department of Energy Organization Act (42 U.S.C. 7151(b), 7172(f)) and require authorization under section 202(e) of the Federal Power Act (16 U.S.C. 824a(e)).

On August 4, 2009, DOE issued Order No. EA–249–B to the Applicant, which authorized the Applicant to transmit electric energy from the United States to Canada as a power marketer for a five-year term using existing international transmission facilities. That authority expires on August 4, 2014. On June 5, 2014, the Applicant filed an application with DOE for renewal of the export authority contained in Order No. EA–249–B for an additional ten-year term. The Applicant is also requesting expedited treatment of this renewal application and issuance of an order within 60 days to avoid any lapse in the Applicant's authority to export electricity to Canada.

In its application, the Applicant states that it has a diverse portfolio of owned or controlled electric capacity nationwide but that it does not own or operate any electric transmission facilities, and it does not have a franchised service area. The electric energy that the Applicant proposes to export to Canada would either be generated by the Applicant or would be surplus energy purchased from third parties such as electric utilities and Federal power marketing agencies pursuant to voluntary agreements. The existing international transmission facilities to be utilized by the Applicant have previously been authorized by Presidential permits issued pursuant to Executive Order 10485, as amended, and are appropriate for open access transmission by third parties.

Procedural Matters: Any person desiring to be heard in this proceeding should file a comment or protest to the application at the address provided above. Protests should be filed in accordance with Rule 211 of the Federal Energy Regulatory Commission's (FERC) Rules of Practice and Procedures (18 CFR 385.211). Any person desiring to become a party to these proceedings should file a motion to intervene at the above address in accordance with FERC Rule 214 (18 CFR 385.214). Five copies of such comments, protests, or motions to intervene should be sent to the address provided above on or before the date listed above.

Comments on the Applicant's application to export electric energy to Canada should be clearly marked with OE Docket No. EA–249–C. An additional copy is to be provided directly to Vincenzo Franco, Assistant General Counsel—Wholesale Trading Compliance, Exelon Corporation, 111 Market Place, Suite 500, Baltimore, MD 21202 and Christopher A. Wilson, Director, Federal Regulatory Affairs, Exelon Corporation, 101 Constitution Ave. NW., Suite 400 East, Washington, DC 20001.

A final decision will be made on this application after the environmental impacts have been evaluated pursuant to DOE's National Environmental Policy Act Implementing Procedures (10 CFR part 1021) and after a determination is made by DOE that the proposed action will not have an adverse impact on the sufficiency of supply or reliability of the U.S. electric power supply system.

Copies of this application will be made available, upon request, for public inspection and copying at the address provided above, by accessing the

program Web site at *http://energy.gov/node/11845,* or by emailing Angela Troy at *Angela.Troy@hq.doe.gov*.

Issued in Washington, DC, on June 24, 2014.

Brian Mills,

Director, Permitting and Siting, Office of Electricity Delivery and, Energy Reliability.

[FR Doc. 2014–15310 Filed 6–27–14; 8:45 am]

BILLING CODE 6450–01–P

DEPARTMENT OF ENERGY

Advanced Scientific Computing Advisory Committee; Meeting

AGENCY: Office of Science, Department of Energy.

ACTION: Notice of Open Teleconference Meeting.

SUMMARY: This notice announces a meeting of the Advanced Scientific Computing Advisory Committee (ASCAC). The Federal Advisory Committee Act (Pub. L. 92–463, 86 Stat. 770) requires that public notice of these meetings be announced in the **Federal Register**.

DATES: Tuesday, July 15, 2014, 11:00 a.m. to 1:00 p.m. ET.

ADDRESSES: The meeting is open to the public. To access the call:

1. Dial Toll-Free Number: 866–740–1260 (U.S. & Canada).
2. International participants dial: *http://www.readytalk.com/intl.*
3. Enter access code 8083012, followed by ''#''.

To ensure we have sufficient access lines for the public, we request that members of the public notify Christine Chalk, the Designated Federal Officer, that you intend to call into the meeting via email at: *christine.chalk@science.doe.gov.*

FOR FURTHER INFORMATION CONTACT: Melea Baker, Office of Advanced Scientific Computing Research; SC–21/Germantown Building; U.S. Department of Energy; 1000 Independence Avenue SW., Washington, DC 20585–1290; Telephone (301) 903–7486, (Email: *Melea.Baker@science.doe.gov*).

SUPPLEMENTARY INFORMATION:

Purpose of the Meeting: The purpose of this meeting is to provide advice and guidance on a continuing basis to the Department of Energy on scientific priorities within the field of advanced scientific computing research.

Tentative Agenda Topic:

- To discuss and vote on Work Force Subcommittee Report.

Public Participation: The teleconference meeting is open to the public. If you would like to file a written statement with the Committee, you may do so either before or after the meeting. If you would like to make oral statements regarding any of the items on the agenda, you should contact Melea Baker via FAX at 301–903–4846 or via email (*Melea.Baker@science.doe.gov*). You must make your request for an oral statement at least 5 business days prior to the meeting. Reasonable provision will be made to include the scheduled oral statements on the agenda. The Chairperson of the Committee will conduct the meeting to facilitate the orderly conduct of business. Public comment will follow the 10-minute rule.

Minutes: The minutes of this meeting will be available for public review and copying within 30 days at the by contacting Ms. Melea Baker at the address or email listed above.

Issued in Washington, DC, on June 24, 2014.

LaTanya R. Butler,

Deputy Committee Management Officer.

[FR Doc. 2014–15309 Filed 6–27–14; 8:45 am]

BILLING CODE 6450–01–P

DEPARTMENT OF ENERGY

Quadrennial Energy Review: Notice of Public Meeting

AGENCY: Office of Energy Policy and Systems Analysis, Secretariat, Quadrennial Energy Review Task Force, Department of Energy.

ACTION: Notice of public meeting.

SUMMARY: At the direction of the President, the U.S. Department of Energy (DOE or Department), as the Secretariat for the Quadrennial Energy Review Task Force (QER) Task Force will convene a public meeting to discuss and receive comments on issues related to the Quadrennial Energy Review.

DATES: The fifth public meeting will be held on Friday, July 11, 2014, beginning at 9:00 a.m. Written comments are welcome, especially following the public meeting, and should be submitted within 60 days of the meeting.

ADDRESSES: The July 11th, meeting will be held at the Lewis & Clark College, Templeton Campus Center-Stamm Dining Room, Portland, Oregon 97219–7899.

You may submit written comments to: *QERComments@hq.doe.gov* or by U.S. mail to the Office of Energy Policy and Systems Analysis, EPSA–60, QER Meeting Comments, U.S. Department of Energy, 1000 Independence Avenue SW., Washington, DC 20585–0121.

For the July 11th, Public Meeting, please title your comment ''Quadrennial Energy Review: Comment on the Public Meeting ''Electricity Transmission, Storage, and Distribution—West, July 11, 2014, Portland, Oregon.

FOR FURTHER INFORMATION CONTACT: Ms. Adonica Renee Pickett, EPSA–90, U.S. Department of Energy, Office of Energy Policy and Systems Analysis, 1000 Independence Avenue SW., Washington, DC 20585–0121. *Telephone:* (202) 586–9168 *Email: Adonica.Pickett@hq.doe.gov.*

SUPPLEMENTARY INFORMATION: On January 9, 2014, President Obama issued a *Presidential Memorandum—Establishing a Quadrennial Energy Review.* To accomplish this review, the Presidential Memorandum establishes a Quadrennial Energy Review Task Force to be co-chaired by the Director of the Office of Science and Technology Policy, and the Director of the Domestic Policy Council. Under the Presidential Memorandum, the Secretary of Energy shall provide support to the Task Force, including support for coordination activities related to the preparation of the Quadrennial Energy Review Report, policy analysis and modeling, and stakeholder engagement.

The DOE, as the Secretariat for the Quadrennial Energy Review Task Force, will hold a series of public meetings to discuss and receive comments on issues related to the Quadrennial Energy Review.

The initial focus for the Quadrennial Energy Review will be our Nation's infrastructure for transporting, transmitting, storing and delivering energy. Our current infrastructure is increasingly challenged by transformations in energy supply, markets, and patterns of end use; issues of aging and capacity; impacts of climate change; and cyber and physical threats. Any vulnerability in this infrastructure may be exacerbated by the increasing interdependencies of energy systems with water, telecommunications, transportation, and emergency response systems. The first Quadrennial Energy Review Report will serve as a roadmap to help address these challenges.

The Department of Energy has a broad role in energy policy development and the largest role in implementing the Federal Government's energy research and development portfolio. Many other executive departments and agencies also play key roles in developing and implementing policies governing energy resources and consumption, as well as

associated environmental impacts. In addition, non-Federal actors are crucial contributors to energy policies. Because most energy and related infrastructure is owned by private entities, investment by and engagement of the private sector is necessary to develop and implement effective policies. State and local policies; the views of nongovernmental, environmental, faith-based, labor, and other social organizations; and contributions from the academic and non-profit sectors are also critical to the development and implementation of effective energy policies.

An interagency Quadrennial Energy Review Task Force, which includes members from all relevant executive departments and agencies (agencies), will develop an integrated review of energy policy that integrates all of these perspectives. It will build on the foundation provided in the Administration's *Blueprint for a Secure Energy Future* of March 30, 2011, and *Climate Action Plan* released on June 25, 2013. The Task Force will offer recommendations on what additional actions it believes would be appropriate. These may include recommendations on additional executive or legislative actions to address the energy challenges and opportunities facing the Nation.

July 11, 2014 Public Meeting: Electricity Transmission, Storage, and Distribution—West, July 11, 2014, Portland, Oregon.

On July 11, 2014, the DOE will hold a public meeting in Portland, Oregon. The July 11, 2014 public meeting will feature facilitated panel discussions, followed by an open microphone session. Persons desiring to speak during the open microphone session at the public meeting should come prepared to speak for no more than 5 minutes and will be accommodated on a first-come, first-serve basis, according to the order in which they register to speak on a sign-in sheet available at the meeting location, on the morning of the meeting.

In advance of the meeting, DOE anticipates making publicly available a briefing memorandum providing useful background information regarding the topics under discussion at the meeting. DOE will post this memorandum on its Web site: *http://energy.gov.*

Submitting comments via email. Submitting comments by email to the QER email address will require you to provide your name and contact information in the transmittal email. Your contact information will be viewable to DOE staff only. Your contact information will not be publicly viewable except for your first and last names, organization name (if any), and submitter representative name (if any). Your contact information will be publicly viewable if you include it in the comment itself or in any documents attached to your comment. Any information that you do not want to be publicly viewable should not be included in your comment, nor in any document attached to your comment. Otherwise, persons viewing comments will see only first and last names, organization names, correspondence containing comments, and any documents submitted with the comments.

Do not submit to the QER email address (*QERcomments@hq.doe.gov*) information for which disclosure is restricted by statute, such as trade secrets and commercial or financial information (hereinafter referred to as Confidential Business Information (CBI)). Comments submitted to the QER email address cannot be claimed as CBI. Comments received through the email address will waive any CBI claims for the information submitted. For information on submitting CBI, see the Confidential Business Information section, below.

If you do not want your personal contact information to be publicly viewable, do not include it in your comment or any accompanying documents. Instead, provide your contact information in a cover letter. Include your first and last names, email address, telephone number, and optional mailing address. The cover letter will not be publicly viewable as long as it does not include any comments.

Include contact information each time you submit comments, data, documents, and other information to DOE. If you submit via mail or hand delivery/courier, please provide all items on a CD, if feasible, in which case it is not necessary to submit printed copies. No telefacsimiles (faxes) will be accepted.

Comments, data, and other information submitted to DOE electronically should be provided in PDF (preferred), Microsoft Word or Excel, WordPerfect, or text (ASCII) file format. Provide documents that are not secured, written in English, and are free of any defects or viruses. Documents should not contain special characters or any form of encryption and, if possible, they should carry the electronic signature of the author.

Confidential Business Information. Pursuant to *10 CFR 1004.11,* any person submitting information that he or she believes to be confidential and exempt by law from public disclosure should submit via email, postal mail, or hand delivery/courier two well-marked copies: One copy of the document marked ''confidential'' including all the information believed to be confidential, and one copy of the document marked ''non-confidential'' with the information believed to be confidential deleted. Submit these documents via email or on a CD, if feasible. DOE will make its own determination about the confidential status of the information and treat it according to its determination. Confidential information should be submitted to the Confidential QER email address: *QERConfidential@hq.doe.gov.*

Factors of interest to DOE when evaluating requests to treat submitted information as confidential include: (1) A description of the items; (2) whether and why such items are customarily treated as confidential within the industry; (3) whether the information is generally known by or available from other sources; (4) whether the information has previously been made available to others without obligation concerning its confidentiality; (5) an explanation of the competitive injury to the submitting person which would result from public disclosure; (6) when such information might lose its confidential character due to the passage of time; and (7) why disclosure of the information would be contrary to the public interest. It is DOE's policy that all comments may be included in the public docket, without change and as received, including any personal information provided in the comments (except information deemed to be exempt from public disclosure).

Issued in Washington, DC, on June 26, 2014.

Michele Torrusio,

QER Secretariat, QER Interagency Task Force, U.S. Department of Energy.

[FR Doc. 2014–15257 Filed 6–27–14; 8:45 am]

BILLING CODE 6450–01–P

DEPARTMENT OF ENERGY

Commission to Review the Effectiveness of the National Energy Laboratories

AGENCY: Department of Energy.

ACTION: Notice of Open Meeting.

SUMMARY: This notice announces an open meeting of the Commission to Review the Effectiveness of the National Energy Laboratories (Commission). The Commission was created pursuant to section 319 of the Consolidated Appropriations Act, 2014, Public Law 113–76, and in accordance with the provisions of the Federal Advisory Committee Act (FACA), as amended, 5

U.S.C. App. 2. This notice is provided in accordance with the Act.

DATES: Friday, July 18, 2014; 10:30 a.m.–4:00 p.m.

ADDRESSES: Department of Energy, 1000 Independence Avenue SW., Washington, DC 20585.

FOR FURTHER INFORMATION CONTACT: Karen Gibson, Designated Federal Officer, U.S. Department of Energy, 1000 Independence Avenue SW., Washington, DC 20585; telephone (202) 586–3787; email: *crenel@hq.doe.gov.*

SUPPLEMENTARY INFORMATION:

Background: The Commission was established to provide advice to the Secretary on the Department's national laboratories. The activities of the Commission will include, but are not limited to: whether the Department of Energy's (DOE) national laboratories—are properly aligned with the Department's strategic priorities; have clear, well understood, and properly balanced missions that are not unnecessarily redundant and duplicative; have unique capabilities that have sufficiently evolved to meet current and future energy and national security challenges; are appropriately sized to meet the Department's energy and national security missions; and are appropriately supporting other Federal agencies and the extent to which it benefits DOE missions. The Commission will determine whether there are opportunities to more effectively and efficiently use the capabilities of the national laboratories. The Commission will also analyze the effectiveness of the use of laboratory directed research and development (LDRD) to meet the Department of Energy's science, energy, and national security goals and evaluate the Department's oversight of LDRD-funded projects for compliance with statutory requirements and congressional direction.

Purpose of the Meeting: This meeting is the first meeting of the Commission.

Tentative Agenda: The meeting will start at 10:30 a.m. on July 18th. The tentative meeting agenda includes discussions with Hill staff, briefings on the national laboratory system, an introduction to prior and current studies focusing on the labs, a discussion with representatives of the National Laboratory Directors Council, and comments from the public. The meeting will conclude at 4:00 p.m.

Public Participation: The meeting is open to the public. Individuals who would like to attend must RSVP to Karen Gibson no later than 5:00 p.m. on Monday, July 14, 2014 by email at: *crenel@hq.doe.gov.* Please provide your name, organization, citizenship, and contact information. Anyone attending the meeting will be required to present government-issued identification. Individuals and representatives of organizations who would like to offer comments and suggestions may do so at the end of the meeting. Approximately 30 minutes will be reserved for public comments. Time allotted per speaker will depend on the number who wish to speak but will not exceed 5 minutes. The Designated Federal Officer is empowered to conduct the meeting in a fashion that will facilitate the orderly conduct of business. Those who did not register in advance to attend the meeting and who wish to speak, should register to do so at the beginning of the meeting at 10:30 a.m. on July 18th.

Those not able to attend the meeting or who have insufficient time to address the committee are invited to send a written statement to Karen Gibson, U.S. Department of Energy, 1000 Independence Avenue SW., Washington DC 20585, or by email at: *crenel@hq.doe.gov.*

Minutes: The minutes of the meeting will be available by contacting Ms. Gibson at postal address or email address above.

Issued in Washington, DC, on June 24, 2014.

LaTanya R. Butler,

Deputy Committee Management Officer.

[FR Doc. 2014–15291 Filed 6–27–14; 8:45 am]

BILLING CODE 6450–01–P

DEPARTMENT OF ENERGY

Wind and Water Power Technologies Office: Wind Energy Bat and Eagle Impact Minimization Technologies and Field Testing Opportunities

AGENCY: Office of Energy Efficiency and Renewable Energy, Department of Energy.

ACTION: Notice.

SUMMARY: The U.S. Department of Energy's Office of Energy Efficiency and Renewable Energy (EERE) invites public comment on its Request for Information (RFI) regarding a potential funding opportunity to advance the readiness of bat and eagle impact minimization technologies through investments in technology development and field testing.

DATES: Comments regarding the RFI must be received on or before July 25, 2014.

ADDRESSES: The complete RFI document is located at *https://eere-exchange.energy.gov/.*

FOR FURTHER INFORMATION CONTACT: Responses to the RFI and questions should be sent via email or email attachment to *WindMitigationRFI@ee.doe.gov.* Further guidance can be found in the RFI document posted on EERE Exchange.

SUPPLEMENTARY INFORMATION: The mission of the Wind and Water Power Technology Office of DOE's Office of Energy Efficiency and Renewable Energy is to accelerate widespread U.S. deployment of clean, affordable, and reliable wind power to promote energy security, economic growth, and environmental quality. Pursuant to this mission, the Office funds research and development to address market barriers that affect the deployment of wind energy, including the effects of wind on wildlife. In permitting wind facilities and complying with state and federal laws protecting wildlife, such as the Endangered Species Act, Migratory Bird Treaty Act, and Bald and Golden Eagle Protection Act, developers and operators of wind energy facilities often must take measures to mitigate the potential impacts of their facilities on protected species.

While guidelines exist for siting wind facilities in the landscape and wind turbines within a facility to avoid impacts to wildlife, technologies to minimize impacts at operational facilities are for most species either in early stages of development or simply do not exist. Research in this area is on-going, but significant advancements are needed to address the siting and permitting challenges currently faced by the wind industry.

In its RFI, EERE requests comments, information, and recommendations on the current state of wildlife impact minimization technologies, conditions under which technology vendors or developers would consider participating in a demonstration and validation campaign, and the conditions under which wind farm owner/operators would consider participating in a campaign to demonstrate, field-test, and validate such technologies. Additionally, EERE seeks input on a proposed framework for funding the advancement of wildlife impact minimization technologies aimed at reducing impacts to bats, eagles and other wildlife of concern, and on how to prioritize funding for research within this framework. The RFI is available at: *https://eere-exchange.energy.gov/.*

Issued in Washington, DC, on 24 June 2014.

Jose Zayas,

Director, Wind and Water Power Technologies Office, Energy Efficiency and Renewable Energy.

[FR Doc. 2014–15258 Filed 6–27–14; 8:45 am]

BILLING CODE 6450–01–P

DEPARTMENT OF ENERGY

Bonneville Power Administration

[BPA File No.: PNCA–14]

Proposed Changes to the Interchange Energy Imbalances Rate Under the Pacific Northwest Coordination Agreement (PNCA)

AGENCY: Bonneville Power Administration (BPA or Bonneville), Department of Energy (DOE).

ACTIONS: Notice of Proposed Adjustment to Interchange Energy Imbalances Rate under the Pacific Northwest Coordination Agreement (PNCA).

SUMMARY: BPA is holding this proceeding, Docket No. PNCA–14, to establish a new Interchange Energy Imbalances rate under the PNCA.

The Pacific Northwest Electric Power Planning and Conservation Act (Northwest Power Act) provides that BPA must establish and periodically review and revise its rates so that they are adequate to recover, in accordance with sound business principles, the costs associated with the acquisition, conservation, and transmission of electric power, including amortization of the Federal investment in the Federal Columbia River Power System (FCRPS) over a reasonable number of years and BPA's other costs and expenses. The Northwest Power Act also requires that BPA's rates be established based on the record of a formal hearing. By this notice, BPA announces the commencement of a rate adjustment proceeding for establishment of a new Interchange Energy Imbalances rate under the PNCA.

DATES: Anyone wishing to become a party to the PNCA–14 proceeding must provide written notice, via U.S. Mail or electronic mail, which must be received by BPA no later than 3:00 p.m. on July 10, 2014.

The PNCA–14 rate adjustment proceeding begins with a prehearing conference at 9:00 a.m. on July 9, 2014, in the BPA Rates Hearing Room, 1201 Lloyd Blvd., Suite 200, Portland, Oregon 97232.

Written comments by non-party participants must be received by August 15, 2014, to be considered in the Administrator's Record of Decision (ROD).

ADDRESSES: 1. Petitions to intervene should be directed to: Hearing Clerk—L–7, Bonneville Power Administration, 905 NE. 11th Avenue, Portland, Oregon 97232, or may be emailed to *rateclerk@bpa.gov.* In addition, copies of the petition must be served concurrently on BPA's General Counsel and directed to both Mr. Peter J. Burger, LP–7, Office of General Counsel, 905 NE. 11th Avenue, Portland, Oregon 97232, or via email to *pjburger@bpa.gov* (see section III.A. for more information regarding interventions).

2. Written comments by participants should be submitted to the Public Affairs Office, DKE–7, Bonneville Power Administration, P.O. Box 14428, Portland, Oregon 97293. Participants may also submit comments by email at: *www.bpa.gov/comment.* BPA requests that all comments and documents intended to be part of the Official Record in this rate proceeding contain the designation PNCA–14 in the subject line.

FOR FURTHER INFORMATION CONTACT: Ms. Heidi Y. Helwig, DKC–7, Supervisory Public Affairs Specialist, Bonneville Power Administration, P.O. Box 3621, Portland, Oregon 97208; by phone toll free at 1–800–622–4520; or via email to *hyhelwig@bpa.gov.* Responsible Officials: Mr. Robert Diffely, BPA's PNCA Representative, is the official responsible for the development of BPA's Interchange Energy rate.

SUPPLEMENTARY INFORMATION:

Table of Contents

Part I. Introduction and Procedural Background
Part II. Purpose and Scope of the PNCA–14 Rate Proceeding
Part III. Public Participation in BP–14
Part IV. Summary of Rate Proposals

Part I—Introduction and Procedural Background

Section 7(i) of the Northwest Power Act, 16 U.S.C. 839e(i), requires that BPA's rates be established according to certain procedures, including publication in the **Federal Register** of this notice of the proposed rates; one or more hearings conducted as expeditiously as practicable by a Hearing Officer; opportunity for both oral presentation and written submission of views, data, questions, and arguments related to the proposed rates; and a decision by the Administrator based on the record. BPA's rate proceedings are further governed by BPA's Procedures Governing Bonneville Power Administration Rate Hearings, 51 FR 7611 (March 5, 1986), which implement and expand the statutory requirements.

This proceeding is being conducted under the rule for Expedited Rate Proceedings, section 1010.10 of BPA's Procedures. BPA is proposing to use the Expedited Rate Proceedings because BPA is only proposing a change to the index used to price the balance of interchange energy between pairs of parties to the PNCA. The PNCA calls for the application of the Dow Jones Mid-C Index (Dow Jones Index) to price imbalance energy. The Dow Jones Index is no longer published and a replacement index needs to be identified for purposes of pricing the interchange energy. For this reason, the issues in this proceeding are anticipated to be very limited. Given these circumstances, BPA believes that a 90-day Expedited Rate Proceeding is sufficient to develop a full and complete record. If it is determined that additional time is required, the hearing officer may petition the Administrator for additional time as provided under Rule 1010.10(b). A proposed schedule for the proceeding is provided below. A final schedule will be established by the Hearing Officer at the prehearing conference.

BPA Direct Case—July 9, 2014
Prehearing Conference—July 9, 2014
Deadline to Intervene—July 10, 2014
Data Request Deadline—July 22, 2014
Data Response Deadline—July 29, 2014
Parties file Direct Case—August 1, 2014
Data Request Deadline—August 8, 2014
Data Response Deadline—August 15, 2014
Close of Participant Comments—August 15, 2014
Litigants file Rebuttal—August 25, 2014
Data Request Deadline—September 2, 2014
Data Response Deadline—September 9, 2014
Cross-Examination—September 12, 2014
Initial Briefs Filed—September 19, 2014
Briefs on Exceptions—September 26, 2014
Final ROD—Final Studies—October 8, 2014

Section 1010.7 of BPA's Procedures prohibits *ex parte* communications. The *ex parte* rule applies to all BPA and DOE employees and contractors. Except as provided below, any outside communications with BPA and/or DOE personnel regarding the merits of any issue in BPA's rate proceeding by other Executive Branch agencies, Congress, existing or potential BPA customers (including tribes), or nonprofit or public interest groups are considered outside communications and are subject to the

ex parte rule. The rule does not apply to communications relating to: (1) Matters of procedure only (the status of the rate proceeding, for example); (2) exchanges of data in the course of business or under the Freedom of Information Act; (3) requests for factual information; (4) matters for which BPA is responsible under statutes other than the ratemaking provisions; or (5) matters which all parties agree may be made on an *ex parte* basis. The *ex parte* rule remains in effect until the Administrator's Final ROD is issued, which is scheduled to occur on or about October 8, 2014.

Part II—Purpose and Scope of the PNCA–14 Rate Proceeding

A. Circumstances Necessitating the Proposed Change

In PNCA–02, BPA established a rate for Interchange Energy under the PNCA contract. The PNCA–02 proceeding adopted a rate that was linked to a market index. The Dow Jones Mid-Columbia Firm index was chosen as the index for pricing the energy. The sole purpose of this proceeding is to propose a replacement for the index used to price the balance of interchange energy exchanged between pairs of parties to the PNCA. Dow Jones ceased publication of the Dow Jones Mid-C Index in 2013 so currently there is no index to price this energy. BPA is proposing to substitute the Intercontinental Exchange Mid-C Index for the Dow Jones index. In addition to replacing the Dow Jones Index, BPA is also proposing to place a floor of $0.00/MWh for energy provided for the Interchange Energy imbalances. The purpose of the floor is to avoid having a PNCA party pay another PNCA party when it provides Interchange Energy during periods when Intercontinental Exchange has negative prices.

B. Scope

The scope of this proceeding is limited to the appropriateness of substituting the Intercontinental Exchange as the index used to price the energy and the additional proposal to place a floor on the index price of $0.00/MWh. Pursuant to § 1010.3(f) of BPA's Procedures, the Administrator hereby directs the Hearing Officer to exclude from the record all argument, testimony, or other evidence that seeks in any way to address matters outside of these two issues.

C. The National Environmental Policy Act (NEPA)

BPA is in the process of assessing the potential environmental effects of its proposal, consistent with NEPA. A preliminary review of the proposal indicates that it involves solely administrative and financial matters that appear to fall within a class of actions that are categorically excluded from further NEPA review pursuant to applicable NEPA regulations. Comments regarding the potential environmental effects of the proposal may be submitted to Katherine S. Pierce, NEPA Compliance Officer, KEC–4, Bonneville Power Administration, 905 NE. 11th Avenue, Portland, OR 97232. Any such comments received by the comment deadline for Participant Comments identified in section III.A. below will be considered by BPA's NEPA compliance staff in the NEPA process that will be conducted for this proposal.

Part III—Public Participation in BP–14

A. Distinguishing Between ''Participants'' and ''Parties''

BPA distinguishes between ''participants in'' and ''parties to'' the hearings. Apart from the formal hearing process, BPA will receive written comments, views, opinions, and information from ''participants,'' who may submit comments without being subject to the duties of, or having the privileges of, parties. Participants' written comments will be made part of the official record and considered by the Administrator. Participants are not entitled to take part in the prehearing conference; may not cross-examine parties' witnesses, seek discovery, or serve or be served with documents; and are not subject to the same procedural requirements as parties. BPA customers whose rates are subject to this proceeding, or their affiliated customer groups, may not submit participant comments. Members or employees of organizations that have intervened in the rate proceeding may submit general comments as participants but may not use the comment procedures to address specific issues raised by their intervenor organizations.

Written comments by participants will be included in the record if they are received by August 15, 2014. Written views, supporting information, questions, and arguments should be submitted to the address listed in the **ADDRESSES** section of this notice.

Entities or persons become parties to the proceeding by filing petitions to intervene, which must state the name and address of the entity or person requesting party status and the entity's or person's interest in the hearing. BPA customers and affiliated customer groups will be granted intervention based on petitions filed in conformance with BPA's Procedures. Other petitioners must explain their interests in sufficient detail to permit the Hearing Officer to determine whether the petitioners have a relevant interest in the hearing. Pursuant to Rule 1010.1(d) of BPA's Procedures, BPA waives the requirement in Rule 1010.4(d) that an opposition to an intervention petition be filed and served 24 hours before the prehearing conference. The time limit for opposing a timely intervention will be established at the prehearing conference. Any party, including BPA, may oppose a petition for intervention. All petitions will be ruled on by the Hearing Officer. Late interventions are strongly disfavored. Opposition to an untimely petition to intervene must be filed and received by BPA within two days after service of the petition.

B. Developing the Record

The hearing record will include, among other things, the transcripts of the hearing, written evidence and argument entered into the record by BPA and the parties, written comments from participants, and other material accepted into the record by the Hearing Officer. The Hearing Officer will review the record and certify the record to the Administrator for final decision.

The Administrator will make a decision on the modification to the PNCA Interchange Energy rate based on the record and such other materials and information as may have been submitted to or developed by the Administrator. The Administrator will serve copies of the Final ROD on all parties. BPA will file its rates with the Commission for confirmation and approval after issuance of the Final ROD.

Part IV—Summary of Rate Proposal

A. Initial Deliveries of IE

This charge applies to IE delivered from BPA to another PNCA party.

Formula 1

$$C = (ID_{ON} * I_{ON}) + (ID_{OFF} * I_{OFF})$$

Where for each day

C = Daily charge for Initial Deliveries of ID in Dollars

ID_{ON} = The Initial Deliveries of IE made during the day during On Peak hours.

I_{ON} = The Intercontinental Exchange Mid-C index for On Peak hours in dollars per megawatt hour, but I_{ON} shall not be less than $0.00 per megawatt hour.

ID_{OFF} = The Initial Deliveries of IE made during the day during Off Peak hours.

I_{OFF} = The Intercontinental Exchange Mid-C index for Off Peak hours in dollars per megawatt hour, but I_{ON} shall not be less than $0.00 per megawatt hour.

Initial Deliveries of IE on Sunday or a NERC (or its successor organization(s))

recognized holidays are priced at the Off Peak rate.

B. Return of IE

This charge applies to the return of ID that was initially delivered to BPA from another PNCA party. The charge is as follows:

Formula 2

$C_{PARTY} = IER_{PARTY} * R_{PARTY}$

Where for each PNCA Party for a given day:

C_{PARTY} = Daily charge for the return of such PNCA party's IE in dollars

IER_{PARTY} = The quantity of IE returned to a PNCA party on a day in megawatt hours

R_{PARTY} = the applicable IE return rate for the PNCA party for the given day as calculated in in Formula 3 below in dollars per megawatt hour.

Formula 3

$R_{PARTY} = \Sigma C_{PARTY} \div \Sigma IER_{PARTY}$

Where for each PNCA Party for a given day:

R_{PARTY} = the IE return rate calculated for the PNCA party as of the given day in dollars per megawatt hours.

ΣC_{PARTY} = all payments received by BPA from such PNCA party from the date of the last cash out of IE Imbalances to the date BPA returns the ID, in dollars

ΣIER_{PARTY} = the net of all IE BPA has received from such PNCA party and the IE returned by BPA to such PNCA party from the date of the last cash out of IE Imbalances to the date BPA returns the IE, in megawatt hours.

Issued this 19th day of June 2014.

Elliot E. Mainzer,

Administrator and Chief Executive Officer.

[FR Doc. 2014–15272 Filed 6–27–14; 8:45 am]

BILLING CODE 6450–01–P

DEPARTMENT OF ENERGY

Federal Energy Regulatory Commission

[Docket No. CP14–501–000]

National Fuel Gas Supply Corporation; Notice of Application

Take notice that on June 13, 2014, National Fuel Gas Supply Corporation (National Fuel), 6363 Main Street, Williamsville, New York 14221 filed an application in Docket No. CP14–501–000 pursuant to section 7(c) of the Natural Gas Act (NGA), and Part 157 of the Commission's regulations, for a certificate of public convenience and/or necessity requesting authorization to revise the reservoir and buffer boundaries of its adjacent Beech Hill, East Independence and West Independence Storage Fields in Alleghany and Steuben Counties, New York and that would extend the Beech Hill field into Potter County, Pennsylvania. The proposed expansions would increase the storage reservoir by 8,299.02 acres and the buffer area by 4,654.67 acres. Additionally, National Fuel requests authorization to convert Well 7451 from observation to withdrawal only status. National Fuel does not seek to change the certificated capacity or deliverability of the three fields, nor are there any new facilities proposed, all as more fully set forth in the application which is on file with the Commission and open for public inspection. The filing may also be viewed on the Web at *http://www.ferc.gov* using the ''eLibrary'' link. Enter the docket number excluding the last three digits in the docket number field to access the document. For assistance, contact FERC at *FERCOnlineSupport@ferc.gov* or call toll-free, (866) 208–3676 or TTY, (202) 502–8659.

Any questions regarding this application may be directed to David W. Reitz, Deputy General Counsel, National Fuel Gas Supply Corporation, 6363 Main Street, Williamsville, New York 14221, or by calling 716–857–7949.

Pursuant to section 157.9 of the Commission's rules, 18 CFR 157.9, within 90 days of this Notice the Commission staff will either: Complete its environmental assessment (EA) and place it into the Commission's public record (eLibrary) for this proceeding; or issue a Notice of Schedule for Environmental Review. If a Notice of Schedule for Environmental Review is issued, it will indicate, among other milestones, the anticipated date for the Commission staff's issuance of the final environmental impact statement (FEIS) or EA for this proposal. The filing of the EA in the Commission's public record for this proceeding or the issuance of a Notice of Schedule for Environmental Review will serve to notify federal and state agencies of the timing for the completion of all necessary reviews, and the subsequent need to complete all federal authorizations within 90 days of the date of issuance of the Commission staff's FEIS or EA.

There are two ways to become involved in the Commission's review of this project. First, any person wishing to obtain legal status by becoming a party to the proceedings for this project should, on or before the comment date stated below, file with the Federal Energy Regulatory Commission, 888 First Street NE., Washington, DC 20426, a motion to intervene in accordance with the requirements of the Commission's Rules of Practice and Procedure (18 CFR 385.214 or 385.211) and the Regulations under the NGA (18 CFR 157.10). A person obtaining party status will be placed on the service list maintained by the Secretary of the Commission and will receive copies of all documents filed by the applicant and by all other parties. A party must submit 7 copies of filings made with the Commission and must mail a copy to the applicant and to every other party in the proceeding. Only parties to the proceeding can ask for court review of Commission orders in the proceeding.

However, a person does not have to intervene in order to have comments considered. The second way to participate is by filing with the Secretary of the Commission, as soon as possible, an original and two copies of comments in support of or in opposition to this project. The Commission will consider these comments in determining the appropriate action to be taken, but the filing of a comment alone will not serve to make the filer a party to the proceeding. The Commission's rules require that persons filing comments in opposition to the project provide copies of their protests only to the party or parties directly involved in the protest.

Persons who wish to comment only on the environmental review of this project should submit an original and two copies of their comments to the Secretary of the Commission. Environmental commenter's will be placed on the Commission's environmental mailing list, will receive copies of the environmental documents, and will be notified of meetings associated with he Commission's environmental review process. Environmental commenter's will not be required to serve copies of filed documents on all other parties. However, the non-party commentary, will not receive copies of all documents filed by other parties or issued by the Commission (except for the mailing of environmental documents issued by the Commission) and ill not have the right to seek court review of the Commission's final order.

The Commission strongly encourages electronic filings of comments, protests and interventions in lieu of paper using the ''eFiling'' link at *http://www.ferc.gov*. Persons unable to file electronically should submit an original and 5 copies of the protest or intervention to the Federal Energy Regulatory Commission, 888 First Street NE., Washington, DC 20426. See, 18 CFR 385.2001(a)(1)(iii) and the instructions on the Commission's Web site under the ''e-Filing'' link.

Comment Date: July 15, 2014.

Dated: June 24, 2014.

Kimberly D. Bose,

Secretary.

[FR Doc. 2014–15218 Filed 6–27–14; 8:45 am]

BILLING CODE 6717–01–P

DEPARTMENT OF ENERGY

Federal Energy Regulatory Commission

Combined Notice of Filings #2

Take notice that the Commission received the following electric corporate filings:

Docket Numbers: EC14–106–000.
Applicants: CPV Maryland, LLC.
Description: Application for Authorization Under Section 203 of the Federal Power Act and Request for Waivers and Expedited Action of CPV Maryland, LLC.
Filed Date: 6/20/14.
Accession Number: 20140620–5103.
Comments Due: 5 p.m. ET 7/11/14.

Take notice that the Commission received the following electric rate filings:

Docket Numbers: ER10–2881–013; ER10–2882–013; ER10–2883–013; ER10–2884–013; ER10–2885–013; ER10–2641–013; ER10–2663–013; ER10–2886–013; ER13–1101–008; ER13–1541–007; ER14–787–001.
Applicants: Alabama Power Company.
Description: Notification of Non-Material of Change in Status of Alabama Power Company, et al.
Filed Date: 6/20/14.
Accession Number: 20140620–5087.
Comments Due: 5 p.m. ET 7/11/14.

Docket Numbers: ER13–1653–001.
Applicants: FirstEnergy Solutions Corp.
Description: Authorization for Affiliate Sales to be effective 6/1/2014.
Filed Date: 6/20/14.
Accession Number: 20140620–5093.
Comments Due: 5 p.m. ET 7/11/14.

Docket Numbers: ER14–2232–000.
Applicants: Capital Energy LLC.
Description: Baseline new to be effective 6/21/2014.
Filed Date: 6/20/14.
Accession Number: 20140620–5066.
Comments Due: 5 p.m. ET 7/11/14.

Docket Numbers: ER14–2233–000.
Applicants: Michigan Electric Transmission Company, LLC.
Description: Filing of a Certificate of Concurrence to be effective 6/13/2014.
Filed Date: 6/20/14.
Accession Number: 20140620–5069.
Comments Due: 5 p.m. ET 7/11/14.

Docket Numbers: ER14–2234–000.
Applicants: Kentucky Utilities Company.
Description: BREC 2nd Amd and Restated IA to be effective 8/20/2014.
Filed Date: 6/20/14.
Accession Number: 20140620–5072.
Comments Due: 5 p.m. ET 7/11/14.

Docket Numbers: ER14–2235–000.
Applicants: Midcontinent Independent System Operator, Inc., Ameren Illinois Company.
Description: 2014–06–20_SA 2005 Ameren-Hoosier WDS Amend Agr to be effective 9/1/2013.
Filed Date: 6/20/14.
Accession Number: 20140620–5080.
Comments Due: 5 p.m. ET 7/11/14.

Docket Numbers: ER14–2236–000.
Applicants: PJM Interconnection, L.L.C., New York Independent System Operator, Inc.
Description: PJM NYISO joint filing re: Coordinated Transaction Scheduling w/PJM Schedule A to be effective 12/31/9998.
Filed Date: 6/20/14.
Accession Number: 20140620–5106.
Comments Due: 5 p.m. ET 7/11/14.

Docket Numbers: ER14–2237–000.
Applicants: Midcontinent Independent System Operator, Inc.
Description: 2014–06–20_SA 2662 MidAm Amended GIA (J274) to be effective 6/21/2014.
Filed Date: 6/20/14.
Accession Number: 20140620–5113.
Comments Due: 5 p.m. ET 7/11/14.

Take notice that the Commission received the following open access transmission tariff filings:

Docket Numbers: OA08–14–000.
Applicants: Midwest Independent Transmission System, Inc.
Description: Annual Compliance Report as Required by Order No. 890–A of Midcontinent Independent System Operator, Inc.
Filed Date: 5/30/14.
Accession Number: 20140530–5481.
Comments Due: 5 p.m. ET 7/11/14.

The filings are accessible in the Commission's eLibrary system by clicking on the links or querying the docket number.

Any person desiring to intervene or protest in any of the above proceedings must file in accordance with Rules 211 and 214 of the Commission's Regulations (18 CFR 385.211 and 385.214) on or before 5:00 p.m. Eastern time on the specified comment date. Protests may be considered, but intervention is necessary to become a party to the proceeding.

eFiling is encouraged. More detailed information relating to filing requirements, interventions, protests, service, and qualifying facilities filings can be found at: *http://www.ferc.gov/docs-filing/efiling/filing-req.pdf.* For other information, call (866) 208–3676 (toll free). For TTY, call (202) 502–8659.

Dated: June 20, 2014.

Nathaniel J. Davis, Sr.,

Deputy Secretary.

[FR Doc. 2014–15183 Filed 6–27–14; 8:45 am]

BILLING CODE 6717–01–P

DEPARTMENT OF ENERGY

Federal Energy Regulatory Commission

Combined Notice of Filings

June 13, 2014.

Take notice that the Commission has received the following Natural Gas Pipeline Rate and Refund Report filings:

Filing Instituting Proceedings

Docket Numbers: RP14–1045–000.

Applicants: Algonquin Gas Transmission, LLC.

Description: Negotiated Rate Agreements Cleanup Jun2014 to be effective 7/12/2014.

Filed Date: 6/12/14.

Accession Number: 20140612–5048.

Comments Due: 5 p.m. ET 6/24/14.

Any person desiring to intervene or protest in any of the above proceedings must file in accordance with Rules 211 and 214 of the Commission's Regulations (18 CFR 385.211 and 385.214) on or before 5:00 p.m. Eastern time on the specified comment date. Protests may be considered, but intervention is necessary to become a party to the proceeding.

The filings are accessible in the Commission's eLibrary system by clicking on the links or querying the docket number.

eFiling is encouraged. More detailed information relating to filing requirements, interventions, protests, service, and qualifying facilities filings can be found at: *http://www.ferc.gov/docs-filing/efiling/filing-req.pdf.* For other information, call (866) 208–3676 (toll free). For TTY, call (202) 502–8659.

Nathaniel J. Davis, Sr.,

Deputy Secretary.

[FR Doc. 2014–15184 Filed 6–27–14; 8:45 am]

BILLING CODE 6717–01–P

DEPARTMENT OF ENERGY

Federal Energy Regulatory Commission

Combined Notice of Filings #1

Take notice that the Commission received the following electric corporate filings:

Docket Numbers: EC14–83–000.
Applicants: Nevada Power Company, Nevada Sun-Peak Limited Partnership.
Description: Clarification to May 2, 2014 Nevada Power Company and Nevada Sun-Peak Limited Partnership Section 203 Application.
Filed Date: 6/19/14.
Accession Number: 20140619–5140.
Comments Due: 5 p.m. ET 6/30/14.

Take notice that the Commission received the following exempt wholesale generator filings:

Docket Numbers: EG14–67–000.
Applicants: RE Astoria LLC.
Description: Notice of Self-Certification of Exempt Wholesale Generator Status of RE Astoria LLC.
Filed Date: 6/19/14.
Accession Number: 20140619–5115.
Comments Due: 5 p.m. ET 7/10/14.

Docket Numbers: EG14–68–000.
Applicants: RE Astoria 2 LLC.
Description: Notice of Self-Certification of Exempt Wholesale Generator Status of RE Astoria 2 LLC.
Filed Date: 6/19/14.
Accession Number: 20140619–5128
Comments Due: 5 p.m. ET 7/10/14.

Docket Numbers: EG14–69–000.
Applicants: Ector County Energy Center LLC.
Description: Notice of Self-Certification of Exempt Wholesale Generator Status of Ector County Energy Center LLC.
Filed Date: 6/20/14.
Accession Number: 20140620–5020.
Comments Due: 5 p.m. ET 7/11/14.

Take notice that the Commission received the following electric rate filings:

Docket Numbers: ER14–2087–002.
Applicants: Appalachian Power Company.
Description: OATT—CORRECTED Revise Attachment K, TCC Rate Update to be effective 12/31/9998.
Filed Date: 6/19/14.
Accession Number: 20140619–5105.
Comments Due: 5 p.m. ET 7/10/14.

Docket Numbers: ER14–2225–000.
Applicants: California Independent System Operator Corporation.
Description: 2014–06–19 GIDAP Reassessment Initiative to be effective 9/1/2014.
Filed Date: 6/19/14.
Accession Number: 20140619–5103.
Comments Due: 5 p.m. ET 7/10/14.

Docket Numbers: ER14–2226–000.
Applicants: Southwest Power Pool, Inc.
Description: 2891 AECC and Entergy Arkansas Attachment AO to be effective 6/1/2014.
Filed Date: 6/20/14.
Accession Number: 20140620–5029.
Comments Due: 5 p.m. ET 7/11/14.

Docket Numbers: ER14–2227–000.
Applicants: El Paso Electric Company.
Description: Housekeeping Updates—MBR to be effective 8/19/2014.
Filed Date: 6/20/14.
Accession Number: 20140620–5032.
Comments Due: 5 p.m. ET 7/11/14.

Docket Numbers: ER14–2228–000.
Applicants: Broad River Energy LLC.
Description: Normal Correct Format to be effective 6/21/2014.
Filed Date: 6/20/14.
Accession Number: 20140620–5033.
Comments Due: 5 p.m. ET 7/11/14.

Docket Numbers: ER14–2229–000.
Applicants: Southwest Power Pool, Inc.
Description: Notice of Cancellation of KCPL–GMA Firm Point-To-Point Transmission Service Agreement SA 1797 of Southwest Power Pool, Inc.
Filed Date: 6/20/14.
Accession Number: 20140620–5037.
Comments Due: 5 p.m. ET 7/11/14.

Docket Numbers: ER14–2230–000.
Applicants: Southwest Power Pool, Inc.
Description: Notice of Cancellation of Midwest Energy Firm Point-To-Point Transmission Service Agreement SA 1874 of Southwest Power Pool, Inc.
Filed Date: 6/20/14.
Accession Number: 20140620–5041.
Comments Due: 5 p.m. ET 7/11/14.

Docket Numbers: ER14–2231–000.
Applicants: Southwest Power Pool, Inc.
Description: Notice of Cancellation of KCPL Firm Point-To-Point Transmission Service Agreement SA 1796 of Southwest Power Pool, Inc.
Filed Date: 6/20/14.
Accession Number: 20140620–5052.
Comments Due: 5 p.m. ET 7/11/14.

Take notice that the Commission received the following electric securities filings:

Docket Numbers: ES14–43–000.
Applicants: Indianapolis Power & Light Company.
Description: Amendment to June 5, 2014 Application of Indianapolis Power & Light Company under FPA Section 204 for an Order Authorizing the Issuance of Short-Term Debt Instruments.
Filed Date: 6/19/14.
Accession Number: 20140619–5125.
Comments Due: 5 p.m. ET 6/30/14.

Take notice that the Commission received the following foreign utility company status filings:

Docket Numbers: FC14–15–000.
Applicants: East Durham Wind, LP.
Description: Notification of Self-Certification of Foreign Utility Company Status of East Durham Wind, LP.
Filed Date: 6/19/14.
Accession Number: 20140619–5101.
Comments Due: 5 p.m. ET 7/10/14.

The filings are accessible in the Commission's eLibrary system by clicking on the links or querying the docket number.

Any person desiring to intervene or protest in any of the above proceedings must file in accordance with Rules 211 and 214 of the Commission's Regulations (18 CFR 385.211 and 385.214) on or before 5:00 p.m. Eastern time on the specified comment date. Protests may be considered, but intervention is necessary to become a party to the proceeding.

eFiling is encouraged. More detailed information relating to filing requirements, interventions, protests, service, and qualifying facilities filings can be found at: *http://www.ferc.gov/docs-filing/efiling/filing-req.pdf.* For other information, call (866) 208–3676 (toll free). For TTY, call (202) 502–8659.

Dated: June 20, 2014.

Nathaniel J. Davis, Sr.,

Deputy Secretary.

[FR Doc. 2014–15182 Filed 6–27–14; 8:45 am]

BILLING CODE 6717–01–P

DEPARTMENT OF ENERGY

Federal Energy Regulatory Commission

[Docket No. EL14–70–000]

Indianapolis Power and Light Company v. Midcontinent Independent System Operator, Inc.; Notice of Complaint

Take notice that on June 20, 2014, pursuant to Rules 207(a)(5) and 206 of the Federal Energy Regulatory Commission's (Commission) Rules of Practice and Procedure, 18 CFR 385.207(a)(5) and 385.206 and section 206 of the Federal Power Act, 16 U.S.C. 824(e), Indianapolis Power and Light Company (Complainant) filed a request for a waiver of certain provisions of the Midcontinent Independent System Operator's (Respondent) Open Accession Transmission, Energy and Operating Reserve Markets Tariff (Tariff)

or, in the alternative, a complaint alleging that certain requirements of the Respondent's Tariff that fail to address specific circumstances resulting from compliance with the United States Environmental Protection Agency Mercury and Air Toxic Standards are unjust and unreasonable.

The Complainant certifies that copies of the complaint were served on the contacts for the Respondent as listed on the Commission's list of Corporate Officials.

Any person desiring to intervene or to protest this filing must file in accordance with Rules 211 and 214 of the Commission's Rules of Practice and Procedure (18 CFR 385.211, 385.214). Protests will be considered by the Commission in determining the appropriate action to be taken, but will not serve to make protestants parties to the proceeding. Any person wishing to become a party must file a notice of intervention or motion to intervene, as appropriate. The Respondent's answer and all interventions, or protests must be filed on or before the comment date. The Respondent's answer, motions to intervene, and protests must be served on the Complainants.

The Commission encourages electronic submission of protests and interventions in lieu of paper using the ''eFiling'' link at *http://www.ferc.gov.* Persons unable to file electronically should submit an original and 5 copies of the protest or intervention to the Federal Energy Regulatory Commission, 888 First Street NE., Washington, DC 20426.

This filing is accessible on-line at *http://www.ferc.gov,* using the ''eLibrary'' link and is available for review in the Commission's Public Reference Room in Washington, DC. There is an ''eSubscription'' link on the Web site that enables subscribers to receive email notification when a document is added to a subscribed docket(s). For assistance with any FERC Online service, please email *FERC OnlineSupport@ferc.gov,* or call (866) 208–3676 (toll free). For TTY, call (202) 502–8659.

Comment Date: 5:00 p.m. Eastern Time on July 10, 2014.

Dated: June 24, 2014.

Kimberly D. Bose,

Secretary.

[FR Doc. 2014–15219 Filed 6–27–14; 8:45 am]

BILLING CODE 6717–01–P

DEPARTMENT OF ENERGY

Federal Energy Regulatory Commission

[Project No. 3586–004]

Hoosier Hydroelectric, Inc. Rocky River Hydro, LLC; Notice of Transfer of Exemption

1. By letter filed May 16, 2014, Rocky River Hydro, LLC informed the Commission that the exemption from licensing for the Rocky River Hydroelectric Project, FERC No. 3586, originally issued December 16, 1981,[1] has been transferred to Rocky River Hydro, LLC. The project is located on the Rocky River in Chatham County, North Carolina. The transfer of an exemption does not require Commission approval.

2. Rocky River Hydro, LLC, located at 3409 Birk Bluff Court, Cary, NC 27518 is now the exemptee of the Rocky River Hydroelectric Project, FERC No. 3586.

Dated: Issued June 24, 2014.

Kimberly D. Bose,

Secretary.

[FR Doc. 2014–15220 Filed 6–27–14; 8:45 am]

BILLING CODE 6717–01–P

DEPARTMENT OF ENERGY

Federal Energy Regulatory Commission

[Project No. 4608–006]

Richard Kaster, BC Hydro, LLC; Notice of Transfer of Exemption

1. By letter filed April 23, 2014, Richard Kaster informed the Commission that the exemption from licensing for the Kaster Riverview Project, FERC No. 4608, originally issued February 26, 1982,[1] has been transferred to BC Hydro, LLC. The project is located on Box Canyon Springs in Twin Falls County, Idaho. The transfer of an exemption does not require Commission approval.

2. BC Hydro, LLC is now the exemptee of the Kaster Riverview Project, FERC No. 4608. All correspondence should be forwarded to: Mr. Scott Kaster, Hydro Plus, 4580 Clear Lakes Rd., Buhl, ID 83316, and Mr. Rick Kaster, Energy Systems, 208 Sunny Hill Circle, Twin Falls, ID 83301.

[1] 17 FERC ¶ 62,442, Order Granting Exemption from Licensing of a Small Hydroelectric Project of 5 Megawatts or Less.

[1] 18 FERC ¶ 62,320, Order Granting Exemption From Licensing of a Small Hydroelectric Project of 5 Megawatts or Less.

Dated: June 24, 2014.

Kimberly D. Bose,

Secretary.

[FR Doc. 2014–15221 Filed 6–27–14; 8:45 am]

BILLING CODE 6717–01–P

DEPARTMENT OF ENERGY

Federal Energy Regulatory Commission

Combined Notice of Filings #1

Take notice that the Commission received the following electric rate filings:

Docket Numbers: ER10–2633–016; ER10–2718–017; ER10–2719–017; ER10–2717–016; ER13–55–006.

Applicants: Birchwood Power Partners, L.P., Cogen Technologies Linden Venture, L.P., East Coast Power Linden Holding, L.L.C., EFS Parlin Holdings, LLC, Homer City Generation, L.P.

Description: Triennial Market Power Analysis of Birchwood Power Partners, L.P., et al.

Filed Date: 6/23/14.

Accession Number: 20140623–5056.

Comments Due: 5 p.m. ET 8/22/14.

Docket Numbers: ER10–3124–003; ER10–3129–003; ER10–3130–003; ER10–3132–003; ER10–3314–001; ER10–3137–003.

Applicants: Noble Altona Windpark, LLC, Noble Bliss Windpark, LLC, Noble Chateaugay Windpark, LLC, Noble Clinton Windpark I, LLC, Noble Ellenburg Windpark, LLC, Noble Wethersfield Windpark, LLC.

Description: Triennial Market Power Analysis of Noble Altona Windpark, LLC, et al.

Filed Date: 6/23/14.

Accession Number: 20140623–5067.

Comments Due: 5 p.m. ET 8/22/14.

Docket Numbers: ER11–4055–003; ER12–1470–003; ER10–2977–003; ER14–474–001; ER10–1290–004; ER10–3026–003.

Applicants: Copper Mountain Solar 1, LLC, Energia Sierra Juarez U.S., LLC, Mesquite Power, LLC, Sempra Generation, LLC, San Diego Gas & Electric Company, Termoelectrica U.S. LLC.

Description: Notice of Non-Material Change in Status of Copper Mountain Solar 1, LLC, et. al.

Filed Date: 6/23/14.

Accession Number: 20140623–5061.

Comments Due: 5 p.m. ET 7/14/14.

Docket Numbers: ER12–1436–007; ER14–152–002; ER13–1793–004; ER10–3099–009; ER12–1260–006; ER10–2329–004.

Applicants: Eagle Point Power Generation LLC, Elgin Energy Center,

LLC, Hazle Spindle, LLC, RC Cape May Holdings, LLC, Stephentown Spindle, LLC, Vineland Energy LLC.

Description: Triennial Market-Based Rate Update Filing for the Northeast Region and Notice of Non-Material Change in Status of the Rockland Seller.

Filed Date: 6/23/14.

Accession Number: 20140623–5074.

Comments Due: 5 p.m. ET 8/22/14.

Docket Numbers: ER13–2477–004; ER11–3859–009; ER13–2476–004; ER11–3861–008; ER11–3864–009; ER13–2475–004; ER11–3866–009; ER12–192–007; ER11–3867–009; ER11–3857–009; ER11–4266–008.

Applicants: Brayton Point Energy, LLC, Dighton Power, LLC, Elwood Energy, LLC, Empire Generating Co, LLC, EquiPower Resources Management, LLC, Kincaid Generation, L.L.C., Lake Road Generating Company, L.P., Liberty Electric Power, LLC, MASSPOWER, Milford Power Company, LLC, Richland-Stryker Generation LLC.

Description: Triennial Market Power Analysis of the ECP MBR Sellers, et al.

Filed Date: 6/23/14.

Accession Number: 20140623–5055.

Comments Due: 5 p.m. ET 8/22/14.

Docket Numbers: ER14–153–002; ER14–154–002; ER10–3300–007; ER13–2386–002; ER10–3143–013.

Applicants: Gibson City Energy Center, LLC, Grand Tower Energy Center, LLC, La Paloma Generating Company, LLC, Lakeswind Power Partners, LLC, Sabine Cogen, LP.

Description: Notice of Change in Status of the Rockland Sellers.

Filed Date: 6/23/14.

Accession Number: 20140623–5083.

Comments Due: 5 p.m. ET 7/14/14.

Docket Numbers: ER14–2238–000.

Applicants: Repsol Energy North America Corporation.

Description: Application for Market-Based Rate Authorization to be effective 8/19/2014.

Filed Date: 6/20/14.

Accession Number: 20140620–5137.

Comments Due: 5 p.m. ET 7/11/14.

Docket Numbers: ER14–2239–000.

Applicants: Pacific Gas and Electric Company.

Description: Vaca Dixon Non-conforming SGIA Service Agreement No 245 under the WDT to be effective 6/23/2014.

Filed Date: 6/20/14.

Accession Number: 20140620–5143.

Comments Due: 5 p.m. ET 7/11/14.

Docket Numbers: ER14–2240–000.

Applicants: Yasmin Partners LLC.

Description: Yasmin Partners LLC, FERC Electric Tariff to be effective 7/1/2014.

Filed Date: 6/23/14.

Accession Number: 20140623–5018.

Comments Due: 5 p.m. ET 7/14/14.

Docket Numbers: ER14–2241–000.

Applicants: Southern California Edison Company.

Description: Southern California Edison Company submits tariff filing per 35.15: Notices of Cancellation for SGIA & DistribServAgmt with SEPV Mission Creek, LLC to be effective 6/19/2014.

Filed Date: 6/23/14.

Accession Number: 20140623–5062.

Comments Due: 5 p.m. ET 7/14/14.

Docket Numbers: ER14–2242–000.

Applicants: Old Dominion Electric Cooperative, Inc.

Description: Petition for Waiver of PJM Tariff and Operating Agreement Provisions in Order to Make ODEC Whole for Certain January, 2014 Operations of Old Dominion Electric Cooperative.

Filed Date: 6/23/14.

Accession Number: 20140623–5065.

Comments Due: 5 p.m. ET 7/14/14.

Docket Numbers: ER14–2243–000.

Applicants: Deseret Generation & Transmission Co-operative, Inc.

Description: Deseret Generation & Transmission Co-operative, Inc. submits 2014 RIA Annual Update to be effective 1/1/2014.

Filed Date: 6/23/14.

Accession Number: 20140623–5076.

Comments Due: 5 p.m. ET 7/14/14.

Docket Numbers: ER14–2244–000.

Applicants: La Paloma Generating Company, LLC.

Description: La Paloma Generating Company, LLC submits Revised Market-Based Rate Tariff to be effective 8/22/2014.

Filed Date: 6/23/14.

Accession Number: 20140623–5096.

Comments Due: 5 p.m. ET 7/14/14.

The filings are accessible in the Commission's eLibrary system by clicking on the links or querying the docket number.

Any person desiring to intervene or protest in any of the above proceedings must file in accordance with Rules 211 and 214 of the Commission's Regulations (18 CFR 385.211 and 385.214) on or before 5:00 p.m. Eastern time on the specified comment date. Protests may be considered, but intervention is necessary to become a party to the proceeding.

eFiling is encouraged. More detailed information relating to filing requirements, interventions, protests, service, and qualifying facilities filings can be found at: *http://www.ferc.gov/docs-filing/efiling/filing-req.pdf.* For other information, call (866) 208–3676 (toll free). For TTY, call (202) 502–8659.

Dated: June 23, 2014.

Nathaniel J. Davis, Sr.,

Deputy Secretary.

[FR Doc. 2014–15226 Filed 6–27–14; 8:45 am]

BILLING CODE 6717–01–P

DEPARTMENT OF ENERGY

Federal Energy Regulatory Commission

[Docket No. RC11–6–004]

North American Electric Reliability Corporation; Notice of Filing

Take notice that on June 20, 2014, the North American Electric Reliability Corporation (NERC) submitted a compliance filing and report in accordance with the Federal Energy Regulatory Commission's Order (FERC or Commission) in *North American Electric Reliability Corporation,* 143 FERC ¶ 61,253 (2013) (One Year Report Order).

Any person desiring to intervene or to protest this filing must file in accordance with Rules 211 and 214 of the Commission's Rules of Practice and Procedure (18 CFR 385.211, 385.214). Protests will be considered by the Commission in determining the appropriate action to be taken, but will not serve to make protestants parties to the proceeding. Any person wishing to become a party must file a notice of intervention or motion to intervene, as appropriate. Such notices, motions, or protests must be filed on or before the comment date. On or before the comment date, it is not necessary to serve motions to intervene or protests on persons other than the Applicant.

The Commission encourages electronic submission of protests and interventions in lieu of paper using the ''eFiling'' link at *http://www.ferc.gov.* Persons unable to file electronically should submit an original and 5 copies of the protest or intervention to the Federal Energy Regulatory Commission, 888 First Street NE., Washington, DC 20426.

This filing is accessible on-line at *http://www.ferc.gov,* using the ''eLibrary'' link and is available for review in the Commission's Public Reference Room in Washington, DC. There is an ''eSubscription'' link on the Web site that enables subscribers to receive email notification when a document is added to a subscribed docket(s). For assistance with any FERC Online service, please email *FERC OnlineSupport@ferc.gov,* or call (866) 208–3676 (toll free). For TTY, call (202) 502–8659.

Comment Date: 5:00 p.m. Eastern Time on July 21, 2014.

Dated: June 24, 2014.

Kimberly D. Bose,

Secretary.

[FR Doc. 2014–15223 Filed 6–27–14; 8:45 am]

BILLING CODE 6717–01–P

DEPARTMENT OF ENERGY

Federal Energy Regulatory Commission

[Project No. 13570–002]

Warm Springs Irrigation District; Notice of Technical Meeting

a. *Project Name and Number:* Warm Springs Dam Hydroelectric Project No. 13570.

b. *Date:* July 10, 2014; 1:30 p.m. Eastern Time (11:30 a.m. Mountain Time).

c. *Place:* Telephone conference with the U.S. Bureau of Reclamation (Reclamation) and the Warm Springs Irrigation District.

d. *FERC Contact:* Ken Wilcox, *ken.wilcox@ferc.gov* or (202) 502–6835.

e. *Purpose of Meeting:* To discuss Reclamation's authority over the operation, maintenance, and management of the Warm Springs Dam and reservoir, relative to the proposed hydroelectric project.

f. A summary of the meeting will be prepared and filed for the project's record.

g. All local, state, and federal agencies, Indian tribes, and other interested parties are invited to participate by phone. Please contact Ken Wilcox at *ken.wilcox@ferc.gov* or (202) 502–6835 by close of business Tuesday, July 8, 2014, to RSVP and to receive specific instructions on how to participate.

Dated: June 24, 2014.

Kimberly D. Bose,

Secretary.

[FR Doc. 2014–15222 Filed 6–27–14; 8:45 am]

BILLING CODE 6717–01–P

ENVIRONMENTAL PROTECTION AGENCY

[EPA–HQ–OAR–2013–0146; FRL–9912–98–OAR]

Release of Integrated Review Plan for the Primary National Ambient Air Quality Standards for Oxides of Nitrogen

AGENCY: Environmental Protection Agency (EPA).

ACTION: Notice of Availability.

SUMMARY: The Environmental Protection Agency (EPA) is announcing the availability of a final document titled *Integrated Review Plan for the Primary National Ambient Air Quality Standards for Nitrogen Dioxide* (IRP). This document contains the plans for the review of the air quality criteria for health for oxides of nitrogen and the primary national ambient air quality standards (NAAQS) for nitrogen dioxide (NO_2). The primary NO_2 NAAQS provide for the protection of public health from exposure to oxides of nitrogen in ambient air.

DATES: The IRP will be available on or about June 30, 2014.

ADDRESSES: This document will be available primarily via the Internet at the following Web site: *http://www.epa.gov/ttn/naaqs/standards/nox/s_nox_2012_pd.html.*

FOR FURTHER INFORMATION CONTACT: Ms. Beth Hassett-Sipple, Office of Air Quality Planning and Standards (mail code C504–06), U.S. Environmental Protection Agency, Research Triangle Park, NC 27711; telephone number: 919–541–4605; fax number: 919–541–0237; email address: *hassett-sipple.beth@epa.gov.*

SUPPLEMENTARY INFORMATION: Two sections of the Clean Air Act (CAA) govern the establishment and revision of the NAAQS. Section 108 (42 U.S.C. 7408) directs the Administrator to identify and list certain air pollutants and then to issue air quality criteria for those pollutants. The Administrator is to list those air pollutants that in her ''judgment, cause or contribute to air pollution which may reasonably be anticipated to endanger public health or welfare;'' ''the presence of which in the ambient air results from numerous or diverse mobile or stationary sources;'' and ''for which . . . [the Administrator] plans to issue air quality criteria. . . . .'' Air quality criteria are intended to ''accurately reflect the latest scientific knowledge useful in indicating the kind and extent of all identifiable effects on public health or welfare which may be expected from the presence of [a] pollutant in the ambient air . . .'' 42 U.S.C. 7408(b). Under section 109 (42 U.S.C. 7409), the EPA establishes primary (health-based) and secondary (welfare-based) NAAQS for pollutants for which air quality criteria are issued. Section 109(d) requires periodic review and, if appropriate, revision of existing air quality criteria. The revised air quality criteria reflect advances in scientific knowledge on the effects of the pollutant on public health or welfare. The EPA is also required to periodically review and, if appropriate, revise the NAAQS based on the revised criteria. Section 109(d)(2) requires that an independent scientific review committee ''shall complete a review of the criteria . . . and the national primary and secondary ambient air quality standards . . . and shall recommend to the Administrator any new . . . standards and revisions of existing criteria and standards as may be appropriate . . . .'' Since the early 1980's, this independent review function has been performed by the Clean Air Scientific Advisory Committee (CASAC).

Presently, the EPA is reviewing the primary NAAQS for NO_2.[1] The final document, announced today, has been developed as part of the planning phase for the review. This phase began with a science policy workshop to identify issues and questions to frame the review.[2] Drawing from the workshop discussions, a draft IRP was prepared jointly by the EPA's National Center for Environmental Assessment, within the Office of Research and Development, and the EPA's Office of Air Quality Planning and Standards, within the Office of Air and Radiation (79 FR 7184, February 6, 2014).[3] The draft IRP was reviewed by CASAC at a meeting on March 12, 2014 (79 FR 8701, February 13, 2014). Comments from CASAC on the draft IRP were provided to the EPA in a June 10, 2014, letter (Frey, 2014).[4]

[1] The EPA's call for information for this review was issued on February 10, 2012 (77 FR 7149).

[2] The EPA held a workshop titled ''Kickoff Workshop to Inform EPA's Review of the Primary NO_2 NAAQS on February 29 to March 1, 2012 (77 FR 7149, February 10, 2012).

[3] The EPA released a draft plan for developing the Integrated Science Assessment (ISA) for CASAC consultation and public review (78 FR 26026, May 3, 2013). The EPA held a consultation with CASAC on this draft plan during a public teleconference on June 5, 2013 (78 FR 27234, May 10, 2013). Individual CASAC member comments were provided to the EPA in a letter from Dr. H. Christopher Frey, Chair, Clean Air Scientific Advisory Committee to the Honorable Bob Perciasepe, Acting Administrator, U.S. EPA, Consultation on the EPA's *Draft Plan for the Development of the Integrated Science Assessment for Nitrogen Oxides—Health Criteria (May 2013 Draft).* June 18, 2013. Available at: *http://yosemite.epa.gov/sab/sabproduct.nsf/264cb1227d55e02c85257402007446a4/08EF0A3789CDB13A85257B8E006A496E/$File/EPA–CASAC–13–006+unsigned.pdf.* CASAC and public comments on that draft plan were considered in developing Chapter 4 of the draft IRP.

[4] Letter from Dr. H. Christopher Frey, Chair, Clean Air Scientific Advisory Committee to the Honorable Gina McCarthy, Administrator, U.S. EPA. CASAC Review of the EPA's *Integrated Review Plan for the Primary National Ambient Air Quality Standards for Nitrogen Dioxide (External Review Draft)* (February 2014). June 10, 2014. Available at: *http://yosemite.epa.gov/sab/sabproduct.nsf/264cb1227d55e02c85257402007446a4/89989229944F36B085257CF300692E2A/$File/EPA–CASAC–14–001+unsigned.pdf.*

The final IRP includes consideration of CASAC and public comments received on the draft IRP. This document presents the current plan and specifies the schedule for the entire review, the process for conducting the review, and the key policy-relevant science issues that will guide the review.

Dated: June 19, 2014.

Mary Henigin,

Acting Director, Office of Air Quality Planning and Standards.

[FR Doc. 2014–15155 Filed 6–27–14; 8:45 am]

BILLING CODE 6560–50–P

EQUAL EMPLOYMENT OPPORTUNITY COMMISSION

Agency Information Collection Activities: Existing Collection

AGENCY: Equal Employment Opportunity Commission.

ACTION: Notice of Information Collection—Extension Without Change: Employer Information Report (EEO–1).

SUMMARY: In accordance with the Paperwork Reduction Act, the Equal Employment Opportunity Commission (EEOC or Commission) announces that it intends to submit to the Office of Management and Budget (OMB) a request for a three-year extension without change of the Employer Information Report (EEO–1).

DATES: Written comments on this notice must be submitted on or before August 29, 2014.

ADDRESSES: Comments should be sent to Bernadette Wilson, Acting Executive Officer, Executive Secretariat, Equal Employment Opportunity Commission, 131 M Street NE., Washington, DC 20507. As a convenience to commenters, the Executive Secretariat will accept comments totaling six or fewer pages by facsimile (''FAX'') machine. This limitation is necessary to assure access to the equipment. The telephone number of the fax receiver is (202) 663–4114. (This is not a toll-free number). Receipt of FAX transmittals will not be acknowledged, except that the sender may request confirmation of receipt by calling the Executive Secretariat staff at (202) 663–4070 (voice) or (202) 663–4074 (TTD). (These are not toll-free telephone numbers.) Instead of sending written comments to EEOC, you may submit comments and attachments electronically at *http://www.regulations.gov*, which is the Federal eRulemaking Portal. Follow the instructions online for submitting comments. All comments received through this portal will be posted without change, including any personal information you provide. Copies of comments submitted by the public to EEOC directly or through the Federal eRulemaking Portal will be available for review, by advance appointment only, at the Commission's library between the hours of 9:00 a.m. and 5 p.m. Eastern Time or can be reviewed at *http://www.regulations.gov*. To schedule an appointment to inspect the comments at EEOC's library, contact the library staff at (202) 663–4630 (voice) or (202) 663–4641 (TTY). (These are not toll-free numbers.)

FOR FURTHER INFORMATION CONTACT: Ronald Edwards, Director, Program Research and Surveys Division, Equal Employment Opportunity Commission, 131 M Street NE., Room 4SW30F, Washington, DC 20507; (202) 663–4958 (voice) or (202) 663–7063 (TTY).

SUPPLEMENTARY INFORMATION: Pursuant to the Paperwork Reduction Act of 1995 and OMB regulation 5 CFR 1320.8(d)(1), the Commission solicits public comment to enable it to:

(1) Evaluate whether the proposed collection of information is necessary for the proper performance of the Commission's functions, including whether the information will have practical utility;

(2) Evaluate the accuracy of the Commission's estimate of the burden of the proposed collection of information, including the validity of the methodology and assumptions used;

(3) Enhance the quality, utility, and clarity of the information to be collected; and

(4) Minimize the burden of the collection of information on those who are to respond, including the use of appropriate automated, electronic, mechanical, or other technological collection techniques or other forms of information technology, e.g., permitting electronic submission of responses.

Overview of Information Collection

Collection Title: Employer Information Report (EEO–1).

OMB Number: 3046–0007.

Frequency of Report: Annual.

Type of Respondent: Private employers with 100 or more employees and certain federal government contractors and first-tier subcontractors with 50 or more employees.

Description of Affected Public: Private employers with 100 or more employees and certain federal government contractors and first-tier subcontractors with 50 or more employees.

Reporting Hours: 987,394.

Respondent Cost: $11.4 million.

Federal Cost: $2.1 million.

Number of Forms: 1.

Abstract: Section 709(c) of Title VII of the Civil Rights Act of 1964, as amended, 42 U.S.C. 2000e–8(c), requires employers to make and keep records relevant to a determination of whether unlawful employment practices have been or are being committed, to preserve such records, and to produce reports as the Commission prescribes by regulation or order. Accordingly, the EEOC issued regulations prescribing the EEO–1 reporting requirement. Employers in the private sector with 100 or more employees and some federal contractors with 50 or more employees have been required to submit EEO–1 reports annually since 1966. The individual reports are confidential. EEO–1 data is used by EEOC to investigate charges of employment discrimination against employers in private industry and to provide information about the employment status of minorities and women. The data is shared with the Office of Federal Contract Compliance Programs (OFCCP), U.S. Department of Labor, and several other federal agencies. Pursuant to § 709(d) of Title VII of the Civil Rights Act of 1964, as amended, EEO–1 data is also shared with state and local Fair Employment Practices Agencies (FEPAs).

Burden Statement: The estimated number of respondents included in the annual EEO–1 survey is 70,000 private employers. The estimated number of establishment-based responses per reporting company is around four EEO–1 reports annually. The annual number of responses is approximately 290,410. The form is estimated to impose 987,394 burden hours annually. In order to help reduce survey burden, respondents are encouraged to report data electronically whenever possible.

Dated: June 24, 2014.

For the Commission.

Jacqueline A. Berrien,

Chair.

[FR Doc. 2014–15215 Filed 6–27–14; 8:45 am]

BILLING CODE 6570–01–P

FEDERAL COMMUNICATIONS COMMISSION

Information Collection Being Reviewed by the Federal Communications Commission Under Delegated Authority

AGENCY: Federal Communications Commission.

ACTION: Notice and request for comments.

SUMMARY: As part of its continuing effort to reduce paperwork burdens, and as required by the Paperwork Reduction Act (PRA) of 1995 (44 U.S.C. 3501–3520), the Federal Communication Commission (FCC or Commission) invites the general public and other Federal agencies to take this opportunity to comment on the following information collections. Comments are requested concerning: Whether the proposed collection of information is necessary for the proper performance of the functions of the Commission, including whether the information shall have practical utility; the accuracy of the Commission's burden estimate; ways to enhance the quality, utility, and clarity of the information collected; ways to minimize the burden of the collection of information on the respondents, including the use of automated collection techniques or other forms of information technology; and ways to further reduce the information collection burden on small business concerns with fewer than 25 employees.

The FCC may not conduct or sponsor a collection of information unless it displays a currently valid OMB control number. No person shall be subject to any penalty for failing to comply with a collection of information subject to the PRA that does not display a valid OMB control number.

DATES: Written PRA comments should be submitted on or before August 29, 2014. If you anticipate that you will be submitting comments, but find it difficult to do so within the period of time allowed by this notice, you should advise the contact listed below as soon as possible.

ADDRESSES: Direct all PRA comments to Cathy Williams, FCC, via email *PRA@fcc.gov<mailto:PRA@fcc.gov>* and to *Cathy.Williams@fcc.gov<mailto:Cathy.Williams@fcc.gov>.*

FOR FURTHER INFORMATION CONTACT: For additional information about the information collection, contact Cathy Williams at (202) 418–2918.

SUPPLEMENTARY INFORMATION:

OMB Control Number: 3060–0017.

Title: Application for a Low Power TV, TV Translator, or TV Booster Station License, FCC Form 347.

Form Number: FCC Form 347.

Type of Review: Extension of a currently approved collection.

Respondents: Business or other for-profit entities; State, local or Tribal Government.

Number of Respondents/Responses: 450 respondents and 450 responses.

Estimated Time per Response: 1.5 hours.

Frequency of Response: On occasion reporting requirement.

Total Annual Burden: 675 hours.

Total Annual Cost: $54,000.

Obligation to Respond: Required to obtain or retain benefits. The statutory authority for this collection is contained in Sections 154(i), 307, 308 and 309 of the Communications Act of 1934, as amended.

Nature and Extent of Confidentiality: There is no need for confidentiality with this collection of information.

Privacy Impact Assessment(s): No impact(s).

Needs and Uses: The FCC Form 347 is used by licensees/permittees of low power television, TV translator or TV booster stations to apply for a station license. The FCC staff confirms the construction permit terms and station building specifications via FCC Form 347. In addition, the staff extracts the data from the application for inclusion in the subsequent license to operate the station.

Federal Communications Commission.

Sheryl D.Todd,

Deputy Secretary, Office of the Secretary, Office of Managing Director.

[FR Doc. 2014–15179 Filed 6–27–14; 8:45 am]

BILLING CODE 6712–01–P

FEDERAL COMMUNICATIONS COMMISSION

Notice of Public Information Collection(s) Being Reviewed by the Federal Communications Commission, Comments Requested

AGENCY: Federal Communications Commission.

ACTION: Notice; request for comments.

SUMMARY: As part of its continuing effort to reduce paperwork burden and as required by the Paperwork Reduction Act (PRA) of 1995 (44 U.S.C. 3501–3520), the Federal Communications Commission (FCC) invites the general public and other Federal agencies to take this opportunity to comment on the following information collection(s). Comments are requested concerning: Whether the proposed collection of information is necessary for the proper performance of the functions of the Commission, including whether the information shall have practical utility; the accuracy of the Commission's burden estimate; ways to enhance the quality, utility, and clarity of the information collected; ways to minimize the burden of the collection of information on the respondents, including the use of automated collection techniques or other forms of information technology; and further ways to reduce the information burden for small business concerns with fewer than 25 employees.

The FCC may not conduct or sponsor a collection of information unless it displays a currently valid OMB Control Number. No person shall be subject to any penalty for failing to comply with a collection of information subject to the Paperwork Reduction Act (PRA) that does not display a valid Control Number.

DATES: Written Paperwork Reduction Act (PRA) comments should be submitted on or before August 29, 2014. If you anticipate that you will be submitting comments, but find it difficult to do so within the period of time allowed by this notice, you should advise the FCC contact listed below as soon as possible.

ADDRESSES: Submit your PRA comments to Leslie F. Smith, Office of Managing Director (OMD), Federal Communications Commission (FCC), via the Internet at *Leslie.Smith@fcc.gov.* To submit your PRA comments by email, send them to *PRA@fcc.gov.*

FOR FURTHER INFORMATION CONTACT: For additional information, contact Leslie F. Smith at (202) 418–0217, or via the Internet at *PRA@fcc.gov.*

SUPPLEMENTARY INFORMATION:

OMB Control Number: 3060–0855.

Title: Telecommunications Reporting Worksheets and Related Collections, FCC Forms 499–A and 499–Q.

Form Number: FCC Forms 499–A and 499–Q.

Type of Review: Revision of a currently approved collection.

Respondents: Business or other for-profit and not-for-profit institutions.

Number of Respondents and Responses: 6,700 respondents; 41,650 responses.

Estimated Time per Response: 0.25 hours to 25 hours per response.

Frequency of Response: Annually, quarterly, and on occasion reporting requirements.

Obligation to Respond: Mandatory. Statutory authority for this information collection is contained in sections 151, 154(i), 154(j), 155, 157, 159, 201, 205, 214, 225, 254, 303(r), 715 and 719 of the Act, 47 U.S.C. 151, 154(i), 154(j), 155, 157, 159, 201, 205, 214, 225, 254, 303(r), 616, and 620.

Total Annual Burden: 247,375 hours.

Total Annual Cost: No cost(s).

Privacy Act Impact Assessment: No impact(s).

Nature and Extent of Confidentiality: The Commission will allow respondents to certify that data contained in their submissions is privileged or

confidential commercial or financial information and that disclosure of such information would likely cause substantial harm to the competitive position of the entity filing the FCC worksheets. If the Commission receives a request for or proposes to disclose the information, the respondent would be required to make the full showing pursuant to the Commission's rules for withholding from public inspection information submitted to the Commission.

Needs and Uses: This information collection requires contributors to the federal universal service fund, telecommunications relay service fund, and numbering administration to file, pursuant to sections 151, 225, 251 and 254 of the Act, a Telecommunications Reporting Worksheet on an annual basis (Form 499–A) and/or on a quarterly basis (Form 499–Q). The information is also used to calculate FCC regulatory fees for interstate telecommunications service providers.

This information collection is being revised to require online electronic filing for Forms 499–A and 499–Q (currently, the forms may be filed either electronically or on paper). Also, the third-party disclosure requirement is being eliminated.

Federal Communications Commission.

Sheryl D.Todd,

Deputy Secretary, Office of the Secretary, Office of Managing Director.

[FR Doc. 2014–15178 Filed 6–27–14; 8:45 am]

BILLING CODE 6712–01–P

FEDERAL COMMUNICATIONS COMMISSION

Information Collection Being Reviewed by the Federal Communications Commission Under Delegated Authority

AGENCY: Federal Communications Commission.

ACTION: Notice and request for comments.

SUMMARY: As part of its continuing effort to reduce paperwork burden and as required by the Paperwork Reduction Act (PRA) of 1995 (44 U.S.C. 3501–3520), the Federal Communications Commission invites the general public and other Federal agencies to take this opportunity to comment on the following information collection(s). Comments are requested concerning: Whether the proposed collection of information is necessary for the proper performance of the functions of the Commission, including whether the information shall have practical utility; the accuracy of the Commission's burden estimate; ways to enhance the quality, utility, and clarity of the information collected; ways to minimize the burden of the collection of information on the respondents, including the use of automated collection techniques or other forms of information technology; and ways to further reduce the information burden for small business concerns with fewer than 25 employees. The FCC may not conduct or sponsor a collection of information unless it displays a currently valid OMB control number. No person shall be subject to any penalty for failing to comply with a collection of information subject to the Paperwork Reduction Act (PRA) that does not display a valid OMB control number.

DATES: Written Paperwork Reduction Act (PRA) comments should be submitted on or before August 29, 2014. If you anticipate that you will be submitting PRA comments, but find it difficult to do so within the period of time allowed by this notice, you should advise the FCC contact listed below as soon as possible.

ADDRESSES: Submit your PRA comments to Benish Shah, Federal Communications Commission, via the Internet at *Benish.Shah@fcc.gov.* To submit your PRA comments by email send them to: *PRA@fcc.gov.*

FOR FURTHER INFORMATION CONTACT: Benish Shah, Office of Managing Director, (202) 418–7866.

SUPPLEMENTARY INFORMATION:

OMB Approval Number: 3060–0093.

Title: Application for Renewal of Radio Station License for Experimental Radio Service, FCC Form 405.

Form No.: FCC Form 405.

Type of Review: Extension of a currently approved collection.

Respondents: Individuals or household, business or other for-profit and not-for-profit institutions.

Number of Respondents and Responses: 350 respondents and 350 responses.

Estimated Time per Response: 2.25 hour.

Frequency of Response: On occasion and every two year reporting requirements.

Obligation to Respond: Required to obtain or retain benefits. Statutory authority for this information collection (IC) is contained in sections 4(i), 301, 302, 303(e), 303(f), and 303(r), of the Communications Act of 1934, as amended; 47 U.S.C. 154(i), 301, 302, 303(e), 303(f) and 303(r).

Total Annual Burden: 787.5 hours.

Total Annual Cost: $117,250.

Privacy Act Impact Assessment: This information collection affects individuals or households. The Commission has a System of Records, FCC/OET–1 ''Experimental Radio Station License Files'' which cover the personally identifiable information (PII) that individual applicants may include in their submissions for experimental radio authorizations. The system of records notice (SORN) was published in the **Federal Register** on April 5, 2006, *see* 71 FR 17234, 17241. The SORN may be viewed at *http://www.fcc.gov/omd/privacyact/records-systems.html.*

Nature and Extent of Confidentiality: Applicants may request that any information supplied be withheld from public inspection, e.g., granted confidentiality, pursuant to 47 CFR 0.459 of the Commission's rules.

Needs and Uses: This collection will be submitted as an extension (no change in reporting requirements), after this 60 day comment period in order to obtain the full three year clearance from the OMB.

FCC Form 405 is used by the Experimental Radio Service to apply for renewal of radio station licenses at the FCC. Section 307 of the Communications Act of 1934, as amended, limits the term of radio licenses to five years and requires that written applications be submitted for renewal. The regular license period for stations in the Experimental Radio Service is either two or five years.

The information submitted on FCC Form 405 is used by the Commission staff to evaluate the applicant/licensee's need for a license renewal. In performing this function, staff performs analysis of the renewal request as compared to the original license grant to ascertain if any changes are requested. If so, additional analysis is performed to determine if such changes met the requirements of the rules of the Experimental Radio Service for interference free operation. If needed, the collected information is used to coordinate such operation with other Commission bureaus or other Federal Agencies. All applications are also analyzed on their merits regarding whether they meet the general requirements for an Experimental license. These requirements are set out in 47 CFR part 5.

Federal Communications Commission.

Sheryl D.Todd,

Deputy Secretary, Office of the Secretary, Office of Managing Director.

[FR Doc. 2014–15177 Filed 6–27–14; 8:45 am]

BILLING CODE 6712–01–P

FEDERAL COMMUNICATIONS COMMISSION

Information Collection Being Submitted to the Office of Management and Budget for Review and Approval

AGENCY: Federal Communications Commission.

ACTION: Notice and request for comments.

SUMMARY: As part of its continuing effort to reduce paperwork burden and as required by the Paperwork Reduction Act (PRA) of 1995 (44 U.S.C. 3501—3520), the Federal Communications Commission invites the general public and other Federal agencies to take this opportunity to comment on the following information collection(s). Comments are requested concerning: whether the proposed collection of information is necessary for the proper performance of the functions of the Commission, including whether the information shall have practical utility; the accuracy of the Commission's burden estimate; ways to enhance the quality, utility, and clarity of the information collected; ways to minimize the burden of the collection of information on the respondents, including the use of automated collection techniques or other forms of information technology; and ways to further reduce the information burden for small business concerns with fewer than 25 employees. The FCC may not conduct or sponsor a collection of information unless it displays a currently valid OMB control number. No person shall be subject to any penalty for failing to comply with a collection of information subject to the Paperwork Reduction Act (PRA) that does not display a valid OMB control number.

DATES: Written Paperwork Reduction Act (PRA) comments should be submitted on or before July 30, 2014. If you anticipate that you will be submitting PRA comments, but find it difficult to do so within the period of time allowed by this notice, you should advise the FCC contact listed below as soon as possible.

ADDRESSES: Submit your PRA comments to Nicholas A. Fraser, Office of Management and Budget, via fax at 202–395–5167 or via Internet at *Nicholas_A._Fraser@omb.eop.gov* and to Benish Shah, Federal Communications Commission, via the Internet at *Benish.Shah@fcc.gov*. To submit your PRA comments by email send them to: *PRA@fcc.gov.*

FOR FURTHER INFORMATION CONTACT: Benish Shah, Office of Managing Director, (202) 418–7866.

SUPPLEMENTARY INFORMATION:

OMB Control Number: 3060* * *.

Title: Administration of Interoperability Channels, State License, and Band Plan (47 CFR 90.525, 90.529, and 90.531).

Form No.: N/A.

Type of Review: New Collection.

Respondents: State, local or tribal government and not-for-profit institutions.

Number of Respondents and Responses: 2155 respondents; 2155 responses.

Estimated Time per Response: 1 hour (range of 1 hour to 2 hours).

Frequency of Response: On occasion reporting requirements; one-time reporting requirements; and third party disclosure.

Obligation to Respond: Required to obtain or retain benefits. Statutory authority for this information collection is contained 47 U.S.C. 154(i), 161, 303(g), 303(r), and 332(c)(7).

Total Annual Burden: 2,208 hours.

Total Annual Cost: N/A.

Privacy Act Impact Assessment: No impact.

Nature and Extent of Confidentiality: There is no need for confidentiality.

Needs and Uses: Section 90.525 of the Commission's rules requires approval of license applications for Interoperability channels in the 769–775 MHz and 799–805 MHz frequency bands by state-level agency or organization responsible for administering emergency communications. *Section 90.529* of the Commission's rules provides that each state license will be granted subject to the condition that the state certifies on or before each applicable benchmark date that it is providing or prepared to provide ''substantial service.'' *See* OMB Control No. 3060–0798. A licensee must demonstrate that it is providing or prepared to provide substantial service to one third of its geographic area or population by June 13, 2014 and two thirds by June 13, 2019. A licensee will be deemed to be prepared to provide substantial service if the licensee certifies that a radio system has been approved and funded for implementation by the deadline date. Substantial service refers to service which is sound, favorable, and substantially above a level of mediocre service which might minimally warrant renewal. If a state licensee fails to meet any condition of the grant the state license is modified automatically to the frequencies and geographic areas where the state certifies that it is providing substantial service. Any recovered state license spectrum will revert to General Use. However, spectrum licensed to a state under a state license remains unavailable for reassignment to other applicants until the Commission's database reflects the parameters of the modified state license. By Public Notice released April 7, 2014, DA 14–467, the Commission provided guidance on information licensees may provide to demonstrate substantial service, including the kind of public safety service that the licensee is providing with the system; which state channels are in use in the system; whether the licensee's has made its showing based on territory or population served; the percentage of territory/population served by the system footprint; and what signal level is being used to determine the system footprint. *Section 90.531* of the Commission's rules sets forth the band plan for the 763–775 MHz and 793–805 MHz public safety bands. This section covers channel designations for base and mobile use, narrowband segments, combined channels, channel pairing, internal guard band, and broadband. Narrowband general use channels and low power channels require regional planning committee concurrence.

Commission staff will use the information to assign licenses for interoperability and General Use channels, as well as renewal of State licenses. The information will also be used to determine whether prospective licensees operate in compliance with the Commission's rules. Without such information, the Commission could not accommodate State interoperability or regional planning requirements or provide for the efficient use of State frequencies. This information collection includes rules to govern the operation and licensing of 700 MHz band systems to ensure that licensees continue to fulfill their statutory responsibilities in accordance with the Communications Act of 1934, as amended. Such information will continue to be used to verify that applicants are legally and technically qualified to hold licenses, and to determine compliance with Commission rules.

Federal Communications Commission.

Sheryl D. Todd,

Deputy Secretary, Office of the Secretary, Office of Managing Director.

[FR Doc. 2014–15176 Filed 6–27–14; 8:45 am]

BILLING CODE 6712–01–P

FEDERAL COMMUNICATIONS COMMISSION

[ET Docket No. 14–14 and GN Docket No. 12–268; DA 14–852]

Office of Engineering and Technology Seeks Comment on Measurements of LTE Into DTV Interference

AGENCY: Federal Communications Commission.

ACTION: Notice.

SUMMARY: In this document, the Federal Communications Commission's (Commission) Office of Engineering and Technology (OET) seeks to supplement the record in the incentive auction proceeding by inviting comment on measurements of wireless Long-Term Evolution (LTE) interference into digital television (DTV) receivers conducted by OET engineers

DATES: Comments must be filed on or before July 11, 2014.

ADDRESSES: You may submit comments, identified by ET Docket No. 14–14 and GN Docket No. 12–268, by any of the following methods:

- *Federal Communications Commission's Web site: http://fjallfoss.fcc.gov/ecfs2/.* Follow the instructions for submitting comments.
- *Mail:* Robert Weller, Office of Engineering and Technology, Electromagnetic Compatibility Division, Room 76–A140, Federal Communications Commission, 445 12th Street SW., Washington, DC 20554.
- *People with Disabilities:* Contact the FCC to request reasonable accommodations (accessible format documents, sign language interpreters, CART, etc.) by email: *FCC504@fcc.gov* or phone: 202–418–0530 or TTY: 202–418–0432.

For detailed instructions for submitting comments and additional information on the process, see the **SUPPLEMENTARY INFORMATION** section of this document.

FOR FURTHER INFORMATION CONTACT: Robert Weller, Office of Engineering and Technology, (202) 418–7397, email *Robert.Weller@fcc.gov,* and TTY (202) 418–2989.

SUPPLEMENTARY INFORMATION: This is a summary of the Commission's document, ET Docket No. 14–14, DA 14–852, released June 20, 2014. The full text of this document is available for inspection and copying during normal business hours in the FCC Reference Center (Room CY–A257), 445 12th Street SW., Washington, DC 20554. The complete text of this document also may be purchased from the Commission's copy contractor, Best Copy and Printing, Inc., 445 12th Street SW., Room, CY–B402, Washington, DC 20554. The full text may also be downloaded at: *www.fcc.gov.*

Pursuant to §§ 1.415 and 1.419 of the Commission's rules, 47 CFR 1.415, 1.419, interested parties may file comments on or before the date indicated on the first page of this document. Comments may be filed using the Commission's Electronic Comment Filing System (ECFS). *See Electronic Filing of Documents in Rulemaking Proceedings,* 63 FR 24121 (1998).

- *Electronic Filers:* Comments may be filed electronically using the Internet by accessing the ECFS: *http://fjallfoss.fcc.gov/ecfs2/.*
- *Paper Filers:* Parties who choose to file by paper must file an original and one copy of each filing. If more than one docket or rulemaking number appears in the caption of this proceeding, filers must submit two additional copies for each additional docket or rulemaking number.

Filings can be sent by hand or messenger delivery, by commercial overnight courier, or by first-class or overnight U.S. Postal Service mail. All filings must be addressed to the Commission's Secretary, Office of the Secretary, Federal Communications Commission.

- All hand-delivered or messenger-delivered paper filings for the Commission's Secretary must be delivered to FCC Headquarters at 445 12th Street SW., Room TW–A325, Washington, DC 20554. The filing hours are 8:00 a.m. to 7:00 p.m. All hand deliveries must be held together with rubber bands or fasteners. Any envelopes and boxes must be disposed of *before* entering the building.
- Commercial overnight mail (other than U.S. Postal Service Express Mail and Priority Mail) must be sent to 9300 East Hampton Drive, Capitol Heights, MD 20743.
- U.S. Postal Service first-class, Express, and Priority mail must be addressed to 445 12th Street SW., Washington DC 20554.

People with Disabilities: To request materials in accessible formats for people with disabilities (braille, large print, electronic files, audio format), send an email to *fcc504@fcc.gov* or call the Consumer & Governmental Affairs Bureau at 202–418–0530 (voice), 202–418–0432 (tty).

Summary

1. On June 20, 2014, OET issued a public notice seeking to supplement the record in the incentive auction proceeding by inviting comment on measurements of wireless Long-Term Evolution (LTE) interference into digital television (DTV) receivers conducted by OET engineers.

2. In the inter-service interference (ISIX) public Notice, OET invited comment on a methodology for predicting ISIX. For purposes of that methodology, OET assumed that the wireless services operating in the new 600 MHz Band will appear noise-like to the DTV receiver and hence, that the interference potential from LTE will be nearly identical to DTV-to-DTV interference. In addition, OET incorporated an off-frequency rejection (OFR) factor as a function of varying degrees of spectral overlap due to filter roll-off in the misaligned future wireless blocks and existing TV channels in the 600 MHz Band. OET also added 0.8 dB to the interfering wireless signal to account for the possibility of co-channel power from multiple wireless blocks affecting one 6 MHz TV channel. Several commenters raised concerns about these assumptions which form the basis for the D/U ratios of Table 8, the OFR values of Table 9, and the assumed effective radiated power (ERP) in Table 10 of the ISIX Notice.

3. In April 2014, OET engineers tested the characteristics of LTE-into-DTV interference in the FCC Laboratory, and the results of those measurements are presented in the report. As explained in the report, four DTV receivers were tested in order to obtain a reasonable indication of their behavior in the presence of an interfering LTE eNodeB signal.

4. Additionally, the Consumer Electronics Association (CEA) submitted measurements of LTE to DTV interference on six newer model television receivers and two older model receivers.

Specific Topics of Comment

5. OET seeks comment on the measurements and observations discussed in OET's Report. Specifically, OET seeks comment on whether these measurements, in conjunction with CEA's measurements, support the D/U ratios, OFR, and power adjustments that appear in Tables 8, 9, and 10 of the *ISIX Notice.*

6. OET also seeks comment on the relevance of the measurements associated with two receiver models that are more than 7 years old. The OET Report contains measurements of a 2007 model year receiver and the CEA Report contains measurements of a 2006 model year receiver. OET anticipates that these receivers will no longer be commercially available and will be approaching the end of their useful

lifecycle at the time of the wireless build out in the 600 MHz Band.

7. The Notice was issued pursuant to § 0.31 of the Commission's rules by the Office of Engineering and Technology, a member of the Incentive Auction Task Force.

Federal Communications Commission.

Julius P. Knapp,

Chief, Office of Engineering and Technology.

[FR Doc. 2014–15214 Filed 6–27–14; 8:45 am]

BILLING CODE 6712–01–P

FEDERAL MARITIME COMMISSION

[Docket No. 14–06]

Santa Fe Discount Cruise Parking, Inc., D/B/A EZ Cruise Parking, Lighthouse Parking Inc., and Sylvia Robledo D/B/A 81st Dolphin Parking v. The Board of Trustees of the Galveston Wharves, and the Galveston Port Facilities Corporation; Notice of Filing of Complaint and Assignment

Notice is given that a complaint has been filed with the Federal Maritime Commission (Commission) by Santa Fe Discount Cruise Parking, Inc., d/b/a EZ Cruise Parking (EZ Cruise Parking); Lighthouse Parking Inc. (Lighthouse Parking); and Sylvia Robledo d/b/a 81st Dolphin Parking (81st Dolphin Parking), hereinafter ''Complainants,'' against the Board of Trustees of the Galveston Wharves, and the Galveston Port Facilities Corporation, hereinafter ''Respondents.'' Complainants state that EZ Cruise Parking and Lighthouse Parking are respectively for-profit corporations organized and existing under the laws of the State of Texas that provide vehicle parking and shuttle services to cruise passengers using the Port of Galveston Cruise Terminal, and that 81st Dolphin Parking leases and operates a private parking lot facility and shuttle service for cruise passengers using the Port of Galveston Cruise Terminal. Complainants allege that Respondents are marine terminal operators within the meaning of the Shipping Act, 46 U.S.C. 40102(14).

Complainants allege that Respondents have violated the Shipping Act, 46 U.S.C. 41102(c), 41106(2) and (3) by charging Complainants ''. . . 'Access Fees' under Respondents' Tariff that are excessive and not reasonably related to the value of services rendered to Complainants;'' by ''application of such charges, [forcing] Complainants to subsidize Respondents' costs associated with services provided to other users of port facilities . . . [that] receive greater levels of service and benefit from the Respondents' services at a lower cost; and by [refusing] ''. . . to negotiate any modification of its Access Fees charged to Off-Port Parking Users that were increased more than three-fold on May 19, 2014.''

Complainants requests that ''Respondents be required to answer these charges, and that after due investigation and hearing, be ordered to: (i) cease and desist from the . . . described violations of the Shipping Act of 1984; (ii) establish and put in force such practices as . . . [the] Commission determines to be lawful and reasonable; (iii) award reparations to Complainants for the unlawful conduct described in the complaint including the amount of actual injury, plus interest, costs, and attorney's fees; (iv) award any and all other damages that me [sic] be determined to be just an proper; and (v) all other and such relief unto which Complainants may show themselves justly entitled.''

The full text of the complaint can be found in the Commission's Electronic Reading Room at *www.fmc.gov/14–06*.

This proceeding has been assigned to the Office of Administrative Law Judges. The initial decision of the presiding officer in this proceeding shall be issued by June 24, 2015 and the final decision of the Commission shall be issued by December 21, 2015.

Karen V. Gregory,

Secretary.

[FR Doc. 2014–15172 Filed 6–27–14; 8:45 am]

BILLING CODE 6730–01–P

DEPARTMENT OF HEALTH AND HUMAN SERVICES

Office of the Secretary

[Document Identifier HHS–OS–0990–NEW–30D]

Agency Information Collection Activities; Proposed Collection; Public Comment Request

AGENCY: Office of the Assistant Secretary for Health, Office of Adolescent Health, HHS.

ACTION: Notice

SUMMARY: In compliance with section 3507(a)(1)(D) of the Paperwork Reduction Act of 1995, the Office of the Secretary (OS), Department of Health and Human Services, has submitted an Information Collection Request (ICR), described below, to the Office of Management and Budget (OMB) for review and approval. The ICR is for a new collection. Comments submitted during the first public review of this ICR will be provided to OMB. OMB will accept further comments from the public on this ICR during the review and approval period.

DATES: Comments on the ICR must be received on or before July 30, 2014.

ADDRESSES: Submit your comments to *OIRA_submission@omb.eop.gov* or via facsimile to (202) 395–5806.

FOR FURTHER INFORMATION CONTACT: Information Collection Clearance staff, *Information.CollectionClearance@hhs.gov* or (202) 690–6162.

SUPPLEMENTARY INFORMATION: When submitting comments or requesting information, please include the document identifier HHS–OS–0990–NEW–30D for reference.

Information Collection Request Title: Cost Study of Evidence-Based Teen Pregnancy Prevention Programs.

Abstract: The Office of Adolescent Health (OAH), U.S. Department of Health and Human Services (HHS) is requesting approval by OMB on a new collection. The proposed study will provide information on the cost and economic impact of selected evidence-based teen pregnancy prevention programs. This proposed information collection activity includes collecting information on (a) program costs and (b) program impacts from a subset of OAH TPP Program grantees.

Need and Proposed Use of the Information: A *cost tool* will collect comprehensive information on the cost of implementing of each selected program. An *implementation tool* will collect and summarize information on the characteristics of participating grantees. A *staff time use survey* will collect information on how program staff allocates their time across program activities. An *economic evaluation form* will collect information on program impact findings needed to assess the cost-effectiveness of selected programs.

Likely Respondents: A subset of up to 30 OAH TPP Program grantees will be asked to participate in the cost analysis. Of these 30 grantees, up to 15 will also be asked to participate in the economic evaluation. Study respondents will include the grant administrator or fiscal agent, the grantee's evaluator, and program staff.

Burden Statement: Burden in this context means the time expended by persons to generate, maintain, retain, disclose or provide the information requested. This includes the time needed to review instructions, to develop, acquire, install and utilize technology and systems for the purpose of collecting, validating and verifying information, rocessing and maintaining information, and disclosing and providing information, to train

personnel and to be able to respond to a collection of information, to search data sources, to complete and review the collection of information, and to transmit or otherwise disclose the information.

The total annual burden hours estimated for this ICR are summarized in the table below.

TOTAL ESTIMATED ANNUALIZED BURDEN—HOURS

Form name	Number of respondents	Number of responses per respondent	Average burden per response (in hours)	Total burden hours
Cost Tool	30	1	8	240
Implementation Tool	30	1	1	30
Staff Time Use Survey	600	2	⅓	400
Economic Evaluation Form	15	1	3	45
Total				715

Darius Taylor,

Information Collection Clearance Officer.

[FR Doc. 2014–15194 Filed 6–27–14; 8:45 am]

BILLING CODE 4150–30–P

DEPARTMENT OF HEALTH AND HUMAN SERVICES

Administration for Children and Families

Submission for OMB Review; Comment Request

Title: State Plan for Grants to States for Refugee Resettlement.

OMB No.: 0970–0351.

Description: A State Plan is required by 8 U.S.C. 1522 of the Immigration and Nationality Act (the Act) [Title IV, Sec. 412 of the Act] for each State agency requesting Federal funding for refugee resettlement under 8 U.S.C. 524 [Title IV, Sec. 414 of the Act], including Refugee Cash and Medical Assistance, Unaccompanied Minor Refugee Program, Refugee Social Services, Cuban/Haitian Entrant Program and Targeted Assistance program funding. The State Plan is a comprehensive narrative description of the nature and scope of a States programs and provides assurances that the programs will be administered in conformity with the specific requirements stipulated in 45 CFR 400.4–400.9. The State Plan must include all applicable State procedures, designations, and certifications for each requirement as well as supporting documentation.

The plan assures ORR that the State is capable of administering refugee assistance and coordinating employment and other social services for eligible caseloads in conformity with specific requirements. Implementation of the Affordable Care Act has significant impacts on States' administration of Refugee Medical Assistance and requires information to ensure accountability and compliance with regulations. Also, Revised Medical Screening Guidelines for Newly Arriving Refugees policy (State Letter #12–09) requires assurances that medical screening is conducted in compliance with regulations and policies. The increasing complexity of the Unaccompanied Refugee Minor program, impacted by changes in federal child welfare legislation as well as state child welfare statutes, regulations and IV–B and IV–E plans, necessitates information and assurances for review of State Plans for URM programs against requirements and mandatory standards under 45 CFR part 400, subpart H and associated State Letters and ORR guidance. Information and assurances address administrative structure and state oversight, legal responsibility, eligibility, services and case review/planning, and interstate movement.

States must use a pre-print format for required components of State Plans for ORR-funded refugee resettlement services and benefits prepared by the Office of Refugee Resettlement (ORR) of the Administration for Children and Families (ACF).

States must submit by August 15 each year new or amended State Plan for the next Federal fiscal year. For previously approved plan, States must certify no later than October 31 each year that the approved State plan is current and continues in effect.

Respondents: State Agencies, Replacement Designees under 45 CFR 400.301(c), and Wilson-Fish Grantees (State 2 Agencies) administering or supervising the administration of programs under Title IV of the Act.

ANNUAL BURDEN ESTIMATES

Instrument	Number of respondents	Number of responses per respondent	Average burden hours per response	Total burden hours
Title IV state plan	50	1	15	750

Estimated Total Annual Burden Hours: 750.

Additional Information

Copies of the proposed collection can be obtained by writing to the Administration for Children and Families, Office of Planning, Research and Evaluation, 370 L'Enfant Promenade SW., Washington, DC 20447, Attn: ACF Reports Clearance Officer. Email address: *infocollection@acf.hhs.gov.*

OMB Comment

OMB is required to make a decision concerning the collection of information between 30 and 60 days after publication of this document in the **Federal Register**. Therefore, a comment is best assured of having its full effect if OMB receives it within 30 days of publication. Written comments and recommendations for the proposed information collection should be sent directly to the following: Office of Management and Budget, Paperwork

Reduction Project, Email: *OIRA_SUBMISSION@OMB.EOP.GOV.* Attn: Desk Officer for the Administration for Children and Families.

Robert Sargis,

Reports Clearance Officer.

[FR Doc. 2014–15197 Filed 6–27–14; 8:45 am]

BILLING CODE 4184–01–P

ADVISORY COUNCIL ON HISTORIC PRESERVATION

Notice of Advisory Council on Historic Preservation Quarterly Business Meeting

AGENCY: Advisory Council on Historic Preservation.

ACTION: Notice of Advisory Council on Historic Preservation Quarterly Business Meeting.

SUMMARY: Notice is hereby given that the Advisory Council on Historic Preservation (ACHP) will hold its next quarterly meeting on Thursday, July 17, 2014. The meeting will be held in the Auditorium at Houston Hall, Perelman Quadrangle at the University of Pennsylvania, 3417 Spruce Street, Philadelphia, PA, starting at 8:00 a.m.

DATES: The quarterly meeting will take place on Thursday, July 17, 2014, starting at 8:00 a.m. EST.

ADDRESSES: The quarterly meeting will be held in the Auditorium at Houston Hall, Perelman Quadrangle at the University of Pennsylvania, 3417 Spruce Street, Philadelphia, PA.

FOR FURTHER INFORMATION CONTACT: Cindy Bienvenue, 202–517–0202, *cbienvenue@achp.gov.*

SUPPLEMENTARY INFORMATION: The Advisory Council on Historic Preservation (ACHP) is an independent federal agency that promotes the preservation, enhancement, and sustainable use of our nation's diverse historic resources, and advises the President and the Congress on national historic preservation policy. The goal of the National Historic Preservation Act (NHPA), which established the ACHP in 1966, is to have federal agencies act as responsible stewards of our nation's resources when their actions affect historic properties. The ACHP is the only entity with the legal responsibility to encourage federal agencies to factor historic preservation into federal project requirements. For more information on the ACHP, please visit our Web site at *www.achp.gov.*

The agenda for the upcoming quarterly meeting of the ACHP is the following:

Call to Order—8 a.m.

I. Chairman's Welcome

II. Chairman's Report

III. Historic Preservation Policy and Programs

A. Building a More Inclusive Preservation Program

1. Proposed Executive Order

2. Congressional Black Caucus Staff Briefing

3. Asian American-Pacific Islander Initiative

B. Working with Indian Tribes

1. Proposed ACHP Policy for Tribal Historic Preservation Officers

2. Delegation of Authority to Approve Substitution of Tribal Procedures for Section 106

3. Section 106 as a Model Sacred Site Protection Process

4. Funding for Tribal and State Historic Preservation Programs

C. Preserve America Program

D. 50th Anniversary of the National Historic Preservation Act

E. Rightsizing Task Force Report and Implementation Plan

F. ACHP Legislative Agenda

IV. Section 106 Issues

A. Northern Plains Tribal Summit

B. Unified Federal Review for Disaster Recovery Projects

C. Major Program Initiatives Update

1. Report to Congress on Historic Post Offices Disposals

2. Federal Communications Commission Program Alternative for Positive Train Control

3. 2015 Section 3 Report to the President

V. ACHP Management Issues

A. ACHP FY 2015 Budget

B. Alumni Foundation Report

C. ACHP Strategic Plan Revision

VI. New Business

VII. Joint Session with NCSHPO Board of Directors

VIII. Adjourn

The meetings of the ACHP are open to the public. If you need special accommodations due to a disability, please contact Cindy Bienvenue, 202–517–0202 or *cbienvenue@achp.gov,* at least seven (7) days prior to the meeting.

Authority: 16 U.S.C. 470j.

Dated: June 24, 2014.

Javier E. Marques,

Associate General Counsel.

[FR Doc. 2014–15225 Filed 6–27–14; 8:45 am]

BILLING CODE 4310–K6–P

DEPARTMENT OF HOUSING AND URBAN DEVELOPMENT

[Docket No. FR–5752–N–53]

30-Day Notice of Proposed Information Collection: Manufactured Home Construction and Safety Standards Act Reporting Requirements

AGENCY: Office of the Chief Information Officer, HUD.

ACTION: Notice.

SUMMARY: HUD has submitted the proposed information collection requirement described below to the Office of Management and Budget (OMB) for review, in accordance with the Paperwork Reduction Act. The purpose of this notice is to allow for an additional 30 days of public comment.

DATES: *Comments Due Date:* July 30, 2014.

ADDRESSES: Interested persons are invited to submit comments regarding this proposal. Comments should refer to the proposal by name and/or OMB Control Number and should be sent to: HUD Desk Officer, Office of Management and Budget, New Executive Office Building, Washington, DC 20503; fax: 202–395–5806. Email: *OIRA_Submission@omb.eop.gov.*

FOR FURTHER INFORMATION CONTACT: Colette Pollard, Reports Management Officer, QDAM, Department of Housing and Urban Development, 451 7th Street SW., Washington, DC 20410; email Colette Pollard at *Colette.Pollard@hud.gov.* or telephone 202–402–3400. Persons with hearing or speech impairments may access this number through TTY by calling the toll-free Federal Relay Service at (800) 877–8339. This is not a toll-free number. Copies of available documents submitted to OMB may be obtained from Ms. Pollard.

SUPPLEMENTARY INFORMATION: This notice informs the public that HUD has submitted to OMB a request for approval of the information collection described in Section A.

The **Federal Register** notice that solicited public comment on the information collection for a period of 60 days was published on April 11, 2014.

A. Overview of Information Collection

Title of Information Collection: Manufactured Home Construction and Safety Standards Act Reporting Requirements.

OMB Approval Number: 2502–0253.

Type of Request: Extension of currently approved collection.

Form Number: None.

Description of the need for the information and proposed use: The

Federal Standards and Procedural Regulations require manufactured home producers to place labels and notices in and on manufactured homes and mandate State and Private agencies participating in the Federal program to issue reports. These Standards will protect the HUD's interests by requiring certain features of design and construction. In addition, some information collected assists both HUD and State Agency's in locating manufactured homes with defects, which then would create the need for notification and/or correction by the manufacturer.

Respondents: Business or other for-profit.

Estimated Number of Respondents: 165.

Estimated Number of Responses: 59,304.

Frequency of Response: Monthly.

Average Hours per Response: 5.

Total Estimated Burdens: 120,618.

B. Solicitation of Public Comment

This notice is soliciting comments from members of the public and affected parties concerning the collection of information described in Section A on the following:

(1) Whether the proposed collection of information is necessary for the proper performance of the functions of the agency, including whether the information will have practical utility;

(2) The accuracy of the agency's estimate of the burden of the proposed collection of information;

(3) Ways to enhance the quality, utility, and clarity of the information to be collected; and

(4) Ways to minimize the burden of the collection of information on those who are to respond; including through the use of appropriate automated collection techniques or other forms of information technology, e.g., permitting electronic submission of responses.

HUD encourages interested parties to submit comment in response to these questions.

Authority: Section 3507 of the Paperwork Reduction Act of 1995, 44 U.S.C. Chapter 35.

Dated: June 24, 2014.

Colette Pollard,

Department Reports Management Officer, Office of the Chief Information Officer.

[FR Doc. 2014–15264 Filed 6–27–14; 8:45 am]

BILLING CODE 4210–67–P

DEPARTMENT OF HOUSING AND URBAN DEVELOPMENT

[Docket No. FR–5761–N–01]

60-Day Notice of Proposed Information Collection: ''Logic Model'' Grant Performance Reporting Standard Form

AGENCY: Office of Strategic Planning and Management, Grants Management and Oversight Division, HUD.

ACTION: Notice of Proposed Information Collection.

SUMMARY: HUD is seeking approval from the Office of Management and Budget (OMB) for the information collection described below. In accordance with the Paperwork Reduction Act, HUD is requesting comment from all interested parties on the proposed collection of information. The purpose of this notice is to allow for 60 days of public comment.

DATES: *Comments Due Date:* August 29, 2014.

ADDRESSES: Interested persons are invited to submit comments regarding this proposal. Comments should refer to the proposal by name and/or OMB Control Number and should be sent to: Colette Pollard, Reports Management Officer, QDAM, Department of Housing and Urban Development, 451 7th Street SW., Room 4176, Washington, DC 20410–5000; telephone 202–402–3400 (this is not a toll-free number) or email at *Colette.Pollard@hud.gov* for a copy of the proposed forms or other available information. Persons with hearing or speech impairments may access this number through TTY by calling the toll-free Federal Relay Service at (800) 877–8339.

FOR FURTHER INFORMATION CONTACT: Colette Pollard, Reports Management Officer, QDAM, Department of Housing and Urban Development, 451 7th Street SW., Washington, DC 20410; email Colette Pollard at *Colette.Pollard@hud.gov* or you may phone 202–402–3400. This is not a toll-free number. Persons with hearing or speech impairments may access this number through TTY by calling the toll-free Federal Relay Service at (800) 877–8339.

Copies of available documents submitted to OMB may be obtained from Ms. Pollard.

SUPPLEMENTARY INFORMATION: This notice informs the public that HUD is seeking approval from OMB for the information collection described in Section A.

A. Overview of Information Collection

Title of Information Collection: Logic Model ''Grant Performance Reporting Standard Form.

OMB Approval Number: 2535–0114.

Type of Request: Extension of currently approved collection.

Form Number: HUD–96010.

Description of the need for the information and proposed use: The Logic Model is a tool that integrates program operations and program accountability. It links program operations (mission, need, intervention, projected results, and actual results), and program accountability (measurement tool, data source, and frequency of data collection and reporting, including personnel assigned to function). Applicants/grantees should use it to support program planning, monitoring, evaluation, and other management functions.

Estimation of the total number of hours needed to prepare the information collection including number of respondents, frequency of response, and hours of response: An estimation of the total time needed to complete the form is less than ten minutes; number of respondents is 11,000; frequency of response is on the occasion of application submission. The total report burden is 1100 hours.

B. Solicitation of Public Comment

This notice is soliciting comments from members of the public and affected parties concerning the collection of information described in Section A on the following:

(1) Whether the proposed collection of information is necessary for the proper performance of the functions of the agency, including whether the information will have practical utility;

(2) The accuracy of the agency's estimate of the burden of the proposed collection of information;

(3) Ways to enhance the quality, utility, and clarity of the information to be collected; and

(4) Ways to minimize the burden of the collection of information on those who are to respond; including through the use of appropriate automated collection techniques or other forms of information technology, e.g., permitting electronic submission of responses.

HUD encourages interested parties to submit comment in response to these questions.

Authority: Section 3507 of the Paperwork Reduction Act of 1995, 44 U.S.C. Chapter 35.

Dated: June 25, 2014.

Collette Pollard,

Department Reports Management Office, Office of the Chief Information Officer.

[FR Doc. 2014–15265 Filed 6–27–14; 8:45 am]

BILLING CODE 4210–67–P

DEPARTMENT OF THE INTERIOR

Bureau of Safety and Environmental Enforcement

[Docket ID BSEE–2013–0012; OMB Control Number 1014–0022; 14XE1700DX EEEE500000 EX1SF0000.DAQ000]

Information Collection Activities: Oil and Gas and Sulphur Operations in the OCS—General; Submitted for Office of Management and Budget (OMB) Review; Comment Request

ACTION: 30-day Notice.

SUMMARY: To comply with the Paperwork Reduction Act of 1995 (PRA), the Bureau of Safety and Environmental Enforcement (BSEE) is notifying the public that we have submitted to OMB an information collection request (ICR) for review and approval of the paperwork requirements in the regulations under Subpart A, *Oil and Gas and Sulphur Operations in the OCS—General.* This notice also provides the public a second opportunity to comment on the revised paperwork burden of these regulatory requirements.

DATES: You must submit comments by July 30, 2014.

ADDRESSES: Submit comments by either fax (202) 395–5806 or email (*OIRA_Submission@omb.eop.gov*) directly to the Office of Information and Regulatory Affairs, OMB, Attention: Desk Officer for the Department of the Interior (1014–0022). Please provide a copy of your comments to BSEE by any of the means below:

- Electronically go to *http://www.regulations.gov.* In the Search box, enter BSEE–2013–0012 then click search. Follow the instructions to submit public comments and view all related materials. We will post all comments.
- Email *nicole.mason@bsee.gov,* fax (703) 787–1546, or mail or hand-carry comments to the Department of the Interior; BSEE; Regulations and Standards Branch; ATTN: Nicole Mason; 381 Elden Street, HE3313; Herndon, Virginia 20170–4817. Please reference ICR 1014–0022 in your comment and include your name and return address.

FOR FURTHER INFORMATION CONTACT: Nicole Mason, Regulations and Standards Branch, (703) 787–1605, to request additional information about this ICR. To see a copy of the entire ICR submitted to OMB, go to *http://www.reginfo.gov* (select Information Collection Review, Currently Under Review).

SUPPLEMENTARY INFORMATION:

Title: 30 CFR part 250, Subpart A, *Oil and Gas and Sulphur Operations in the OCS—General.*

Form(s): BSEE–0011, BSEE–0132, BSEE–0143, BSEE–1832.

OMB Control Number: 1014–0022.

Abstract: The Outer Continental Shelf (OCS) Lands Act at 43 U.S.C. 1334 authorizes the Secretary of the Interior to prescribe rules and regulations necessary for the administration of the leasing provisions of the Act related to mineral resources on the OCS. Such rules and regulations will apply to all operations conducted under a lease, right-of-way, or a right-of-use and easement. Operations on the OCS must preserve, protect, and develop oil and natural gas resources in a manner that is consistent with the need to make such resources available to meet the Nation's energy needs as rapidly as possible; to balance orderly energy resource development with protection of human, marine, and coastal environments; to ensure the public a fair and equitable return on the resources of the OCS; and to preserve and maintain free enterprise competition.

In addition to the general rulemaking authority of the OCS Lands Act at 43 U.S.C. 1334, section 301(a) of the Federal Oil and Gas Royalty Management Act (FOGRMA), 30 U.S.C. 1751(a), grants authority to the Secretary to prescribe such rules and regulations as are reasonably necessary to carry out FOGRMA's provisions. While the majority of FOGRMA is directed to royalty collection and enforcement, some provisions apply to offshore operations. For example, section 108 of FOGRMA, 30 U.S.C. 1718, grants the Secretary broad authority to inspect lease sites for the purpose of determining whether there is compliance with the mineral leasing laws. Section 109(c)(2) and (d)(1), 30 U.S.C. 1719(c)(2) and (d)(1), impose substantial civil penalties for failure to permit lawful inspections and for knowing or willful preparation or submission of false, inaccurate, or misleading reports, records, or other information. Because the Secretary has delegated some of the authority under FOGRMA to BSEE, 30 U.S.C. 1751 is included as additional authority for these requirements.

The Independent Offices Appropriations Act (31 U.S.C. 9701), the Omnibus Appropriations Bill (Pub. L. 104–133, 110 Stat. 1321, April 26, 1996), and OMB Circular A–25, authorize Federal agencies to recover the full cost of services that confer special benefits. Under the Department of the Interior's implementing policy, BSEE is required to charge fees for services that provide special benefits or privileges to an identifiable non-Federal recipient above and beyond those which accrue to the public at large. A request for approval required in 30 CFR 250.171(e) is subject to cost recovery, and BSEE regulations specify service fees for these requests in 30 CFR 250.125.

Regulations implementing these responsibilities are among those delegated to BSEE. The regulations at 30 CFR Part 250, Subpart A, concern the general regulatory requirements of oil, gas, and sulphur operations in the OCS (including the associated forms), and are the subject of this collection. This request also covers any related Notices to Lessees and Operators (NTLs) that BSEE issues to clarify, supplement, or provide additional guidance on some aspects of our regulations.

The BSEE uses the information collected under the Subpart A regulations to ensure that operations on the OCS are carried out in a safe and pollution-free manner, do not interfere with the rights of other users on the OCS, and balance the protection and development of OCS resources. Specifically, we use the information collected to:

- Review records of formal crane operator and rigger training, crane operator qualifications, crane inspections, testing, and maintenance to ensure that lessees/operators perform operations in a safe and workmanlike manner and that equipment is maintained in a safe condition. The BSEE also uses the information to make certain that all new and existing cranes installed on OCS fixed platforms must be equipped with anti-two block safety devices, and to assure that uniform methods are employed by lessees for load testing of cranes.
- Review welding plans, procedures, and records to ensure that welding is conducted in a safe and workmanlike manner by trained and experienced personnel.
- Provide lessees/operators greater flexibility to comply with regulatory requirements through approval of alternative equipment or procedures and departures to regulations if they

demonstrate equal or better compliance with the appropriate performance standards.

• Ensure that injection of gas promotes conservation of natural resources and prevents waste.

• Record the agent and local agent empowered to receive notices and comply with regulatory orders issued.

• Provide for orderly development of leases through the use of information to determine the appropriateness of lessee/operator requests for suspension of operations, including production.

• Improve safety and environmental protection on the OCS through collection and analysis of accident reports to ascertain the cause of the accidents and to determine ways to prevent recurrences.

• Ascertain when the lease ceases production or when the last well ceases production in order to determine the 180th day after the date of completion of the last production. The BSEE will use this information to efficiently maintain the lessee/operator lease status.

• Allow lessees/operators who exhibit unacceptable performance an incremental approach to improving their overall performance prior to a final decision to disqualify a lessee/operator or to pursue debarment proceedings through the execution of a performance improvement plan (PIP). The Subpart A regulations do not address the actual process that we will follow in pursuing the disqualification of operators under §§ 250.135 and 250.136; however, our internal enforcement procedures include allowing such operators to demonstrate a commitment to acceptable performance by the submission of a PIP.

This information collection request has current forms and a new form associated with this collection. We have addressed any and all issues/changes to the forms as follows:

• New Form BSEE–0011, *iSEE,* Internet-Based Safety and Environmental Enforcement Reporting System, was created to clarify what information is needed when someone reports an apparent violation (§ 250.193). This reporting system provides members of the offshore oil and gas industry, as well as the public, with the ability for the electronic reporting of suspected violations of, or noncompliance with, any and all safety or environmentally-related laws or regulations; as well as any violations of or noncompliance with any associated lease, plan, or permit requirements that occur offshore. Information on Form BSEE–0011:

—The first 4 parts of the form are optional and for the purposes of asking follow-up questions if necessary.
- Last Name
- First Name
- Email Address
- Phone number

—The Category of Information section is used to specify what type of potential violation is being reported so that it can be routed internally to the appropriate BSEE personnel.

—The Region section is used to specify which region the potential violation occurred in so that it can be routed internally to the appropriate BSEE personnel.

—The Location Information provides BSEE with the ability to locate (using various data options as entered by the reporting party) where the potential violation took place.
- Company Name
- Area Block
- Lease Number
- Production Facility Name
- Drilling Rig Name
- GPS Coordinate Latitude and Longitude
- Date of Offense
- Other

—A Detailed Description of Problem or Event is used to facilitate BSEE in determining whether the potential violation warrants an investigation.

• Revisions to Form BSEE–1832, *Incident(s) of Noncompliance (INCs),* are due to BSEE developing a new electronic process to issue INCs and handle acknowledgements of INCs. The changes on the form pertain to giving the operator options on how to report back to BSEE for reporting the resolution of the issues identified in the INC, either via paper or electronically. The BSEE will continue the option to issue paper INCs and mail paper INCs; however, our inspectors will stop issuing hand-written INCs for most normal inspection violations and, instead, generate an INC on the inspector's tablet PCs. After marking a Preliminary-INC as a violation, the inspector will be able to generate an INC on the tablet and ask the operator to ''sign'' the tablet. The application will capture the signature and the inspector will generate the INC in PDF format. We added a certification to reflect that false statements may be subject to criminal penalties.

Form BSEE–0132, *Hurricane and Tropical Storm Evacuation and Production Curtailment Statistics,* is used in the Gulf of Mexico OCS Region (GOMR) to obtain general information such as company name, contact, date, time, telephone number; as well as number of platforms and drilling rigs evacuated and not evacuated, and production shut-in statistics for oil (BOPD) and gas (MMSCFD). We added a certification to reflect that false statements may be subject to criminal penalties.

Form BSEE–0143, *Facility/Equipment Damage Report,* is used to assess initial damage and then be aware of changes until the damaged structure or equipment is returned to service; as well as production rate at time of shut-in (BPD and/or MMCFPD), cumulative production shut-in (BPD and/or MMCFPD), and estimated time to return to service (in days). We added a certification to reflect that false statements may be subject to criminal penalties.

Most responses are mandatory, while others are required to obtain or retain benefits, or voluntary. No questions of a sensitive nature are asked. The BSEE protects information considered proprietary under the Freedom of Information Act (5 U.S.C. 552) and DOI's implementing regulations (43 CFR Part 2), and under regulations at 30 CFR 250.197, *Data and information to be made available to the public or for limited inspection,* and 30 CFR part 252, *OCS Oil and Gas Information Program.*

Frequency: On occasion, daily, weekly, monthly, and varies by section.

Description of Respondents: Potential respondents comprise Federal OCS oil, gas, and sulphur lessees/operators.

Estimated Reporting and Recordkeeping Hour Burden: The estimated annual hour burden for this information collection is a total of 84,391 hours. The following chart details the individual components and estimated hour burdens. In calculating the burdens, we assumed that respondents perform certain requirements in the normal course of their activities. We consider these to be usual and customary and took that into account in estimating the burden.

BILLING CODE 4310–VH–P

BURDEN BREAKDOWN

Citation 30 CFR 250 Subpart A; Related Forms /NTLs	Reporting or Recordkeeping Requirement*	Hour Burden	Average No. of Annual Responses	Annual Burden Hours (rounded)
		Non-Hour Cost Burdens		
Authority and Definition of Terms				
104; Form BSEE-1832	Appeal orders or decisions; appeal INCs.	Exempt under 5 CFR 1320.4(a)(2), (c).		0
Performance Standards				
109(a); 110	Submit welding, burning, and hot tapping plans.	4	51 plans	204
118; 121; 124	Apply for injection of gas; use BSEE-approved formula to determine original gas from injected.	10	6 applications	60
		Subtotal	**57 Responses**	**264 Hours**
Cost Recovery Fees				
125; 126	Cost Recovery Fees, confirmation receipt, etc.; verbal approvals pertaining to fees.	Cost Recovery Fees and related items are covered individually throughout Subpart A.		0
Forms				
130-133 (Form BSEE-1832)	Submit "green" response copy of Form BSEE-1832, INC(s), indicating date violations corrected; or submit same info via electronic reporting.	3	2,764 forms	8,292
186(a)(3); NTL	Apply to receive administrative entitlements to eWell (electronic/digital form submittals).	Not considered information collection under 5 CFR 1320.3(h)(1).		0
192 (Form BSEE-0132)	Daily report of evacuation statistics for natural occurrence/hurricane (GOMR Form BSEE-0132 (form takes 1 hour)) when circumstances warrant; inform BSEE when you resume production.	3	884 reports or forms	2,652
192(b) (Form BSEE-0143)	Use Form BSEE-0143 to submit an initial damage report to the Regional Supervisor.	3	4 forms	12
192(b) (Form BSEE-0143)	Use Form BSEE-0143 to submit subsequent damage reports on a monthly basis until damaged structure or equipment is returned to service; immediately when information changes; date item returned to service must be in final report.	1	4 forms	4
193 (Form BSEE-0011)	Report apparent violations or non-compliance on Form BSEE-0011.	1.5	6 reports	9
		Subtotal	**3,662 Responses**	**10,969 Hours**
Inspection of Operations				
130-133	Request reconsideration from issuance of an INC.	7	222 requests	1,554
	Request waiver of 14-day response time.	1	296 waivers	296

	Notify BSEE before returning to operations if shut-in.	1	2,026 notices	2,026
133, NTL	Request reimbursement within 90 days of inspection for food, quarters, and transportation, provided to BSEE representatives. Submit supporting verifications of the meals, such as a meal log w/inspectors signature.	1.5	2 requests	3
		Subtotal	**2,546 Responses**	**3,879 Hours**
Disqualification				
135 BSEE internal process	Submit PIP under BSEE implementing procedures for enforcement actions.	40	4 plans	160
		Subtotal	**4 Responses**	**160 Hours**
Special Types of Approval				
140	Request various oral approvals not specifically covered elsewhere in regulatory requirements.	2	346 requests	692
140(c)	Submit letter when stopping approved flaring with required information.	Burden covered under 30 CFR Part 250, Subpart K (1014-0019).		0
141; 198	Request approval to use new or alternative procedures, along with supporting documentation if applicable, including BAST not specifically covered elsewhere in regulatory requirements.	22	1,430 requests	31,460
142; 198	Request approval of departure from operating requirements not specifically covered elsewhere in regulatory requirements, along with supporting documentation if applicable.	3.5	405 requests	1,418
145	Submit designation of agent and local agent for Regional Supervisor' and/or Regional Director's approval.	1	9 submittals	9
		Subtotal	**2,190 Responses**	**33,579 Hours**
Naming and Identifying Facilities and Wells (Does Not Include MODUs)				
150; 151; 152; 154(a)	Name and identify facilities, artificial islands, MODUs, helo landing facilities etc., with signs.	4	597 new / replacement signs	2,388
150; 154(b)	Name and identify wells with signs.	2	286 new wells	572
		Subtotal	**883 Responses**	**2,960 Hours**
Suspensions				
168; 171; 172; 174; 175; 177; 180(b), (d)	Request suspension of operation or production; submit schedule of work leading to commencement; supporting information; include pay.gov confirmation receipt.	10	646 requests	6,460
		$2,123 fee x 646 = $1,371,458		
	Submit progress reports on a suspension of operation or production as condition of approval.	3	335 reports	1,005

172(b); 177(a)	Conduct site-specific study; submit results; request payment by another party. No instances requiring this study in several years--could be necessary if a situation occurred such as severe damage to a platform or structure caused by a hurricane or a vessel collision.	100	1 study / report	100
177(b), (c), (d)	Various references to submitting new, revised, or modified exploration plan, development/production plan, or development operations coordination document.	Burden covered under BOEM's 30 CFR Part 550, Subpart B (1010-0151).		0
		Subtotal	**982 Responses**	**7,565 Hours**
			$1,371,458 Non-Hour Cost Burden	
Primary Lease Requirements, Lease Term Extensions, and Lease Cancellations				
180(a), (h), (i),	Notify and submit report on various lease-holding operations and lease production activities.	1	63 reports or notices	63
180(e), (j)	Request more than 180 days to resume operations; notify BSEE if operations do not begin within 180 days.	3	3 requests/ notifications	9
		0.5		2
180(f), (g), (h), (i)	Submit various operation and production data to demonstrate production in paying quantities to maintain lease beyond primary term; notify BSEE when you begin conducting operations beyond its primary term.	3	384 submissions / notifications	1,152
		0.5		192
		Subtotal	**450 Responses**	**1,418 Hours**
Information and Reporting Requirements				
186; NTL	Submit information and reports, as BSEE requires.	12	202 Submittals	2,424
187; 188(a-b); 189; 190; 192; NTL	Report to the District Manager immediately via oral communication and written follow-up within 15-calendar days, incidents pertaining to: fatalities; injuries; LoWC; fires; explosions; all collisions resulting in property or equipment damage >$25K; structural damage to an OCS facility; cranes; incidents that damage or disable safety systems or equipment (including firefighting systems); include hurricane reports such as platform/rig evacuation, rig damage, P/L damage, and platform damage; operations personnel to muster for evacuation not related to weather or drills; any additional information required. If requested, submit copy marked as public information.	1.5 Oral	505 Oral reports	758
		4 Written	671 Written reports	2,684
187(d)	Report all spills of oil or other liquid pollutants.	Burden covered under 30 CFR Part 254 (1014-0007).		0

188(a)(5)	Report to District Manager hydrogen sulfide (H2S) gas releases immediately by oral communication.	Burden covered under 30 CFR Part 250, Subpart D (1014-0018).		0
191	Submit written statement/Request compensation mileage and services for testimony re: accident investigation.	Exempt under 5 CFR 1320.4(a)(2), (c).		0
194(c)	Report archaeological discoveries.	3	7 reports	21
195	Notify District Manager within 5 workdays of putting well in production status (usually oral). Follow-up with either fax/email within same 5 day period (burden includes oral and written).	1	2,040 notifications	2,040
196	Request reimbursement of reproduction and processing costs of G&G data/information requested by the Regional Director.	1	1 request	1
197(c)	Submit confidentiality agreement.	1	1 submittal	1
		Subtotal	**3,427 Responses**	**7,929 Hours**
Recordkeeping				
108(e)	Retain records of design and construction for life of crane, including installation records for any anti-two block safety devices; all inspection, testing, and maintenance for at least 4 years; crane operator and all rigger personnel qualifications for at least 4 years; all records must be kept at the OCS fixed platform.	4	2,011 record-keepers	8,044
109(b); 113(c)	Retain welding plan and drawings of safe-welding areas at site; designated person advises in writing that it is safe to weld.	3	948 operations	2,844
132(b)(3)	During inspections, make records available as requested by inspectors.	4	1,195 requests	4,780
		Subtotal	**4,154 Responses**	**15,668 Hours**
TOTAL BURDEN			**18,355 Responses**	**84,391 Hours**
			$1,371,458 Non-Hour Cost Burden	

* In the future, BSEE will be allowing the option of electronic reporting for certain requirements.

Estimated Reporting and Recordkeeping Non-Hour Cost Burden: We have identified one non-hour cost burden. Requests for a Suspension of Operations or a Suspension of Production (§ 250.171) requires a cost recovery fee of $2,123. We estimate a total reporting non-hour cost burden of $1,371,458. We have not identified any other non-hour cost burdens associated with this collection of information.

Public Disclosure Statement: The PRA (44 U.S.C. 3501, *et seq.,*) provides that an agency may not conduct or sponsor a collection of information unless it displays a currently valid OMB control number. Until OMB approves a collection of information, you are not obligated to respond.

Comments: Section 3506(c)(2)(A) of the PRA (44 U.S.C. 3501, *et seq.,*) requires each agency ". . . to provide notice . . . and otherwise consult with members of the public and affected agencies concerning each proposed collection of information . . ." Agencies must specifically solicit comments to: (a) Evaluate whether the collection is necessary or useful; (b) evaluate the accuracy of the burden of the proposed collection of information; (c) enhance the quality, usefulness, and clarity of the information to be collected; and (d) minimize the burden on the respondents, including the use of technology.

To comply with the public consultation process, we published a **Federal Register** notice on March 26, 2014 (79 FR 16810), announcing that we would submit this ICR to OMB for approval. The notice provided the required 60-day comment period. In addition, § 250.199 provides the OMB Control Number for the information collection requirements imposed by the 30 CFR Part 250, Subpart A regulations and forms. The regulation also informs the public that they may comment at any time on the collections of information and provides the address to which they should send comments.

Between the last collection submitted and this collection, we received one comment from a private citizen concerning BSEE not having any options for electronic submission of Form BSEE–0132, *Hurricane and Tropical Storm Evacuation and Production Curtailment Statistics (GOMR).* Our response: An electronic option does exist. The BSEE provides a secure alternative for operators to report the information required on BSEE–0132 in eWell.

Form BSEE–0011, *iSEE,* was out for comment and published in the **Federal Register** on November 18, 2013 (78 FR 69118); and on March 26, 2014 (79 FR 16810). We received two comments from a private citizen (submitted same comment for both 60-day notices) that Form BSEE–0011 should include the same or something similar as admonition to the reporter against false reporting. Our response: The BSEE would like some kind of a report of what individuals have encountered. There could be situations in which people think they saw something but aren't sure—we still would like them to report so BSEE can further investigate. With the statement on the form, we feel that this would deter individuals from reporting. Even without the statement on the form, the individuals/submitters are still subject to penalties for false statements, so we could still penalize any abuse or malicious intent of the system.

Public Availability of Comments: Before including your address, phone number, email address, or other personal identifying information in your comment, you should be aware that your entire comment—including your personal identifying information—may be made publicly available at any time. While you can ask us in your comment to withhold your personal identifying information from public review, we cannot guarantee that we will be able to do so.

Information Collection Clearance Officer: Cheryl Blundon, 703–787–1607.

Dated: June 19, 2014.

Robert W. Middleton,

Deputy Chief, Office of Offshore Regulatory Programs.

[FR Doc. 2014–15317 Filed 6–27–14; 8:45 am]

BILLING CODE 4310–VH–C

DEPARTMENT OF THE INTERIOR

Bureau of Land Management

[F–14910–D, F–14910–K; LLAK940000–L14100000–HY0000–P]

Alaska Native Claims Selection

AGENCY: Bureau of Land Management, Interior.

ACTION: Notice of decision approving lands for conveyance.

SUMMARY: As required by 43 CFR 2650.7(d), notice is hereby given that the Bureau of Land Management (BLM) will issue an appealable decision to NANA Regional Corporation, Inc., Successor in Interest to Putoo Corporation. The decision approves the surface estate in the lands described below for conveyance pursuant to the Alaska Native Claims Settlement Act (ANCSA) (43 U.S.C. 1601, *et seq.*). The subsurface estate in these lands will be conveyed to NANA Regional Corporation, Inc. when the surface estate is conveyed to NANA Regional Corporation, Inc., as Successor in Interest to Putoo Corporation. Putoo Corporation was the original ANCSA corporation for the village of Noorvik, but merged with the NANA Regional Corporation in 1976 under the authority of Public Law 94–204. The lands are in the vicinity of Noorvik, Alaska, and are located in:

Kateel River Meridian, Alaska

T. 15 N., R. 10 W.,
Sec. 3.
Containing 598.99 acres.
T. 15 N., R. 11 W.,
Secs. 1, 2, 11, and 12.
Containing 2,351.65 acres.
Aggregating 2,950.64 acres.

Notice of the decision will also be published once a week for four consecutive weeks in the *Arctic Sounder.*

DATES: Any Cparty claiming a property interest in the lands affected by the decision may appeal the decision in accordance with the requirements of 43 CFR part 4 within the following time limits:

1. Unknown parties, parties unable to be located after reasonable efforts have been expended to locate, parties who fail or refuse to sign their return receipt, and parties who receive a copy of the decision by regular mail which is not certified, return receipt requested, shall have until July 30, 2014 to file an appeal.

2. Parties receiving service of the decision by certified mail shall have 30 days from the date of receipt to file an appeal.

Parties who do not file an appeal in accordance with the requirements of 43 CFR part 4 shall be deemed to have waived their rights. Notices of appeal transmitted by electronic means, such as facsimile or email, will not be accepted as timely filed.

ADDRESSES: A copy of the decision may be obtained from: BLM, Alaska State Office, 222 West Seventh Avenue, #13, Anchorage, AK 99513–7504.

FOR FURTHER INFORMATION CONTACT: The BLM by phone at 907–271–5960 or by email at *blm_ak_akso_public_room@blm.gov.* Persons who use a Telecommunications Device for the Deaf (TDD) may call the Federal Information Relay Service (FIRS) at 1–800–877–8339 to contact the BLM during normal business hours. In addition, the FIRS is available 24 hours a day, 7 days a week, to leave a message or question with the BLM. The BLM will reply during normal business hours.

Joe J. Labay,

Land Transfer Resolution Specialist, Division of Lands and Cadastral.

[FR Doc. 2014–15320 Filed 6–27–14; 8:45 am]

BILLING CODE 4310–JA–P

DEPARTMENT OF THE INTERIOR

Bureau of Land Management

[F–14900–A2; F–14926–A2; LLAK940000–L14100000–HY0000–P]

Alaska Native Claims Selection

AGENCY: Bureau of Land Management, Interior.

ACTION: Notice of decision approving lands for conveyance.

SUMMARY: As required by 43 CFR 2650.7(d), notice is hereby given that the Bureau of Land Management (BLM) will issue an appealable decision to The Kuskokwim Corporation, Successor in Interest to Napamute Limited and Chuathbaluk Company. The decision approves the surface estate in the lands described below for conveyance pursuant to the Alaska Native Claims Settlement Act (43 U.S.C. 1601, *et seq*). The subsurface estate in these lands will be conveyed to Calista Corporation when the surface estate is conveyed to The Kuskokwim Corporation, Successor in Interest to Napamute Limited and Chuathbaluk Company. The lands are in the vicinity of Napaimute and Chuathbaluk, Alaska, and are located in:

Seward Meridian, Alaska

T. 16 N., R. 51.W.,
Sec. 29.
Containing 617.38 acres.

T. 18 N., R. 54 W.,
Secs. 16 and 21.
Containing 1,280.00 acres.
T. 19 N., R. 55 W.,
Sec. 17.
Containing 640 acres.
T. 18 N., R. 56 W.,
Sec. 11.
Containing 640 acres.
Aggregating 3,177.38 acres.

Notice of the decision will also be published once a week for four consecutive weeks in the *Delta Discovery.*

DATES: Any party claiming a property interest in the lands affected by the decision may appeal the decision in accordance with the requirements of 43 CFR part 4 within the following time limits:

1. Unknown parties, parties unable to be located after reasonable efforts have been expended to locate, parties who fail or refuse to sign their return receipt, and parties who receive a copy of the decision by regular mail which is not certified, return receipt requested, shall have until July 30, 2014 to file an appeal.

2. Parties receiving service of the decision by certified mail shall have 30 days from the date of receipt to file an appeal.

Parties who do not file an appeal in accordance with the requirements of 43 CFR part 4 shall be deemed to have waived their rights. Notices of appeal transmitted by electronic means, such as facsimile or email, will not be accepted as timely filed.

ADDRESSES: A copy of the decision may be obtained from: Bureau of Land Management, Alaska State Office, 222 West Seventh Avenue, #13, Anchorage, Alaska 99513–7504.

FOR FURTHER INFORMATION CONTACT: The BLM by phone at 907–271–5960 or by email at *blm_ak_akso_public_room@blm.gov*. Persons who use a Telecommunications Device for the Deaf (TDD) may call the Federal Information Relay Service (FIRS) at 1–800–877–8339 to contact the BLM during normal business hours. In addition, the FIRS is available 24 hours a day, 7 days a week, to leave a message or question with the BLM. The BLM will reply during normal business hours.

Ralph L. Eluska, Sr.,

Land Transfer Resolution Specialist, Division of Lands and Cadastral.

[FR Doc. 2014–15321 Filed 6–27–14; 8:45 am]

BILLING CODE 4310–JA–P

DEPARTMENT OF THE INTERIOR

National Park Service

[NPS–WASO–CR–14829; PPWOCRADI0, PCU00RP14.R50000]

Information Collection Request Sent to the Office of Management and Budget (OMB) for Approval; Archeology Permit Applications and Reports

AGENCY: National Park Service, Interior.

ACTION: Notice; request for comments.

SUMMARY: We (National Park Service, NPS) have sent an Information Collection Request (ICR) to OMB for review and approval. We summarize the ICR below and describe the nature of the collection and the estimated burden and cost. This information collection is scheduled to expire on June 30, 2014. We may not conduct or sponsor and a person is not required to respond to a collection of information unless it displays a currently valid OMB control number. However, under OMB regulations, we may continue to conduct or sponsor this information collection while it is pending at OMB.

DATES: You must submit comments on or before July 30, 2014.

ADDRESSES: Send your comments and suggestions on this information collection to the Desk Officer for the Department of the Interior at OMB–OIRA at (202) 395–5806 (fax) or *OIRA_Submission@omb.eop.gov* (email). Please provide a copy of your comments to Madonna L. Baucum, Information Collection Clearance Officer, National Park Service, 1849 C Street NW., (2601), Washington, DC 20240 (mail); or *madonna_baucum@nps.gov* (email). Please include ''1024–0037'' in the subject line of your comments.

FOR FURTHER INFORMATION CONTACT: To request additional information about this ICR, contact Karen Mudar at *Karen_Mudar@nps.gov* (email) or 202–354–2103 (telephone). You may review the ICR online at *http://www.reginfo.gov.* Follow the instructions to review Department of the Interior collections under review by OMB.

SUPPLEMENTARY INFORMATION:

OMB Control Number: 1024–0037.

Title: Archeology Permit Applications and Reports, 43 CFR parts 3 and 7.

Form Number(s): DI Form 1926.

Type of Request: Extension of a currently approved collection.

Description of Respondents: Individuals or organizations wishing to excavate or remove archeological resources from public or Indian lands.

Respondent's Obligation: Required to obtain or retain a benefit.

Number of Respondents: 773.

Frequency of Collection: On occasion.

Activity	Number of annual responses	Completion time per response hours	Total annual burden hours
Application	773	2.5	1,933
Reports	773	.5	387
Totals	1,546		2,320

Estimated Annual Nonhour Burden Cost: None.

Abstract: Section 4 of the Archeological Resources Protection Act (ARPA) of 1979 (16 U.S.C 470cc), and Section 3 of the Antiquities Act (AA) of 1906 (16 U.S.C. 432), authorize any individual or institution to apply to Federal land managing agencies to scientifically excavate or remove archeological resources from public or Indian lands. Archeological investigations that require permits include excavation, shovel-testing, coring, pedestrian survey (with and without removal of artifacts), underwater archeology, photogrammetry, and rock art documentation. Individuals, academic and scientific institutions, museums, and businesses that propose to conduct archeological field investigations must obtain a permit before the project may begin.

To apply for a permit, applicants submit DI Form 1926 (Application for Permit for Archeological Investigations). In general, an application includes, but is not limited to, the following information:

- Statement of Work.
- Statement of Applicant's Capabilities.

▪ Statement of Applicant's Past Performance.

▪ Curriculum vitae for Principal Investigator(s) and Project Director(s).

▪ Written consent by State or tribal authorities to undertake the activity on State or tribal lands that are managed by Federal land managing agencies, if required by the State or tribe.

▪ Curation Authorization.

▪ Detailed Schedule of All Project Activities.

Persons receiving a permit must submit a final report upon completion of the field component of the research project.

Comments: On January 21, 2014, we published in the **Federal Register** (79 FR 3402) a notice of our intent to request that OMB renew approval for this information collection. In that notice, we solicited comments for 60 days, ending on March 24, 2014. We did not receive any comments in response to the notice.

We again invite comments concerning this information collection on:

• Whether or not the collection of information is necessary, including whether or not the information will have practical utility;

• The accuracy of our estimate of the burden for this collection of information;

• Ways to enhance the quality, utility, and clarity of the information to be collected; and

• Ways to minimize the burden of the collection of information on respondents.

Comments that you submit in response to this notice are a matter of public record. Before including your address, phone number, email address, or other personal identifying information in your comment, you should be aware that your entire comment, including your personal identifying information, may be made publicly available at any time. While you can ask OMB in your comment to withhold your personal identifying information from public review, we cannot guarantee that it will be done.

Dated: June 24, 2014.

Madonna L. Baucum,

Information Collection Clearance Officer, National Park Service.

[FR Doc. 2014–15360 Filed 6–26–14; 4:15 pm]

BILLING CODE 4310–EH–P

DEPARTMENT OF JUSTICE

[OMB Number 1122–0018]

Agency Information Collection Activities; Proposed eCollection eComments Requested; Extension of a Currently Approved Collection

AGENCY: Office on Violence Against Women, Department of Justice.

ACTION: 60-day notice.

SUMMARY: The Department of Justice (DOJ), Office on Violence Against Women, will be submitting the following information collection request to the Office of Management and Budget (OMB) for review and approval in accordance with the Paperwork Reduction Act of 1995. The proposed information collection is published to obtain comments from the public and affected agencies.

DATES: Comments are encouraged and will be accepted for 60 days until August 29, 2014

FOR FURTHER INFORMATION CONTACT: If you have additional comments especially on the estimated public burden or associated response time, suggestions, or need a copy of the proposed information collection instrument with instructions or additional information, please contact Cathy Poston, Office on Violence Against Women, at 202–514–5430.

SUPPLEMENTARY INFORMATION: This process is conducted in accordance with 5 CFR 1320.10. Written comments and suggestions from the public and affected agencies concerning the proposed collection of information are encouraged. Your comments should address one or more of the following four points:

—Evaluate whether the proposed collection of information is necessary for the proper performance of the functions of the Office on Violence Against Women, including whether the information will have practical utility;

—Evaluate the accuracy of the agency's estimate of the burden of the proposed collection of information, including the validity of the methodology and assumptions used;

—Evaluate whether and if so how the quality, utility, and clarity of the information to be collected can be enhanced; and

—Minimize the burden of the collection of information on those who are to respond, including through the use of appropriate automated, electronic, mechanical, or other technological collection techniques or other forms of information technology, e.g., permitting electronic submission of responses.

Overview of This Information Collection

(1) *Type of Information Collection:* Extension of a currently approved collection.

(2) *Title of the Form/Collection:* Semi-Annual Progress Report for the Grants to Indian Tribal Governments Program (Tribal Governments Program).

(3) *Agency form number, if any, and the applicable component of the Department of Justice sponsoring the collection:* Form Number: 1122–0018. U.S. Department of Justice, Office on Violence Against Women.

(4) *Affected public who will be asked or required to respond, as well as a brief abstract:* The affected public includes the approximately 85 grantees of the Grants to Indian Tribal Governments Program (Tribal Governments Program), a grant program authorized by the Violence Against Women Act of 2005. This discretionary grant program is designed to enhance the ability of tribes to respond to violent crimes against Indian women, enhance victim safety, and develop education and prevention strategies. Eligible applicants are recognized Indian tribal governments or their authorized designees.

(5) *An estimate of the total number of respondents and the amount of time estimated for an average respondent to respond/reply:* It is estimated that it will take the approximately 85 respondents (Tribal Governments Program grantees) approximately one hour to complete a semi-annual progress report. The semi-annual progress report is divided into sections that pertain to the different types of activities in which grantees may engage. A Tribal Governments Program grantee will only be required to complete the sections of the form that pertain to its own specific activities.

(6) *An estimate of the total public burden (in hours) associated with the collection:* The total annual hour burden to complete the data collection forms is 170 hours, that is 85 grantees completing a form twice a year with an estimated completion time for the form being one hour.

If additional information is required contact: Jerri Murray, Department Clearance Officer, United States Department of Justice, Justice Management Division, Policy and Planning Staff, Two Constitution Square, 145 N Street NE., 3E.405B, Washington, DC 20530.

Dated: June 24, 2014.

Jerri Murray,

Department Clearance Officer for PRA, U.S. Department of Justice.

[FR Doc. 2014–15133 Filed 6–27–14; 8:45 am]

BILLING CODE 4410–FX–P

DEPARTMENT OF JUSTICE

[OMB Number 1122–0010]

Agency Information Collection Activities; Proposed eCollection eComments Requested; Extension of a Currently Approved Collection

AGENCY: Office on Violence Against Women, Department of Justice.

ACTION: 60-day notice.

SUMMARY: The Department of Justice (DOJ), Office on Violence Against Women, will be submitting the following information collection request to the Office of Management and Budget (OMB) for review and approval in accordance with the Paperwork Reduction Act of 1995. The proposed information collection is published to obtain comments from the public and affected agencies.

DATES: Comments are encouraged and will be accepted for 60 days until August 29, 2014.

FOR FURTHER INFORMATION CONTACT: If you have additional comments especially on the estimated public burden or associated response time, suggestions, or need a copy of the proposed information collection instrument with instructions or additional information, please contact Cathy Poston, Office on Violence Against Women, at 202–514–5430.

SUPPLEMENTARY INFORMATION: This process is conducted in accordance with 5 CFR 1320.10. Written comments and suggestions from the public and affected agencies concerning the proposed collection of information are encouraged. Your comments should address one or more of the following four points:

—Evaluate whether the proposed collection of information is necessary for the proper performance of the functions of the Office on Violence Against Women, including whether the information will have practical utility;

—Evaluate the accuracy of the agency's estimate of the burden of the proposed collection of information, including the validity of the methodology and assumptions used;

—Evaluate whether and if so how the quality, utility, and clarity of the information to be collected can be enhanced; and

—Minimize the burden of the collection of information on those who are to respond, including through the use of appropriate automated, electronic, mechanical, or other technological collection techniques or other forms of information technology, e.g., permitting electronic submission of responses.

Overview of This Information Collection

(1) *Type of Information Collection:* Extension of a currently approved collection.

(2) *Title of the Form/Collection:* Semi-Annual Progress Report for Grantees from the Grants to State Sexual Assault and Domestic Violence Coalitions Program (State Coalitions Program).

(3) *Agency form number, if any, and the applicable component of the Department of Justice sponsoring the collection:* Form Number: 1122–0010. U.S. Department of Justice, Office on Violence Against Women.

(4) *Affected public who will be asked or required to respond, as well as a brief abstract:* The affected public includes the 88 grantees from the State Coalitions Program. The State Coalitions Program provides federal financial assistance to state coalitions to support the coordination of state victim services activities, and collaboration and coordination with federal, state, and local entities engaged in violence against women activities.

(4) *An estimate of the total number of respondents and the amount of time estimated for an average respondent to respond/reply:* It is estimated that it will take the approximately 88 respondents (State Coalitions Program grantees) approximately one hour to complete a semi-annual progress report. The semi-annual progress report is divided into sections that pertain to the different types of activities in which grantees may engage. A State Coalitions Program grantee will only be required to complete the sections of the form that pertain to its own specific activities.

(6) *An estimate of the total public burden (in hours) associated with the collection:* The total annual hour burden to complete the data collection forms is 176 hours, that is 88 grantees completing a form twice a year with an estimated completion time for the form being one hour.

If additional information is required contact: Jerri Murray, Department Clearance Officer, United States Department of Justice, Justice Management Division, Policy and Planning Staff, Two Constitution Square, 145 N street NE., 3E.405B, Washington, DC 20530.

Dated: June 24, 2014.

Jerri Murray,

Department Clearance Officer for PRA, U.S. Department of Justice.

[FR Doc. 2014–15131 Filed 6–27–14; 8:45 am]

BILLING CODE 4410–FX–P

DEPARTMENT OF JUSTICE

[OMB Number 1122–0011]

Agency Information Collection Activities; Proposed eCollection eComments Requested; Extension of a Currently Approved Collection

AGENCY: Office on Violence Against Women, Department of Justice.

ACTION: 60-day notice.

SUMMARY: The Department of Justice (DOJ), Office on Violence Against Women, will be submitting the following information collection request to the Office of Management and Budget (OMB) for review and approval in accordance with the Paperwork Reduction Act of 1995. The proposed information collection is published to obtain comments from the public and affected agencies.

DATES: Comments are encouraged and will be accepted for 60 days until August 29, 2014.

FOR FURTHER INFORMATION CONTACT: If you have additional comments especially on the estimated public burden or associated response time, suggestions, or need a copy of the proposed information collection instrument with instructions or additional information, please contact Cathy Poston, Office on Violence Against Women, at 202–514–5430.

SUPPLEMENTARY INFORMATION: This process is conducted in accordance with 5 CFR 1320.10. Written comments and suggestions from the public and affected agencies concerning the proposed collection of information are encouraged. Your comments should address one or more of the following four points:

—Evaluate whether the proposed collection of information is necessary for the proper performance of the functions of the Office on Violence Against Women, including whether the information will have practical utility;

—Evaluate the accuracy of the agency's estimate of the burden of the proposed collection of information, including the validity of the methodology and assumptions used;

—Evaluate whether and if so how the quality, utility, and clarity of the information to be collected can be enhanced; and
—Minimize the burden of the collection of information on those who are to respond, including through the use of appropriate automated, electronic, mechanical, or other technological collection techniques or other forms of information technology, e.g., permitting electronic submission of responses.

Overview of This Information Collection

(1) *Type of Information Collection:* Extension of a currently approved collection.

(2) *Title of the Form/Collection:* Semi-Annual Progress Report for Grantees from the Grants to Support Tribal Domestic Violence and Sexual Assault Coalitions Program (Tribal Coalitions Program).

(3) *Agency form number, if any, and the applicable component of the Department of Justice sponsoring the collection:* Form Number: 1122–0011. U.S. Department of Justice, Office on Violence Against Women.

(4) *Affected public who will be asked or required to respond, as well as a brief abstract:* The affected public includes the 14 grantees from the Tribal Coalitions Program. The Tribal Coalitions Program grantees include Indian tribal governments that will support the development and operation of new or existing nonprofit tribal domestic violence and sexual assault coalitions in Indian country. These grants provide funds to develop and operate nonprofit tribal domestic violence and sexual assault coalitions in Indian country to address the unique issues that confront Indian victims. The Tribal Coalitions Program provides resources for organizing and supporting efforts to end violence against Indian women.

(5) *An estimate of the total number of respondents and the amount of time estimated for an average respondent to respond/reply:* It is estimated that it will take the 14 respondents (grantees from the Tribal Coalitions Program) approximately one hour to complete a Semi-Annual Progress Report. The Semi-Annual Progress Report is divided into sections that pertain to the different types of activities that grantees may engage in with grant funds. Grantees must complete only those sections that are relevant to their activities.

(6) *An estimate of the total public burden (in hours) associated with the collection:* The total annual hour burden to complete the data collection forms is 28 hours, that is 14 grantees completing a form twice a year with an estimated completion time for the form being one hour.

If additional information is required contact: Jerri Murray, Department Clearance Officer, United States Department of Justice, Justice Management Division, Policy and Planning Staff, Two Constitution Square, 145 N Street NE., 3E., 405B, Washington, DC 20530.

Dated: June 24, 2014.

Jerri Murray,

Department Clearance Officer for PRA, U.S. Department of Justice.

[FR Doc. 2014–15132 Filed 6–27–14; 8:45 am]

BILLING CODE 4410–FX–P

DEPARTMENT OF JUSTICE

Notice of Lodging of Proposed Consent Decree Under the Clean Water Act

On Monday, June 23, 2014, the Department of Justice lodged a proposed Consent Decree with the United States District Court for the District of Utah (Central Division) in the lawsuit entitled *United States* v. *Ivory Homes, Ltd.,* Civil Action No. 2:14–cv–00460–BCW. To settle the claims against it under the Clean Water Act (''CWA''), Ivory Homes, Ltd. (''Ivory Homes'') will pay a civil penalty of $250,000, and perform injunctive relief in the form of implementing a management and reporting system designed to provide increased oversight of on-the-ground operations and ensure greater compliance with the CWA. In return, the United States will grant Ivory Homes a covenant not to sue or take administrative action pursuant to the CWA for the civil violations alleged in the Complaint, filed simultaneously with the Consent Decree.

The case was brought under Section 402 of the CWA, 33 U.S.C. 1342, against Ivory Homes for violations of applicable permits governing discharge of storm water from five construction sites in Utah. The Complaint alleges that, at each of these five sites, Ivory Homes failed to comply with the terms and conditions of a general permit issued under Section 402 of the CWA, 33 U.S.C. 1342, which establishes conditions for discharge of storm water associated with construction activities, including clearing, grading and excavating, into waters of the State of Utah.

The publication of this notice opens a period for public comment on the Consent Decree. Comments should be addressed to the Assistant Attorney General, Environment and Natural Resources Division, and should refer to *United States* v. *Ivory Homes, Ltd.,* D.J. Ref. No. 90–5–1–1–09865. All comments must be submitted no later than thirty (30) days after the publication date of this notice. Comments may be submitted either by email or by mail:

To submit comments:	*Send them to:*
By email	*pubcomment-ees.enrd@usdoj.gov.*
By mail	Assistant Attorney General, U.S. DOJ—ENRD, P.O. Box 7611, Washington, DC 20044–7611.

During the public comment period, the Consent Decree may be examined and downloaded at this Justice Department Web site: *http://www.usdoj.gov/enrd/Consent_Decrees.html.* We will provide a paper copy of the Consent Decree upon written request and payment of reproduction costs. Please mail your request and payment to: Consent Decree Library, U.S. DOJ—ENRD, P.O. Box 7611, Washington, DC 20044–7611.

Please enclose a check or money order for $18.75 (25 cents per page reproduction cost) payable to the United States Treasury.

Robert Brook,

Assistant Section Chief, Environmental Enforcement Section, Environment and Natural Resources Division.

[FR Doc. 2014–15128 Filed 6–27–14; 8:45 am]

BILLING CODE 4410–15–P

DEPARTMENT OF JUSTICE

Antitrust Division

Notice Pursuant to the National Cooperative Research and Production Act of 1993—3D PDF Consortium, Inc.

Notice is hereby given that, on May 30, 2014, pursuant to Section 6(a) of the National Cooperative Research and Production Act of 1993, 15 U.S.C. 4301 *et seq.* (''the Act''), 3D PDF Consortium, Inc. (''3D PDF'') has filed written notifications simultaneously with the Attorney General and the Federal Trade Commission disclosing changes in its membership. The notifications were filed for the purpose of extending the Act's provisions limiting the recovery of antitrust plaintiffs to actual damages under specified circumstances. Specifically, Theorem Solutions Ltd., Staffordshire, UNITED KINGDOM; and Capvidia NA LLC, New Ulm, MN, have been added as parties to this venture.

Also, EOS Solutions Corporation, Rochester, MI, has withdrawn as a party to this venture.

No other changes have been made in either the membership or planned activity of the group research project. Membership in this group research project remains open, and 3D PDF intends to file additional written notifications disclosing all changes in membership.

On March 27, 2012, 3D PDF filed its original notification pursuant to Section 6(a) of the Act. The Department of Justice published a notice in the **Federal Register** pursuant to Section 6(b) of the Act on April 20, 2012 (77 FR 23754).

The last notification was filed with the Department on October 31, 2013. A notice was published in the **Federal Register** pursuant to Section 6(b) of the Act on December 3, 2013 (78 FR 72713).

Patricia A. Brink,

Director of Civil Enforcement, Antitrust Division.

[FR Doc. 2014–15319 Filed 6–27–14; 8:45 am]

BILLING CODE P

DEPARTMENT OF LABOR

Office of the Secretary

Agency Information Collection Activities; Submission for OMB Review; Comment Request; Escape and Evacuation Plans (Pertains to Underground Metal and Nonmetal Mines)

ACTION: Notice.

SUMMARY: The Department of Labor (DOL) is submitting the Mine Safety and Health Administration (MSHA) sponsored information collection request (ICR) titled, ''Escape and Evacuation Plans (Pertains to Underground Metal and Nonmetal Mines),'' to the Office of Management and Budget (OMB) for review and approval for continued use, without change, in accordance with the Paperwork Reduction Act of 1995 (PRA), 44 U.S.C. 3501 et seq. Public comments on the ICR are invited.

DATES: The OMB will consider all written comments that agency receives on or before July 30, 2014.

ADDRESSES: A copy of this ICR with applicable supporting documentation; including a description of the likely respondents, proposed frequency of response, and estimated total burden may be obtained free of charge from the RegInfo.gov Web site at *http://www.reginfo.gov/public/do/PRAViewICR?ref_nbr=201404-1219-003* (this link will only become active on the day following publication of this notice) or by contacting Michel Smyth by telephone at 202–693–4129, TTY 202–693–8064, (these are not toll-free numbers) or by email at *DOL_PRA_PUBLIC@dol.gov*.

Submit comments about this request by mail or courier to the Office of Information and Regulatory Affairs, Attn: OMB Desk Officer for DOL–MSHA, Office of Management and Budget, Room 10235, 725 17th Street NW., Washington, DC 20503; by Fax: 202–395–6881 (this is not a toll-free number); or by email: *OIRA_submission@omb.eop.gov*. Commenters are encouraged, but not required, to send a courtesy copy of any comments by mail or courier to the U.S. Department of Labor-OASAM, Office of the Chief Information Officer, Attn: Departmental Information Compliance Management Program, Room N1301, 200 Constitution Avenue NW., Washington, DC 20210; or by email: *DOL_PRA_PUBLIC@dol.gov*.

FOR FURTHER INFORMATION CONTACT: Contact Michel Smyth by telephone at 202–693–4129, TTY 202–693–8064, (these are not toll-free numbers) or by email at *DOL_PRA_PUBLIC@dol.gov*.

Authority: 44 U.S.C. 3507(a)(1)(D).

SUPPLEMENTARY INFORMATION: This ICR seeks to extend PRA authority for the Escape and Evacuation Plans (Pertains to Underground Metal and Nonmetal Mines) information collection requirements codified in regulations 30 CFR 57.11053, which requires the development of an escape and evacuation plan specifically addressing the unique conditions of each underground metal and nonmetal mine and requires that revisions be made as mining progresses. The plan must be available to representatives of the MSHA and conspicuously posted at locations convenient to all persons on the surface and underground. The mine operator and the MSHA are required jointly to review the plan at least once every six months. Federal Mine Safety and Health Act of 1977, as amended section 103(h) authorizes this information collection. *See* 30 U.S.C. 813(h).

This information collection is subject to the PRA. A Federal agency generally cannot conduct or sponsor a collection of information, and the public is generally not required to respond to an information collection, unless it is approved by the OMB under the PRA and displays a currently valid OMB Control Number. In addition, notwithstanding any other provisions of law, no person shall generally be subject to penalty for failing to comply with a collection of information that does not display a valid Control Number. *See* 5 CFR 1320.5(a) and 1320.6. The DOL obtains OMB approval for this information collection under Control Number 1219–0046.

OMB authorization for an ICR cannot be for more than three (3) years without renewal, and the current approval for this collection is scheduled to expire on July 31, 2014. The DOL seeks to extend PRA authorization for this information collection for three (3) more years, without any change to existing requirements. The DOL notes that existing information collection requirements submitted to the OMB receive a month-to-month extension while they undergo review. For additional substantive information about this ICR, see the related notice published in the **Federal Register** on February 27, 2014 (79 FR 11129).

Interested parties are encouraged to send comments to the OMB, Office of Information and Regulatory Affairs at the address shown in the ADDRESSES section within thirty (30) days of publication of this notice in the **Federal Register**. In order to help ensure appropriate consideration, comments should mention OMB Control Number 1219–0046. The OMB is particularly interested in comments that:

- Evaluate whether the proposed collection of information is necessary for the proper performance of the functions of the agency, including whether the information will have practical utility;
- Evaluate the accuracy of the agency's estimate of the burden of the proposed collection of information, including the validity of the methodology and assumptions used;
- Enhance the quality, utility, and clarity of the information to be collected; and
- Minimize the burden of the collection of information on those who are to respond, including through the use of appropriate automated, electronic, mechanical, or other technological collection techniques or other forms of information technology, e.g., permitting electronic submission of responses.

Agency: DOL–MSHA.

Title of Collection: Escape and Evacuation Plans (Pertains to Underground Metal and Nonmetal Mines).

OMB Control Number: 1219–0049.

Affected Public: Private Sector—businesses or other for-profits.

Total Estimated Number of Respondents: 251.

Total Estimated Number of Responses: 502.

Total Estimated Annual Time Burden: 4,267 hours.

Total Estimated Annual Other Costs Burden: $2,510.

Dated: June 24, 2014.

Michel Smyth,

Departmental Clearance Officer.

[FR Doc. 2014–15198 Filed 6–27–14; 8:45 am]

BILLING CODE 4510–43–P

DEPARTMENT OF LABOR

Employment and Training Administration

Revised Methodology for Selecting Job Corps Centers for Closure: Comments Request

AGENCY: Office of Job Corps, Employment and Training Administration (ETA), Labor.

ACTION: Notice

SUMMARY: The Employment and Training Administration (ETA) of the U.S. Department of Labor (Department or DOL) issues this notice to propose a Revised Methodology for Selecting Job Corps Centers for Closure. The Office of Job Corps in ETA published a proposed methodology for selecting centers for closure at 78 FR 2284 on January 10, 2013. We received a total of eighteen (18) public comments in response to this proposal. After analyzing the comments, the Department has decided to adjust the weights given to the various factors. Additionally, the Department is proposing to adjust the methodology to use the performance period of Program Year (PY) 2008 through PY 2012 instead of PY 2007 through PY 2011 as was proposed in the January 10, 2013 **Federal Register** Notice. The Department is also proposing additional considerations that we will include in the closure methodology. This revised methodology would be used to select centers for closure. The Department requests public comment on the revised methodology, as outlined in this notice.

DATES: To be ensured consideration, comments must be submitted in writing on or before July 21, 2014.

ADDRESSES: You may submit comments, identified by Docket Number ETA–2014–0001, by only one of the following methods:

Federal e-Rulemaking Portal: http://www.regulations.gov. Follow the Web site instructions for submitting comments.

Mail and hand delivery/courier: Submit comments to Lenita Jacobs-Simmons, Acting National Director, Office of Job Corps (OJC), U.S. Department of Labor, Employment and Training Administration, 200 Constitution Avenue NW., Room N–4459, Washington, DC 20210. Due to security-related concerns, there may be a significant delay in the receipt of submissions by United States Mail. You must take this into consideration when preparing to meet the deadline for submitting comments. The Department will post all comments received on *http://www.regulations.gov* without making any changes to the comments or redacting any information, including any personal information provided. The *http://www.regulations.gov* Web site is the Federal e-rulemaking portal and all comments posted there are available and accessible to the public. The Department recommends that commenters not include personal information such as Social Security Numbers, personal addresses, telephone numbers, and email addresses that they do not want made public in their comments as such submitted information will be available to the public via the *http://www.regulations.gov* Web site. Comments submitted through *http://www.regulations.gov* will not include the email address of the commenter unless the commenter chooses to include that information as part of his or her comment. It is the responsibility of the commenter to safeguard personal information.

Instructions: All submissions received should include the Docket Number for the notice: Docket Number ETA–2014–0001. Please submit your comments by only one method. Again, please note that due to security concerns, postal mail delivery in Washington, DC may be delayed. Therefore, the Department encourages the public to submit comments on *http://www.regulations.gov.*

Docket: All comments on this proposal for a methodology to select centers for closure will be available on the *http://www.regulations.gov* Web site. The Department also will make all of the comments it receives available for public inspection by appointment during normal business hours at the above address. If you need assistance to review the comments, the Department will provide appropriate aids such as readers or print magnifiers. The Department will make copies of this proposed methodology available, upon request, in large print and electronic file on computer disk. To schedule an appointment to review the comments and/or obtain the notice in an alternative format, contact the Office of Job Corps at (202) 693–3000 (this is not a toll-free number). You may also contact this office at the address listed below.

FOR FURTHER INFORMATION CONTACT: Lenita Jacobs-Simmons, Acting National Director, Office of Job Corps, ETA, U.S. Department of Labor, 200 Constitution Avenue NW., Room N–4463, Washington, DC 20210; Telephone (202) 693–3000 (this is not a toll-free number). Individuals with hearing or speech impairments may access the telephone number above via TTY by calling the toll-free Federal Information Relay Service at 1–(877) 889–5627 (TTY/TDD).

SUPPLEMENTARY INFORMATION:

Background

Established in 1964, the Job Corps program is a national program administered by the Employment and Training Administration (ETA) in the Department of Labor (DOL or Department). It is the nation's largest federally-funded, primarily residential training program for at-risk youth, ages 16–24. With 125 centers in 48 states, Puerto Rico, and the District of Columbia, Job Corps provides economically-disadvantaged youth with the academic, career technical, and employability skills to enter the workforce, enroll in post-secondary education, or enlist in the military. Job Corps emphasizes the attainment of academic credentials, including a high school diploma (HSD) or a high school equivalency credential, and career technical training credentials, including industry-recognized credentials, state licensures, and pre-apprenticeship credentials.

Large and small businesses, nonprofit organizations, and Native American tribes manage and operate 97 of the Job Corps centers through contractual agreements with the Department of Labor following competitive procurement, while 28 centers are operated through an interagency agreement with the U.S. Department of Agriculture (USDA). Separate from center operation contracts, Job Corps also contracts with firms and companies, usually small businesses, through competitive procurements, to recruit new students for the program and place graduates and former enrollees into meaningful jobs, education programs, the military, or apprenticeship training. In some instances, however, Job Corps contracts with one entity to both operate a center and manage student recruitment and job placements. Job Corps also receives annual Construction, Rehabilitation,

and Acquisition (CRA) funding to build, maintain, expand, or upgrade new and existing facilities at all 125 centers.

Pursuing Performance Excellence

In Fiscal Year (FY) 2011, we began an ambitious reform agenda aimed at improving the performance of Job Corps centers nationwide. This included setting higher standards for all centers, identifying chronically underperforming centers, and implementing appropriate corrective action.

As part of this reform process, Job Corps continues to undergo a rigorous and comprehensive review of its operations and management to identify changes that can be made to improve the program's effectiveness and efficiency. Job Corps has implemented a National Certification Initiative to strengthen and align existing career technical training programs to technical standards established by industries or trade organizations, which enables students to graduate with industry-recognized credentials. These credentials provide for long-term attachment to the workforce and economic mobility as Job Corps graduates advance through their careers. They also ensure that program graduates have gained the skills and knowledge necessary to compete in today's workforce. Job Corps has also expanded academic opportunities for students with the introduction of evening educational programs, as well as community college partnerships and expanded high school diploma options. Current budgetary constraints make it even more critical to ensure the program's resources are deployed in a way that maximizes results to students and taxpayers.

Job Corps has intensified and reinforced federal oversight of operations and performance outcomes for all centers. Federal program managers supervise centers through monitoring visits, desk audits, and Contractor Performance Assessment Reports during each contractor's performance period. Job Corps regional offices also conduct the Regional Office Center Assessments. Through these oversight activities, Job Corps federal program managers develop Performance Improvement Plans (PIPs) for entire centers that need improvement, or Corrective Action Plans (CAPs) to address specific aspects of operations, such as career technical training. Both PIPs and CAPs are used for continued monitoring and implemented for USDA and contract centers respectively. These oversight actions have strengthened collaboration between Job Corps, contractors, and the USDA to rectify deficiencies, and improve policy compliance and performance outcomes.

While the majority of centers meet program standards, some centers are chronically low-performing and have remained in the bottom cohort of center performance rankings for multiple years despite extensive DOL interventions including corrective measures. Given the resource intensiveness of the Job Corps model, the Administration has determined that it can no longer continue to expend resources on the small number of chronically low-performing centers that have repeatedly failed to provide participants with high-quality Job Corps programming.

For the purpose of identifying chronically low-performing centers for closure, DOL has defined ''chronically low-performing centers'' as those that consistently lagged in overall performance over the past five consecutive program years without evidence of significant recent performance improvement. As we explain below, the January 10, 2013 **Federal Register** Notice had proposed using the performance data from PY 2007–2011. Final PY 2012 data is now available and has been published on the Job Corps Web site. The Department is proposing to use performance data from PY 2008–2012 in the closure methodology.

The Department is committed to selecting centers for closure in a manner that is transparent and objective. We previously solicited comments on our proposed methodology for selecting centers for closure. We have now analyzed those comments and revised the closure methodology to reflect that public feedback. Job Corps' published performance metrics were the primary consideration in the selection of centers for closure. Provided below is our revised methodology for using the Outcome Measurement System (OMS, Job Corps' internal, comprehensive performance management system. For details, please go to *jobcorps.gov*—About Job Corps—Performance and Planning—Job Corps Performance Management System Overview Guide) and other factors to select proposed centers for closure. The Department is also proposing additional considerations that we will include in the closure methodology.

The Department is requesting comments on the change in the data we will use and on the additional considerations proposed for inclusion in the methodology. Interested parties may submit comments to DOL on these subjects, and on the proposed closure methodology as a whole. The Department will consider these comments as we finalize the methodology and select centers for closure.

Process for Selecting Job Corps Centers for Closure

On August 14, 2012, the Office of Job Corps hosted a national Job Corps listening session, via webinar, with the Job Corps community to solicit input on the methodology factors. More than 100 Job Corps stakeholders participated in the session and provided criteria-related suggestions in the areas of performance, geographic location, local economic impact, contract budgets, facilities, and the time period for evaluating chronic low performance.

On January 10, 2013, the Office of Job Corps published a **Federal Register** Notice requesting public comments on a proposed methodology for selecting Job Corps centers for closure (78 FR 2284). The Department received a total of 18 public comments, which we reviewed and analyzed. As a result of this analysis, we revised the methodology factors for selection of Job Corps centers for closure, as explained below. The Department is also proposing additional considerations for inclusion in the methodology.

Factors for Selecting Job Corps Centers for Closure

Provided below is a description of the revised methodology factors the Department proposes to use to select Job Corps centers for closure.

As the Department proposed in the January 10, 2013 **Federal Register** Notice, we propose to use the following primary criteria against which all centers were measured:

1. Five-year OMS performance level, including considerations for patterns of demonstrable and recent performance improvement. The OMS includes the following 14 measures:

- High School Diploma (HSD) or General Educational Development (GED) Attainment Rate;
- Career Technical Training (CTT) Completion Rate;
- Combination HSD or GED, and CTT Attainment Rate;
- Average Literacy Gain;
- Average Numeracy Gain;
- CTT Industry-Recognized Credential Attainment Rate;
- CTT Completer Job—Training Match/Post-Secondary Credit Placement Rate;
- Former Enrollee Initial Placement Rate;
- Graduate Initial Placement Rate;
- Graduate Average Hourly Wage at Placement;
- Graduate Full-Time Job Placement Rate;

○ Graduate 6-Month Follow-up Placement Rate;

○ Graduate 6-Month Average Weekly Earnings;

○ Graduate 12-Month Follow-up Placement Rate; and

2. Five-year On-Board Strength (OBS); and

3. Five-year Facility Condition Index (FCI).

After ranking the centers based on the primary criteria, we will then apply the following additional considerations:

1. Continued availability of Job Corps services in each state, the District of Columbia, and Puerto Rico;

2. Sufficiency of data available to evaluate center performance;

3. Indication of significant recent performance improvement; and

4. Job Corps' continuing commitment to diversity.

1. Five-Year Performance Levels

Given that the Job Corps' performance metrics provide a comprehensive assessment of center performance, allow for comparison of performance among centers, and supply enough data for decision makers to determine trends over time, the OMS will be the guiding factor in selecting centers for closure. The Department believes this approach is the most equitable and transparent for both stakeholders and the public, as these published performance metrics have driven center performance and programmatic decisions for over a decade. The Department invites public comments on how the five-year performance levels have been incorporated into the closure methodology below.

The Department has determined that the closure methodology will evaluate each center's overall OMS ratings for five full program years to derive a weighted five-year average performance rating. We selected the five-year performance period for the following reasons:

- The five-year period is reasonably long enough to incorporate both the most recent performance data and relatively older data;
- It allows enough time to analyze impact of any Performance Improvement Plans (PIPs);
- It provides a stable basis for comparison, since the OMS had no significant changes over the past five years; and
- It relies on published outcomes that are familiar to the Job Corps community.

In the January 10, 2013 **Federal Register** Notice, the past five years of performance data we proposed using for this factor was the data from PY 2007–2011. We now propose to use the performance data for PY 2008–2012 in the closure methodology.

The Department received public comments that recommended using OMS ratings for the last 10 consecutive program years with a different weight structure to identify chronically low performing centers and excluding PY 2011 data. The comments stated that five program years was not enough time for centers to exhaust all options to improve, and 10 years would allow the assessment of a center that may have had multiple operators. In addition, the comments stated that PY 2011 performance data was impacted by Job Corps' cost saving actions taken at the end of that program year and should be excluded from the calculation.

The Department considered these comments and other options during the development of the final methodology criteria, and determined that five program years is long enough to provide a solid basis for assessing a center's performance. Additionally, Job Corps' OMS has been held fairly consistent and stable over the past five program years, with no dramatic shifts in weights, goals or measures. This allows for a strong comparison of consistent data that would be weakened considerably if the time period were extended. Finally, Job Corps' cost saving actions at the end of PY 2011 were limited to a short period of enrollment suspension in the summer, a hiring freeze, budget and spending plan reviews, moderate reductions of some centers' incremental funding, and tighter control on student travel and allowance costs. They did not have any significant impact on the PY 2011 OMS results. Similarly, the cost savings activities in PY 2012 did not appear to have a significant impact on the PY 2012 OMS performance results. Since the PY 2012 enrollment suspension was applied to all centers, the overall improved OMS performance in PY 2012 is largely attributable to the smaller student populations that centers served and the more concentrated services they were able to receive during the suspension period.

The performance factor in the previous closure methodology was originally assigned a weight of 70% in the **Federal Register** Notice dated January 10, 2013. Public comments received suggested that the weights for OBS and Facility Condition Index (FCI) should be reduced as factors, allowing an increase from 70% to 90% in the performance factor. The Department agrees with public comments suggesting increasing the weighting factor for OMS from 70% to 90%, and made this change. The original OMS and OBS ratings for each of the five program years, which exceeded 100% for some centers, were normalized at one hundred percent (100%) to be consistent with the FCI data. ''Normalized'' means the data has been placed on a 100-point scale. The calculation formula for the final methodology also contains the normalized data for OMS.

As proposed in the January 10, 2013 **Federal Register** Notice, the final closure methodology weights recent performance more heavily than performance in earlier years. This approach addresses centers that may have had recent improvements in performance. To reflect this, weights are applied to each of the five program year's performance data, with recent years receiving a greater weight than earlier years. The year-by-year weighted structure is as follows:

PY 2012	30%
PY 2011	25%
PY 2010	20%
PY 2009	15%
PY 2008	10%
Total:	100%

The calculation formula for five-year performance for the final closure methodology is as follows:

Center's Five-Year Weighted Average Rating × 90% = Overall Performance Rating

2. On-Board Strength

On-Board Strength is an efficiency rating that demonstrates the extent to which a center operates at full capacity. Job Corps already uses this measure to assess center performance. The measure is reported as a percentage, calculated by the actual slot capacity divided by the planned slot capacity (daily number of students that a center is authorized to serve). The national goal for OBS is 100% in order to operate the program at full capacity, maximize program resources, and fulfill the mission of serving the underserved student population.

As proposed in the January 10, 2013 **Federal Register** Notice, this criterion of the methodology evaluates each center's end of Program Year OBS rating for the last five full program years to derive a five-year average rating. As explained above in the context of OMS data, the January 10, 2013 **Federal Register** Notice stated that the closure methodology would use data from the five-year period of PY 2007–2011. Now DOL is proposing to use the OBS data from PY 2008–2012.

The Department received numerous public comments regarding OBS which can be summarized into two categories. The first group of comments suggested

reducing the weight of the OBS criterion because most Job Corps centers rely on third-party admission contractors for enrollment. The second group suggested excluding the PY 2011 OBS data because it was impacted by Job Corps' cost saving actions taken at the end of PY 2011.

The Department agrees with public comments suggesting reduction of the weighting factor for OBS from 20% to 5%. Adoption of this suggestion reflects DOL's recognition that centers should not be held solely responsible for enrollment and retention of students. Reducing the weight of the OBS factor also enables the Department to strengthen its emphasis on performance, making performance the predominant factor in consideration for center closure. Further, we recognized that the June/July 2012 enrollment suspension impacted PY 2011 OBS results. To address this issue, the Office of Job Corps issued Program Information Notice 12–17 on October 1, 2012 stating that the May 31, 2012, Program Year Cumulative OBS (PY–COBS) report will be used as the basis for assessing center-level OBS performance for PY 2011. Therefore, the Department will use the May 31, 2012 PY–COBS report as the PY 2011 OBS report for calculating each center's OBS rating. In addition, we adjusted downward the relative performance goals in the OA OMS Report Card. This action had the effect of using the first 11 months of the program year as the official performance basis for PY 2011, thereby holding contractors harmless for the remaining month of OBS measurements. Additionally, since the performance basis for the center closure methodology is over a five-year period, we determined that the absence of a single month would not distort a center's historic performance trends to any meaningful degree.

PY 2012 saw significant OBS reductions at all centers because of the enrollment suspension that lasted from January 28, 2013 through April 22, 2013. To address this issue, the Office of Job Corps issued Program Information Notice 13–14 on September 10, 2013 stating that the January 31, 2013, PY–COBS report will be used as the basis for assessing center-level OBS performance for PY 2012. Therefore, the Department will use the January 31, 2013 PY–COBS report as the PY 2012 OBS report for calculating each center's OBS rating.

The original OBS ratings for each of the five program years were normalized at one hundred percent (100%) so as to be consistent with the OMS and FCI data. The calculation formula for the final methodology also contains the normalized data for OBS.

As with the performance criterion, the revised methodology weights each of the five program year's OBS data, with recent years receiving more weight to incorporate performance improvement. The year-by-year weighted structure is as follows:

PY 2012	30%
PY 2011	25%
PY 2010	20%
PY 2009	15%
PY 2008	10%
Total:	100%

The calculation formula for five-year OBS for the final closure methodology is as follows:

Center's Five-Year Weighted Average Cumulative OBS × 5% = Overall OBS Rating

3. Facility Condition and Physical Plant

For a program that operates 24 hours per day, seven days per week and is primarily residential, facility conditions are important. The quality of Job Corps' residential and learning facilities has a direct impact on students' experiences and, ultimately, their educational achievement. Each Job Corps center is a fully operational complex with academic and career technical training facilities, dining and recreation buildings, administrative offices, and residence halls (with the exception of solely non-residential facilities), including the surrounding owned or leased property on which the center is located.

Job Corps receives an annual appropriation for Construction, Rehabilitation, and Acquisition (CRA) that is used to improve facility conditions at Job Corps centers. To properly manage the program's facility and condition needs, Job Corps uses a Facility Condition Index (FCI) and gives each center an annual rating. This rating, which is expressed as a percentage, accounts for the value of a center's construction, rehabilitation, and repair backlog, as compared to the replacement value of the center's facilities. Facility condition affects the outcomes of the Job Corps program because good outcomes begin with facilities that contribute to a safe learning environment.

For this factor, the Department will evaluate each center's PY 2008–PY 2012 FCI, which takes into account all construction projects completed over the same five-year period as the other two factors.

DOL received a number of public comments stating that FCI is an inappropriate factor because it is not within the control of centers. Some further contend that an FCI score five years ago has no relevance to the current facility condition and whether a center should close or not.

We acknowledge that FCI, like OBS, is not entirely under the control of the centers. We considered this during development of the proposed closure methodology. Our intent of incorporating FCI was to include a factor that would capture and recognize the importance of significant capital investments that were made on particular centers. In addition, we determined that it is in the government's best interest to consider past facility investments and future investment needs as a factor in the consideration of any center's possible closure. We have decided to lessen the impact of this factor. Accordingly, as a result of the public comments received, we reduced the FCI weighting factor from 10% to 5%. Additionally, because FCI is already expressed on a 100-point scale, normalization of this data was not necessary. We also believe that a single year's FCI value cannot adequately reflect the Government's continued capital investment in a center and a center's efforts to maintain its buildings and facilities. Therefore, we will continue to use five years' FCI results for this evaluation.

As with the performance and OBS criteria, the final methodology applies weights to each of the five program year's FCI data, with recent years receiving more weight to incorporate any recent improvement. The year-by-year weighted structure is as follows:

PY 2012	30%
PY 2011	25%
PY 2010	20%
PY 2009	15%
PY 2008	10%
Total:	100%

The calculation formula for FCI for the final closure methodology is as follows:

Center's Five-Year Weighted Average FCI Rating × 5% = Overall FCI Rating

Ranking Centers for Closure

Applying the factors above will yield an overall rating for each center. This will allow DOL to create a list that ranks all centers, with the lowest performing centers receiving the lowest ratings. The calculation formula for the revised methodology is as follows:

Overall Performance Rating (90%)	+	Overall OBS Rating (5%)	+	Overall FCI Rating (5%)	=	Overall Rating for Primary Selection Factors

4. Other Considerations Included in the Closure Methodology

a. Job Corps Services in Each State, Puerto Rico, and the District of Columbia

In addition to the above three primary criteria, another consideration in the closure methodology explained in the January 10, 2013 **Federal Register** Notice involved an adequate level of Job Corps services remaining available in each state (Job Corps' goal is to have at least one center operating in each state), the Commonwealth of Puerto Rico, and the District of Columbia. One comment stated that this factor would allow center location to trump center performance, and it stated that local and regional labor markets do not conform to state boundaries. We continue to believe that it is in the best interest of the Job Corps' target population to ensure that this model is available in each state. Therefore, in making the decision about which centers to close, we will maintain at least one Job Corps center in each state, the Commonwealth of Puerto Rico, and the District of Columbia, and will take into consideration whether a center's closure would have a disproportionate impact on students in any one state.

b. Sufficiency of Data Available To Evaluate Center Performance

The centers in Ottumwa, Milwaukee, Pinellas, Denison, Long Beach, Gulfport and New Orleans are not included for consideration for closure. For each center, there is not enough OMS data to evaluate the center's performance over the full five-year period for varying reasons. Those reasons include: New centers opened later during the five-year period (Ottumwa and Milwaukee); exclusion from OMS evaluation due to the Center for Excellence (CFE) pilot status (Pinellas County, Denison, and Long Beach); and center closure due to Hurricane Katrina (Gulf Port and New Orleans). No public comments were received regarding application of this criterion.

c. Indication of Significant Recent Performance Improvement

The Department has determined that performing in the top half of centers in PY 2013 should be taken as evidence of significant recent performance improvement. Therefore, we propose that a center will not be considered for closure if there is evidence of significant improvement in a center's available PY 2013 performance data. This consideration was not previously proposed, and therefore, we invite public comment on it.

d. Job Corps' Commitment to Diversity

The closure methodology will also consider Job Corps' commitment to diversity. Job Corps currently serves a diverse student population and remains committed to serving disadvantaged youth from all backgrounds. In making final closure decisions, we will consider whether a center's closure would result in a significant reduction in student diversity within the overall Job Corps system. No public comments were received regarding Job Corps' commitment to diversity or application of this criterion.

The Department will accept comments for 20 days, beginning on the date of publication of this Notice. After we have received and analyzed any comments, we will finalize the methodology for center closure.

The Department will implement the selection and closure process pursuant to the center closure requirements outlined in the WIA at section 159(g) and as stipulated in the DOL/USDA Interagency Agreement. We anticipate that it will take several months to execute closure of a center, and possibly longer for centers with larger student populations or Civilian Conservation Centers (CCCs).

The Process for Closing Job Corps Centers, as Outlined in the Workforce Investment Act

We will ensure that our process for closing Job Corps centers will follow the requirements of Section 159(g) of the WIA, which include the following:

- The proposed decision to close a particular center is announced in advance to the general public through publication in the **Federal Register** or other appropriate means;
- a reasonable comment period, not to exceed 30 days, is established for interested individuals to submit written comments to the Secretary once a decision to close a particular center is made; and
- the Member of Congress who represents the district in which such center is located is notified within a reasonable period of time in advance of any final decision to close the center.

Portia Wu,

Assistant Secretary for Employment and Training.

[FR Doc. 2014–15275 Filed 6–27–14; 8:45 am]

BILLING CODE 4510–FT–P

DEPARTMENT OF LABOR

Employment and Training Administration

[TA–W–83,321]

LATA Environmental Services of Kentucky, LLC, a Wholly Owned Subsidiary of Los Alamos Technical Associates, Inc., Kevil, Kentucky; Notice of Revised Determination on Reconsideration

On January 24, 2014, the Department of Labor issued a Notice of Negative Determination Regarding Eligibility to Apply for Worker Adjustment Assistance applicable to workers and former workers of LATA Environmental Services of Kentucky, LLC, a wholly owned subsidiary of Los Alamos Technical Associates, Inc., Kevil, Kentucky (subject firm). The Department's Notice was published in the **Federal Register** on February 12, 2014 (79 FR 8508). Workers at the subject firm were engaged in employment related to the supply of environmental remediation services. The worker group does not include on-site leased workers.

In an application dated March 11, 2014, the United Steel, paper and Forestry, Rubber, Manufacturing, Energy, Allied-Industrial and Service Workers International Union requested administrative reconsideration of the negative determination applicable to workers and former workers of the subject firm. The request for reconsideration alleges that workers at the subject firm are eligible to apply for Trade Adjustment Assistance (TAA) under Section 222(b) of the Trade Act, 19 U.S.C. 2272(b).

Previously-submitted information revealed that a significant number or proportion of the workers in the subject firm have been totally or partially separated or threatened by such separation. Therefore, the Department determines that Section 222(b)(1) has been met.

A careful review of administrative record, the request for reconsideration, and publically-available information

confirmed that the subject is a Supplier, as defined by Section 222(c) of the Trade Act, to a firm that employed a worker group eligible to apply for TAA under Section 222(a) of the Act, and that the supply of services is related to the production of the article that was the basis of the primary certification. Therefore, the Department determines that Section 222(b)(2) has been met.

Conclusion

After careful review, I determine that workers and former workers of the subject firm, who are engaged in employment related to the supply of environmental remediation services, meet the worker group certification criteria under Section 222(b) of the Act, 19 U.S.C. 2272(b). In accordance with Section 223 of the Act, 19 U.S.C. 2273, I make the following certification:

All workers of LATA Environmental Services of Kentucky, LLC, a wholly owned subsidiary of Los Alamos Technical Associates, Inc., Kevil, Kentucky, who became totally or partially separated from employment on or after December 20, 2012, through two years from the date of this revised certification, and all workers in the group threatened with total or partial separation from employment on date of certification through two years from the date of certification, are eligible to apply for adjustment assistance under Chapter 2 of Title II of the Trade Act of 1974, as amended.

Signed in Washington, DC, this 11th day of June 2014.

Del Min Amy Chen,

Certifying Officer, Office of Trade Adjustment Assistance.

[FR Doc. 2014–15189 Filed 6–27–14; 8:45 am]

BILLING CODE 4510–FN–P

DEPARTMENT OF LABOR

Employment and Training Administration

Notice of Determinations Regarding Eligibility To Apply for Worker Adjustment Assistance

In accordance with Section 223 of the Trade Act of 1974, as amended (19 U.S.C. 2273) the Department of Labor herein presents summaries of determinations regarding eligibility to apply for trade adjustment assistance for workers by (TA–W) number issued during the period of June 9, 2014 through June 13, 2014.

In order for an affirmative determination to be made for workers of a primary firm and a certification issued regarding eligibility to apply for worker adjustment assistance, each of the group eligibility requirements of Section 222(a) of the Act must be met.

I. Under Section 222(a)(2)(A), the following must be satisfied:

(1) A significant number or proportion of the workers in such workers' firm have become totally or partially separated, or are threatened to become totally or partially separated;

(2) the sales or production, or both, of such firm have decreased absolutely; and

(3) One of the following must be satisfied:

(A) Imports of articles or services like or directly competitive with articles produced or services supplied by such firm have increased;

(B) imports of articles like or directly competitive with articles into which one or more component parts produced by such firm are directly incorporated, have increased;

(C) imports of articles directly incorporating one or more component parts produced outside the United States that are like or directly competitive with imports of articles incorporating one or more component parts produced by such firm have increased;

(D) imports of articles like or directly competitive with articles which are produced directly using services supplied by such firm, have increased; and

(4) the increase in imports contributed importantly to such workers' separation or threat of separation and to the decline in the sales or production of such firm; or

II. Section 222(a)(2)(B) all of the following must be satisfied:

(1) a significant number or proportion of the workers in such workers' firm have become totally or partially separated, or are threatened to become totally or partially separated;

(2) One of the following must be satisfied:

(A) there has been a shift by the workers' firm to a foreign country in the production of articles or supply of services like or directly competitive with those produced/supplied by the workers' firm;

(B) there has been an acquisition from a foreign country by the workers' firm of articles/services that are like or directly competitive with those produced/supplied by the workers' firm; and

(3) the shift/acquisition contributed importantly to the workers' separation or threat of separation.

In order for an affirmative determination to be made for adversely affected workers in public agencies and a certification issued regarding eligibility to apply for worker adjustment assistance, each of the group eligibility requirements of Section 222(b) of the Act must be met.

(1) a significant number or proportion of the workers in the public agency have become totally or partially separated, or are threatened to become totally or partially separated;

(2) the public agency has acquired from a foreign country services like or directly competitive with services which are supplied by such agency; and

(3) the acquisition of services contributed importantly to such workers' separation or threat of separation.

In order for an affirmative determination to be made for adversely affected secondary workers of a firm and a certification issued regarding eligibility to apply for worker adjustment assistance, each of the group eligibility requirements of Section 222(c) of the Act must be met.

(1) a significant number or proportion of the workers in the workers' firm have become totally or partially separated, or are threatened to become totally or partially separated;

(2) the workers' firm is a Supplier or Downstream Producer to a firm that employed a group of workers who received a certification of eligibility under Section 222(a) of the Act, and such supply or production is related to the article or service that was the basis for such certification; and

(3) either—

(A) the workers' firm is a supplier and the component parts it supplied to the firm described in paragraph (2) accounted for at least 20 percent of the production or sales of the workers' firm; or

(B) a loss of business by the workers' firm with the firm described in paragraph (2) contributed importantly to the workers' separation or threat of separation.

In order for an affirmative determination to be made for adversely affected workers in firms identified by the International Trade Commission and a certification issued regarding eligibility to apply for worker adjustment assistance, each of the group eligibility requirements of Section 222(f) of the Act must be met.

(1) the workers' firm is publicly identified by name by the International Trade Commission as a member of a domestic industry in an investigation resulting in—

(A) an affirmative determination of serious injury or threat thereof under section 202(b)(1);

(B) an affirmative determination of market disruption or threat thereof under section 421(b)(1); or

(C) an affirmative final determination of material injury or threat thereof under section 705(b)(1)(A) or 735(b)(1)(A) of the Tariff Act of 1930 (19 U.S.C. 1671d(b)(1)(A) and 1673d(b)(1)(A));

(2) the petition is filed during the 1-year period beginning on the date on which—

(A) a summary of the report submitted to the President by the International Trade Commission under section 202(f)(1) with respect to the affirmative determination described in paragraph (1)(A) is published in the **Federal Register** under section 202(f)(3); or

(B) notice of an affirmative determination described in subparagraph (1) is published in the **Federal Register**; and

(3) the workers have become totally or partially separated from the workers' firm within—

(A) the 1-year period described in paragraph (2); or

(B) notwithstanding section 223(b)(1), the 1-year period preceding the 1-year period described in paragraph (2).

Affirmative Determinations for Worker Adjustment Assistance

The following certifications have been issued. The date following the company name and location of each determination references the impact date for all workers of such determination.

The following certifications have been issued. The requirements of Section 222(c) (supplier to a firm whose workers are certified eligible to apply for TAA) of the Trade Act have been met.

TA–W No.	Subject firm	Location	Impact date
83,321	Lata Environmental Services of Kentucky, LLC, Los Alamos Technical Associates, Inc.	Kevil, KY	December 20, 2012.

I hereby certify that the aforementioned determinations were issued during the period of June 9, 2014 through June 13, 2014. These determinations are available on the Department's Web site *www.doleta.gov/tradeact/taa/taa_search_form.cfm* under the searchable listing of determinations or by calling the Office of Trade Adjustment Assistance toll free at 888–365–6822.

Signed at Washington, DC, this 19th day of June 2014.

Del Min Amy Chen,

Certifying Officer, Office of Trade Adjustment Assistance.

[FR Doc. 2014–15188 Filed 6–27–14; 8:45 am]

BILLING CODE 4510–FN–P

DEPARTMENT OF LABOR

Employment and Training Administration

[TA–W–85,075]

Duro Textiles, LLC, Finishing and Print Plants, A Wholly Owned Subsidary of Patriarch Partners, LLC, Including On-Site Leased Workers From LT Staffing and Able Associates, Fall River, Massachusetts; Notice of Negative Determination Regarding Application for Reconsideration

By application dated May 5, 2014, a company official requested administrative reconsideration of the Department of Labor's negative determination regarding eligibility to apply for worker adjustment assistance, applicable to workers and former workers of Duro Textiles, LLC, Finishing & Print Plants, a wholly owned subsidiary of Patriarch Partners, LLC, including on-site leased workers from LT Staffing and Able Associates, Fall River, Massachusetts (subject firm). The negative determination was signed on April 8, 2014, and the Department's Notice of determination was published in the **Federal Register** on April 29, 2014 (79 FR 24018).

Workers of the subject firm are engaged in activities related to the production of fabrics.

Pursuant to 29 CFR 90.18(c) reconsideration may be granted under the following circumstances:

(1) If it appears on the basis of facts not previously considered that the determination complained of was erroneous;

(2) If it appears that the determination complained of was based on a mistake in the determination of facts not previously considered; or

(3) If in the opinion of the Certifying Officer, a mis-interpretation of facts or of the law justified reconsideration of the decision.

The negative determination of the Trade Adjustment Assistance (TAA) petition was based on the Department's finding of no increased company or customer imports of like or directly competitive articles during the relevant period and no shift of production to a foreign country by the subject firm. During the investigation, the Department conducted a survey of the subject firm and its major declining customers of import activity, and had conducted a survey on a major lost bid on a contract. In addition, the Department determined that a secondary worker certification could not be issued because the criteria set forth in Section 222(b) of the Trade Act of 1974, as amended (the Act), was not met.

The request for reconsideration asserts that Section 222(a)(1) and Section 222(a)(2)(A)(1) of the Act have been met, and, therefore, the workers are eligible to apply for TAA.

The negative determination was not based on the Department's finding that the employment and sales/production decline criteria was not met; rather, the subject firm did not shift fabric production to a foreign country, imports of articles like or directly competitive with the fabric produced by the workers did not increase during the relevant period, and the subject firm is neither a Supplier or Producer under Section 222(c) of the Act.

The petitioner did not supply facts not previously considered; nor provide additional documentation indicating that there was either (1) a mistake in the determination of facts not previously considered or (2) a misinterpretation of facts or of the law justifying reconsideration of the initial determination. Based on these findings, the Department determines that 29 CFR 90.18(c) has not been met.

Conclusion

After careful review of the application and investigative findings, I conclude that there has been no error or misinterpretation of the law or of the facts which would justify reconsideration of the Department of Labor's prior decision. Accordingly, the application is denied.

Signed in Washington, DC, this 13th day of June, 2014.

Del Min Amy Chen,

Certifying Officer, Office of Trade Adjustment Assistance.

[FR Doc. 2014–15190 Filed 6–27–14; 8:45 am]

BILLING CODE 4510–FN–P

DEPARTMENT OF LABOR

Employment and Training Administration

Investigations Regarding Eligibility To Apply for Worker Adjustment Assistance

Petitions have been filed with the Secretary of Labor under Section 221(a) of the Trade Act of 1974 (''the Act'') and are identified in the Appendix to this notice. Upon receipt of these petitions, the Director of the Office of Trade Adjustment Assistance, Employment and Training Administration, has instituted investigations pursuant to Section 221(a) of the Act.

The purpose of each of the investigations is to determine whether the workers are eligible to apply for adjustment assistance under Title II, Chapter 2, of the Act. The investigations will further relate, as appropriate, to the determination of the date on which total or partial separations began or threatened to begin and the subdivision of the firm involved.

The petitioners or any other persons showing a substantial interest in the subject matter of the investigations may request a public hearing, provided such request is filed in writing with the Director, Office of Trade Adjustment Assistance, at the address shown below, not later than July 10, 2014.

Interested persons are invited to submit written comments regarding the subject matter of the investigations to the Director, Office of Trade Adjustment Assistance, at the address shown below, not later than July 10, 2014.

The petitions filed in this case are available for inspection at the Office of the Director, Office of Trade Adjustment Assistance, Employment and Training Administration, U.S. Department of Labor, Room N–5428, 200 Constitution Avenue NW., Washington, DC 20210.

Signed at Washington, DC, this 19th day of June 2014.

Del Min Amy Chen,

Certifying Officer, Office of Trade Adjustment Assistance.

APPENDIX

[12 TAA petitions instituted between 6/9/14 and 6/13/14]

TA–W No.	Subject firm (petitioners)	Location	Date of institution	Date of petition
85364	New Process Steel (Workers)	El, Paso, TX	06/09/14	06/06/14
85365	OSRAM SYLVANIA (Company)	York, PA	06/09/14	06/09/14
85366	Luminus Devices (State/One-Stop)	Woburn, MA	06/09/14	06/05/14
85367	TE Connectivity (Company)	North Bennington, VT	06/09/14	06/05/14
85368	FEI Company (Company)	Delmont, PA	06/10/14	06/09/14
85369	ProCo Sound Company (Company)	Kalamazoo, MI	06/10/14	06/09/14
85370	Walton Hills Stamping Plant, Ford Motor Company (Company)	Walton Hills, OH	06/11/14	06/01/14
85371	Contacts Metals and Welding Inc. (Union)	Indianapolis, IN	06/12/14	06/11/14
85372	Curtiss Wright (Company)	South Bend, IN	06/12/14	06/11/14
85373	GE Industrial Solutions (State/One-Stop)	Plainville, CT	06/12/14	06/11/14
85374	Grass Valley, A Belden Brand (Company)	Grass Valley, CA	06/13/14	06/12/14
85375	Caterpillar, Inc. (Workers)	Pearisburg, VA	06/13/14	06/12/14

[FR Doc. 2014–15186 Filed 6–27–14; 8:45 am]

BILLING CODE 4510–FN–P

DEPARTMENT OF LABOR

Employment and Training Administration

Notice of Determinations Regarding Eligibility To Apply for Worker Adjustment Assistance and Alternative Trade Adjustment Assistance

In accordance with Section 223 of the Trade Act of 1974, as amended (19 U.S.C. 2273) the Department of Labor herein presents summaries of determinations regarding eligibility to apply for trade adjustment assistance for workers (TA–W) number and alternative trade adjustment assistance (ATAA) by (TA–W) number issued during the period of June 9, 2014 through June 13, 2014.

In order for an affirmative determination to be made for workers of a primary firm and a certification issued regarding eligibility to apply for worker adjustment assistance, each of the group eligibility requirements of Section 222(a) of the Act must be met.

I. Section (a)(2)(A) all of the following must be satisfied:

A. A significant number or proportion of the workers in such workers' firm, or an appropriate subdivision of the firm, have become totally or partially separated, or are threatened to become totally or partially separated;

B. the sales or production, or both, of such firm or subdivision have decreased absolutely; and

C. increased imports of articles like or directly competitive with articles produced by such firm or subdivision have contributed importantly to such workers' separation or threat of separation and to the decline in sales or production of such firm or subdivision; or

II. Section (a)(2)(B) both of the following must be satisfied:

A. A significant number or proportion of the workers in such workers' firm, or an appropriate subdivision of the firm, have become totally or partially separated, or are threatened to become totally or partially separated;

B. there has been a shift in production by such workers' firm or subdivision to a foreign country of articles like or directly competitive with articles which are produced by such firm or subdivision; and

C. One of the following must be satisfied:

1. The country to which the workers' firm has shifted production of the articles is a party to a free trade agreement with the United States;

2. the country to which the workers' firm has shifted production of the articles to a beneficiary country under the Andean Trade Preference Act, African Growth and Opportunity Act, or the Caribbean Basin Economic Recovery Act; or

3. there has been or is likely to be an increase in imports of articles that are like or directly competitive with articles which are or were produced by such firm or subdivision.

Also, in order for an affirmative determination to be made for secondarily affected workers of a firm and a certification issued regarding eligibility to apply for worker adjustment assistance, each of the group eligibility requirements of Section 222(b) of the Act must be met.

(1) significant number or proportion of the workers in the workers' firm or an appropriate subdivision of the firm have become totally or partially separated, or are threatened to become totally or partially separated;

(2) the workers' firm (or subdivision) is a supplier or downstream producer to a firm (or subdivision) that employed a group of workers who received a certification of eligibility to apply for trade adjustment assistance benefits and such supply or production is related to the article that was the basis for such certification; and

(3) either—

(A) the workers' firm is a supplier and the component parts it supplied for the firm (or subdivision) described in paragraph (2) accounted for at least 20 percent of the production or sales of the workers' firm; or

(B) a loss or business by the workers' firm with the firm (or subdivision) described in paragraph (2) contributed importantly to the workers' separation or threat of separation.

In order for the Division of Trade Adjustment Assistance to issue a certification of eligibility to apply for Alternative Trade Adjustment Assistance (ATAA) for older workers, the group eligibility requirements of Section 246(a)(3)(A)(ii) of the Trade Act must be met.

1. Whether a significant number of workers in the workers' firm are 50 years of age or older.

2. Whether the workers in the workers' firm possess skills that are not easily transferable.

3. The competitive conditions within the workers' industry (i.e., conditions within the industry are adverse).

Affirmative Determinations for Worker Adjustment Assistance

The following certifications have been issued. The date following the company name and location of each determination references the impact date for all workers of such determination.

None.

Affirmative Determinations for Worker Adjustment Assistance and Alternative Trade Adjustment Assistance

The following certifications have been issued. The date following the company name and location of each determination references the impact date for all workers of such determination.

The following certifications have been issued. The requirements of Section 222(a)(2)(A) (increased imports) and Section 246(a)(3)(A)(ii) of the Trade Act have been met.

85,216, Dennis Uniform Manufacturing Company, Portland, Oregon, April 8, 2013.

85,315, Souriau USA, Inc., York, Pennsylvania, May 16, 2013.

85,332, Stromgren Athletics, Inc., Hays, Kansas. May 22, 2013.

Negative Determinations for Alternative Trade Adjustment Assistance

In the following cases, it has been determined that the requirements of 246(a)(3)(A)(ii) have not been met for the reasons specified.

None.

Negative Determinations for Worker Adjustment Assistance and Alternative Trade Adjustment Assistance

In the following cases, the investigation revealed that the eligibility criteria for worker adjustment assistance have not been met for the reasons specified.

Because the workers of the firm are not eligible to apply for TAA, the workers cannot be certified eligible for ATAA.

The investigation revealed that criteria (a)(2)(A)(I.A.) and (a)(2)(B)(II.A.) (employment decline) have not been met.

85,285, Wave Accounting, Inc. (Delaware), Wilmington, Delaware.

85,285A, Wave Accounting, Inc. (Delaware), Webster, New York.

The workers' firm does not produce an article as required for certification under Section 222 of the Trade Act of 1974.

85,291, ProLogix Distribution Services, East, Spring Arbor, Michigan.

85,331, Music Group Services US, Bothell, Washington.

Determinations Terminating Investigations of Petitions for Worker Adjustment Assistance

After notice of the petitions was published in the **Federal Register** and on the Department's Web site, as required by Section 221 of the Act (19 U.S.C. 2271), the Department initiated investigations of these petitions.

The following determinations terminating investigations were issued because the petitioner has requested that the petition be withdrawn.

85,329, Caterpillar, Inc., Fountain Inn, South Carolina.

85,329A, Caterpillar, Inc., Fountain Inn, South Carolina.

85,330, Wiley X, Livermore, California.

The following determinations terminating investigations were issued in cases where these petitions were not filed in accordance with the requirements of 29 CFR 90.11. Every petition filed by workers must be signed by at least three individuals of the petitioning worker group. Petitioners separated more than one year prior to the date of the petition cannot be covered under a certification of a petition under Section 223(b), and therefore, may not be part of a petitioning worker group. For one or more of these reasons, these petitions were deemed invalid.

85,360, LustreColor, Inc., Canton, Massachusetts.

I hereby certify that the aforementioned determinations were issued during the period of June 9, 2014 through June 13, 2014. These determinations are available on the Department's Web site *www.doleta.gov/tradeact/taa/taa_search_form.cfm* under the searchable listing of determinations or by calling the Office of Trade Adjustment Assistance toll free at 888–365–6822.

Signed at Washington, DC, this 19th day of June, 2014.

Del Min Amy Chen,

Certifying Officer, Office of Trade Adjustment Assistance.

[FR Doc. 2014–15187 Filed 6–27–14; 8:45 am]

BILLING CODE 4510–FN–P

DEPARTMENT OF LABOR

Occupational Safety and Health Administration

Agency Information Collection Activities: Announcement of the Office of Management and Budget (OMB) Control Numbers Under the Paperwork Reduction Act

AGENCY: Occupational Safety and Health Administration (OSHA), Labor.

ACTION: Notice; announcement of OMB approval of information collection requirements.

SUMMARY: The Occupational Safety and Health Administration announces that the Office of Management and Budget (OMB) extended its approval for a number of information collection requirements found in sections of 29 CFR parts 1910 and 1926, and other regulations and requirements. OSHA sought approval of these requirements under the Paperwork Reduction Act of 1995 (PRA–95), and, as required by that Act, is announcing the approval numbers and expiration dates for these requirements.

DATES: This notice is effective June 30, 2014.

FOR FURTHER INFORMATION CONTACT: Theda Kenney or Todd Owen,

Directorate of Standards and Guidance, Occupational Safety and Health Administration, U.S. Department of Labor, Room N–3609, 200 Constitution Avenue NW., Washington, DC 20210, telephone: (202) 693–2222.

SUPPLEMENTARY INFORMATION: In a series of **Federal Register** notices, the Agency announced its requests to OMB to renew their approvals for various information collection (paperwork) requirements in its safety and health standards pertaining to general industry and the construction industry (i.e., 29 CFR parts 1910 and 1926), procedures for conflict of interest, OSHA's student data forms, regulations containing procedures for handling of retaliation complaints, and requirements for the Occupational Safety and Health Administration Training Institute Education Centers Program and Outreach Training Program. In these **Federal Register** announcements, the Agency provided 60-day comment periods for the public to respond to OSHA's burden hour and cost estimates.

In accord with PRA–95 (44 U.S.C. 3501–3520), OMB renewed its approval for these information collection requirements, and assigned OMB control numbers to these requirements. The table below provides the following information for each of these information collection requirements approved by OMB: The title of the **Federal Register** notice; the **Federal Register** reference (date, volume, and leading page); OMB's Control Number; and the new expiration date.

Title of the information collection request	Date of **Federal Register** Publication, **Federal Register** reference, and OSHA Docket No.	OMB Control No.	Expiration date
Access to Employee Exposure and Medical Records (29 CFR 1910.1020).	09/09/2013, 78 FR 55114, Docket No. OSHA–2009–0043.	1218–0065	02/28/2017
Aerial Lifts in Construction (29 CFR 1926.453)	10/30/2013, 78 FR 64982, Docket No. OSHA–2009–0045.	1218–0216	02/28/2017
Asbestos in General Industry (29 CFR 1910.1001)	06/07/2013, 78 FR 34406, Docket No. OSHA–2010–0018.	1218–0133	02/28/2017
Conflict of Interest (COI) and Disclosure Form (OSHA 7)	07/16/2013, 78 FR 42549, Docket No. OSHA–2009–0042.	1218–0255	02/28/2017
Construction Fall Protection Systems Criteria and Practices (29 CFR 1925.502), and Training Requirements (29 CFR 1926.503).	09/27/2013, 78 FR 59725, Docket No. OSHA–2010–0008.	1218–0197	02/28/2017
Cranes and Derricks in Construction (29 CFR part 1926, subpart CC).	09/13/2013, 78 FR 56742, Docket No. OSHA–2013–0021.	1218–0261	02/28/2017
Crawler, Locomotive, and Truck Cranes (29 CFR 1910.180)	06/05/2013, 78 FR 33860, Docket No. OSHA–2010–0015.	1218–0221	02/28/2017
Derricks (29 CFR 1910.181)	04/09/2013, 78 FR 21157, Docket No. 2010–0016.	1218–0222	10/31/2016
Dip Tanks (Dipping and Coating Operations—Additional Requirements for Special Operations) (29 CFR 1910.126(g)(4)).	04/09/2013, 78 FR 21159, Docket No. OSHA–2010–0020.	1218–0237	10/31/2016
Formaldehyde (29 CFR 1910.1048)	08/23/2013, 78 FR 52567, Docket No. OSHA–2009–0041.	1218–0145	02/28/2017
Nationally Recognized Testing Laboratory (NRTL) (Definition, and Requirements) (29 CFR 1910.7).	10/02/2013, 78 FR 60898, Docket No. OSHA–2010–0007.	1218–0147	02/28/2017
Noise Exposure (29 CFR 1910.95)	07/30/2013, 78 FR 45981, Docket No. OSHA–2010–0017.	1218–0048	02/28/2017
Presence Sensing Device Initiation (PSDI) (29 CFR 1910.217(h))	04/09/2013, 78 FR 21155, Docket No. OSHA–2010–0009.	1218–0143	04/30/2017
Regulations Containing Procedures for Handling of Retaliation Complaints.	01/17/2013, 78 FR 3918, Docket No. OSHA–2012–0026.	1218–0236	07/31/2016
Requirements for the Occupational Safety and Health Administration Training Institute Education Centers Program and Outreach Training Program.	08/05/2013, 78 FR 47419, Docket No. OSHA–2009–0022.	1218–0262	02/28/2017
Student Data Form (OSHA Form 182)	08/23/2013, 78 FR 52565, Docket No. OSHA–2010–0022.	1218–0172	02/28/2017
Welding, Cutting, and Brazing (29 CFR part 1910, subpart Q)	08/28/2013, 78 FR 53159, Docket No. OSHA–2010–0037.	1218–0207	02/28/2017

In accord with 5 CFR 1320.5(b), an agency cannot conduct, sponsor, or require a response to a collection of information unless the collection displays a valid OMB control number and the agency informs respondents that they need not respond to the collection of information unless it displays a valid OMB control number.

Authority and Signature

David Michaels, Ph.D., MPH, Assistant Secretary of Labor for Occupational Safety and Health, directed the preparation of this notice. The authority for this notice is 44 U.S.C. 3506 et seq. and Secretary of Labor's Order No. 1–2012 (77 FR 3912).

Signed at Washington, DC, on June 25, 2014.

David Michaels,

Assistant Secretary of Labor for Occupational Safety and Health.

[FR Doc. 2014–15236 Filed 6–27–14; 8:45 am]

BILLING CODE 4510–26–P

DEPARTMENT OF LABOR

Occupational Safety and Health Administration

[Docket No. OSHA–2011–0064]

Forging Machines; Extension of the Office of Management and Budget's (OMB) Approval of Information Collection (Paperwork) Requirements

AGENCY: Occupational Safety and Health Administration (OSHA), Labor.

ACTION: Request for public comments.

SUMMARY: OSHA solicits public comments concerning its proposal to extend OMB approval of the information collection requirements contained in its standard on Forging Machines (29 CFR 1910.218). The paperwork provisions of the Forging Machines Standard specify requirements for developing and maintaining inspection records and for identifying manually operated valves and switches.

DATES: Comments must be submitted (postmarked, sent, or received) by August 29, 2014.

ADDRESSES:

Electronically: You may submit comments and attachments electronically at *http://www.regulations.gov*, which is the Federal eRulemaking Portal. Follow the instructions online for submitting comments.

Facsimile: If your comments, including attachments, are not longer than 10 pages you may fax them to the OSHA Docket Office at (202) 693–1648.

Mail, hand delivery, express mail, messenger, or courier service: When using this method, you must submit a copy of your comments and attachments to the OSHA Docket Office, Docket No. OSHA–2011–0064, U.S. Department of Labor, Occupational Safety and Health Administration, Room N–2625, 200 Constitution Avenue NW., Washington, DC 20210. Deliveries (hand, express mail, messenger, and courier service) are accepted during the Department of Labor's and Docket Office's normal business hours, 8:15 a.m. to 4:45 p.m., e.t.

Instructions: All submissions must include the Agency name and the OSHA docket number (OSHA–2011–0064) for the Information Collection Request (ICR). All comments, including any personal information you provide, are placed in the public docket without change and may be made available online at *http://www.regulations.gov.* For further information on submitting comments, see the ''Public Participation'' heading in the section of this notice titled **SUPPLEMENTARY INFORMATION**.

Docket: To read or download comments or other material in the docket, go to *http://www.regulations.gov* or the OSHA Docket Office at the address above. All documents in the docket (including this **Federal Register** notice) are listed in the *http://www.regulations.gov* index; however, some information (e.g., copyrighted material) is not publicly available to read or download from the Web site. All submissions, including copyrighted material, are available for inspection and copying at the OSHA Docket Office. You may also contact Theda Kenney at the address below to obtain a copy of the ICR.

FOR FURTHER INFORMATION CONTACT: Theda Kenney or Todd Owen, Directorate of Standards and Guidance, OSHA, U.S. Department of Labor, Room N–3609, 200 Constitution Avenue NW., Washington, DC 20210; telephone (202) 693–2222.

SUPPLEMENTARY INFORMATION:

I. Background

The Department of Labor, as part of its continuing effort to reduce paperwork and respondent (i.e., employer) burden, conducts a preclearance consultation program to provide the public with an opportunity to comment on proposed and continuing information collection requirements in accord with the Paperwork Reduction Act of 1995 (PRA–95)(44 U.S.C. 3506(c)(2)(A)). This program ensures that information is in the desired format, reporting burden (time and costs) is minimal, collection instruments are clearly understood, and OSHA's estimate of the information collection burden is accurate. The Occupational Safety and Health Act of 1970 (the OSH Act) (29 U.S.C. 651 et seq.) authorizes information collection by employers as necessary or appropriate for enforcement of the Act or for developing information regarding the causes and prevention of occupational injuries, illnesses, and accidents (29 U.S.C. 657). The OSH Act also requires that OSHA obtain such information with minimum burden upon employers, especially those operating small businesses, and to reduce to the maximum extent feasible unnecessary duplication of efforts in obtaining information (29 U.S.C. 657).

The following sections describe who uses the information collected under each requirement, as well as how they use it. The purpose of these requirements is to reduce workers' risk of death or serious injury by ensuring that forging machines used by them are in safe operating condition, and that workers are able to clearly and properly identify manually operated valves and switches.

Inspection of Forging Machines, Guards, and Point-of-Operation Protection Devices (paragraphs (a)(2)(i) and (a)(2)(ii)). Paragraph (a)(2)(i) requires employers to establish periodic and regular maintenance safety checks and to develop and maintain a certification record of each inspection. The certification record must include the date of the inspection, the signature of the person who performed the inspection, and the serial number (or other identifier) of the forging machine inspected. Under paragraph (a)(2)(ii), employers are to schedule regular and frequent inspections of guards and point-of-operation protection devices and to prepare a certification record of each inspection that contains the date of the inspection, the signature of the person who performed the inspection, and the serial number (or other identifier) of the equipment inspected. These inspection certification records provide assurance to employers, workers, and OSHA compliance officers that forging machines, guards, and point-of-operation protection devices have been inspected, and that they will operate properly and safely, thereby preventing impact injuries or death to workers during forging operations. These records also provide the most efficient means for OSHA compliance officers to determine that an employer is complying with the Forging Machines Standard.

Identification of Manually Controlled Valves and Switches (paragraphs (c), (h)(3), (i)(1) and (i)(2)). These paragraphs require proper and clear identification of manually operated valves and switches on presses, upsetters, boltheading equipment, and rivet-making machines, respectively. Marking valves and switches provide information to workers to help ensure that they operate the forging machines correctly and safely.

II. Special Issues for Comment

OSHA has a particular interest in comments on the following issues:

- Whether the proposed information collection requirements are necessary for the proper performance of the Agency's functions, including whether the information is useful;
- The accuracy of OSHA's estimate of the burden (time and costs) of the information collection requirements, including the validity of the methodology and assumptions used;
- The quality, utility, and clarity of the information collected; and
- Ways to minimize the burden on employers who must comply; for example, by using automated or other technological information collection and transmission techniques.

III. Proposed Actions

OSHA is requesting that OMB extend its approval of the information collection requirements contained in the Standard on Forging Machines (29 CFR 1910.218). The Agency is requesting to retain its current burden hour estimate of 187,264 hours associated with this

Standard. The Agency will summarize the comments submitted in response to this notice and will include this summary in the request to OMB.

Type of Review: Extension of a currently approved collection.

Title: Forging Machines (29 CFR 1910.218).

OMB Control Number: 1218–0228.

Affected Public: Business or other for-profits.

Number of Respondents: 27,700.

Number of Responses: 1,440,788.

Frequency of Responses: Bi-weekly.

Average Time per Response: Varies from 2 minutes (.03 hour) for an employer to disclose certification records to 8 minutes (.13 hour) for a manufacturing employee to conduct a biweekly inspection of each forging machine and guard or point-of-operation protection device.

Estimated Total Burden Hours: 187,264.

Estimated Cost Operation and Maintenance): $0.

IV. Public Participation—Submission of Comments on This Notice and Internet Access to Comments and Submissions

You may submit comments in response to this document as follows: (1) electronically at *http://www.regulations.gov*, which is the Federal eRulemaking Portal; (2) by facsimile (fax); or (3) by hard copy. All comments, attachments, and other material must identify the Agency name and the OSHA docket number (Docket No. OSHA–2011–0064) for the ICR. You may supplement electronic submissions by uploading document files electronically. If you wish to mail additional materials in reference to an electronic or facsimile submission, you must submit them to the OSHA Docket Office (see the section of this notice titled **ADDRESSES**). The additional materials must clearly identify your electronic comments by your name, date, and the docket number so the Agency can attach them to your comments.

Because of security procedures, the use of regular mail may cause a significant delay in the receipt of comments. For information about security procedures concerning the delivery of materials by hand, express delivery, messenger, or courier service, please contact the OSHA Docket Office at (202) 693–2350, (TTY (877) 889–5627).

Comments and submissions are posted without change at *http://www.regulations.gov.* Therefore, OSHA cautions commenters about submitting personal information such as social security numbers and date of birth. Although all submissions are listed in the *http://www.regulations.gov* index, some information (e.g., copyrighted material) is not publicly available to read or download from this Web site. All submissions, including copyrighted material, are available for inspection and copying at the OSHA Docket Office. Information on using the *http://www.regulations.gov* Web site to submit comments and access the docket is available at the Web site's ''User Tips'' link. Contact the OSHA Docket Office for information about materials not available from the Web site and for assistance in using the Internet to locate docket submissions.

V. Authority and Signature

David Michaels, Ph.D., MPH, Assistant Secretary of Labor for Occupational Safety and Health, directed the preparation of this notice. The authority for this notice is the Paperwork Reduction Act of 1995 (44 U.S.C. 3506 et seq.) and Secretary of Labor's Order No. 1–2012 (77 FR 3912).

Signed at Washington, DC, on June 25, 2014.

David Michaels,

Assistant Secretary of Labor for Occupational Safety and Health.

[FR Doc. 2014–15234 Filed 6–27–14; 8:45 am]

BILLING CODE 4510–26–P

DEPARTMENT OF LABOR

Occupational Safety and Health Administration

[Docket No. OSHA–2011–0056]

Voluntary Protection Programs Information; Extension of the Office of Management and Budget's (OMB) Approval of Information Collection (Paperwork) Requirements

AGENCY: Occupational Safety and Health Administration (OSHA), Labor.

ACTION: Request for public comments.

SUMMARY: OSHA solicits public comments concerning its proposal to extend the Office of Management and Budget's (OMB) approval of the information collection requirements contained in Voluntary Protection Programs Information.

DATES: Comments must be submitted (postmarked, sent, or received) by August 29, 2014.

ADDRESSES:

Electronically: You may submit comments and attachments electronically at *http://www.regulations.gov,* which is the Federal eRulemaking Portal. Follow the instructions online for submitting comments.

Facsimile: If your comments, including attachments, are not longer than 10 pages you may fax them to the OSHA Docket Office at (202) 693–1648.

Mail, hand delivery, express mail, messenger, or courier service: When using this method, you must submit a copy of your comments and attachments to the OSHA Docket Office, OSHA Docket No. OSHA–2011–0056, U.S. Department of Labor, Occupational Safety and Health Administration, Room N–2625, 200 Constitution Avenue NW., Washington, DC 20210. Deliveries (hand, express mail, messenger, and courier service) are accepted during the Department of Labor's and Docket Office's normal business hours, 8:15 a.m. to 4:45 p.m., e.t.

Instructions: All submissions must include the Agency name and OSHA docket number (OSHA–2011–0056) for the Information Collection Request (ICR). All comments, including any personal information you provide, are placed in the public docket without change, and may be made available online at *http://www.regulations.gov.* For further information on submitting comments see the ''Public Participation'' heading in the section of this notice titled **SUPPLEMENTARY INFORMATION.**

Docket: To read or download comments or other material in the docket, go to *http://www.regulations.gov* or the OSHA Docket Office at the address above. All documents in the docket (including this **Federal Register** notice) are listed in the *http://www.regulations.gov* index; however, some information (e.g., copyrighted material) is not publicly available to read or download from the Web site. All submissions, including copyrighted material, are available for inspection and copying at the OSHA Docket Office. You may also contact Theda Kenney at the address below to obtain a copy of the ICR.

FOR FURTHER INFORMATION CONTACT: Ylvonne Gonzalez, Acting Director, Office of Partnerships and Recognition, Directorate of Cooperative and State Programs, OSHA, U.S. Department of Labor, Room N–3700, 200 Constitution Avenue NW., Washington, DC 20210; telephone (202) 693–2213.

SUPPLEMENTARY INFORMATION:

I. Background

The Department of Labor, as part of its continuing effort to reduce paperwork and respondent (i.e., employer) burden, conducts a preclearance consultation program to provide the public with an

opportunity to comment on proposed and continuing information collection requirements in accord with the Paperwork Reduction Act of 1995 (PRA 95) (44 U.S.C. 3506(c)(2)(A)). This program ensures that information is in the desired format, reporting burden (time and costs) is minimal, collection instruments are clearly understood, and OSHA's estimate of the information collection burden is accurate. The Occupational Safety and Health Act of 1970 (the OSH Act) (29 U.S.C. 651 et seq.) authorizes information collection by employers as necessary or appropriate for enforcement of the OSH Act or for developing information regarding the causes and prevention of occupational injuries, illnesses, and accidents (29 U.S.C. 657). The OSH Act also requires that OSHA obtain such information with minimum burden upon employers, especially those operating small businesses, and to reduce to the maximum extent feasible unnecessary duplication of efforts in obtaining information (29 U.S.C. 657).

The Voluntary Protection Programs (VPP) [47 FR 29025], adopted by OSHA, established the efficacy of cooperative action among government, industry, and labor to address employee safety and health issues and to expand employee protection. To qualify, employers must meet OSHA's safety and health management criteria which focus on comprehensive management programs and active employee involvement to prevent or control worksite safety and health hazards. Employers who qualify generally view OSHA standards as a minimum level of safety and health performance, and set their own more stringent standards, wherever necessary, to improve employee protection. Prospective VPP worksites must submit an application that includes:

General applicant information (e.g., site, corporate, and collective bargaining contact information).

Injury and illness rate performance information (i.e., number of employees and/or applicable contractors on site, type of work performed and products produced, North American Industry Classification System (NAICS) codes, and Recordable Injury and Illness Case Incidence Rate information).

Safety and health management program information (i.e., description of the applicant's safety and health management programs including how the programs successfully address management leadership and employee involvement, worksite analysis, hazard prevention and control, and safety and health training).

OSHA uses this information to determine whether an applicant is ready for a VPP on-site evaluation and as a verification tool during VPP on-site evaluations. Without this information, OSHA would be unable to determine which sites are ready for VPP status.

Each current VPP applicant is also required to submit an annual self-evaluation which addresses how that applicant is continuing its adherence to programmatic requirements.

In 2008, OSHA modified procedures for VPP applicants, OSHA on-site evaluations, and annual participant self-evaluations for applicants/participants subject to OSHA's Process Safety Management (PSM) Standard. Applicants that perform work that use or produce highly hazardous chemicals exceeding specified limits covered under the PSM standard must submit responses to the PSM application supplement along with their VPP application.

Once in the VPP, the participant is required to submit an annual self-evaluation detailing its continued adherence to programmatic requirements. Applicants covered under the PSM standard are required to submit a PSM questionnaire, a supplemental document, as part of their annual submission. OSHA needs this information to ensure that the participant remains qualified to participate in the VPP between on-site evaluations. Without this information, OSHA would be unable to determine whether applicants are maintaining excellent safety and health management programs during this interim period.

In 2009, with the publication of the **Federal Register** Notice (FRN) (74 FR 927, January 9, 2009), VPP revised its traditional focus on individual fixed worksites (site-based) by adding two new ways to participate: Mobile workforce and corporate. A significant reorganization of the program helped clarify the multiple participation options now available.

Employees of VPP participants may apply to participate in the Special Government Employee (SGE) Program. The SGE Program offers private and public sector safety and health professionals and other qualified participants the opportunity to exchange ideas, gain new perspectives, and grow professionally while serving as full-fledged team members on OSHA's VPP on-site evaluations. In that capacity, SGEs may review company documents, assist with worksite walkthroughs, interview employees, and assist in preparing VPP on-site evaluation reports. Potential SGEs must submit an application that includes:

- SGE Eligibility Information Sheet (i.e., applicant's name, professional; credentials, site/corporate contact information, etc.);
- Current Resume;
- Confidential Financial Disclosure Report (OGE Form 450).

OSHA uses the SGE Eligibility Information Sheet to ensure that the potential SGE works at a VPP site and meets the minimum eligibility qualifications. The resume is required to provide a detailed description of their current duties and responsibilities as they relate to safety and health and the implementation of an effective safety and health management program. The OGE Form 450 is used to ensure that SGEs do not participate on on-site evaluations at VPP sites in which they have a financial interest.

OSHA Challenge is designed to reach and guide employers and companies in all major industry groups who are strongly committed to improving their safety and health management programs and possibly pursuing recognition in the VPP. The Challenge Administrator's application is used to: (1) Conduct a preliminary analysis of the applicant's knowledge of safety and health management programs; and (2) make a determination regarding the applicant's qualifications to become a Challenge Administrator. Once a Challenge Administrator is approved, the program's Administrator will review each Challenge candidate's application/annual submissions to ensure that all necessary information is provided, prior to forwarding them to OSHA's National Office for analysis and acceptance.

II. Special Issues for Comment

OSHA has a particular interest in comments on the following issues:

- Whether the information collection requirements are necessary for the proper performance of the Agency's functions, including whether the information is useful;
- The accuracy of the Agency's estimate of the burden (time and costs) of the information collection requirements, including the validity of the methodology and assumptions used;
- The quality, utility, and clarity of the information collected; and
- Ways to minimize the burden on employers who must comply; for example, by using automated or other technological information collection and transmission techniques.

III. Proposed Actions

OSHA proposes to extend OMB's approval of the collection of information (paperwork) requirements necessitated by the Voluntary Protection Programs. The Agency is requesting an adjustment in the burden hours from 115,360 to 112,210, a total decrease of 3,150 hours. The Agency will summarize the

comments submitted in response to this notice, and will include this summary in its request to OMB to extend the approval of these information collection requirements.

Type of Review: Extension of a currently approved collection.

Title: Voluntary Protection Programs Information.

OMB Control Number: 1218–0239.

Affected Public: Business or other for-profits; individuals or households; Federal government; state, local or tribal government.

Number of Respondents:

VPP
- 300 Applications
- 75 Process Safety Management Applications
- 1,700 Annual Self-Evaluations
- 425 (PSM) Annual Self-Evaluations/ Supplemental Questionnaire

Challenge
- 14 Challenge Administrator's Applications
- 210 Challenge Participant's Applications
- 210 Challenge Annual Self-Evaluations

Special Government Employees
- 900 SGE Eligibility Information Sheets
- 900 Resumes
- 300 Confidential Financial Disclosure Forms (OGE-Form 450)

Number of Respondents: 5,034.

Frequency of Responses: VPP applications and Challenge Administrator's and Participant applications are submitted once; VPP and Challenge Annual Self-Evaluations are submitted annually, and SGE applications are submitted once every three years.

Total Responses: 5,034.

Average Time per Response:

VPP General
- 200 hours for VPP Applications
- 20 hours for VPP Annual Evaluations

Process Safety Management
- 40 hours for Applications
- 20 hours for Annual Evaluations

Challenge
- 5 hours for Challenge Administrator's Applications
- 10 hours for Challenge Candidate Applications
- 20 hours for Challenge Annual Evaluations

Special Government Employees (SGE)
- 10 minutes (.13 hour) for SGE Eligibility Information Sheet
- 30 minutes (.50 hour) for SGE Resume
- 30 minutes (.50 hour) for Confidential Financial Disclosure Form

Estimated Total Burden Hours: 112,210.

Estimated Cost (Operation and Maintenance): $0.

IV. Public Participation—Submission of Comments on This Notice and Internet Access to Comments and Submissions

You may submit comments in response to this document as follows: (1) Electronically at *http://www.regulations.gov,* which is the Federal eRulemaking Portal; (2) by facsimile (fax); or (3) by hard copy. All comments, attachments, and other material must identify the Agency name and the OSHA docket number (Docket No. OSHA–2011–0056) for the ICR. You may supplement electronic submissions by uploading document files electronically. If you wish to mail additional materials in reference to an electronic or facsimile submission, you must submit them to the OSHA Docket Office (see the section of this notice titled **ADDRESSES**). The additional materials must clearly identify your electronic comments by your name, date, and the docket number so the Agency can attach them to your comments.

Because of security procedures, the use of regular mail may cause a significant delay in the receipt of comments. For information about security procedures concerning the delivery of materials by hand, express delivery, messenger, or courier service, please contact the OSHA Docket Office at (202) 693–2350, (TTY (877) 889–5627).

Comments and submissions are posted without change at *http://www.regulations.gov.* Therefore, OSHA cautions commenters about submitting personal information such as social security numbers and date of birth. Although all submissions are listed in the *http://www.regulations.gov* index, some information (e.g., copyrighted material) is not publicly available to read or download from this Web site. All submissions, including copyrighted material, are available for inspection and copying at the OSHA Docket Office. Information on using the *http://www.regulations.gov* Web site to submit comments and access the docket is available at the Web site's ''User Tips'' link. Contact the OSHA Docket Office for information about materials not available from the Web site, and for assistance in using the Internet to locate docket submissions.

V. Authority and Signature

David Michaels, Ph.D., MPH, Assistant Secretary of Labor for Occupational Safety and Health, directed the preparation of this notice. The authority for this notice is the Paperwork Reduction Act of 1995 (44 U.S.C. 3506 et seq.) and Secretary of Labor's Order No. 4–2012 (75 FR 3912).

Signed at Washington, DC, on June 25, 2014.

David Michaels,

Assistant Secretary of Labor for Occupational Safety and Health.

[FR Doc. 2014–15235 Filed 6–27–14; 8:45 am]

BILLING CODE 4510–26–P

NATIONAL AERONAUTICS AND SPACE ADMINISTRATION

Notice of Information Collection

AGENCY: National Aeronautics and Space Administration (NASA).

Notice: (14–050).

ACTION: Notice of information collection.

SUMMARY: The National Aeronautics and Space Administration, as part of its continuing effort to reduce paperwork and respondent burden, invites the general public to take this opportunity to comment on the ''Generic Clearance for the Collection of Qualitative Feedback on Agency Service Delivery'' for approval under the Paperwork Reduction Act (PRA) (44 U.S.C. 3501 et. seq.). This collection was developed as part of a Federal Government-wide effort to streamline the process for seeking feedback from the public on service delivery. This notice announces our intent to submit this collection to OMB for approval and solicits comments on specific aspects for the proposed information collection,

DATES: Consideration will be given to all comments received within 30 days after from the date of this publication.

ADDRESSES: Interested persons are invited to submit written comments on the proposed information collection to the Office of Information and Regulatory Affairs, Office of Management and Budget, 725 17th Street NW., Washington, DC 20503, Attention: Desk Officer for NASA.

FOR FURTHER INFORMATION CONTACT: Requests for additional information or copies of the information collection instrument(s) and instructions should be directed to Frances Teel, NASA PRA Clearance Officer, NASA Headquarters, 300 E Street SW., Mail Code JF0000, Washington, DC 20546 or *frances.c.teel@nasa.gov.*

Title: Extension of the Generic Clearance for the Collection of Qualitative Feedback on Agency Service Delivery.

OMB Control number: 2700–0153.

Abstract: The proposed information collection activity provides a means to garner qualitative customer and

stakeholder feedback in an efficient, timely manner, in accordance with the Administration's commitment to improving service delivery. By qualitative feedback we mean information that provides useful insights on perceptions and opinions, but are not statistical surveys that yield quantitative results that can be generalized to the population of study. This feedback will provide insights into customer or stakeholder perceptions, experiences and expectations, provide an early warning of issues with service, or focus attention on areas where communication, training or changes in operations might improve delivery of products or services. These collections will allow for ongoing, collaborative and actionable communications between the Agency and its customers and stakeholders. It will also allow feedback to contribute directly to the improvement of program management.

The solicitation of feedback will target areas such as: Timeliness, appropriateness, accuracy of information, courtesy, efficiency of service delivery, and resolution of issues with service delivery. Responses will be assessed to plan and inform efforts to improve or maintain the quality of service offered to the public. If this information is not collected, vital feedback from customers and stakeholders on the Agency's services will be unavailable.

The Agency will only submit a collection for approval under this generic clearance if it meets the following conditions:

- The collections are voluntary;
- The collections are low-burden for respondents (based on considerations of total burden hours, total number of respondents, or burden-hours per respondent) and are low-cost for both the respondents and the Federal Government;
- The collections are non-controversial and do not raise issues of concern to other Federal agencies;
- Any collection is targeted to the solicitation of opinions from respondents who have experience with the program or may have experience with the program in the near future;
- Personally identifiable information (PII) is collected only to the extent necessary and is not retained;
- Information gathered will be used only internally for general service improvement and program management purposes and is not intended for release outside of the agency;
- Information gathered will not be used for the purpose of substantially informing influential policy decisions; and
- Information gathered will yield qualitative information; the collections will not be designed or expected to yield statistically reliable results or used as though the results are generalizable to the population of study.

Feedback collected under this generic clearance provides useful information, but it does not yield data that can be generalized to the overall population. This type of generic clearance for qualitative information will not be used for quantitative information collections that are designed to yield reliably actionable results, such as monitoring trends over time or documenting program performance. Such data uses require more rigorous designs that address: The target population to which generalizations will be made, the sampling frame, the sample design (including stratification and clustering), the precision requirements or power calculations that justify the proposed sample size, the expected response rate, methods for assessing potential non-response bias, the protocols for data collection, and any testing procedures that were or will be undertaken prior to fielding the study. Depending on the degree of influence the results are likely to have, such collections may still be eligible for submission for other generic mechanisms that are designed to yield quantitative results.

As a general matter, information collections will not result in any new system of records containing privacy information and will not ask questions of a sensitive nature, such as sexual behavior and attitudes, religious beliefs, and other matters that are commonly considered private.

Current Actions: Extension of approval for a collection of information.

Type of Review: Extension.

Affected Public: Individuals and Households, Businesses and Organizations, State, Local, or Tribal Government.

Below we provide projected average estimates for the next three years:

Average Expected Annual Number of activities: 60.

Average number of Respondents per Activity: 300.

Annual responses: 18,000.

Frequency of Response: Once per request.

Average minutes per response: 5.

Burden hours: 1,500.

Request for Comments: Comments submitted in response to this notice will be summarized and/or included in the request for OMB approval. Comments are invited on: (a) Whether the collection of information is necessary for the proper performance of the functions of the agency, including whether the information shall have practical utility; (b) the accuracy of the agency's estimate of the burden of the collection of information; (c) ways to enhance the quality, utility, and clarity of the information to be collected; (d) ways to minimize the burden of the collection of information on respondents, including through the use of automated collection techniques or other forms of information technology; and (e) estimates of capital or start-up costs and costs of operation, maintenance, and purchase of services to provide information. Burden means the total time, effort, or financial resources expended by persons to generate, maintain, retain, disclose or provide information to or for a Federal agency. This includes the time needed to review instructions; to develop, acquire, install and utilize technology and systems for the purpose of collecting, validating and verifying information, processing and maintaining information, and disclosing and providing information; to train personnel and to be able to respond to a collection of information, to search data sources, to complete and review the collection of information; and to transmit or otherwise disclose the information.

All written comments will be available for public inspection at: Regulations.gov.

An agency may not conduct or sponsor, and a person is not required to respond to, a collection of information unless it displays a currently valid Office of Management and Budget control number.

Frances Teel,

NASA PRA Clearance Officer.

[FR Doc. 2014–15229 Filed 6–27–14; 8:45 am]

BILLING CODE 7510–13–P

NUCLEAR REGULATORY COMMISSION

[Docket No. 50–341; NRC–2014–0109]

DTE Electric Company; Fermi 2

AGENCY: Nuclear Regulatory Commission.

ACTION: Intent to prepare an environmental impact statement and conduct the scoping process; public meetings and opportunity to comment.

SUMMARY: DTE Electric Company (DTE) has submitted an application for renewal of Facility Operating License NPF–43 for an additional 20 years of operation at Fermi 2. The current operating license for Fermi 2 expires at midnight on March 20, 2025. Fermi 2 is

located in Frenchtown Township, Monroe County, Michigan. The purpose of this notice is to inform the public that the U.S. Nuclear Regulatory Commission (NRC) will be preparing an environmental impact statement (EIS) related to the review of the license renewal application and to provide the public an opportunity to participate in the environmental scoping process.

DATES: Submit comments by August 29, 2014. Comments received after this date will be considered if it is practical to do so, but the Commission is able to ensure consideration only for comments received before this date.

ADDRESSES: You may submit comments by any of the following methods (unless this document describes a different method for submitting comments on a specific subject):

- *Federal Rulemaking Web site:* Go to *http://www.regulations.gov* and search for Docket ID NRC–2014–0109. Address questions about NRC dockets to Carol Gallagher; telephone: 301–287–3422; email: *Carol.Gallagher@nrc.gov.* For technical questions, contact the individual listed in the **FOR FURTHER INFORMATION CONTACT** section of this document.
- *Mail comments to:* Cindy Bladey, Office of Administration, Mail Stop: 3WFN–06–A44M, U.S. Nuclear Regulatory Commission, Washington, DC 20555–0001.

For additional direction on obtaining information and submitting comments, see ''Obtaining Information and Submitting Comments'' in the **SUPPLEMENTARY INFORMATION** section of this document.

FOR FURTHER INFORMATION CONTACT: Leslie Perkins, Environmental Project Manager, Office of Nuclear Reactor Regulation, U.S. Nuclear Regulatory Commission, Washington, DC 20555–0001; telephone: 301–415–2375, email: *Leslie.Perkins@nrc.gov.*

SUPPLEMENTARY INFORMATION:

I. Obtaining Information and Submitting Comments

A. Obtaining Information

Please refer to Docket ID NRC–2014–0109 when contacting the NRC about the availability of information regarding this document. You may access information related to this document by any of the following methods:

- *Federal Rulemaking Web site:* Go to *http://www.regulations.gov* and search for Docket ID NRC–2014–0109.
- *NRC's Agencywide Documents Access and Management System (ADAMS):* You may obtain publicly-available documents online in the ADAMS Public Documents collection at *http://www.nrc.gov/reading-rm/adams.html.* To begin the search, select ''*ADAMS Public Documents*'' and then select ''*Begin Web-based ADAMS Search.*'' For problems with ADAMS, please contact the NRC's Public Document Room (PDR) reference staff at 1–800–397–4209, 301–415–4737, or by email to *pdr.resource@nrc.gov.* The ADAMS accession number for each document referenced in this document (if that document is available in ADAMS) is provided the first time that a document is referenced. DTE's application for renewal can be found in ADAMS under ADAMS Accession Nos. ML14121A554 and ML14156A237.
- *NRC's PDR:* You may examine and purchase copies of public documents at the NRC's PDR, Room O1–F21, One White Flint North, 11555 Rockville Pike, Rockville, Maryland 20852.

B. Submitting Comments

Please include Docket ID NRC–2014–0109 in the subject line of your comment submission, in order to ensure that the NRC is able to make your comment submission available to the public in this docket.

The NRC cautions you not to include identifying or contact information that you do not want to be publicly disclosed in your comment submission. The NRC will post all comment submissions at *http://www.regulations.gov* as well as enter the comment submissions into ADAMS. The NRC does not routinely edit comment submissions to remove identifying or contact information.

If you are requesting or aggregating comments from other persons for submission to the NRC, then you should inform those persons not to include identifying or contact information that they do not want to be publicly disclosed in their comment submission. Your request should state that the NRC does not routinely edit comment submissions to remove such information before making the comment submissions available to the public or entering the comment submissions into ADAMS.

II. Discussion

The application for license renewal, dated April 24, 2014, was submitted pursuant to Part 54 of Title 10 of the *Code of Federal Regulations* (10 CFR), which included an environmental report (ER). A separate notice of receipt and availability of the application was published in the **Federal Register** on May 12, 2014 (79 FR 27003). A notice of acceptance for docketing of the application and opportunity for hearing regarding renewal of the facility operating license was published on June 18, 2014, in the **Federal Register** (79 FR 34787). The purpose of this notice is to inform the public that the NRC will be preparing an EIS related to the review of the license renewal application and to provide the public an opportunity to participate in the environmental scoping process, as defined in 10 CFR 51.29.

As outlined in 36 CFR 800.8, ''Coordination With the National Environmental Policy Act,'' the NRC plans to coordinate compliance with Section 106 of the National Historic Preservation Act (NHPA) in meeting the requirements of the National Environmental Policy Act of 1969 (NEPA). Pursuant to 36 CFR 800.8(c), the NRC intends to use its process and documentation for the preparation of the EIS on the proposed action to comply with Section 106 of the NHPA in lieu of the procedures set forth at 36 CFR 800.3 through 800.6.

In accordance with 10 CFR 51.53(c) and 10 CFR 54.23, DTE submitted the ER as part of the application. The ER was prepared pursuant to 10 CFR Part 51 and is publicly available in ADAMS under Accession Nos. ML14121A538, ML14121A539, and ML14121A540. The ER may also be viewed on the Internet at *http://www.nrc.gov/reactors/operating/licensing/renewal/applications/fermi.html.* In addition, paper copies of the ER are available for public review near the site at the Ellis Library and Reference Center, 3700 South Cluster Road, Monroe, Michigan 48161.

This document advises the public that the NRC intends to gather the information necessary to prepare a plant specific supplement to the NRC's ''Generic Environmental Impact Statement (GEIS) for License Renewal of Nuclear Plants''(NUREG–1437, Revision 1), related to the review of the application for renewal of the Fermi 2 operating license for an additional 20 years.

Possible alternatives to the proposed action (license renewal) include no action and reasonable alternative energy sources. The NRC is required by 10 CFR 51.95 to prepare a supplement to the GEIS in connection with the renewal of an operating license. This notice is being published in accordance with NEPA and the NRC's regulations found at 10 CFR Part 51.

The NRC will first conduct a scoping process for the supplement to the GEIS and, as soon as practicable thereafter, will prepare a draft supplement to the GEIS for public comment. Participation in the scoping process by members of

the public and local, State, tribal, and Federal government agencies is encouraged. The scoping process for the supplement to the GEIS will be used to accomplish the following:

a. Define the proposed action, which is to be the subject of the supplement to the GEIS;

b. Determine the scope of the supplement to the GEIS and identify the significant issues to be analyzed in depth;

c. Identify and eliminate from detailed study those issues that are peripheral or that are not significant;

d. Identify any environmental assessments and other ElSs that are being or will be prepared that are related to, but are not part of, the scope of the supplement to the GEIS being considered;

e. Identify other environmental review and consultation requirements related to the proposed action;

f. Indicate the relationship between the timing of the preparation of the environmental analyses and the Commission's tentative planning and decision-making schedule;

g. Identify any cooperating agencies and, as appropriate, allocate assignments for preparation and schedules for completing the supplement to the GEIS to the NRC and any cooperating agencies; and

h. Describe how the supplement to the GEIS will be prepared and include any contractor assistance to be used.

The NRC invites the following entities to participate in scoping:

a. The applicant, DTE;

b. Any Federal agency which has jurisdiction by law or special expertise with respect to any environmental impact involved or which is authorized to develop and enforce relevant environmental standards;

c. Affected State and local agencies, including those authorized to develop and enforce relevant environmental standards;

d. Any affected Indian tribe;

e. Any person who has requested an opportunity to participate in the scoping process; and

f. Any person who has petitioned or intends to petition for leave to intervene in the proceeding or who has been admitted as a party to the proceeding.

III. Public Scoping Meeting

In accordance with 10 CFR 51.26, the scoping process for an EIS may include a public scoping meeting to help identify significant issues related to a proposed activity and to determine the scope of issues to be addressed in an EIS. The NRC has decided to hold public meetings for the Fermi 2 license renewal supplement to the GEIS. The scoping meetings will be held on July 24, 2014, and there will be two sessions to accommodate interested persons. The first session will convene at 2:00 p.m. and will continue until 4:00 p.m., as necessary. The second session will convene at 7:00 p.m., with a repeat of the overview portions of the meeting, and will continue until 9:00 p.m., as necessary. Both sessions will be held at the Monroe County Community College, La-Z-Boy Center, Meyer Theater, 1555 South Raisinville Road, Monroe, Michigan 48161.

Both meetings will be transcribed and will include: (1) An overview by the NRC staff of the NEPA environmental review process, the proposed scope of the supplement to the GEIS, and the proposed review schedule; and (2) the opportunity for interested government agencies, organizations, and individuals to submit comments or suggestions on the environmental issues or the proposed scope of the supplement to the GEIS. Additionally, the NRC staff will host informal discussions one hour prior to the start of each session at the same location. No formal comments on the proposed scope of the supplement to the GEIS will be accepted during the informal discussions. To be considered, comments must be provided either at the transcribed public meetings or in writing, as discussed above.

Persons may register to attend or present oral comments at the meetings on the scope of the NEPA review by contacting the NRC Project Manager, Ms. Leslie Perkins, by telephone at 1–800–368–5642, extension 2375, or by email at *Leslie.Perkins@nrc.gov*, no later than July 8, 2014. Members of the public may also register to speak at the meeting within 15 minutes of the start of each session. Individual oral comments may be limited by the time available, depending on the number of persons who register. Members of the public who have not registered may also have an opportunity to speak if time permits. Public comments will be considered in the scoping process for the supplement to the GEIS. Ms. Perkins will need to be contacted no later than July 14, 2014, if special equipment or accommodations are needed to attend or present information at the public meeting so that the NRC staff can determine whether the request can be accommodated.

Participation in the scoping process for the supplement to the GEIS does not entitle participants to become parties to the proceeding to which the supplement to the GEIS relates. Matters related to participation in any hearing are outside the scope of matters to be discussed at this public meeting.

At the conclusion of the scoping process, the NRC will prepare a concise summary of the determination and conclusions reached, including the significant issues identified, and will send a copy of the summary to each participant in the scoping process. The summary will also be available for inspection in ADAMS. The NRC staff will then prepare and issue for comment the draft supplement to the GEIS, which will be the subject of a separate notice and separate public meetings. Copies will be available for public inspection at the above-mentioned addresses.

After receipt and consideration of the comments, the NRC will prepare a final supplement to the GEIS, which will also be available for public inspection.

Dated at Rockville, Maryland, this 20th day of June 2014.

For the Nuclear Regulatory Commission.

Brian Wittick, Chief,

Projects Branch 2, Division of License Renewal, Office of Nuclear Reactor Regulation.

[FR Doc. 2014–15281 Filed 6–27–14; 8:45 am]

BILLING CODE 7590–01–P

SECURITIES AND EXCHANGE COMMISSION

Sunshine Act Meetings

STATUS: Closed Meeting.

PLACE: 100 F Street NE., Washington, DC.

DATE AND TIME OF PREVIOUSLY ANNOUNCED MEETING: June 26, 2014 at 2 p.m.

CHANGE IN THE MEETING: Additional Item.

FEDERAL REGISTER CITATION OF PREVIOUS ANNOUNCEMENT: [79 FR 35823, June 24, 2014].

The following matter will also be considered during the 2 p.m. Closed Meeting scheduled for Thursday, June 26, 2014:

A civil litigation matter

The General Counsel of the Commission, or her designee, has certified that, in her opinion, one or more of the exemptions as set forth in 5 U.S.C. 552b(c)(3), (5), (7), (9)(B) and (10) and 17 CFR 200.402(a)(3), (5), (7), (9)(ii) and (10), permit consideration of the scheduled matter at the Closed Meeting.

Commissioner Aguilar, as duty officer, voted to consider the item listed for the Closed Meeting in closed session, and determined that no earlier notice thereof was possible.

At times, changes in Commission priorities require alterations in the

scheduling of meeting items. For further information and to ascertain what, if any, matters have been added, deleted or postponed, please contact the Office of the Secretary at (202) 551–5400.

Dated: June 26, 2014.

Kevin M. O'Neill,

Deputy Secretary.

[FR Doc. 2014–15394 Filed 6–26–14; 4:15 pm]

BILLING CODE 8011–01–P

SECURITIES AND EXCHANGE COMMISSION

[Release No. 34–72460]

Order Directing the Exchanges and the Financial Industry Regulatory Authority To Submit a Tick Size Pilot Plan

June 24, 2014.

Notice is hereby given that, pursuant to Section 11A(a)(3)(B) of Securities Exchange Act of 1934 (''Act''),[1] the Securities and Exchange Commission (''Commission'') orders the BATS Exchange, Inc., BATS Y-Exchange, Inc., Chicago Stock Exchange, Inc., EDGA Exchange, Inc., EDGX Exchange, Inc., The Nasdaq Stock Market LLC, Nasdaq OMX BX, Nasdaq OMX Phlx, National Stock Exchange, Inc., New York Stock Exchange LLC, NYSE Arca, Inc., NYSE MKT LLC, and Financial Industry Regulatory Authority, Inc. (''FINRA'') (collectively the ''Participants'' and individually a ''Participant'') to act jointly in developing and filing with the Commission a national market system plan to implement a pilot program that, among other things, would widen the quoting and trading increments for certain small capitalization stocks as described in detail below (''Tick Size Pilot Plan''). The Tick Size Pilot Plan should be filed with the Commission pursuant to Rule 608 under the Act[2] no later than August 25, 2014.

I. Background

Prior to implementing decimal pricing in April 2001, the U.S. equity markets used fractions as minimum pricing increments. In the 1990s, the Commission began to re-examine the fractional pricing structure, and in 1994, the Commission staff issued a report (the ''Market 2000 Report'') on the equities markets that, among other things, expressed concern that the then-existing 1/8th of a dollar minimum pricing increment was ''caus[ing] artificially wide spreads and hinder[ing] quote competition,'' leading to excessive profits for market makers.[3] In the Market 2000 Report, the Commission staff also expressed concern that fractional pricing put the U.S. equity markets at a competitive disadvantage to foreign equity markets that used decimal pricing increments. The Commission used these findings as part of a public discussion on whether the U.S. equity markets should adopt a lower fractional minimum tick size or adopt decimal pricing.

At the same time, the exchanges and NASDAQ (the predecessor to The Nasdaq Stock Market LLC) began to implement lower tick sizes, generally to 1/16th of $1.00.[4] The Commission, the exchanges and NASDAQ believed that the reductions in tick size would provide multiple benefits to the equity markets, including better pricing and greater liquidity.

In January 2000, the Commission ordered the exchanges and NASD (the predecessor to FINRA) to submit a decimalization plan that would implement decimal pricing in certain securities by July 2000.[5] Throughout 2000, the Commission and the self-regulatory organizations (''SROs'') worked to phase-out fractional pricing and phase-in decimal pricing.[6] The conversion to decimal pricing was completed in April 2001.[7] These actions reduced the allowable tick size to a penny but did not mandate a minimum tick size.

In 2004, the Commission proposed, and then re-proposed, Rule 612 of Regulation NMS to establish a minimum price variation (''MPV'') of one penny.[8] Several commenters on the original proposal had recommended an MPV of greater than one penny. In response, the Commission noted that proposed Rule 612 would ''set a floor for the MPV, not determine an optimal MPV.''[9] The Commission further stated that the conversion to decimal pricing had ''reduced spreads, thus resulting in reduced trading costs for investors entering orders—particularly for smaller orders—that are executed at or within the quotations,''[10] and because of these benefits the Commission did not propose a higher MPV. It added, however, that ''if the SROs in the future believe that an increase in the MPV is necessary or desirable, they may propose rule changes to institute the higher MPV''[11] and that the Commission would evaluate them at that time. In 2005, the Commission adopted Regulation NMS Rule 612, and since that time the one penny MPV has applied to all listed stocks priced at $1.00 or more per share.[12]

Since the adoption of Regulation NMS, the Commission has continued to evaluate tick sizes in the equity

[1] Section 11A(a)(3)(B) authorizes the Commission, in furtherance of its statutory directive to facilitate the establishment of a national market system, by rule or order, ''to authorize or require self-regulatory organizations to act jointly with respect to matters as to which they share authority under [the Act] in planning, developing, operating, or regulating a national market system (or a subsystem thereof) or one or more facilities thereof.'' 15 U.S.C. 78k–1(a)(3)(B).

[2] 17 CFR 242.608.

[3] *See* Securities and Exchange Commission, Market 2000: An Examination of Current Equity Market Developments (1994).

[4] *See* Securities Exchange Act Release Nos. 31118 (August 28, 1992), 57 FR 40484 (September 3, 1992) (SR–Amex–91–07) (Order approving proposed rule change relating to amendments to rule 127-minimum fractional changes); 38571 (May 5, 1997), 62 FR 25682 (May 9, 1997) (SR–Amex–97–14) (Order granting approval to proposed rule change relating to trading in 1/16th of $1.00); 38897 (August 1, 1997), 62 FR 42847 (August 8, 1997) (SR–NYSE–97–21) (Order granting approval to proposed rule change relating to trading differentials for equity securities); 38678 (May 27, 1997) 62 FR 30363 (June 3, 1997) (SR–NASD–97–27) (Order granting approval to proposed rule change to decrease the minimum quotation increment for certain securities listed and traded on The NASDAQ Stock Market to 1/16th of $1.00). These tick sizes were not binding on other markets. Some electronic communication networks (ECNs) allowed prices in increments of 1/256th of $1.00. *See also* Securities Exchange Act Release No. 44568, 66 FR 38390, 38392 (July 24, 2001) (Request for Comment on the Effects of Decimal Trading in Subpennies).

[5] *See* Securities Exchange Act Release No. 42360 (January 28, 2000), 65 FR 5003 (February 2, 2000) (''January Order'').

[6] In April 2000, the Commission issued an order staying the deadlines set forth in the January Order and issued a notice requesting comment on two alternatives for implementing decimalization. *See* Securities Exchange Act Release No. 42685 (April 13, 2000), 65 FR 21046 (April 19, 2000). In June, the Commission issued another order that directed the exchanges and NASD to submit a plan to phase-in decimal pricing starting in in September 2000, which was to be completed by April 2001. *See* Securities Exchange Act Release No. 42914 (June 8, 2000), 65 FR 38010 (June 19, 2000).

[7] The exchanges and NASD submitted a plan, started the phase-in on time and finished implementing decimalization by April 2001. *See* Commission Notice: Decimals Implementation Plan for the Equities and Options Markets (July 24, 2000), *available at http://www.sec.gov/rules/other/decimalp.htm.*

[8] *See* Securities Exchange Act Release No. 50870 (December 16, 2004), 69 FR 77424 (December 27, 2004) (Regulation NMS proposing release).

[9] *Id.* at 77458.

[10] *Id.*

[11] *Id.*

[12] Rule 612 specifies minimum pricing increments for NMS stocks. In general, Rule 612 prohibits market participants from displaying, ranking, or accepting quotations, orders, or indications of interest in any NMS stock priced in an increment smaller than $0.01 if the quotation, order, or indication of interest is priced equal to or greater than $1.00 per share. If the quotation, order, or indication of interest is priced less than $1.00 per share, the minimum pricing increment is $0.0001. 17 CFR 242.612. An NMS stock means any security or class of securities, other than an option, for which transaction reports are collected, processed, and made available pursuant to an effective transaction reporting plan. *See* 17 CFR 242.600(b)(46) and (47).

markets.[13] In January 2010, the Commission issued a Concept Release, which requested comments on issues, including high frequency trading, order routing, market data linkages, and undisplayed liquidity.[14] In the discussion on undisplayed liquidity, the Commission requested comments on whether public price discovery and execution quality have suffered, and specifically questioned whether the minimum pricing increment for lower priced stocks should be reduced, noting that broker-dealers may have greater incentives to internalize low-priced stocks than higher priced stocks, given the relatively larger minimum spreads that could be earned by broker-dealers. In response, the Commission received several letters opposing [15] and supporting [16] a pilot program to test sub-penny tick increments. The Commission also received letters recommending a pilot program to test a wider variety of tick sizes.[17]

From time to time since the introduction of decimal pricing, concerns have been raised that the one penny MPV may be detrimental to small- and middle-sized companies. In particular, a few studies have raised questions regarding whether decimalization has reduced incentives for underwriters to pursue public offerings of smaller companies, limited the production of sell-side research for small and middle capitalization companies, and made it less attractive to become a market maker in the shares of smaller companies.[18]

In 2012, Congress passed the Jumpstart Our Business Startups Act (''JOBS Act''), which contained provisions relating to the impact of decimalization on small and middle capitalization companies. Specifically, Section 106(b) of the JOBS Act directed the Commission to conduct a study and report to Congress on how decimalization affected the number of initial public offerings (''IPOs''), and the liquidity and trading of smaller capitalization company securities. The Commission submitted the staff study to Congress in the July 2012 Decimalization Report.[19]

The Decimalization Report summarized the academic literature relating to the impact of decimalization on the market generally, and on the securities of small and middle capitalization companies. The Commission staff noted that there were no academic papers that directly examined the relationship between decimalization and the number of IPOs. The academic studies summarized in the Decimalization Report analyzed decimalization's impact on spreads, depth, execution speed, trade size, specialist/market maker participation and profitability, market and limit orders, order routing, volatility, and incentives for broker promotion. The Decimalization Report identified the main empirical findings of the academic literature in each of these areas. For example, some studies found that while both effective and quoted spreads declined after decimalization, there is some evidence that, at least for NASDAQ small capitalization stocks, the decline is not statistically significant, and the effect of decimalization on institutional transaction costs is mixed. In addition, some studies found that while quoted depth, on average, declined after decimalization, cumulative depth at competitive prices did not change. Some studies found that market maker participation increased after decimalization across all market capitalization categories, but decimalization does not appear to have reduced profitability.

In the Decimalization Report, the Commission staff also surveyed tick-size conventions in non-U.S. markets. Many foreign jurisdictions utilize a tiered tick size approach that provides greater variability for tick sizes based on the price level of a stock rather than the ''one size fits all'' approach utilized in the United States. Many countries have tick sizes that are four or more times wider than in the U.S. on a percentage basis. However, a few other countries have tick sizes that are less than half the size of the U.S. on a percentage basis. Therefore, the Decimalization Report stated that the U.S. market would benefit from a broad review of tick sizes, and such review would be informed by the experiences in other countries.[20]

Finally, the Decimalization Report considered the panel discussion that occurred during the meeting of the SEC Advisory Committee on Small and Emerging Companies (''Small Company Advisory Committee'') [21] in June 2012 that related to market structure issues and their impact on small and middle capitalization companies and on IPOs. In particular, some Small Company Advisory Committee members commented that it may be hard to

[13] In addition, the Commission has evaluated tick sizes in the options market and has approved a penny pilot program in the options markets. *See e.g.,* Securities and Exchange Act Release Nos. 55153 (January 23, 2007), 72 FR 4553 (January 31, 2007) (SR–Phlx–2006–74); 55154 (January 23, 2007), 72 FR 4743 (February 1, 2007) (SR–CBOE–2006–92); 55155 (January 23, 2007), 72 FR 4741 (February 1, 2007) (SR–BSE–2006–49); 55156 (January 23, 2007), 72 FR 4759 (February 1, 2007) (SR–NYSEArca–2006–73); 55161 (January 24, 2007), 72 FR 4754 (February 1, 2007) (SR–ISE–2006–62); and 55162 (January 24, 2007), 72 FR 4738 (February 1, 2007) (SR–Amex–2006–106).

[14] *See* Securities Exchange Act Release No. 61358 (January 14, 2010), 75 FR 3594 (January 21, 2010) (''Concept Release'').

[15] *See, e.g.,* Letters from Karrie McMillan, General Counsel, Investment Company Institute, dated April 21, 2010; Ann Vlcek, Managing Director and Associate General Counsel, Securities Industry and Financial Markets Association, dated April 29, 2010; James J. Angel, Associate Professor, McDonough School of Business, Georgetown University; Lawrence E. Harris, Fred V. Keenan Chair in Finance, Professor of Finance and Business Economics, Marshall School of Business, University of Southern California; Chester S. Spatt, Pamela R. and Kenneth B. Dunn Professor of Finance, Director, Center for Financial Markets, Tepper School of Business, Carnegie Mellon University, dated February 23, 2010.

[16] *See, e.g.,* Letters from Eric Swanson, General Counsel, BATS Exchange, Inc., dated April 21, 2010 and Eric W. Hess, General Counsel, Direct Edge, dated April 28, 2010.

[17] *See, e.g.,* Letters from Janet M. Kissane, SVP—Legal and Corporate Secretary, Office of the General Counsel, NYSE Euronext, dated April 23, 2010; and John A. McCarthy, General Counsel, GETCO LLC, Christopher R. Concannon, Partner, Virtu Financial LLC, and Leonard J. Amoruso, General Counsel, Knight Capital Group, Inc., dated July 9, 2010. In addition, in April 2010, BATS Exchange, Inc., NASDAQ OMX Group, Inc., and NYSE Euronext, Inc. petitioned the Commission to exercise its exemptive authority under Rule 612(c) of Regulation NMS to implement a pilot program that would permit market participants to display, rank, or accept from any person, a bid or offer or order in a tick increment smaller than $0.01. *See* Letter from Chris Isaacson, Chief Operating Officer, BATS Exchange, Inc., Eric Noll, Executive Vice President, NASDAQ OMX Group, Inc., and Larry Leibowitz, Chief Operating Officer, NYSE Euronext, Inc. to Elizabeth M. Murphy, Secretary, Commission, dated on April 30, 2010 (''BATS/NASDAQ/NYSE Letter'') and available at *http://www.sec.gov/spotlight/regnms/jointnmsexemptionrequest043010.pdf.* The petitioners stated their belief that the $0.01 MPV has resulted in artificially wide publicly-displayed quotes for certain lower-priced, liquid securities, which has negatively impacted the public price discovery process and resulted in inferior execution prices for investors. The petitioners requested the Commission to implement a six-month pilot program to permit sub-penny quoting at $0.005 in certain securities trading between $1.00 and $20.00 (the securities are listed on the Appendix to the petitioners' letter and included an exchange-traded fund (QQQQ), which trades at a price greater than $20.00). The petitioners stated their belief that allowing a smaller MPV for certain lower-priced, but liquid, securities would allow competitive market forces to better reflect an approximation of a stock's value.

[18] For a complete discussion of these studies *see Report to Congress on Decimalization* (July 2012) available at *http://www.sec.gov/news/studies/2012/decimalization-072012.pdf* (''Decimalization Report'').

[19] *See id.*

[20] *See* Decimalization Report at 18. The Decimalization Report also examined the level of small company IPOs in other countries during the time before and after decimalization to assess whether other countries had experienced declines in small company IPOs like the U.S. experienced. An examination of other countries' IPO activities did not show a decline like that experienced in the U.S., even in those countries that have smaller tick sizes.

[21] More information on the committee is available at *http://www.sec.gov/info/smallbus/acsec.shtml.*

isolate the impact of decimalization on small company IPOs from other concurrent factors, such as the enactment of the Sarbanes-Oxley Act in 2002, the Global Analyst Research Settlement in 2003, and the emergence of high frequency trading and dark pools. As discussed further below, the Small Company Advisory Committee continued to evaluate the issues raised by decimalization and its impact on small capitalization companies, and issued recommendations in February 2013.[22]

While the Decimalization Report did not reach any firm conclusions about the impact of decimalization on the number of IPOs or the liquidity and trading of small capitalization companies, it did recommend that the Commission continue to study this area. The Decimalization Report specifically suggested a public roundtable, where recommendations could be presented on a pilot program that would generate data to allow the Commission to further assess decimalization's impact. On February 5, 2013, the Commission staff held a Decimalization Roundtable with participation from a wide range of market participants, academics, and others. Many of the panelists were of the view that factors other than decimalization were more significant factors in the decline in IPOs in recent years. While views differed on the likely outcome of any increase in the minimum tick size, there was broad support among the panelists for the Commission to conduct a pilot program to gather further information, particularly with respect to the impact of wider tick sizes on liquidity in small capitalization companies.[23] This view was reflected in comment letters submitted to the Commission in advance of the Roundtable.[24] Some panelists, however, expressed concern about the potential costs to investors of wider minimum tick sizes.[25]

Since the Decimalization Roundtable, discussions have continued with respect to the possibility of raising the minimum tick sizes for small capitalization stocks, and the prospect of a pilot program to test the impact thereof. The Small Company Advisory Committee, in March 2013, recommended that the Commission adopt rules that would allow small exchange-listed companies to choose their own minimum tick size from a limited range designated by the Commission.[26] In the view of the Small Company Advisory Committee, the economic incentives provided by wider minimum tick sizes would encourage market making and research analyst coverage, and thereby enhance the attractiveness of the IPO market for small companies and their ability to raise capital.

In November 2013, the Equity Capital Formation Task Force (''ECFTF'')[27] issued to the U.S. Department of the Treasury its report: *From the On-Ramp to the Freeway: Refueling Job Creation and Growth by Reconnecting Investors with Small-Cap Companies* (''ECFTF Report'').[28] The ECFTF recommended, among other things, that the exchanges conduct a pilot program, overseen by the Commission, that would establish the Small-cap Trading Rules (''STaR'') where, companies with a market capitalization below $750 million would be quoted in $0.05 increments and would trade only at the bid, the offer, or the mid-point between the bid and the offer.

More recently, on January 31, 2014, the Commission's Investor Advisory Committee (''Investor Advisory Committee''),[29] recommended that the Commission not conduct a pilot program to study increased minimum tick sizes for small-capitalization companies.[30] In general, the Investor Advisory Committee expressed concern that a pilot that widens the minimum quoting increment would

[22] *See* note 26 *infra.*

[23] There was some discussion at the Roundtable about the BATS/NASDAQ/NYSE Letter, which requested the implementation of a sub-penny pilot, *see supra* note 17. *See also* letter from Chris Isaacson, SVP & COO and Eric Swanson, Secretary, BATS Global Markets to Elizabeth M. Murphy, Secretary, Commission, dated January 29, 2013). In general, some panelists suggested that adding narrower ticks to a pilot could counterbalance the negative issues related to the potentially increased costs to investors for the widening of spreads in small stocks. However, panelists noted that institutional investors and issuers were not supportive of narrower tick sizes and one panelist suggested that any pilot should be limited to the small cap issuers to keep it simple and targeted for the market.

[24] *See e.g.* letters from Chris Isaacson, SVP & COO, and Eric Swanson, Secretary, BATS Global Markets, Inc., dated January 29, 2013 (suggesting a tick size pilot could be used to determine the optimal tick size for enabling efficient price discovery, while maintaining low transaction costs for investors, and improving efficient access to capital for small and middle capitalization companies), David Weild, Senior Advisor, Grant Thornton LLP, dated January 29, 2013 (indicating the belief that the implementation of a tick size pilot could be a step in increasing the number of initial public offering), Paul Jiganti, Managing Director, Market Structure Client Advocacy, TD Ameritrade, Inc., dated February 4, 2013 (indicating support for a tick size pilot and suggesting that such a pilot should focus on trading volume, price, volatility, and to a lesser extent, market capitalization), Patrick J. Healy, CEO, Issuer Advisory Group, dated February 4, 2013 (indicating the belief that while decimalization has been beneficial to the market, they would support a tick size pilot that would focus on less liquid companies), Colin Clark, Senior Vice President, NYSE Euronext, dated February 5, 2013 (suggesting that less liquid companies could benefit from increased tick sizes and that a pilot program could provide the Commission with data that can be utilized in a cost-benefit analysis to determine whether or not to make the pilot permanent), and Jeffrey M. Solomon, Chief Executive Officer, Cowen and Company, dated February 5, 2013 (suggesting that a pilot program could provide economically feasible means for investment banks to provide research on small capitalization stocks).

[25] A transcript of the Decimalization Roundtable is available at *http://www.sec.gov/news/otherwebcasts/2013/decimalization-transcript-020513.txt.* In addition, comments received by the Commission are available at *http://www.sec.gov/comments/4-657/4-657.shtml.* Since the roundtable, the Commission has received eleven additional comment letters. Generally, these later commenters expressed support for a pilot program to test wider tick size for smaller capitalization companies. *See, e.g.,* letters from David Weisberger, Executive Principal, Two Sigma Securities, dated April 23, 2013; Stuart J. Kaswell, Executive Vice President and Managing Director, General Counsel, Managed Funds Association, dated May 1, 2013; Ernest F. Callipari, Equity Trader, dated May 29, 2013; Daniel Keegan, Managing Director, Head of Equities for the Americas, Citigroup Global Markets Inc., dated October 22, 2013 (commenting that pilot program should apply to illiquid stocks of all sizes); and Joseph Saluzzi, Partner, Themis Trading LLC, dated November 20, 2013. One commenter suggested that the Commission set the MPV at five cents. *See* letter from James J. Maguire, Sr., to Chair White, dated January 21, 2014.

[26] *See* Advisory Committee on Small and Emerging Companies, *Recommendations Regarding Trading Spreads for Smaller Exchange-Listed Companies* (February 1, 2013) available at *http://www.sec.gov/info/smallbus/acsec/acsec-recommendation-032113-spread-tick-size.pdf.*

[27] The Equity Capital Formation Task Force is comprised of representatives from mutual funds, venture capital firms, exchanges, broker-dealers, academics, investor relations advisors and securities industry trade groups. The task force was formed in June 2013 to: (1) Examine the challenges that startups and small-cap companies face in raising equity capital in the public market environment, and (2) develop recommendations for policy-makers that will help such companies gain greater access to the capital they need to grow their businesses and generate private sector job growth.

[28] This report is available at *http://www.equitycapitalformationtaskforce.com/files/ECF%20From%20the%20On-Ramp%20to%20the%20Freeway%20vF.pdf.*

[29] The Investor Advisory Committee was established by Section 911 of the Dodd-Frank Wall Street Reform and Consumer Protection Act (''Dodd-Frank Act''), to advise the Commission on regulatory priorities, the regulation of securities products, trading strategies, fee structures, the effectiveness of disclosure, and on initiatives to protect investor interests and to promote investor confidence and the integrity of the securities marketplace. The Dodd-Frank Act authorizes the Investor Advisory Committee to submit findings and recommendations for review and consideration by the Commission. *See* Section 911 of the Dodd-Frank Act, Pub. L. 111–203, 124 Stat. 1376 (2010).

[30] The Investor Advisory Committee recommendations are available at *http://www.sec.gov/spotlight/investor-advisory-committee-2012/decimal-pricing-draft-recommendation-iac.pdf.* A member of the IAC dissented from this recommendation and recommended that the Commission conduct a pilot program with respect to modified decimal pricing. The dissenting opinion is available at *http://www.sec.gov/spotlight/investor-advisory-committee-2012/dissenting-opinion-decimalization-iac.pdf.*

disproportionately harm retail investors because their trading costs would rise.[31] If the Commission determines to conduct a tick size pilot,[32] however, the Investor Advisory Committee recommended that any such pilot: (a) Should be short-term, with a guaranteed sunset unless benefits are proven to outweigh the costs; (b) should be designed to measure the costs and benefits to investors, with a particular focus on retail investors; and (c) should not focus exclusively on increasing tick size, but also on other changes that could encourage appropriate trading, enhance liquidity, or facilitate capital formation.[33]

II. Discussion

Section 11A(a)(2) of the Act[34] directs the Commission, having due regard for the public interest, the protection of investors, and the maintenance of fair and orderly markets, to facilitate the establishment of a national market system for securities. Section 11A(a)(3)(B) provides the Commission the authority to require the SROs, by order, ''to act jointly . . . in planning, developing, operating, or regulating a national market system (or a subsystem thereof).''[35]

The Commission believes that it is in the public interest for the Participants to develop and file with the Commission a Tick Size Pilot Plan, with the terms and conditions set forth in Section III below, as a national market system (''NMS'') plan pursuant to Rule 608(a) of Regulation NMS.[36] Once filed, the Commission would publish the Tick Size Pilot Plan for public comment, and thereafter consider whether to approve it, in accordance with Rule 608(b) of Regulation NMS.[37]

Decimalization of the U.S. equity markets occurred over a decade ago. Since that time, the nature of trading, the structure of the markets, and the roles of market participants have changed significantly.[38] As discussed above, concerns have been expressed from a variety of sources that decimalization, and the associated one penny MPV, may have had a detrimental impact on the trading and liquidity of small capitalization stocks.[39] Therefore, the Commission believes that it is in the public interest for the Commission to further study and assess decimalization's impact on the liquidity and trading of the securities of small capitalization companies.[40] The submission of proposed NMS plan for a Tick Size Pilot Plan will provide the Commission with the means to continue to gather further information and views on the impact of decimalization on the liquidity and trading of the securities of small capitalization companies. In addition, a proposed NMS plan for a Tick Size Pilot Plan would allow the Commission to gather further comments on whether a Tick Size Pilot Plan is a viable vehicle by which the Commission could gather data to test whether a wider tick benefits small capitalization companies and their investors.

In the Decimalization Report, the Commission staff reviewed academic literature related to the impact of decimalization on the U.S. equity markets. While the academic literature indicated a number of potential benefits from decimalization, such as an overall reduction in effective and quoted spreads, there was some evidence that, at least for NASDAQ small capitalization stocks, the decline was not statistically significant.[41] The academic literature also found, post-decimalization, evidence of a decline in quoted depth on average (although cumulative depth at competitive prices did not appear to change), smaller trade sizes, and an increase in the total time to work institutional orders.[42] In addition, the Decimalization Report noted that the U.S. has an essentially flat, ''one size fits all'' tick size regime, as compared with many foreign jurisdictions that have adopted tiered regimes where the tick size varies depending on the price level of a stock.[43] Finally, at the Decimalization Roundtable, there was broad support among the panelists for the Commission to conduct a pilot program with respect to the impact of wider tick sizes on liquidity in small capitalization companies, even though views differed on the likely outcome of the pilot.[44]

Support for a pilot program is not universal, however, particularly given that an increase in minimum tick sizes may raise costs for investors. This view was reflected, for example, at the Roundtable and in the recommendations of the Investor Advisory Committee.[45]

Nevertheless, the Commission believes that legitimate questions have been raised as to whether the minimum tick size regime for the U.S. equity markets should be refined and enhanced. Specifically, the Commission preliminarily believes that it should assess, through a targeted short-term pilot program, whether wider minimum tick sizes for small capitalization stocks would enhance market quality to the benefit of market participants, issuers and U.S. investors. The Commission preliminarily believes that such a pilot should facilitate studies of the effect of tick size on liquidity, execution quality for investors, volatility, market maker profitability, competition, transparency and institutional ownership. The Commission has set forth the details of a pilot program that the Commission preliminarily believes would produce measurable data that would allow the Commission and others to conduct such studies.

Further, the Commission preliminarily believes that the pilot described below is sufficiently limited so as to not cause excessive disruption to the market. The Commission preliminarily believes that the terms of the Tick Size Pilot Plan and the securities to be included should mitigate potential harm to investors in the form of increasing transaction costs, as expressed by the Investor Advisory Committee. The Commission would examine the data generated to measure, among other things, any change in transaction costs.

The Commission is ordering the Participants to jointly file the Tick Size Pilot Plan to assure that the pilot

[31] The Investor Advisory Committee suggested that, if the Commission believes additional steps are needed to promote capital formation or enhance liquidity for smaller capitalization securities, the Commission should consider all approaches, such as, requiring the display of depth-of-book of orders, restricting certain jumping ahead strategies, and rules that better assure the validity of displayed quotes. *See* Investor Advisory Committee recommendations, supra note 30.

[32] The Investor Advisory Committee noted that if the Commission nevertheless were to propose a pilot, it would review the details of the proposal and potentially reconsider its recommendation. *See* Investor Advisory Committee recommendations, supra *note* 30.

[33] The Commission continues to review the findings and recommendations of the Investor Advisory Committee. *See* Section 911(g) of the Dodd-Frank Act.

[34] 15 U.S.C. 78k–1(a)(2).

[35] 15 U.S.C. 78k–1(a)(3)B).

[36] 17 CFR 242.608(a).

[37] 17 CFR 242.608(b).

[38] *See e.g.,* Concept Release, *supra* note 14.

[39] *See e.g., Rebuilding the IPO On-Ramp,* presented to the U.S. Department of Treasury (2011) (''IPO Task Force Report''); David Weild and Edward Kim, *Market Structure is Causing the IPO Crisis—and More,* Grant Thornton Capital Markets Series (June 2010).

[40] The Commission notes that some market participants have recommended that the Commission implement a pilot program that would permit tick increments smaller than $0.01. *See* BATS/NASDAQ/NYSE Letter, *supra* note 17. The Commission continues to evaluate this petition. At this time, however, the Commission preliminarily believes that the Tick Size Pilot Plan should focus on the impact of wider ticks on the trading and liquidity of smaller companies for the reasons discussed herein.

[41] *See* Decimalization Report.

[42] *See id.*

[43] *See id.*

[44] *See supra* note 25 and accompanying text.

[45] *See supra* notes 29 to 33 and accompanying text.

program, if ultimately approved by the Commission, applies uniformly across the U.S. markets. Once the Participants file the Tick Size Pilot Plan with the Commission, it will be published for public comment, and the Commission will carefully evaluate the comments received as the Commission considers whether to approve the Tick Size Pilot Plan.[46]

III. Tick Size Pilot Plan

The Commission hereby orders the Participants to develop and jointly file with the Commission, as an NMS plan pursuant to Rule 608(a) of Regulation NMS,[47] a Tick Size Pilot Plan with the following terms and conditions:

- Duration. The length of the pilot program (''Pilot'') contemplated by the Tick Size Pilot Plan shall be one year. The Commission notes that there has been broad discussion about how long a pilot should run.[48] The Commission preliminarily believes that a one-year time period would generate sufficient data to reliably analyze the effects and impact of wider tick size.[49] The Commission preliminarily believes that the Participants should monitor the data generated during the Pilot Period.[50] The Commission expects that the data produced during the Pilot Period should allow the Commission and Participants to monitor the impact of the Pilot on the market and investors. Further, the Commission would engage in a proactive, ongoing review of the data that could inform whether any modifications of the Pilot are necessary.
- Securities. The securities to be included in the Pilot shall be securities that are NMS common stocks with: (1) A market capitalization of $5 billion or less; (2) an average daily trading volume of one million shares or less; and (3) a share price of $2 per share or more (''Pilot Securities''). The Commission preliminarily believes that these criteria will capture the securities of smaller and middle capitalization companies with low liquidity and trading activity and should provide the Pilot with a broad sample on which to test the impact of wider tick sizes.[51] Requiring stock prices to be $2 or more per share assures that ''sub-penny stocks'' [52] are not included in the Pilot.

In addition, these thresholds are not set directly by the tick size so they are relatively exogenous, which could help to inform the Commission about any potential rulemaking based on the results of the Pilot. Overall, because the stocks below these thresholds have higher average effective spreads, the thresholds, though exogenous help to target the pilot towards those stocks most likely to benefit from a larger tick size. Finally, this group is broad enough to allow researchers to examine various threshold levels for potential rulemaking.

- Pilot Design. The Pilot should consist of one control group and three test groups with 300 Pilot Securities in each test group. The selection of Pilot Securities to be included in each test group should involve stratified sampling by market capitalization and price. The Commission preliminarily believes that choosing three relatively small test groups would minimize any potential disruption to the current market.[53] The Commission also preliminarily believes that having a control group is vital to test the effects of larger tick size, and that a control group with the current quoting and trading increments would best represent a baseline for the analysis of the effect of the pilot. Further, the Commission preliminarily believes that three test groups should generate sufficient data to test a variety of potential changes, described below. Finally, the Commission preliminarily believes that the inclusion of 300 Pilot Securities per test group should allow each test group to be statistically large enough to generate data to reliably test for the effects of larger tick size and to examine thresholds for any potential rulemaking in the future.[54]
- Control Group. Pilot Securities in the Control Group shall be quoted at the current tick size increment, $0.01 per share, and trade at the increments currently permitted.
- Test Group One. Pilot Securities in Test Group One would be quoted in $0.05 minimum increments. Trading could continue to occur at any price increment that is permitted today. The Commission preliminarily believes that the $0.05 minimum quoting increment is appropriate. Commission staff's preliminarily analysis of the Pilot Securities [55] indicates that a significant percentage of Pilot Securities have bid-ask spreads greater than $0.05. Therefore, the Commission believes that the five cent increment should be relatively conservative so as to limit increases in transaction costs for investors.[56] In addition, for those securities that currently have spreads greater than $0.05, the introduction of a minimum quoting increment would prevent market participants from ''pennying'' quotes, (*i.e.,* improving the displayed quote by only one penny to gain execution priority) as quotes will be made in 5 cent increments. Finally, the 5 cent minimum quoting increment

[46] 17 CFR 242.608(b).

[47] 17 CFR 242.608(a).

[48] *See e.g.,* Letters from Jeffrey M. Solomon, Chief Executive Officer, Cowen and Company, dated February 5, 2013 (suggesting a pilot term of 7 years); David Weild, Senior Advisor, Grant Thornton LLP, dated January 29, 2013 (suggesting a pilot term of 5 years); Colin Clark, Senior Vice President, NYSE Euronext, dated February 5, 2013 (suggesting a pilot term of no longer than one year); David Weisberger, Executive Principal, Two Sigma Securities, dated April 23, 2013 (suggesting a pilot term of at least one year); and Daniel Keegan, Managing Director, Head of Equities for the Americas, Citigroup Global Markets, Inc., dated October 22, 2013 (suggesting a pilot term of one year). *See also,* the Investor Advisory Committee recommendations, *supra* note 30, which recommended that any pilot be short-term, with a guaranteed sunset.

[49] These preliminary beliefs are based on analysis of power statistics for relevant liquidity measure, *e.g.,* trading volume. Being able to examine a subset of stocks facilitates the examination of potential threshold levels.

[50] During the Pilot Period, the Commission preliminarily believes that Participants should notify the Commission if they detect any broadly negative impact of the Pilot on market quality.

[51] The market capitalization and average daily trading volume thresholds are based on a staff examination of effective spreads. Stocks above these thresholds typically have effective spreads below $0.02. Stocks below these thresholds vary with some in the $0.01 range but most above $0.02 and a substantial percentage above $0.05. These thresholds should capture the stocks that would benefit most from an increased tick size while still allowing researchers to assess which stock characteristics might be correlated with positive results from larger tick sizes and which would be correlated with negative results from larger tick sizes.

[52] ''Sub-penny stocks'' are NMS stocks with a stock price below $1 that have a minimum quote increment of $0.0001 under current rules. The threshold of $2 was chosen to mitigate the effect of NMS stocks for which stock prices may decline to below $1 during the pilot period.

[53] Some commenters suggested that a pilot test several tick sizes. *See e.g.,* Letter from David Weild, Senior Advisor, Grant Thornton LLP, dated January 29, 2013 (suggesting five tick increments of $0.25, $0.10, $0.05, $0.02, and $0.01); and Jeffrey M. Solomon, Chief Executive Officer, Cowen and Company, dated February 5, 2013 (suggesting four tick increments of $0.20, $0.10, $0.05 and $0.01). At this time, the Commission is concerned about the cost and complexity of a pilot that contains more test groups. *See e.g.,* Letter from David Weisberger, Executive Vice President, Two Sigma Securities, dated April 23, 2013 to Elizabeth M. Murphy, Secretary, Commission (''We urge the Commission to keep the design of the pilot simple. Simplicity will ensure timely implementation and reduce operational risks as most firms will have to conduct an extensive review of their trading software to comply with the pilot.'').

[54] These preliminary beliefs are based on staff analysis of power statistics for relevant liquidity measures, *e.g.,* trading volume. In particular, the staff focused on the least active stocks and assessed how many stocks would be needed to detect changes in daily liquidity measures. The staff selected 300 as a sample size to provide sufficient power to detect changes in liquidity measures for a subset of pilot stocks.

[55] *See supra* note 51.

[56] The transaction cost is measured by the difference of an investor buying a security at the offer and then immediately selling the same security at the bid. Thus, the wider the minimum quoting increment, the greater the transaction cost would be for such round trip trade.

will allow data to be developed to test whether liquidity increases due to the aggregation of liquidity at the 5 cent increments for these securities.

There are other Pilot Securities that currently have spreads that are less than $0.05. The spreads in these Pilot Securities would be directly impacted. However, their inclusion in the Pilot would allow data to be developed to study the impact on liquidity for these stocks as well. Moreover, trading in this group can occur at any price increment allowable today, so the data generated from this group should isolate the effects of an increased quoting increment.

The $0.05 minimum quoting increment is significantly larger than the current $0.01 but smaller than the 1/16th of $1.00 increment used immediately prior to decimalization. Relative to the alternative minimum quoting increments that could be considered, the Commission preliminarily believes $0.05 provides a good balance between assuring the ability to measure the hypothesized effect, if it exists, and mitigating any potential harm to liquidity as a result of a tick size that is too large. Therefore, the Commission preliminarily believes that a $0.05 minimum quoting increment should be sufficient to test the effects of a larger minimum quoting increment for the Pilot Securities. The Commission preliminarily believes that changing the minimum quoting increment for Test Group One would generate data about the impact of changing the minimum quoting increment, and only the minimum quoting increment, for the Pilot Securities overall.

- Test Group Two. Pilot Securities in Test Group Two would be quoted in $0.05 minimum increments, and traded in $0.05 minimum increments subject to certain exceptions. The following exceptions from the $0.05 minimum trading increment would be permitted: (1) Trading could occur at the mid-point between the national best bid or offer (''NBBO''); (2) retail investor orders could be provided with price improvement that is at least $0.005 better than the NBBO (*i.e.,* 10% of the $0.05 tick size); and (3) certain negotiated trades (*i.e.,* trades with a performance target such as volume-weighted average price trades and time-weighted average price trades;[57] and qualified contingent trades[58]) could continue to occur at any price increment that is permitted today.

The Commission preliminarily believes that changing the quoting increment alone may not be adequate to test the effects of larger tick size. The Commission preliminarily believes that if the minimum quoting increment is changed without corresponding changes to the minimum trading increment, market participants may be hesitant to display liquidity because of the ability to step ahead of wider quotes. Therefore, the Commission preliminarily believes that a test group should be established to examine this potential impact on displayed liquidity in conjunction with Test Group One.[59] The Commission also preliminarily believes that limited exceptions to the trading increment should be allowed so as not to prohibit certain categories of trades that are broadly beneficial to market participants today. First, negotiated trades such as volume-weighted average price trades or time-weighted average price trades are used to execute a trading strategy over volume or time. By their definition, the price to be executed with these negotiated trades would not be at the NBBO or a $0.05 increment.[60] In addition, retail orders often receive price improvement to the benefit of retail investors.[61] The Commission preliminarily believes that preserving retail investors' ability to receive price improvement on their orders would limit a potential negative impact of the Pilot on costs for retail investors.[62] The Commission preliminarily believes that changing the quoting increment and trading increment for Test Group Two could generate useful data on the effects of quoting and trading increments on the Pilot Securities.

- Test Group Three. Pilot Securities in Test Group Three would be subject to the same minimum quoting and trading increments (and exceptions thereto) as Test Group Two, but in addition would be subject to a ''trade-at'' requirement. Generally, a trade-at requirement is intended to prevent price matching by a trading center not displaying the NBBO. Under a trade-at requirement, a trading center that was not displaying the NBBO at the time it received an incoming marketable order could: (1) Execute the order with significant price improvement (such as the minimum allowable $0.05 increment or the mid-point between the NBBO),[63] (2) execute

[57] A volume-weighted average price trade is calculated by summing up the products of the number of shares traded and the respective share price, and dividing by the total number of shares bought. A time-weighted average price trade is calculated as the average price of a security over a specified period of time.

[58] A qualified contingent trade is a transaction consisting of two or more component orders, executed as agent or principal, where: (1) At least one component order is in an NMS stock; (2) all components are effected with a product or price contingency that either has been agreed to by the respective counterparties or arranged for by a broker-dealer as principal or agent; (3) the execution of one component is contingent upon the execution of all other components at or near the same time; (4) the specific relationship between the component orders (*e.g.,* the spread between the prices of the component orders) is determined at the time the contingent order is placed; (5) the component orders bear a derivative relationship to one another, represent different classes of shares of the same issuer, or involve the securities of participants in mergers or with intentions to merge that have been announced or since cancelled; (6) the transaction is fully hedged (without regard to any prior existing position) as a result of the other components of the contingent trade; and (7) the transaction that is part of a contingent trade involves at least 10,000 shares or has a market value of at least $200,000.

[59] A pilot with Test Group Two alone cannot examine the issue. A comparison of Test Group Two to Test Group One can test the incremental effect of adding trading increments to wider quoting increments.

[60] The Commission staff has previously stated that, with respect to Rule 612 of Regulation NMS a performance target is not generally a price subject to Rule 612 as long as it is not used analogously to a limit price for ranking or displaying an order. However, if the performance target were an explicit impermissible sub-penny price and also served as a limit price, then accepting the order would be a violation. Similarly, if the customer specifies a limit price in addition to the performance target, the limit price must meet the requirements of the Rule. Available at (*http://www.sec.gov/divisions/marketreg/subpenny612faq.htm*). The negotiated trade exception contained herein would be subject to the same general principle, *i.e.,* the trades must not be designed to explicitly circumvent the trading increment.

[61] *See e.g.,* BATS BYX Rule 11.24; Nasdaq Rule 4780; NYSE Rule 107C; NYSE Arca Equities Rule 7.44; and NYSE MKT Rule 107C.

[62] Today, retail investors typically receive price improvement on their orders over the NBBO. The Concept Release noted that in 2009, the eight broker-dealers with significant retail customer accounts route nearly 100% of their customer market orders to over-the-counter market makers for execution. *See* Concept Release, *supra* note 14. *See also* Letters from David Weisberger, Executive Principal, Two Sigma Securities, dated April 23, 2013 (''As a further protection against increased costs, the Commission should continue to permit executions at prices between the minimum quoting increments. Banning such executions would not only add to the complexity of evaluating the pilot's results, but would effectively deprive retail and institutional investors of an opportunity to receive price improvement.'') to Elizabeth Murphy, Secretary, Commission; and Paul Jiganti, Managing Director, Market Structure and Client Advocacy, TD Ameritrade dated October 31, 2013 (''If there is going to be a tick size pilot program, we recommend that it is controlled, limited in scope and time, and one that does not compromise the benefits retail customers receive from Regulation NMS.'') to the Honorable Mary Jo White, Chair, Commission. *But see* letter from Joseph Saluzzi, Partner, Themis Trading LLC, dated November 20, 2013 (recommending that the trading increments under a pilot be limited to the bid, the offer or the mid-point between the two. ''Allowing internalizers to jump ahead of displayed liquidity for de minimis price improvement would continue to discourage displayed liquidity and harm the price discovery process.'').

[63] For retail investor orders, trading centers would be required to provide the minimum price improvement of 10% of the $0.05 tick size as described under Test Group 2.

the order at the NBBO with significant size improvement if the size of the order was of block size [64], or (3) route intermarket sweep orders [65] to execute against the full displayed size of protected quotations at the NBBO and then execute the balance of the order at the NBBO price.

The Commission preliminarily believes that a trade-at requirement should be included in the Pilot.[66] When quoting and trading increments are widened in the absence of a trade-at requirement, the Commission preliminarily believes there is a possibility trading volume could migrate away from ''lit venues''—trading venues that provide public pre-trade transparency by displaying the best-priced quotations—to ''dark venues'' that do not provide such public pre-trade price transparency. The percentage of trading volume executed in dark venues has increased in recent years. In 2009, trading volume executed in dark venues was approximately 25 percent. Today, it is approximately 35 percent.[67] The Commission believes that if trading volume in Test Group Two Pilot Securities moves to undisplayed trading centers, then including the trade-at requirement in Test Group Three could test whether trading remains on lit venues and what impact, if any, the migration of trading from lit venues to dark venues would have on liquidity and market quality for the Pilot Securities.

Therefore, the Commission preliminarily believes that the Pilot should test whether a trade-at requirement would stem the potential migration of trading volume away from these lit venues. The inclusion of a trade-at requirement would allow the Commission generate and analyze data on the impact of a trade-at requirement in conjunction with wider tick sizes. In particular, a comparison of Test Group Three to Test Group Two would provide insight into the incremental effects of a trade-at requirement.

- SRO Data for the Tick Size Pilot. The Commission preliminarily believes that the following data should be collected and transmitted to the Commission and made available to the public in an agreed-upon format on the frequency noted below. The Commission intends to study such data to assess the impact of the changes made under the Pilot. The Commission believes that making the data available to the public, in an agreed-upon format would facilitate the public's ability to assess the impact of the pilot.
- Identification of Pilot Securities. On each day during the Pilot, the primary listing exchanges should make publicly available the list of stocks included in each Test Group, adjusting for ticker symbol changes and relevant corporate actions, as set forth in *Annex A.*
- Pilot Data. The Commission preliminarily believes that the Participants should provide to the Commission the data set forth in *Annex B* or explain in the NMS Plan any data alternatives that would to the same extent facilitate the studies of the effect of tick size mentioned in this order. All data must be provided in an agreed-upon format, on a monthly basis and made publicly available. The data should be provided for dates starting six months prior to the Pilot period through six months after the end of the Pilot period. The Commission intends to study such data to assess the impact of the changes made under the Pilot.
- Assessments. The Commission preliminarily believes that the Participants, either individually or jointly, should provide to the Commission and make publicly available their assessment of the impact of the Pilot no later than six months after the end of the Pilot Period, as follows:

A. Assess the statistical and economic impact of an increase in the quoting increment on market quality.

B. Assess the statistical and economic impact of an increase in the quoting increment on the number of market makers.[68]

C. Assess the statistical and economic impact of an increase in the quoting increment on market maker participation.

D. Assess the statistical and economic impact of an increase in the quoting increment on market maker profits.

E. Assess the statistical and economic impact of an increase in the quoting increment on market transparency.

F. Evaluate whether any thresholds can differentiate the results of the above assessments across stocks (*e.g.,* whether stocks above the threshold have negative effects while stocks below the threshold have positive effects).

G. Assess the statistical and economic impact of the above assessments for the incremental impact of a trading increment and for the joint effect of an increase in a quoting increment with the addition of a trading increment.

H. Assess the statistical and economic impact of the above assessments for the incremental impact of a trade-at rule and for the joint effect of an increase in a quoting increment with the addition of a trading increment and a trade-at rule.

I. Assess any other economic issues that the Participants believe the Commission should consider in any rulemaking that may follow the Pilot.

It is hereby ordered, pursuant to Section 11A(a)(3)(B) of the Act,[69] that the Participants act jointly in developing and filing with the Commission, as an NMS plan pursuant to Rule 608(a) of Regulation NMS,[70] a Tick Size Pilot Plan, as described above. The Participants are ordered to file with the Commission such Tick Size Pilot Plan no later than August 25, 2014.

By the Commission.

Kevin M. O'Neill,

Deputy Secretary.

Annex A

These datasets can include additional fields as agreed upon by the Participants.

1. A dataset identifying pilot stocks containing the following fields in a pipe delimited format with the field names as the first record. The SROs should use consistent file name formats.

(a) Ticker Symbol
(b) Security Name
(c) Listing Exchange
(d) Date
(e) Tick Size Pilot Group—character value of

[64] Block size refers to an order that is (1) at least 10,000 shares or (2) for a quantity of stock having a market value of at least $200,000. *See* Rule 600(b)(9) of Regulation NMS, 17 CFR 242.600(b)(9).

[65] Intermarket sweep orders are exceptions provided in Rule 611(b)(5) and (6) of Regulation NMS that enable an order router to sweep one or more price levels simultaneously at multiple trading centers without violating trade-through restrictions. As defined in Rule 600(b)(30) of Regulation NMS, intermarket sweep orders must be routed to execute against the full displayed size of any protected quotation that otherwise would be traded through by the orders. *See also* Responses to Frequently Asked Questions Concerning Rule 611 and Rule 610 of Regulation NMS, Question 4.04 (April 4, 2008 Update) (available at *http://www.sec.gov/divisions/marketreg/nmsfaq610-11.htm*).

[66] One commenter supports the inclusion of a trade-at requirement in a tick pilot. *See* letter from Christopher Nagy, CEO, and David Lauer, President, KOR Group LLC, to Ms. Murphy, Commission, dated April 4, 2014.

[67] *See* OTC Trading: Description of Non-ATS OTC Trading in National Market System Stocks by Laura Tuttle, March 2014 (available at *http://www.sec.gov/marketstructure/research/otc_trading_march_2014.pdf*); Equity Market Structure Literature Review Part I: Market Fragmentation by Staff of the Division of Trading and Markets, October 7, 2013 (available at *http://www.sec.gov/marketstructure/research/fragmentation-lit-review-100713.pdf*); and Alternative Trading Systems: Description of ATS Trading in National Market System Stocks by Laura Tuttle, October 2013 (available at *http://www.sec.gov/marketstructure/research/alternative-trading-systems-march-2014.pdf*).

[68] The term ''market makers'' includes all registered market makers and other registered liquidity providers.

[69] 15 U.S.C. 78k-1(a)(3)(B).

[70] 17 CFR 242.608(a).

(1) ''C'' for stocks in the Control Group
(2) ''G1'' for stocks in Test Group One
(3) ''G2'' for stocks in Test Group Two
(4) ''G3'' for stocks in Test Group Three

2. A dataset that identifies changes in the pilot ticker symbols on that day containing the following fields and in a pipe delimited format with field names as the first record. The SROs should use consistent file name formats.

(a) Ticker Symbol
(b) Security Name
(c) Listing Exchange
(d) Effective Date
(e) Deleted Date
(f) Tick Size Pilot Group—character value of
(1) ''C'' for stocks in the Control Group
(2) ''G1'' for stocks in Test Group One
(3) ''G2'' for stocks in Test Group Two
(4) ''G3'' for stocks in Test Group Three
(g) Old Ticker Symbol(s)
(f) Reason for the change—character value agreed upon by SROs

Annex B

These datasets can include additional fields as agreed upon by the SROs. The data need only include stocks meeting the thresholds for inclusion in one of the three Test Groups and the Control Group as of the date of selection.

A dataset of daily market quality statistics of orders by security, order type, original order size (as observed by SRO), hidden status, and coverage under Rule 605 in a pipe delimited format with field names as the first record:

1. Minimum Fields: Same as Rule 605 fields, except as modified below, and, as defined below, Rule 605 Coverage, Hidden Status, Original Percentage Hidden, and Final Percentage Hidden.

2. The SRO should include only orders executed on their exchanges (or OTC in the case of FINRA).

3. The order size should be the original order size as observed by the SRO.

4. Modified order size categories (slightly different than Rule 605): Less than 100, 100 to 499 shares, 500 to 1999 shares, 2000 to 4999 shares, 5000 to 9999 shares, and 10000 or greater shares.

5. Modified execution speed categories include: Orders executed from 0 to <100 microseconds, 100 microseconds to <100 milliseconds, 100 milliseconds to <1 second, 1 second to <30 seconds, 30 seconds to <60 seconds, 60 seconds to <5 minutes, 5 minutes to 30 minutes.

6. Hidden status should include orders for which the instructions indicate that the order is not displayable in part or full.

(a) Hidden status is a character variable with the values ''entirely displayable,'' ''partially displayable,'' and ''not displayable'' or other values as agreed upon by the SROs.

(b) Original Percentage Hidden is the percentage of shares not displayable as of order receipt, regardless of its placement relative to the quotes. For example, a buy order for 5000 shares with an instruction to not display 4000 shares would be 80% hidden regardless of whether it is greater than or less than the bid price.

(c) Final Percentage Hidden is the percentage of shares not displayed prior to final order execution or cancellations. For example, suppose a buy order for 5000 shares with an instruction to display not more than 1000 shares at a time. After the first 1000 shares execute a second 1000 is displayed. If the order is cancelled before any more executions, the final percentage hidden is 60%.

7. Orders to include: Market orders, marketable limit orders, inside-the-quote limit orders, at-the-quote limit orders, near-the-quote limit orders, and intermarket sweep orders (ISOs), including those not covered by Rule 605.

8. Rule 605 coverage: Indicate whether the order is covered in Rule 605 (''Yes'') or reason for not covered (character variable with the consistent values across SROs such as ''opening'', ''closing'', ''stop price'', ''full size'', ''short sale'', ''other tick/bid sensitive'', ''not held'', ''special settlement'', ''non-market,'' ''order size >10,000'', or other values as agreed upon by SROs).

A dataset of daily number of registered market makers [71] by security in a pipe delimited format with field names as the first record:

1. Minimum fields: SRO, number of registered market makers, number of other registered liquidity suppliers.

A dataset of daily market maker participation and trading profits of orders by security in a pipe delimited format with field names as the first record:

1. Minimum fields: SRO, total market maker share participation, total market maker trade participation, cross-quote market maker share participation, cross-quote market maker trade participation, inside-the-quote market maker share participation, inside-the-quote market maker trade participation, at-the-quote market maker share participation, at-the-quote market maker trade participation, outside-the-quote market maker share participation, outside-the-quote market maker trade participation, raw market maker realized trading profits, market maker realized trading profits net of fees and rebates, raw market maker unrealized trading profits.

2. Participation fields:

(a) Share participation: The number of shares purchased or sold by market makers in a principal trade, not including riskless principal. When aggregating across market makers, this should be a share-weighted average per market maker.

(b) Trade participation: The number of purchases and sales by market makers in a principal trade, not including riskless principal. When aggregating across market makers, this should be a trade-weighted average per market maker.

(c) Cross-quote participation refers to the market maker buying at or above the national best offer or selling at or below the national best bid at the time of the trade.

(d) Inside-the-quote participation refers to a trade price that is between the national best bid and offer prices at the time of the trade.

(e) At-the-quote (outside-the-quote) participation refers to a buy price that is equal to (less than) the national best bid price at the time of or immediately before the trade. In the case of downward moving national best bid, use the national best bid price immediately before the trade. Otherwise, use the national best bid price at the time of trade. For a sell price, use the same method with the national best offer price.

3. Trading profit fields:

(a) Realized trading profits are the difference between the market value of market maker sales (shares sold × price) and the market value of market maker purchases (shares purchased × price). Use a LIFO-like method for determining which share prices to use in the calculation. When aggregating across market makers, this should be a share-weighted average per market maker.

(b) Realized trading profits net of fees and rebates are the realized trading profits plus rebates the market maker collects from trading on that day minus access fees the market maker pays for trading on that day. If estimated before allocations of rebates and fees, use expected rebates and fees.

(c) Unrealized trading profits are the difference between the purchase or sale price of the end-of-day inventory position of the market maker and the official closing price. In the case of a

[71] The term ''market makers'' includes all registered market makers and other registered liquidity providers.

short position, subtract the closing price from the sale price. In the case of a long position, subtract the purchase price from the closing price.

A dataset of market orders and marketable limit orders in a pipe delimited format with field names as the first record.

1. Minimum fields: Ticker symbol, date, order receipt time, order type, order size in shares, order side (''B'', ''S'', or ''SS''), order price (if marketable limit), NB quoted price, NB quoted depth in lots, receiving market offer for buy or bid for sell, receiving market depth (offer for buy and bid for sell), indicator for quote leader, average execution price (share-weighted), executed shares, canceled shares, routed shares, routed average execution price (share-weighted), indicator for special handling instructions.

2. Quote variables:

(a) NB quoted price is the national best offer for buys and the national best bid for sells.

(b) NB quoted depth is the NBO depth for buys and NBB depth for sells.

(c) The indicator for quote leader is 1 if the receiving market was the first market to post the NBB for a sell or NBO for a buy.

3. Average execution price is a share-weighted average that includes only executions on the receiving market. Routed average execution price is a share-weighted average that includes only shares routed away from the receiving market.

4. Routed shares refers to the number of shares in the order that were routed to another exchange or market.

5. The indicator for special handling instructions should identify orders that contain instructions that could result in delayed execution or an execution price other than the quote.

[FR Doc. 2014–15205 Filed 6–27–14; 8:45 am]

BILLING CODE 8011–01–P

SECURITIES AND EXCHANGE COMMISSION

[Release No. 34–72452; File No. SR–ISE–2014–23]

Self-Regulatory Organizations; International Securities Exchange, LLC; Order Granting Approval of Proposed Rule Change, as Modified by Amendment No. 2, Regarding the Short-Term Option Series Program

June 24, 2014.

I. Introduction

On April 22, 2014, the International Securities Exchange, LLC (the ''Exchange'' or ''ISE'') filed with the Securities and Exchange Commission (''Commission''), pursuant to Section 19(b)(1) [1] of the Securities Exchange Act of 1934 (''Act''),[2] and Rule 19b–4 thereunder,[3] a proposed rule change to amend its rules governing the Short Term Option Series Program to introduce finer strike price intervals for standard expiration contracts in option classes that also have short term options listed on them (''related non-short term options''), and to remove obsolete rule text concerning the listing of new short term option series during the week of expiration. On May 1, 2014, the Exchange filed Amendment No. 2 to the proposal.[4] The proposed rule change, as modified by Amendment No. 2, was published for comment in the **Federal Register** on May 12, 2014.[5] The Commission received no comments on the proposal. This order approves the proposed rule change, as modified by Amendment No. 2.

II. Description of the Proposed Rule Change

On any Thursday or Friday that is a business day, the Exchange currently may list short term options that expire at the close of business on each of the next five Fridays that are business days and are not Fridays in which monthly or quarterly options expire.[6] These short term options may be listed in strike price intervals of $0.50, $1, or $2.50.[7] The Exchange may also list standard expiration contracts, which are listed in accordance with the regular monthly expiration cycle, in wider strike price intervals of $2.50, $5, or $10.[8] During the week prior to expiration only, the Exchange is permitted to list related non-short term option contracts in the narrower strike price intervals available for short term option series.[9] Since this exception to the standard strike price intervals is available only during the week prior to expiration, however, standard expiration contracts regularly trade at significantly wider intervals than their weekly counterparts.[10] As a result, the Exchange proposes to amend Supplementary Material .02(e) to Rule 504 and Supplementary Material .01(e) to Rule 2009 to permit the listing of related non-short term options in the same strike price intervals as allowed for short term option series at any time during the month prior to expiration, which begins on the first trading day after the prior month's expiration date, subject to the provisions of Rule 504(f).[11]

In addition, the Exchange noted that it recently adopted rule text that states that, notwithstanding any language to the contrary, short term options may be added up to and including on the expiration date.[12] Accordingly, the Exchange proposes to delete rule text that prohibits the opening of additional series listed pursuant to Supplementary Material .12 to Rule 504 and Supplementary Material .05 to Rule 2009 during the week of expiration.[13]

The Exchange also stated that is has analyzed its capacity, and represented that it and the Options Price Reporting Authority (''OPRA'') have the necessary systems capacity to handle any potential additional traffic associated with this proposed rule change.[14] In addition, the Exchange stated that it believes that its members will not have a capacity issue as a result of this proposal.[15] Furthermore, the Exchange stated that it does not believe the proposed rule change will cause fragmentation of liquidity.[16]

III. Discussion and Commission Findings

After careful review, the Commission finds that the proposed rule change is consistent with the requirements of the Act and the rules and regulations thereunder applicable to a national securities exchange.[17] In particular, the Commission finds that the proposed

[1] 15 U.S.C. 78s(b)(1).

[2] 15 U.S.C. 78a.

[3] 17 CFR 240.19b–4.

[4] Amendment No. 1 was filed on April 29, 2014 and withdrawn on May 1, 2014.

[5] *See* Securities Exchange Act Release No. 72098 (May 6, 2014), 79 FR 27006 (''Notice'').

[6] *See* Supplementary Material .02 to Rule 504; Supplementary Material .01 to Rule 2009.

[7] *See* Supplementary Material .12 to Rule 504; Supplementary Material .05 to Rule 2009. Specifically, the Exchange may list short term options in $0.50 intervals for strike prices less than $75, or for option classes that trade in one dollar increments in the related non-short term option, $1 intervals for strike prices that are between $75 and $150, and $2.50 intervals for strike prices above $150. *See id.*

[8] *See* Rule 504(d). In general, the Exchange must list standard expiration contracts in $2.50 intervals for strike prices of $25 or less, $5 intervals for strike prices greater than $25, and $10 intervals for strike prices greater than $200. *See id.*

[9] *See* Supplementary Material .02(e) to Rule 504; Supplementary Material .01(e) to Rule 2009.

[10] *See* Notice, *supra* note 5, at 27007.

[11] For example, since the April 2014 monthly option expired on Saturday, April 19, the proposed rule change would allow the Exchange to list the May 2014 monthly option in short term option intervals starting Monday, April 21. *See* Notice, *supra* note 5, at 27007.

[12] *See* Securities Exchange Act Release No. 71033 (December 11, 2013), 78 FR 76375 (December 17, 2013) (SR–ISE–2013–68).

[13] *See* Notice, *supra* note 5, at 27007.

[14] *See* Notice, *supra* note 5, at 27008.

[15] *Id.*

[16] *Id.*

[17] In approving the proposed rule change, the Commission has considered its impact on efficiency, competition, and capital formation. *See* 15 U.S.C. 78c(f).

rule change is consistent with Section 6(b)(5) of the Act,[18] which requires, among other things, that the rules of a national securities exchange be designed to promote just and equitable principles of trade, to prevent fraudulent and manipulative acts, to remove impediments to and perfect the mechanism of a free and open market and a national market system, and, in general, to protect investors and the public interest.

The Commission believes that the proposed change may provide the investing public and other market participants more flexibility to closely tailor their investment and hedging decisions, thus allowing them to better manage their risk exposure. As the Exchange notes, standard expiration contracts currently trade in wider strike price intervals than their weekly counterparts, except during the week prior to expiration.[19] The Exchange further states that this creates a situation where contracts on the same option class that expire both several weeks before and several weeks after the standard expiration are eligible to trade in strike price intervals that the standard expiration contract is not.[20] According to the Exchange, the proposed rule change will increase market efficiency by harmonizing strike price intervals for contracts that are close to expiration, whether those contracts are listed pursuant to weekly or monthly expiration cycles.[21]

The Commission believes that the proposed rule change to remove obsolete rule next concerning the listing of new short term option during the week of expiration is consistent with the Act because it protects investors and the public interest by eliminating any confusion about the opening of additional series during the week of expiration.

Finally, in approving this proposal, the Commission notes that the Exchange has represented that it and OPRA have the necessary systems capacity to handle the potential additional traffic associated with this proposed rule change.[22] The Exchange further stated that it believes its members will not have a capacity issue as a result of the proposal and that it does not believe this expansion will cause fragmentation of liquidity. [23]

[18] 15 U.S.C. 78f(b)(5).

[19] *See* Notice, *supra* note 5, at 27007.

[20] *See* Notice, *supra* note 5, at 27007–8.

[21] *See* Notice, *supra* note 5, at 27008.

[22] *Id.*

[23] *Id.*

IV. Conclusion

It is therefore ordered, pursuant to Section 19(b)(2) of the Act [24] that the proposed rule change (SR–ISE–2014–23), as modified by Amendment No. 2, be, and hereby is, approved.

For the Commission, by the Division of Trading and Markets, pursuant to delegated authority.[25]

Kevin M. O'Neill,

Deputy Secretary.

[FR Doc. 2014–15199 Filed 6–27–14; 8:45 am]

BILLING CODE 8011–01–P

[24] 15 U.S.C. 78f(b)(2).

[25] 17 CFR 200.30–3(a)(12).

SECURITIES AND EXCHANGE COMMISSION

[Release No. 34–72458; File No. SR–NYSEArca–2014–56]

Self-Regulatory Organizations; NYSE Arca, Inc.; Notice of Designation of a Longer Period for Commission Action on Proposed Rule Change Relating to the Listing and Trading of Shares of the PIMCO Income Exchange-Traded Fund Under NYSE Arca Equities Rule 8.600

June 24, 2014.

On May 1, 2014, NYSE Arca, Inc. filed with the Securities and Exchange Commission (''Commission''), pursuant to Section 19(b)(1) of the Securities Exchange Act of 1934 (''Act'') [1] and Rule 19b–4 thereunder,[2] a proposed rule change relating to the listing and trading of shares of the PIMCO Income Exchange-Traded Fund. The proposed rule change was published for comment in the **Federal Register** on May 21, 2014.[3] The Commission received no comment letters on the proposed rule change.

Section 19(b)(2) of the Act [4] provides that, within 45 days of the publication of notice of the filing of a proposed rule change, or within such longer period up to 90 days as the Commission may designate if it finds such longer period to be appropriate and publishes its reasons for so finding or as to which the self-regulatory organization consents, the Commission shall either approve the proposed rule change, disapprove the proposed rule change, or institute proceedings to determine whether the proposed rule change should be disapproved. The Commission is extending this 45-day time period. The Commission finds that it is appropriate to designate a longer period within which to take action on the proposed rule change so that it has sufficient time to consider the proposed rule change.

Accordingly, the Commission, pursuant to Section 19(b)(2) of the Act,[5] designates August 19, 2014, as the date by which the Commission should either approve or disapprove or institute proceedings to determine whether to disapprove the proposed rule change (File Number SR–NYSEArca–2014–56).

For the Commission, by the Division of Trading and Markets, pursuant to delegated authority.[6]

Kevin M. O'Neill,

Deputy Secretary.

[FR Doc. 2014–15206 Filed 6–27–14; 8:45 am]

BILLING CODE 8011–01–P

[1] 15 U.S.C. 78s(b)(1).

[2] 17 CFR 240.19b–4.

[3] *See* Securities Exchange Act Release No. 72170 (May 15, 2014), 79 FR 29231.

[4] 15 U.S.C. 78s(b)(2).

[5] *Id.*

[6] 17 CFR 200.30–3(a)(31).

SECURITIES AND EXCHANGE COMMISSION

[Release No. 34–72455; File No. SR–ISE–2014–09]

Self-Regulatory Organizations; International Securities Exchange, LLC; Order Instituting Proceedings to Determine Whether to Approve or Disapprove Proposed Rule Change Relating to Market Maker Risk Parameters

June 24, 2014.

I. Introduction

On March 10, 2014, the International Securities Exchange, LLC (''Exchange'' or ''ISE'') filed with the Securities and Exchange Commission (''Commission''), pursuant to Section 19(b)(1) of the Securities Exchange Act of 1934 (''Act'') [1] and Rule 19b–4 thereunder,[2] a proposed rule change to amend ISE Rules 722 and 804 to mitigate market maker risk by adopting an Exchange-provided risk management functionality. The proposed rule change was published for comment in the **Federal Register** on March 26, 2014.[3] The Commission received no comments on the proposal. On May 7, 2014, pursuant to Section 19(b)(2) of the Act,[4] the Commission designated a longer period within which to either approve the proposed rule change, disapprove the proposed rule change, or institute proceedings to determine whether to

disapprove the proposed rule change.[5] This order institutes proceedings under Section 19(b)(2)(B) of the Act[6] to determine whether to approve or disapprove the proposed rule change.[7]

II. Description of the Proposal

As described in the Notice, the Exchange proposes to amend ISE Rules 722 and 804 to mitigate market maker risk by adopting an Exchange-provided risk management functionality. Currently, pursuant to ISE Rules 722 and 804, the Exchange automatically removes a market maker's quotes in all series of an options class when certain parameter settings are triggered. Specifically, there are four parameters that can be set by market makers on a class-by-class basis and are available for market maker quotes in single options series and in complex instruments on the complex order book. Pursuant to the rules, market makers establish a time frame during which the system calculates: (1) The number of contracts executed by the market maker in an options class; (2) the percentage of the total size of the market maker's quotes in the class that has been executed; (3) the absolute value of the net between contracts bought and contracts sold in an options class; and (4) the absolute value of the net between (a) calls purchased plus puts sold and (b) calls sold plus puts purchased. The market maker establishes limits for each of these four parameters, and when the limits are exceeded within the prescribed time frame, the market maker's quotes in that class are removed or curtailed.[8] Separately, the Exchange recently adopted another risk management parameter that permits market maker quotes in all classes to be automatically removed from the trading system if a specified number of curtailment events are exceeded within the prescribed time period across the ISE market.[9] It is mandatory for market makers to enter values into all of the quotation risk management parameters for all options classes in which it enters quotes.

In the Notice, the Exchange proposes to further enhance its risk management offering by implementing an additional functionality that would permit market maker quotes to be automatically removed from the trading system if a specified number of curtailment events occur across ISE and its affiliated exchange, ISE Gemini. According to the Exchange, a single trading system governs the trading activity on both ISE and ISE Gemini.[10]

As proposed, market makers who choose to use this functionality would be able to set market wide parameters to govern its trading activity across both ISE and ISE Gemini. Once the parameter is set, the trading system would count the number of times a market maker's pre-set curtailment event occurs on each exchange, as specified in ISE Rule 804(g) (for regular orders) and ISE Rule 722, Supplementary Material .04 (for complex orders) and aggregate them. Once the specified number of curtailment events across both markets has been reached, the trading system would automatically remove all of the market maker's quotes in all classes on both ISE and ISE Gemini. The Exchange believes this functionality would reduce market maker risk in the event the market maker suffers from a systems issue or the occurrence of an unusual or unexpected market activity. As proposed, any quotes sent by the market maker after the market-wide parameter across both markets has been triggered would be rejected until the market maker notifies each exchange—in a non-automated manner, such as email or telephone—that it is ready to come out of its curtailment. Once notified by the market maker, the market operations staff for each exchange would reactivate the market maker's quotes and the market maker would again be active in on both ISE and ISE Gemini.[11]

According to the Exchange, the proposed risk management functionality would operate consistently with the firm quote obligations of a broker-dealer pursuant to Rule 602 of Regulation NMS. The Exchange anticipates that any marketable orders or executable quotes received before the proposed functionality is triggered would automatically execute at the price up to the market maker's size, regardless of whether such execution would result in executions in excess of the market maker's pre-set parameters. Further, the Exchange states that the proposed cross-exchange market wide parameter will not be mandatory and that market makers who prefer to use their own risk management systems can set the Exchange parameters to not be triggered.

III. Proceedings to Determine Whether to Approve or Disapprove SR–ISE–2014–09 and Grounds for Disapproval Under Consideration

The Commission is instituting proceedings pursuant to Section 19(b)(2)(B) of the Act[12] to determine whether the proposed rule change should be approved or disapproved. Institution of such proceedings is appropriate at this time in view of the legal and policy issues raised by the proposed rule change, as discussed below. Institution of proceedings does not indicate that the Commission has reached any conclusions with respect to any of the issues involved. Rather, as described below, the Commission seeks and encourages interested persons to provide additional comment on the proposed rule change.

As discussed above, the Exchange proposes to amend ISE Rules 722 and 804, which would expand the current risk management offerings by ISE and provide for cross-exchange risk management functionality. The Commission believes that the proposal, which seeks to allow removal of a market maker's quotes in all classes on both ISE and ISE Gemini once an aggregated pre-set number of curtailment events on both exchanges is reached, raises important issues that warrant further public comment and Commission consideration. Namely, the Commission believes that proceedings are appropriate to consider, among other matters, whether the proposal is unfairly discriminatory to any member of the Exchange and the impact of the proposal on competition among exchanges.

Pursuant to Section 19(b)(2)(B) of the Act,[13] the Commission is providing notice of the grounds for disapproval under consideration. The Commission is instituting proceedings to allow for additional analysis of the proposed rule change's consistency with Section 6(b)(5) of the Act, which requires, among other things, that the rules of a national securities exchange be

[5] *See* Securities Exchange Act Release No. 72117 (May 7, 2014), 79 FR 27360 (May 13, 2014). The Commission determined that it was appropriate to designate a longer period within which to take action on the proposed rule change so that it has sufficient time to consider the proposed rule change. Accordingly, the Commission designated June 24, 2014 as the date by which it should approve, disapprove, or institute proceedings to determine whether to disapprove the proposed rule change.

[6] 15 U.S.C. 78s(b)(2)(B).

[7] Relatedly, the Commission is also instituting proceedings under Section 19(b)(2)(B) of the Act to determine whether to approve or disapprove a proposed rule change filed by ISE's affiliated exchange, ISE Gemini, LLC (''ISE Gemini''), that mirrors the rule change proposed by ISE. *See* Securities Exchange Act Release No. 34–72454 (June 24, 2014).

[8] *See* Securities Exchange Act Release No. 70132 (August 7, 2013), 78 FR 49311 (August 13, 2013) (SR–ISE–2013–38).

[9] *See* Securities Exchange Act Release No. 71446 (January 30, 2014), 79 FR 6951 (February 5, 2014) (SR–ISE–2014–04).

[10] *See* Notice, *supra* note 3.

[11] *See* Notice, *supra* note 3 for examples illustrating how the Exchange's market wide risk management parameter would be applied under the proposal.

[12] 15 U.S.C. 78s(b)(2)(B).

[13] *Id.*

''designed to prevent fraudulent and manipulative acts and practices, to promote just and equitable principles of trade, to perfect the mechanism of a free and open market and a national market systems; and not be designed to permit unfair discrimination between customers, issuers, brokers, or dealers.'' [14] The Commission is also instituting proceedings to allow for additional analysis of the proposed rule change's consistency with Section 6(b)(8) of the Act, which requires that rules of a national securities exchange ''do not impose any burden on competition not necessary or appropriate in furtherance of the purposes of'' the Act.

IV. Procedure: Request for Written Comments

The Commission requests that interested persons provide written submissions of their views, data, and arguments with respect to the concerns identified above, as well as any other concerns they may have with the proposal. In particular, the Commission invites the written views of interested persons concerning whether the proposal is consistent with Sections 6(b)(5) and 6(b)(8) or any other provision of the Act, or the rules and regulations thereunder. Although there do not appear to be any issues relevant to approval or disapproval which would be facilitated by an oral presentation of views, data, and arguments, the Commission will consider, pursuant to Rule 19b–4, any request for an opportunity to make an oral presentation.[15]

Interested persons are invited to submit written data, views, and arguments regarding whether the proposal should be approved or disapproved by July 21, 2014. Any person who wishes to file a rebuttal to any other person's submission must file that rebuttal by August 4, 2014.

Comments may be submitted by any of the following methods:

Electronic Comments

- Use the Commission's Internet comment form (*http://www.sec.gov/rules/sro.shtml*); or
- Send an email to *rule-comments@sec.gov.* Please include File Number SR–ISE–2014–09 on the subject line.

Paper Comments

- Send paper comments in triplicate to Secretary, Securities and Exchange Commission, 100 F Street NE., Washington, DC 20549–1090.

All submissions should refer to File Number SR–ISE–2014–09. This file number should be included on the subject line if email is used. To help the Commission process and review your comments more efficiently, please use only one method. The Commission will post all comments on the Commission's Internet Web site (*http://www.sec.gov/rules/sro.shtml*). Copies of the submission, all subsequent amendments, all written statements with respect to the proposed rule change that are filed with the Commission, and all written communications relating to the proposed rule change between the Commission and any person, other than those that may be withheld from the public in accordance with the provisions of 5 U.S.C. 552, will be available for Web site viewing and printing in the Commission's Public Reference Room, 100 F Street NE., Washington, DC 20549, on official business days between the hours of 10:00 a.m. and 3:00 p.m. Copies of such filings also will be available for inspection and copying at the principal office of the Exchange. All comments received will be posted without change; the Commission does not edit personal identifying information from submissions. You should submit only information that you wish to make available publicly. All submissions should refer to File Number SR–ISE–2014–09 and should be submitted on or before July 21, 2014. Rebuttal comments should be submitted by August 4, 2014.

For the Commission, by the Division of Trading and Markets, pursuant to delegated authority.[16]

Kevin M. O'Neill,

Deputy Secretary.

[FR Doc. 2014–15202 Filed 6–27–14; 8:45 am]

BILLING CODE 8011–01–P

[14] 15 U.S.C. 78f(b)(5).

[15] Section 19(b)(2) of the Act, as amended by the Securities Act Amendments of 1975, Public Law 94–29 (June 4, 1975), grants the Commission flexibility to determine what type of proceeding—either oral or notice and opportunity for written comments—is appropriate for consideration of a particular proposal by a self-regulatory organization. *See* Securities Act Amendments of 1975, Senate Comm. on Banking, Housing & Urban Affairs, S. Rep. No. 75, 94th Cong., 1st Sess. 30 (1975).

[16] 17 CFR 200.30–3(a)(57).

SECURITIES AND EXCHANGE COMMISSION

[Release No. 34–72453; File No. SR–NYSEArca–2014–68]

Self-Regulatory Organizations; NYSE Arca, Inc.; Notice of Filing and Immediate Effectiveness of Proposed Rule Change To Reflect Changes to the Name of, and the Means of Seeking the Investment Objective Applicable to, the PIMCO Real Return Exchange-Traded Fund

June 24, 2014.

Pursuant to Section 19(b)(1) [1] of the Securities Exchange Act of 1934 (''Act'') [2] and Rule 19b–4 thereunder,[3] notice is hereby given that, on June 12, 2014, NYSE Arca, Inc. (''Exchange'' or ''NYSE Arca'') filed with the Securities and Exchange Commission (''Commission'') the proposed rule change as described in Items I and II below, which Items have been prepared by the self-regulatory organization. The Commission is publishing this notice to solicit comments on the proposed rule change from interested persons.

I. Self-Regulatory Organization's Statement of the Terms of Substance of the Proposed Rule Change

The Exchange proposes to reflect changes to the name of, and the means of seeking the investment objective applicable to, the PIMCO Real Return Exchange-Traded Fund (the ''Fund''). The Commission has approved the listing and trading of shares of the Fund on the Exchange under NYSE Arca Equities Rule 8.600. Shares of the Fund have not yet commenced trading on the Exchange. The text of the proposed rule change is available on the Exchange's Web site at *www.nyse.com,* at the principal office of the Exchange, and at the Commission's Public Reference Room.

II. Self-Regulatory Organization's Statement of the Purpose of, and Statutory Basis for, the Proposed Rule Change

In its filing with the Commission, the self-regulatory organization included statements concerning the purpose of, and basis for, the proposed rule change and discussed any comments it received on the proposed rule change. The text of those statements may be examined at the places specified in Item IV below. The Exchange has prepared summaries, set forth in sections A, B, and C below,

[1] 15 U.S.C. 78s(b)(1).

[2] 15 U.S.C. 78a.

[3] 17 CFR 240.19b–4.

of the most significant parts of such statements.

A. Self-Regulatory Organization's Statement of the Purpose of, and the Statutory Basis for, the Proposed Rule Change

1. Purpose

The Commission has approved listing and trading on the Exchange of shares (''Shares'') of the PIMCO Real Return Exchange-Traded Fund (''Fund''), which are offered by PIMCO ETF Trust (the ''Trust''),[4] under NYSE Arca Equities Rule 8.600, which governs the listing and trading of Managed Fund Shares. The Shares of the Fund have not yet commenced trading on the Exchange.

The Shares are offered by the Trust, a statutory trust organized under the laws of the State of Delaware and registered with the Commission as an open-end management investment company.[5] The investment manager to the Fund is Pacific Investment Management Company LLC (''PIMCO'' or the ''Adviser'').

In this proposed rule change, the Exchange proposes to reflect changes to the name of the Fund and to the description of the investments the Adviser will utilize in seeking the Fund's investment objective, as described below.[6]

The Adviser proposes that the name of the Fund be changed from that stated in the Prior Release to the PIMCO Inflation-Linked Active Exchange-Traded Fund. The Adviser represents that it is changing the name of the Fund to better reflect the nature of the Fund's revised investment strategy.

In addition, the Adviser proposes that the Fund may invest up to 20% of its total assets in securities and instruments that are economically tied to emerging market countries, subject to the Fund's investment limitations relating to particular asset classes set forth in the Prior Release.[7] The Prior Release stated that the Fund may invest up to 10% of its total assets in securities and instruments that are economically tied to emerging market countries, subject to the Fund's investment limitations relating to particular asset classes set forth in the Prior Release.[8] The Adviser represents that the proposed increase in the Fund's total assets that may be invested in securities and instruments that are economically tied to emerging market countries will afford the Fund the opportunity to invest in a broader range of financial instruments related to emerging markets and, therefore, may facilitate the Fund's meeting its investment objective.[9] The Commission previously has approved listing and trading on the Exchange of shares of actively-managed exchange-traded funds under NYSE Arca Equities Rule 8.600 that may invest up to 20% of the applicable fund's total assets in emerging market debt securities.[10]

Finally, the Prior Release stated the effective duration of the Fund normally will vary within three years (plus or minus) of the effective portfolio duration of the securities comprising the Barclays Capital U.S. TIPS Index, as calculated by PIMCO, which as of January 31, 2013, as converted, was 6.16 years.[11] The Adviser proposes to change this representation to provide that the effective duration of the Fund normally will vary within three years (plus or minus) of the effective portfolio duration, as calculated by PIMCO, of the securities comprising the BofAMerrill 1-Year Constant Maturity US TIPS Index (''Index''). The effective portfolio duration of the securities comprising the Index, as calculated by PIMCO, was approximately 0.95 years as of April 30, 2014. The effective duration of the Index will be calculated using the same conversion factors as the Fund. The Adviser represents that it wishes to reduce the interest rate sensitivity of the Fund's investments.

The Adviser represents that there is no change to the Fund's investment objective.

The Fund will comply with all initial and continued listing requirements under NYSE Arca Equities Rule 8.600.

Except for the changes noted above, all other facts presented and representations made in the Prior Release remain unchanged.

All terms referenced but not defined herein are defined in the Prior Release.

2. Statutory Basis

The basis under the Act for this proposed rule change is the requirement under Section 6(b)(5)[12] that an exchange have rules that are designed to prevent fraudulent and manipulative acts and practices, to promote just and equitable principles of trade, to remove impediments to, and perfect the mechanism of a free and open market and, in general, to protect investors and the public interest.

The proposed rule change is designed to promote just and equitable principles of trade and to protect investors and the public interest in that the Adviser represents that there is no change to the Fund's investment objective. The Fund will comply with all initial and continued listing requirements under NYSE Arca Equities Rule 8.600. The Adviser represents that the proposed increase from up to 10% to up to 20% of its total assets in securities and

[4] *See* Securities Exchange Act Release No. 71125 (December 18, 2013), 78 FR 77743 (December 24, 2013) (SR–NYSEArca–2013–106) (order approving listing and trading on the Exchange of the PIMCO Diversified Income Exchange-Traded Fund, PIMCO Real Return Exchange-Traded Fund, and PIMCO Low Duration Exchange-Traded Fund) (''Prior Order''). *See also* Securities Exchange Act Release No. 70774 (October 30, 2013), 78 FR 66396 (November 5, 2013) (SR–NYSEArca–2013–106) (''Prior Notice,'' and together with the Prior Order, the ''Prior Release'').

[5] The Trust is registered under the Investment Company Act of 1940 (15 U.S.C. 80a–1) (''1940 Act''). On October 31, 2013, the Trust filed with the Commission an amendment to its registration statement on Form N–1A under the Securities Act of 1933 (15 U.S.C. 77a) (''Securities Act''), and under the 1940 Act relating to the Fund (File Nos. 333–155395 and 811–22250) (''Registration Statement''). The description of the operation of the Trust and the Fund herein is based, in part, on the Registration Statement. In addition, the Commission has issued an order granting certain exemptive relief to the Trust under the 1940 Act. *See* Investment Company Act Release No. 28993 (File No. 812–13571) (''Exemptive Order'').

[6] The changes described herein will be effective upon filing with the Commission of a supplement to the Trust's Registration Statement. *See* note 5, *supra.*

[7] As stated in the Prior Release, according to the Registration Statement, PIMCO will have broad discretion to identify countries that it considers to qualify as emerging markets. In making investments in emerging market securities, the Fund will emphasize those countries with relatively low gross national product per capita and with the potential for rapid economic growth. Emerging market countries are generally located in Asia, Africa, the Middle East, Latin America and Eastern Europe. PIMCO will select the country and currency composition based on its evaluation of relative interest rates, inflation rates, exchange rates, monetary and fiscal policies, trade and current account balances, legal and political developments and any other specific factors it believes to be relevant. While emerging markets corporate debt securities (excluding commercial paper) generally must have $200 million or more par amount outstanding and significant par value traded to be considered as an eligible investment for the Fund, at least 80% of issues of such securities held by the Fund must have $200 million or more par amount outstanding at the time of investment.

[8] *See* note 4, *supra.*

[9] According to the Registration Statement, the Fund's investment objective will be to seek maximum real return, consistent with preservation of capital and prudent investment management.

[10] *See, e.g.,* Securities Exchange Act Release Nos. 69061 (March 7, 2013), 78 FR 15990 (March 13, 2013) (SR–NYSEArca–2013–01) (order approving listing and trading on the Exchange of Shares of the Newfleet Multi-Sector Income Fund under NYSE Arca Equities Rule 8.600); 68863 (February 7, 2013), 78 FR 10222 (February 13, 2013) (SR–NYSEArca–2012–142) (order approving listing and trading on the Exchange of Shares of the Guggenheim Enhanced Total Return ETF under NYSE Arca Equities Rule 8.600).

[11] The Prior Release stated that, according to the Registration Statement, effective duration takes into account that for certain bonds expected cash flows will fluctuate as interest rates change and is defined in nominal yield terms, which is market convention for most bond investors and managers. The Prior Release stated that the effective duration of the Barclays Capital U.S. TIPS Index will be calculated using the same conversion factors as the Fund.

[12] 15 U.S.C. 78f(b)(5).

instruments that are economically tied to emerging market countries (subject to the Fund's investment limitations relating to particular asset classes set forth in the Prior Release) will afford the Fund the opportunity to invest in a broader range of financial instruments related to emerging markets and, therefore, may facilitate the Fund's meeting its investment objective. The Adviser further represents that the proposed change to the index used by the Fund as a measure of duration is appropriate in that the Adviser wishes to reduce the interest rate sensitivity of the Fund's investments in seeking the Fund's investment objective.[13] The effective duration of the Index will be calculated using the same conversion factors as the Fund. As a result of this change, the Adviser represents that it wishes to reduce the interest rate sensitivity of the Fund's investments.

The proposed rule change is designed to perfect the mechanism of a free and open market and, in general, to protect investors and the public interest in that the Fund will comply with all initial and continued listing requirements under NYSE Arca Equities Rule 8.600. In addition, the Adviser represents that it is changing the name of the Fund to better reflect the nature of the Fund's revised investment strategy. The Adviser represents that the proposed increase in the Fund's total assets that may be invested in securities and instruments that are economically tied to emerging market countries will afford the Fund the opportunity to invest in a broader range of financial instruments related to emerging markets and, therefore, may facilitate the Fund's meeting its investment objective. The Adviser represents that the change to the index used by the Fund as a measure of duration should result in overall Fund investments that are less sensitive to changes in interest rates. The Adviser represents that there is no change to the Fund's investment objective. Except for the changes noted above, all other representations made in the Prior Release remain unchanged.

B. Self-Regulatory Organization's Statement on Burden on Competition

The Exchange does not believe that the proposed rule change will impose any burden on competition that is not necessary or appropriate in furtherance of the purposes of the Act. The proposed increase from up to 10% to up to 20% of the Fund's total assets that may be invested in securities and instruments that are economically tied to emerging market countries will permit the Fund to invest in instruments that are economically tied to emerging market countries up to a level consistent with certain other actively-managed exchange-traded funds[14] and will enhance competition among issues of Managed Fund Shares that invest in fixed income securities.

C. Self-Regulatory Organization's Statement on Comments on the Proposed Rule Change Received From Members, Participants, or Others

No written comments were solicited or received with respect to the proposed rule change.

III. Date of Effectiveness of the Proposed Rule Change and Timing for Commission Action

Because the foregoing proposed rule change does not: (i) significantly affect the protection of investors or the public interest; (ii) impose any significant burden on competition; and (iii) become operative for 30 days from the date on which it was filed, or such shorter time as the Commission may designate, if consistent with the protection of investors and the public interest, the proposed rule change has become effective pursuant to Section 19(b)(3)(A) of the Act[15] and Rule 19b–4(f)(6)(iii) thereunder.[16]

At any time within 60 days of the filing of the proposed rule change, the Commission summarily may temporarily suspend such rule change if it appears to the Commission that such action is necessary or appropriate in the public interest, for the protection of investors, or otherwise in furtherance of the purposes of the Act.

IV. Solicitation of Comments

Interested persons are invited to submit written data, views, and arguments concerning the foregoing, including whether the proposed rule change is consistent with the Act. Comments may be submitted by any of the following methods:

Electronic Comments

- Use the Commission's Internet comment form (*http://www.sec.gov/rules/sro.shtml*); or
- Send an email to *rule-comments@sec.gov.* Please include File Number SR–NYSEArca-2014–68 on the subject line.

Paper Comments

- Send paper comments in triplicate to Secretary, Securities and Exchange Commission, 100 F Street NE., Washington, DC 20549–1090.

All submissions should refer to File Number SR–NYSEArca-2014–68. This file number should be included on the subject line if email is used. To help the Commission process and review your comments more efficiently, please use only one method. The Commission will post all comments on the Commission's Internet Web site (*http://www.sec.gov/rules/sro.shtml*). Copies of the submission, all subsequent amendments, all written statements with respect to the proposed rule change that are filed with the Commission, and all written communications relating to the proposed rule change between the Commission and any person, other than those that may be withheld from the public in accordance with the provisions of 5 U.S.C. 552, will be available for Web site viewing and printing in the Commission's Public Reference Room, 100 F Street NE., Washington, DC 20549, on official business days between the hours of 10:00 a.m. and 3:00 p.m. Copies of such filing will also be available for inspection and copying at the principal office of the Exchange. All comments received will be posted without change; the Commission does not edit personal identifying information from submissions. You should submit only information that you wish to make available publicly. All submissions should refer to File Number SR–NYSEArca-2014–68 and should be submitted on or before July 21, 2014.

For the Commission, by the Division of Trading and Markets, pursuant to delegated authority.[17]

Kevin M. O'Neill,

Deputy Secretary.

[FR Doc. 2014–15200 Filed 6–27–14; 8:45 am]

BILLING CODE 8011–01–P

[13] Duration is a measure used to determine the sensitivity of a security's price to changes in interest rates. The longer a security's duration, the more sensitive it will be to interest rates.

[14] *See* note 10, *supra.*

[15] 15 U.S.C. 78s(b)(3)(A).

[16] 17 CFR 240.19b–4(f)(6). In addition, Rule 19b–4(f)(6) requires a self-regulatory organization to give the Commission written notice of its intent to file the proposed rule change at least five business days prior to the date of filing of the proposed rule change, or such shorter time as designated by the Commission. The Exchange has satisfied this requirement.

[17] 17 CFR 200.30–3(a)(12).

SECURITIES AND EXCHANGE COMMISSION

[Release No. 34–72454; File No. SR–ISEGemini–2014–09]

Self-Regulatory Organizations; ISE Gemini, LLC; Order Instituting Proceedings To Determine Whether To Approve or Disapprove Proposed Rule Change Relating to Market Maker Risk Parameters

June 24, 2014.

I. Introduction

On March 10, 2014, the ISE Gemini, LLC (''Exchange'' or ''ISE Gemini'') filed with the Securities and Exchange Commission (''Commission''), pursuant to Section 19(b)(1) of the Securities Exchange Act of 1934 (''Act'') [1] and Rule 19b–4 thereunder,[2] a proposed rule change to amend ISE Gemini Rule 804 to mitigate market maker risk by adopting an Exchange-provided risk management functionality. The proposed rule change was published for comment in the **Federal Register** on March 26, 2014.[3] The Commission received no comments on the proposal. On May 7, 2014, pursuant to Section 19(b)(2) of the Act,[4] the Commission designated a longer period within which to either approve the proposed rule change, disapprove the proposed rule change, or institute proceedings to determine whether to disapprove the proposed rule change.[5] This order institutes proceedings under Section 19(b)(2)(B) of the Act [6] to determine whether to approve or disapprove the proposed rule change.[7]

II. Description of the Proposal

As described in the Notice, the Exchange proposes to amend ISE Gemini Rule 804 to mitigate market maker risk by adopting an Exchange-provided risk management functionality. Currently, pursuant to ISE Gemini Rule 804, the Exchange automatically removes a market maker's quotes in all series of an options class when certain parameter settings are triggered. Specifically, there are four parameters that can be set by market makers on a class-by-class basis and are available for market maker quotes in single options series and in complex instruments on the complex order book. Pursuant to the rules, market makers establish a time frame during which the system calculates: (1) The number of contracts executed by the market maker in an options class; (2) the percentage of the total size of the market maker's quotes in the class that has been executed; (3) the absolute value of the net between contracts bought and contracts sold in an options class; and (4) the absolute value of the net between (a) calls purchased plus puts sold and (b) calls sold plus puts purchased. The market maker establishes limits for each of these four parameters, and when the limits are exceeded within the prescribed time frame, the market maker's quotes in that class are removed or curtailed.[8] Separately, the Exchange recently adopted another risk management parameter that permits market maker quotes in all classes to be automatically removed from the trading system if a specified number of curtailment events are exceeded within the prescribed time period across the ISE Gemini market.[9] It is mandatory for market makers to enter values into all of the quotation risk management parameters for all options classes in which it enters quotes.

In the Notice, the Exchange proposes to further enhance its risk management offering by implementing an additional functionality that would permit market maker quotes to be automatically removed from the trading system if a specified number of curtailment events occur across ISE Gemini and its affiliated exchange, ISE. According to the Exchange, a single trading system governs the trading activity on both ISE Gemini and ISE.[10]

As proposed, market makers who choose to use this functionality would be able to set market wide parameters to govern its trading activity across both ISE Gemini and ISE. Once the parameter is set, the trading system would count the number of times a market maker's pre-set curtailment event occurs on each exchange, as specified in ISE Gemini Rule 804(g), and aggregate them. Once the specified number of curtailment events across both markets has been reached, the trading system would automatically remove all of the market maker's quotes in all classes on both ISE Gemini and ISE. The Exchange believes this functionality would reduce market maker risk in the event the market maker suffers from a systems issue or the occurrence of an unusual or unexpected market activity. As proposed, any quotes sent by the market maker after the market-wide parameter across both markets has been triggered would be rejected until the market maker notifies each exchange—in a non-automated manner, such as email or telephone—that it is ready to come out of its curtailment. Once notified by the market maker, the market operations staff for each exchange would reactivate the market maker's quotes and the market maker would again be active in on both ISE Gemini and ISE.[11]

According to the Exchange, the proposed risk management functionality would operate consistently with the firm quote obligations of a broker-dealer pursuant to Rule 602 of Regulation NMS. The Exchange anticipates that any marketable orders or executable quotes received before the proposed functionality is triggered would automatically execute at the price up to the market maker's size, regardless of whether such execution would result in executions in excess of the market maker's pre-set parameters. Further, the Exchange states that the proposed cross-exchange market wide parameter will not be mandatory and that market makers who prefer to use their own risk management systems can set the Exchange parameters to not be triggered.

III. Proceedings To Determine Whether To Approve or Disapprove SR–ISEGemini-2014–09 and Grounds for Disapproval Under Consideration

The Commission is instituting proceedings pursuant to Section 19(b)(2)(B) of the Act [12] to determine whether the proposed rule change should be approved or disapproved. Institution of such proceedings is appropriate at this time in view of the legal and policy issues raised by the proposed rule change, as discussed below. Institution of proceedings does not indicate that the Commission has

[1] 15 U.S.C. 78s(b)(1).

[2] 17 CFR 240.19b–4.

[3] *See* Securities Exchange Act Release No. 71758 (Mar. 20, 2014), 79 FR 16846 (''Notice'').

[4] 15 U.S.C. 78s(b)(2).

[5] *See* Securities Exchange Act Release No. 72118 (May 7, 2014), 79 FR 27355 (May 13, 2014). The Commission determined that it was appropriate to designate a longer period within which to take action on the proposed rule change so that it has sufficient time to consider the proposed rule change. Accordingly, the Commission designated June 24, 2014 as the date by which it should approve, disapprove, or institute proceedings to determine whether to disapprove the proposed rule change.

[6] 15 U.S.C. 78s(b)(2)(B).

[7] Relatedly, the Commission is also instituting proceedings under Section 19(b)(2)(B) of the Act to determine whether to approve or disapprove a proposed rule change filed by ISE Gemini's affiliated exchange, International Securities Exchange, LLC (''ISE''), that mirrors the rule change proposed by ISE Gemini. *See* Securities Exchange Act Release No. 34–72455 (June 24, 2014).

[8] *See* Securities Exchange Act Release No. 70644 (October 9, 2013), 78 FR 62785 (October 22, 2013) (SR–Topaz–2013–06).

[9] *See* Securities Exchange Act Release No. 71447 (January 30, 2014), 79 FR 6956 (February 5, 2014) (SR–Topaz–2014–04).

[10] *See* Notice, *supra* note 3.

[11] *See* Notice, *supra* note 3 for examples illustrating how the Exchange's market wide risk management parameter would be applied under the proposal.

[12] 15 U.S.C. 78s(b)(2)(B).

reached any conclusions with respect to any of the issues involved. Rather, as described below, the Commission seeks and encourages interested persons to provide additional comment on the proposed rule change.

As discussed above, the Exchange proposes to amend ISE Gemini Rule 804, which would expand the current risk management offerings by ISE Gemini and provide for cross-exchange risk management functionality. The Commission believes that the proposal, which seeks to allow removal of a market maker's quotes in all classes on both ISE Gemini and ISE once an aggregated pre-set number of curtailment events on both exchanges is reached, raises important issues that warrant further public comment and Commission consideration. Namely, the Commission believes that proceedings are appropriate to consider, among other matters, whether the proposal is unfairly discriminatory to any member of the Exchange and the impact of the proposal on competition among exchanges.

Pursuant to Section 19(b)(2)(B) of the Act,[13] the Commission is providing notice of the grounds for disapproval under consideration. The Commission is instituting proceedings to allow for additional analysis of the proposed rule change's consistency with Section 6(b)(5) of the Act, which requires, among other things, that the rules of a national securities exchange be ''designed to prevent fraudulent and manipulative acts and practices, to promote just and equitable principles of trade, to perfect the mechanism of a free and open market and a national market systems; and not be designed to permit unfair discrimination between customers, issuers, brokers, or dealers.'' [14] The Commission is also instituting proceedings to allow for additional analysis of the proposed rule change's consistency with Section 6(b)(8) of the Act, which requires that rules of a national securities exchange ''do not impose any burden on competition not necessary or appropriate in furtherance of the purposes of'' the Act.

IV. Procedure: Request for Written Comments

The Commission requests that interested persons provide written submissions of their views, data, and arguments with respect to the concerns identified above, as well as any other concerns they may have with the proposal. In particular, the Commission invites the written views of interested persons concerning whether the proposal is consistent with Sections 6(b)(5) and 6(b)(8) or any other provision of the Act, or the rules and regulations thereunder. Although there do not appear to be any issues relevant to approval or disapproval which would be facilitated by an oral presentation of views, data, and arguments, the Commission will consider, pursuant to Rule 19b-4, any request for an opportunity to make an oral presentation.[15]

Interested persons are invited to submit written data, views, and arguments regarding whether the proposal should be approved or disapproved by July 21, 2014. Any person who wishes to file a rebuttal to any other person's submission must file that rebuttal by August 4, 2014.

Comments may be submitted by any of the following methods:

Electronic Comments

- Use the Commission's Internet comment form (*http://www.sec.gov/rules/sro.shtml*); or
- Send an email to *rule-comments@sec.gov.* Please include File Number SR–ISEGemini–2014–09 on the subject line.

Paper Comments

- Send paper comments in triplicate to Secretary, Securities and Exchange Commission, 100 F Street NE., Washington, DC 20549–1090.

All submissions should refer to File Number SR–ISEGemini-2014–09. This file number should be included on the subject line if email is used. To help the Commission process and review your comments more efficiently, please use only one method. The Commission will post all comments on the Commission's Internet Web site (*http://www.sec.gov/rules/sro.shtml*). Copies of the submission, all subsequent amendments, all written statements with respect to the proposed rule change that are filed with the Commission, and all written communications relating to the proposed rule change between the Commission and any person, other than those that may be withheld from the public in accordance with the provisions of 5 U.S.C. 552, will be available for Web site viewing and printing in the Commission's Public Reference Room, 100 F Street NE., Washington, DC 20549, on official business days between the hours of 10:00 a.m. and 3:00 p.m. Copies of such filings also will be available for inspection and copying at the principal office of the Exchange. All comments received will be posted without change; the Commission does not edit personal identifying information from submissions. You should submit only information that you wish to make available publicly. All submissions should refer to File Number SR–ISEGemini–2014–09 and should be submitted on or before July 21, 2014. Rebuttal comments should be submitted by August 4, 2014.

For the Commission, by the Division of Trading and Markets, pursuant to delegated authority.[16]

Kevin M. O'Neill,

Deputy Secretary.

[FR Doc. 2014–15201 Filed 6–27–14; 8:45 am]

BILLING CODE 8011–01–P

[13] *Id.*

[14] 15 U.S.C. 78f(b)(5).

[15] Section 19(b)(2) of the Act, as amended by the Securities Act Amendments of 1975, Public Law 94–29 (June 4, 1975), grants the Commission flexibility to determine what type of proceeding—either oral or notice and opportunity for written comments—is appropriate for consideration of a particular proposal by a self-regulatory organization. *See* Securities Act Amendments of 1975, Senate Comm. on Banking, Housing & Urban Affairs, S. Rep. No. 75, 94th Cong., 1st Sess. 30 (1975).

[16] 17 CFR 200.30–3(a)(57).

SECURITIES AND EXCHANGE COMMISSION

[Release No. 34–72459; File No. SR–FINRA–2014–010]

Self-Regulatory Organizations; Financial Industry Regulatory Authority, Inc.; Notice of Withdrawal of Proposed Rule Change To Adopt FINRA Rule 2243 (Disclosure and Reporting Obligations Related to Recruitment Practices)

June 24, 2014.

On March 10, 2014, Financial Industry Regulatory Authority, Inc. (''FINRA'') filed with the Securities and Exchange Commission (''Commission''), pursuant to Section 19(b)(1) of the Securities Exchange Act of 1934 [1] and Rule 19b–4 thereunder,[2] a proposed rule change to adopt FINRA Rule 2243, which would establish disclosure and reporting obligations related to member recruitment practices. The proposed rule change was published for comment in the **Federal Register** on March 28, 2014.[3] To date, the Commission has received 189 comments on the proposal.[4]

On May 1, 2014, FINRA voluntarily extended the date for Commission

[1] 15 U.S.C. 78s(b)(1).

[2] 17 CFR 240.19b–4.

[3] *See* Securities Exchange Act Release No. 71786 (Mar. 24, 2014), 79 FR 17592 (Mar. 28, 2014).

[4] *See http://www.sec.gov/comments/sr-finra-2014–010/finra2014010.shtml.*

action on the proposed rule change to June 26, 2014. On June 20, 2014, FINRA withdrew the proposed rule change (SR–FINRA–2014–010).

For the Commission, by the Division of Trading and Markets, pursuant to delegated authority.[5]

Kevin M. O'Neill,

Deputy Secretary.

[FR Doc. 2014–15204 Filed 6–27–14; 8:45 am]

BILLING CODE 8011–01–P

SECURITIES AND EXCHANGE COMMISSION

[Release No. 34–72457; File No. SR–FICC–2014–02]

Self-Regulatory Organizations; Fixed Income Clearing Corporation; Order Approving Proposal To Extend the Pilot Program for Certain Government Securities Division Rules Relating to the GCF Repo® Service

June 24, 2014.

On May 5, 2014, the Fixed Income Clearing Corporation (''FICC'') filed with the Securities and Exchange Commission (''Commission'') proposed rule change SR–FICC–2014–02 pursuant to Section 19(b)(1) of the Securities Exchange Act of 1934 (''Act'')[1] and Rule 19b–4 thereunder.[2] The proposed rule change was published for comment in the **Federal Register** on May 23, 2014.[3] The Commission received no comments on the proposed rule change. For the reasons discussed below, the Commission is approving the proposed rule change.

I. Description of the Proposed Rule Change

FICC seeks the Commission's approval to extend the pilot program that is currently in effect for the GCF Repo® service (''2013 Pilot Program'').[4] FICC requests that the 2013 Pilot Program be extended for one year following the Commission's approval of this filing. FICC represents that, during this extension period, the final phase of tri-party reform will be implemented.[5]

A. The GCF Repo® Service

The GCF Repo® service allows dealer members of FICC's Government Services Division to trade general collateral finance repos (''GCF Repos'')[6] throughout the day without requiring intraday, trade-for-trade settlement on a delivery-versus-payment (''DVP'')[7] basis. The service allows dealers to trade GCF Repos, based on rate and term, with inter-dealer broker netting members on a blind basis. Standardized, generic CUSIP numbers have been established exclusively for GCF Repo processing, and are used to specify the type of underlying security that is eligible to serve as collateral for GCF Repos. Only Fedwire eligible, book-entry securities may serve as collateral for GCF Repos. Acceptable collateral for GCF Repos include most U.S. Treasury securities, non-mortgage-backed federal agency securities, fixed and adjustable rate mortgage-backed securities, Treasury Inflation-Protected Securities (''TIPS'') and separate trading of registered interest and principal securities (''STRIPS'').[8]

B. Background of the Pilot Program

Because FICC's GCF Repo® service operates as a tri-party mechanism, FICC was asked to alter the service to align it with the recommendations of the Tri-Party Repo Infrastructure Reform Task Force (''TPR'').[9] FICC consequently developed a pilot program (''2011 Pilot Program'') to address the TPR's recommendations,[10] and sought Commission approval to institute that program.[11] The Commission approved the 2011 Pilot Program on August 29, 2011 for a period of one year.[12] When the expiration date for the 2011 Pilot Program approached, FICC sought Commission approval to implement the 2012 Pilot Program, which continued the 2011 Pilot Program in some aspects, and modified it in others.[13] On August 8, 2012, the Commission approved the 2012 Pilot Program for a period of one year.[14]

C. The 2013 Pilot Program

The 2013 Pilot Program and its predecessor, the 2012 Pilot Program, have been the subject of a number of notices and approval orders published by the Commission.[15] These notices and orders provide extensive detail on both the GCF Repo® service and the pilot program itself. Under this proposed rule change, FICC is not proposing to alter the current pilot program in any way; rather, it proposes only to extend that program, as approved in 2012 and in 2013, for one additional year.[16]

II. Discussion

Section 19(b)(2)(C) of the Act[17] directs the Commission to approve a proposed rule change of a self-

[5] 17 CFR 200.30–3(a)(31).

[1] 15 U.S.C. 78s(b)(1).

[2] 17 CFR 240.19b–4.

[3] Securities Exchange Act Release No. 72184 (May 19, 2014), 79 FR 29828 (May 23, 2014) (SR–FICC–2014–02).

[4] *See* Securities Exchange Act Release No. 70068 (July 30, 2013), 78 FR 47453 (August 5, 2013) (SR–FICC–2013–06) (order approving the 2013 Pilot Program).

[5] The final phase of tri-party reform includes the development of an interactive messaging system to facilitate the substitution of collateral between settlement banks. FICC has represented that, if it determines to change the parameters of the GCF Repo® service during the one-year extension period, it will file a proposed rule change with the Commission. FICC has further warranted that, if it seeks to extend the 2013 Pilot Program beyond the one-year extension period or proposes to make the program permanent, it will also file a proposed rule change with the Commission.

[6] A GCF Repo is one in which the lender of funds is willing to accept any of a class of U.S. Treasuries, U.S. government agency securities, and certain mortgage-backed securities as collateral for the repurchase obligation. This is in contrast to a specific collateral repo.

[7] Delivery-versus-payment is a settlement procedure in which the buyer's cash payment for the securities it has purchased is due at the time the securities are delivered.

[8] *See* Securities Exchange Act Release No. 58696 (September 30, 2008), 73 FR 58698, 58699 (October 7, 2008) (SR–FICC–2008–04).

[9] The TPR was an industry group formed and sponsored in 2009 by the Federal Reserve Bank of New York to address weaknesses that emerged in the tri-party repo market during the financial crisis. The TPR's chief goal was to develop recommendations to address the risks presented by the reversal of tri-party repo transactions, and to develop procedures to ensure that tri-party repos would be collateralized throughout the day, rather than at the end of the day.

[10] The TPR issued preliminary and final reports setting forth its recommendations for the reform of the tri-party repo market. *See* Tri-Party Repo Infrastructure Reform Task Force Report of May 17, 2000, *available at http://www.newyorkfed.org/prc/files/report_100517.pdf; see also* Tri-Party Repo Infrastructure Reform Task Force Final Report (February 15, 2012), *available at http://www.newyorkfed.org/tripartyrepo/pdf/report_120215.pdf.*

[11] Securities Exchange Act Release No. 64955 (July 25, 2011), 76 FR 45638 (July 29, 2011) (SR–FICC–2011–05).

[12] Securities Exchange Act Release No. 65213 (August 29, 2011), 76 FR 54824 (September 2, 2011) (SR–FICC–2011–05).

[13] The 2012 Pilot Program implemented several changes which, although described in the rule filing that accompanied the 2011 Pilot Program, were not implemented during the 2011 Pilot Program's period of effectiveness. They include: (i) Moving the time for unwinding repos from 7:30 a.m. to 3:30 p.m.; (ii) moving the net-free-equity process from morning to the evening; and (iii) establishing rules for intraday GCF Repo collateral substitutions. *See* Securities Exchange Act Release No. 67227 (June 20, 2012), 77 FR 38108, 38111–12 (June 26, 2012) (SR–FICC–2012–05).

[14] Securities Exchange Release No. 67621 (August 8, 2012), 77 FR 48572 (August 14, 2012) (SR–FICC–2012–05).

[15] *See* Securities Exchange Act Release Nos. 67227 (June 20, 2012), 77 FR 38108, 38109–12 (June 26, 2012) (SR–FICC–2012–05); 67621 (August 8, 2012), 77 FR 48572, 48572–76 (August 14, 2012) (SR–FICC–2012–05); 69774 (June 17, 2013), 78 FR 37631, 37632–35 (June 21, 2013) (SR–FICC–2013–06); and 70068 (July 30, 2013), 78 FR 47453, 47453–54 (August 5, 2013) (SR–FICC–2013–06).

[16] FICC would be required to file a proposed rule change with the Commission pursuant to Section 19(b) of the Act if were to do any of the following: (i) Change the parameters of the GCF Repo® service during the one-year extension period, (ii) extend the Pilot Program beyond the one-year period extension period, or (iii) establish the 2013 Pilot Program as a permanent program.

[17] 15 U.S.C. 78s(b)(2)(C).

regulatory organization if it finds that such proposed rule change is consistent with the requirements of the Act and the rules and regulations thereunder applicable to such organization. Section 17A(b)(3)(F) of the Act [18] requires, among other things, that the rules of a clearing agency be designed to achieve several goals, including (i) promoting the prompt and accurate clearance and settlement of securities transactions and, to the extent applicable, derivative agreements, contracts, and transactions, (ii) assuring the safeguarding of securities and funds that are in the custody or control of the clearing agency or for which it is responsible, and (iii) protecting investors and the public interest.

The Commission concludes that extending the 2013 Pilot Program for one additional year is consistent with the requirements of the Act and the rules and regulations thereunder. The 2013 Pilot Program furthers the Act's goals because it helps attenuate the substantial risks confronting the tri-party repo market, particularly those risks associated with the provision of intraday credit to market participants.[19] The Commission believes that extending the 2013 Pilot Program will ensure that these risks remain subject to more stringent controls and that this, in turn, will help promote the prompt and accurate clearance and settlement of securities transactions. The Commission further believes that, by requiring tri-party repos to remain collateralized for a longer period each day, the 2013 Pilot Program helps to assure the safety of the securities and funds within FICC's control, or for which it is responsible.[20]

III. Conclusion

On the basis of the foregoing, the Commission finds that the proposed rule change is consistent with the requirements of the Act, particularly those set forth in Section 17A,[21] and the rules and regulations thereunder.

It is therefore ordered, pursuant to Section 19(b)(2) of the Act,[22] that the proposed rule change (SR–FICC–2014–02) be, and hereby is, *approved.*[23]

For the Commission, by the Division of Trading and Markets, pursuant to delegated authority.[24]

Kevin M. O'Neill,

Deputy Secretary.

[FR Doc. 2014–15203 Filed 6–27–14; 8:45 am]

BILLING CODE 8011–01–P

[18] 15 U.S.C. 78q–1(b)(3)(F).

[19] The TPR characterized the ''practical elimination'' of this intraday credit as its ''first and most significant . . . recommendation.'' Tri-Party Repo Infrastructure Reform Task Force Final Report, 4 (February 15, 2012), *available at http://www.newyorkfed.org/tripartyrepo/pdf/report_120215.pdf.*

[20] *See* 15 U.S.C. 78q–1(b)(3)(F).

[21] 15 U.S.C. 78q–1.

[22] 15 U.S.C. 78s(b)(2).

[23] In approving the proposed rule change, the Commission considered the proposal's impact on efficiency, competition, and capital formation. *See* 15 U.S.C. 78c(f).

[24] 17 CFR 200.30–3(a)(12).

DEPARTMENT OF TRANSPORTATION

[Docket No. DOT–OST–2014–0102]

Office of Inspector General; Proposed Agency Information Collection Activities; Comment Request

AGENCY: Office of the Inspector General (OIG), Department of Transportation.

ACTION: Notice and request for comments.

SUMMARY: The Department of Transportation (DOT) invites public comments about our intention to request the Office of Management and Budget (OMB) approval for a new information collection. The collection involves the nation's large and medium hub airports and their participation in hiring Disadvantaged Business Enterprises (DBEs), and what has led to airports' successes and failures in achieving their goals in regards to the DBE program. The information to be collected will be used to inform the Office of Inspector General and the Department of Transportation on factors that led to the successful hiring of DBE's at airports around the nation. We are required to publish this notice in the **Federal Register** by the Paperwork Reduction act of 1995, Public Law 104–13.

DATES: Comments must be submitted on or before August 29, 2014.

ADDRESSES: You may submit comments by Federal Docket Management System (FDMS) Docket Number DOT–OST–2014–0102 using any of the following methods:

- *Federal eRulemaking Portal: http://www.regulations.gov.* Follow the online instructions for submitting comments.
- *Fax:* 1 (202) 493–2251
- *Mail:* Docket Management System, U.S. Department of Transportation, 1200 New Jersey Avenue, SE., West Building, Room W12–140, Washington, DC 20590
- *Hand Deliver:* West building, Ground Floor, Room 12–140, 1200 New Jersey Avenue SE., Washington, DC, between 9:00 a.m. and 5:00 p.m., ET, Monday through Friday, except Federal holidays.

FOR FURTHER INFORMATION CONTACT: Amy Berks, Office of Legal Counsel, Office of Inspector General, Department of Transportation, 202–366–7165, 1200 New Jersey Ave. SE., Washington, DC 20590.

SUPPLEMENTARY INFORMATION: *Title:* OIG Data Collection for DBE Participation at Large and Medium Hub Airports.

Form Numbers: N/A.

Type of Review: New Information Collection.

Background: Under section 140(c) of the FAA Modernization and Reform Act of 2012, the Office of Inspector General, Department of Transportation has been directed to report on the nation's large and medium hub airports regarding their ability to hire new DBEs, assess the reasons why the most successful airports have been able to provide such opportunities, and to give recommendations to the FAA and Congress on methods for other airports to achieve results similar to those of the top airports. The information to be collected will help OIG establish which airports have been successful in the DBE hiring process and factors that led to their success.

OIG plans to collect information from large and medium hub airports on DBE programs and DBE participation. The respondents consist of the approximately 65 large and medium hub airports that receive funding from the FAA and are required to have a DBE program. Large hub airports are defined as commercial airports that have at least 1.0 percent of passenger boardings. Medium hub airports are defined as commercial airports that have at least .25 percent but less than 1.0 percent of passenger boardings. OIG plans to collect the information primarily by conducting interviews. OIG will send out a questionnaire in advance to the airports, to allow the airports to collect responsive information and documents and prepare for the interview.

Respondents: Large and medium hub airports.

Number of Respondents: Approximately 65.

Frequency: Annually.

Number of Responses: One per annum.

Estimated Time per Response: Total information collection: 8 hours per respondent; subsequent interview process: 4 hours per respondent.

Total Annual Burden: Approximately 780 hours. Approximately 65 respondents with 12 total burden hours per respondent.

Public Comments are Invited: You are asked to comment on any aspect of this information collection, including: (1) Whether the proposed collection of information is necessary for the proper performance of the OIG's functions,

including whether the information will have practical utility; (2) the accuracy of the estimated burden of the proposed information collection; (3) ways for the OIG to enhance the quality, usefulness, and clarity of the collected information; and (4) ways that the burden could be minimized on respondents, including the use of automated collection techniques or other forms of information technology without reducing the quality of the collected information. The agency will summarize or include your comments in the request for OMB's clearance of this information collection.

Authority: The Paperwork Reduction Act of 1995; 44 U.S.C. Chapter 35, as amended; and 49 CFR 1:48. Issued in Washington, DC, on June 24th, 2014.

Dated: June 24, 2014.

Joseph Comé,

Deputy Principal Assistant Inspector General for Auditing and Evaluation, Office of Inspector General.

[FR Doc. 2014–15315 Filed 6–27–14; 8:45 am]

BILLING CODE 4910–9X–P

DEPARTMENT OF TRANSPORTATION

Office of the Secretary

[Docket Number DOT–OST–2014–0073]

Office of Small and Disadvantaged Business Utilization (OSDBU) Mentor Protégé Pilot Program

ACTION: Notice and request for comments.

SUMMARY: The Department of Transportation (DOT) invites public comments about our intention to request the Office of Management and Budget (OMB) to approve an information collection regarding the DOT's existing small business Mentor-Protégé pilot program. If approved by OMB, this information collection would request program participants to submit their mentor-protégé relationship agreements for review, and file a joint report on an annual basis documenting the assistance they have provided or received. In addition, program participants would be asked to complete an evaluation form at the end of their participation in the program, and protégés would be asked to update OSDBU annually for 2 years after they exit the program.

DATES: Written comments should be submitted by on or before August 11, 2014.

ADDRESSES: You may submit comments [identified by Docket No. DOT–OST–2014–0073] through one of the following methods:

- *Federal eRulemaking Portal: http://www.regulations.gov.* Follow the online instructions for submitting comments.
- *Fax:* 1 (202) 493–2251.
- *Mail or Hand Delivery:* Docket Management Facility, U.S. Department of Transportation, 1200 New Jersey Avenue SE., West Building, Room W12–140, Washington, DC 20590, between 9 a.m. and 5 p.m., Monday through Friday, except on Federal holidays.

FOR FURTHER INFORMATION CONTACT: Leonardo San Román, Mentor-Protégé pilot program, U.S. Department of Transportation, Office of Small and Disadvantaged Business Utilization, 1200 New Jersey Avenue SE., Washington, DC 20590, (202) 366–1930.

SUPPLEMENTARY INFORMATION: In April 2012,[1] the DOT launched a Mentor-Protégé pilot program to enhance the capability of disadvantaged and small business owners to compete for federal procurement opportunities. The Mentor-Protégé pilot program is designed to assist small businesses in developing the necessary tools and relationships to compete and perform in DOT and other federal procurement programs. Small businesses include small disadvantaged businesses, women owned businesses, HUBZone small businesses, veteran-owned-businesses and service disabled veteran-owned small businesses. The program is designed to improve the performance of DOT contractors and subcontractors by fostering the establishment of long-term business relationships between small businesses and prime contractors.

Eligible businesses who are prime contractors may agree to mentor eligible protégés. The mentors would provide appropriate developmental assistance to enhance the capabilities of protégés to perform as contractors and/or subcontractors.

Since the inception of the program, small business concerns participating in the program have been able to develop their core capabilities, enabling them to compete and perform in federal contracts. Therefore, DOT is continuing the Mentor Protégé program, allowing increased participation as indicated below.

Information Collection

Under this new proposed information collection, we request that participants submit their mentor-protégé agreements for review. We request that only one copy of the joint agreement be submitted to OSDBU. In addition, once the agreement is reviewed, we would request that the participants submit annual report to the OSDBU describing their progress. The report may be developed jointly by the mentor and protégé, so only one annual report per mentor-protégé relationship would be submitted. If the relationship extends beyond the first year, we would request that the participants submit an annual update. The annual report would include information about the action taken or suggested by the mentor to increase the participation of the protégé in federal procurement programs; actions taken or suggested to develop the technical capabilities of the protégé; and the degree to which the protégé has been able to implement those actions or recommendations. Once the mentor-protégé relationship has ended, we would also request that each program participant complete a program evaluation and submit it to the OSDBU. The purpose of the evaluation form is to provide feedback to the OSDBU on the program, with suggestions for improvement. In addition, we would ask protégés, once they have exited the program, to continue to provide annual updates to OSDBU for up to two years, describing their progress in participating in federal procurement programs.

The estimated burden for this proposed collection is as follows:

(1) *Form:* Mentor Protégé agreement.

Type of Review: New Information Collection.

Affected Public: Prime contractors and small businesses interested in participating in DOT's Mentor Protégé Program.

Estimated Annual Number of Responses: Approximately 8.

Frequency: One-time.

Estimated Average Burden per Response: 4 hours.

Estimated Total Annual Burden Hours: 32 hours.

(2) *Form:* Mentor Protégé program annual report.

Type of Review: New Information Collection.

Affected Public: Prime contractors and small businesses participating in DOT's Mentor Protégé Program.

Estimated Annual Number of Responses: 8

Frequency: One-time.

Estimated Average Burden per Response: 1 hour.

Estimated Total Annual Burden Hours: 8 hours.

(3) *Form:* Mentor Protégé program evaluation form.

[1] Although The National Defense Authorization Act for Fiscal Year 2013, Public Law 112–239, § 1641, prohibits Federal agencies from establishing new programs, this provision does not apply to programs in existence on the date of the Act. Rather, agencies with existing programs in place as of the date of the Act may continue to implement and make modifications to their programs, as is the case here.

Type of Review: New Information Collection.

Affected Public: Prime contractors and small businesses participating in DOT's Mentor Protégé Program.

Estimated Annual Number of Responses: 16

Frequency: One-time.

Estimated Average Burden per Response: 1 hour per respondent.

Estimated Total Annual Burden Hours: 16 hours.

Extending the Duration of the Relationship

The duration of the mentorship will be determined by the mentor and protégé. We anticipate in most cases, this period will be 12 months, but some participants may want to extend their mentorship relationship. Currently, the DOT allows for this relationship to be extended up to 24 months. However, the DOT proposes to amend the 24 month cap and allow the relationship to be extended up to 36 months. We received anecdotal information from program participants and other businesses expressing that a longer relationship may be beneficial to the firms. Program participants should be able to develop long range developmental plans up to 36 months benefiting small business concerns to receive additional technical assistance; otherwise not received due to time constraints and limitations. In addition, other federal government Mentor-Protégé programs allow their participants to establish a relationship for up to 36 months.

Reports Beyond Program Participation

DOT's Mentor Protégé program's primary goal is to provide developmental assistance to help small business to compete and perform on federal procurement opportunities. It's important to DOT to ensure the developmental assistance received by protégés during their program participation helps them to succeed beyond the term of the Mentor Protégé agreement. DOT will request firms participating as protégés in the program to agree to report its progress to the OSDBU annually for two (2) years after exiting the program. OSDBU will not request this of Mentors.

For additional information related to the Mentor Protégé program, visit OSDBU's Web site at *www.dot.gov/osdbu*.

Issued in Washington, DC, on June 19, 2014.

Brandon Neal,

Director, Office of Small and Disadvantaged Business Utilization.

[FR Doc. 2014–15316 Filed 6–27–14; 8:45 am]

BILLING CODE 4910–9X–P

DEPARTMENT OF TRANSPORTATION

Office of the Secretary

Notice of Applications for Certificates of Public Convenience and Necessity and Foreign Air Carrier Permits Filed Under Subpart B (Formerly Subpart Q) During the Week Ending June 14, 2014

The following Applications for Certificates of Public Convenience and Necessity and Foreign Air Carrier Permits were filed under Subpart B (formerly Subpart Q) of the Department of Transportation's Procedural Regulations (See 14 CFR 301.201 et. seq.). The due date for Answers, Conforming Applications, or Motions to Modify Scope are set forth below for each application. Following the Answer period DOT may process the application by expedited procedures. Such procedures may consist of the adoption of a show-cause order, a tentative order, or in appropriate cases a final order without further proceedings.

Docket Number: DOT–OST–2014–0097.

Date Filed: June 9, 2014.

Due Date for Answers, Conforming Applications, or Motion to Modify Scope: June 30, 2014.

Description: Application of Jet Aviation Flight Services, Inc. requesting certificate of public convenience and necessity authorizing interstate charter air transportation.

Docket Number: DOT–OST–2014–0098.

Date Filed: June 9, 2014.

Due Date for Answers, Conforming Applications, or Motion to Modify Scope: June 30, 2014.

Description: Application of Jet Aviation Flight Services, Inc. requesting a certificate of public convenience and necessity authorizing foreign charter air transportation of persons, property and mail.

Barbara J. Hairston,

Supervisory Dockets Officer, Docket Operations, Federal Register Liaison.

[FR Doc. 2014–15245 Filed 6–27–14; 8:45 am]

BILLING CODE 4910–9X–P

DEPARTMENT OF TRANSPORTATION

Federal Aviation Administration

[Summary Notice No. PE–2014–41]

Petition for Exemption; Summary of Petition Received

AGENCY: Federal Aviation Administration (FAA), DOT.

ACTION: Notice of petition for exemption received.

SUMMARY: This notice contains a summary of a petition seeking relief from specified requirements of 14 CFR. The purpose of this notice is to improve the public's awareness of, and participation in, this aspect of FAA's regulatory activities. Neither publication of this notice nor the inclusion or omission of information in the summary is intended to affect the legal status of the petition or its final disposition.

DATES: Comments on this petition must identify the petition docket number and must be received on or before July 21, 2014.

ADDRESSES: You may send comments identified by Docket Number FAA–2014–0367 using any of the following methods:

- *Government-wide rulemaking Web site:* Go to *http://www.regulations.gov* and follow the instructions for sending your comments electronically.
- *Mail:* Send comments to the Docket Management Facility; U.S. Department of Transportation, 1200 New Jersey Avenue SE., West Building Ground Floor, Room W12–140, Washington, DC 20590.
- *Fax:* Fax comments to the Docket Management Facility at 202–493–2251.
- *Hand Delivery:* Bring comments to the Docket Management Facility in Room W12–140 of the West Building Ground Floor at 1200 New Jersey Avenue SE., Washington, DC, between 9 a.m. and 5 p.m., Monday through Friday, except Federal holidays.

Privacy: We will post all comments we receive, without change, to *http://www.regulations.gov,* including any personal information you provide. Using the search function of our docket Web site, anyone can find and read the comments received into any of our dockets, including the name of the individual sending the comment (or signing the comment for an association, business, labor union, etc.). You may review DOT's complete Privacy Act Statement in the **Federal Register** published on April 11, 2000 (65 FR 19477–78).

Docket: To read background documents or comments received, go to *http://www.regulations.gov* at any time or to the Docket Management Facility in Room W12–140 of the West Building Ground Floor at 1200 New Jersey Avenue SE., Washington, DC, between 9 a.m. and 5 p.m., Monday through Friday, except Federal holidays.

FOR FURTHER INFORMATION CONTACT: Jake Troutman, (202) 267–9521, 800 Independence Avenue SW., Washington, DC, 20951.

This notice is published pursuant to 14 CFR 11.85.

Issued in Washington, DC, on June 24, 2014.

Lirio Liu,

Director, Office of Rulemaking.

Petition for Exemption

Docket No.: No. FAA–2014–0367

Petitioner: Trimble Navigation Limited

Section of 14 CFR: part 21, 45.23(b), 61.113(a)(b), 61.133(a), 91.7(b), 91.9(b)(2), 91.109(a), 91.119.

Description of Relief Sought: Trimble Navigation Limited is seeking an exemption to permit commercial operation of Trimble's UX5, which weighs 5.5 lbs and performs precision aerial surveys that consist of still photographs taken by onboard cameras.

[FR Doc. 2014–15195 Filed 6–27–14; 8:45 am]

BILLING CODE 4910–13–P

DEPARTMENT OF TRANSPORTATION

Federal Aviation Administration

Notice of Intent to Rule on Request To Release Deed Restrictions at the Yellowstone Airport, West Yellowstone, Montana

AGENCY: Federal Aviation Administration (FAA), DOT.

ACTION: Notice To Rescind a Notice of Intent to Rule on Request to Release Deed Restrictions at the Yellowstone Airport, West Yellowstone, Montana.

SUMMARY: The Federal Aviation Administration is issuing this notice to advise the public that, effective immediately, it is rescinding the Notice of Intent to rule on the request to release deed restrictions at Yellowstone Airport under the provisions of Title 49, U.S.C. Section 47125 that was published on January 28, 2014. A re-opening and extension of the comment period was published on March 14, 2014. This rescission is due to the comments received regarding this notice. The request to release the deed restrictions may be reconsidered after further analysis and a Notice of Intent would be published at a later date.

FOR FURTHER INFORMATION CONTACT: Mr. David S. Stelling, Manager, Federal Aviation Administration, Northwest Mountain Region, Airports Division, Helena Airports District Office, 2725 Skyway Drive, Suite 2, Helena, Montana 59602.

Issued in Helena, Montana, on June 24, 2014.

David S. Stelling,

Manager, Helena Airports District Office.

[FR Doc. 2014–15314 Filed 6–27–14; 8:45 am]

BILLING CODE 4910–13–P

DEPARTMENT OF TRANSPORTATION

Federal Railroad Administration

[Docket No. FRA 2014–0011–N–13]

Proposed Agency Information Collection Activities; Comment Request

AGENCY: Federal Railroad Administration (FRA), Department of Transportation (DOT).

ACTION: Notice.

SUMMARY: In accordance with the Paperwork Reduction Act of 1995 and its implementing regulations, the Federal Railroad Administration (FRA) hereby announces that it is seeking an extension of the following currently approved information collection activities. On May 7, 2014, the Secretary of Transportation issued Emergency Order Docket No. DOT–OST–2014–0067 (EO), requiring affected railroad carriers to provide certain information to the State Emergency Response Commissions (SERCs) for each State in which their trains carrying 1 million gallons or more of Bakken crude oil travel. The information collection activities associated with the Secretary's Emergency Order received a six-month emergency approval from OMB on May 10, 2014. FRA seeks a regular clearance (extension of the current approval for three years) while it is determining the proper course of action to take after a recent series of train accidents involving the transportation petroleum crude oil, a hazardous material the transportation of which is regulated by the Department of Transportation. Before submitting these information collection requirements for clearance by the Office of Management and Budget (OMB), FRA is soliciting public comment on specific aspects of the activities identified below.

DATES: Comments must be received no later than August 29, 2014.

ADDRESSES: Submit written comments on any or all of the following proposed activities by mail to either: Mr. Robert Brogan, Office of Safety, Planning and Evaluation Division, RRS–21, Federal Railroad Administration, 1200 New Jersey Ave. SE., Mail Stop 17, Washington, DC 20590, or Ms. Kimberly Toone, Office of Information Technology, RAD–20, Federal Railroad Administration, 1200 New Jersey Ave. SE., Mail Stop 35, Washington, DC 20590. Commenters requesting FRA to acknowledge receipt of their respective comments must include a self-addressed stamped postcard stating, ''Comments on OMB control number 2130–0604.'' Alternatively, comments may be transmitted via facsimile to (202) 493–6216 or (202) 493–6497, or via email to Mr. Brogan at *Robert.Brogan@dot.gov,* or to Ms. Toone at *Kim.Toone@dot.gov.* Please refer to the assigned OMB control number in any correspondence submitted. FRA will summarize comments received in response to this notice in a subsequent notice and include them in its information collection submission to OMB for approval.

FOR FURTHER INFORMATION CONTACT: Mr. Robert Brogan, Office of Planning and Evaluation Division, RRS–21, Federal Railroad Administration, 1200 New Jersey Ave. SE., Mail Stop 17, Washington, DC 20590 (telephone: (202) 493–6292) or Ms. Kimberly Toone, Office of Information Technology, RAD–20, Federal Railroad Administration, 1200 New Jersey Ave. SE., Mail Stop 35, Washington, DC 20590 (telephone: (202) 493–6132). (These telephone numbers are not toll-free.)

SUPPLEMENTARY INFORMATION: The Paperwork Reduction Act of 1995 (PRA), Public Law 104–13, sec. 2, 109 Stat. 163 (1995) (codified as revised at 44 U.S.C. 3501–3520), and its implementing regulations, 5 CFR part 1320, require Federal agencies to provide 60-days notice to the public for comment on information collection activities before seeking approval for reinstatement or renewal by OMB. 44 U.S.C. 3506(c)(2)(A); 5 CFR 1320.8(d)(1), 1320.10(e)(1), 1320.12(a). Specifically, FRA invites interested respondents to comment on the following summary of proposed information collection activities regarding (i) whether the information collection activities are necessary for FRA to properly execute its functions, including whether the activities will have practical utility; (ii) the accuracy of FRA's estimates of the burden of the information collection activities, including the validity of the methodology and assumptions used to determine the estimates; (iii) ways for FRA to enhance the quality, utility, and clarity of the information being collected; and (iv) ways for FRA to minimize the burden of information collection activities on the public by automated, electronic, mechanical, or other technological collection techniques or other forms of information technology (*e.g.,* permitting electronic submission of responses). *See* 44 U.S.C. 3506(c)(2)(A)(I)–(iv); 5 CFR 1320.8(d)(1)(I)–(iv). FRA believes that soliciting public comment will promote its efforts to reduce the administrative and paperwork burdens associated with the collection of information mandated

by Federal regulations. In summary, FRA reasons that comments received will advance three objectives: (i) Reduce reporting burdens; (ii) ensure that it organizes information collection requirements in a ''user friendly'' format to improve the use of such information; and (iii) accurately assess the resources expended to retrieve and produce information requested. *See* 44 U.S.C. 3501.

Below are brief summaries of three currently approved information collection activities that FRA will submit for clearance by OMB as required under the PRA:

Title: Secretary of Transportation Emergency Order Docket No. DOT–OST–2014–0067.

OMB Control Number: 2130–0604.

Abstract: As noted in the summary above, on May 7, 2014, the Secretary of Transportation issued Emergency Order Docket No. DOT–OST–2014–0067 (EO), requiring affected railroad carriers to provide certain information to the State Emergency Response Commissions (SERCs) for each State in which their trains carrying 1 million gallons or more of Bakken crude oil travel. This EO is available through the Department's public docket system at *www.regulations.gov,* under Docket No. DOT–OST–2014–0067. The EO took effect immediately upon issuance, although affected railroads were permitted 30 days to provide the required information to the SERCs. The EO is the Department's direct and proactive response to a recent series of train accidents involving the transportation of petroleum crude oil, a hazardous material the transportation of which is regulated by the Department. The most recent accident occurred on April 30, 2014, when a train transporting petroleum crude oil derailed in Lynchburg, Virginia and released approximately 30,000 gallons of its contents into the James River. Further, the EO explains that, with the rising demand for rail transportation of petroleum crude oil throughout the United States, the risk of rail incidents has increased commensurate with the increase in the volume of the material shipped and that there have been several significant derailments in both the U.S. and Canada over the last several months causing deaths and property and environmental damage that involved petroleum crude oil. DOT emergency orders are rare and the EO itself describes the most recent accidents and circumstances leading the agency to issue the EO. The collection of information included under this EO is aimed at ensuring that railroads that transport in a single train a large quantity of petroleum crude oil (1 million gallons or more), particularly crude oil from the Bakken shale formation in the Williston Basin, provide certain information to the relevant SERCs in each State in which the railroad operates such trains. Ensuring that railroads provide this information to SERCs is critical to ensuring that local and State emergency responders are aware of the large quantities of crude oil that are being transported through their jurisdictions and are prepared to respond to accidents involving such trains should they occur.

Form Number(s): N/A.

Affected Public: Businesses.

Frequency of Submission: One-time; on occasion.

Respondent Universe: 47 Railroad Carriers; 50 State Emergency Response Commissions (SERCs).

Reporting Burden:

Emergency order item No.	Respondent universe (railroads)	Total annual responses	Average time per response	Total annual burden hours
(1) RR Notification to SERCs	47	120 written notifications	30 hours	3,600.
(2) Updated RR Notification to SERCs	47	25 updated written notifications.	4 hours	100.
(3) Notification Copies to FRA	47	10 notification copies	60 minutes	10.
(4) Requests to RRs by SERCs for Information from Local Emergency Response Agencies Regarding the Volume and Frequency of Train Traffic Implicated by this Emergency Order within that Agency's Jurisdiction and RR Responses.	47	30 informational assistance requests + 30 informational responses.	30 minutes	60.
(5) Petitions to the Secretary/FRA Administrator for Relief from This Emergency Order.	47	4 relief petitions	2 hours	8.

Total Estimated Responses: 219.

Total Estimated Annual Burden: 3,778 hours.

Status: Regular Review.

Pursuant to 44 U.S.C. 3507(a) and 5 CFR 1320.5(b), 1320.8(b)(3)(vi), FRA informs all interested parties that it may not conduct or sponsor, and a respondent is not required to respond to, a collection of information unless it displays a currently valid OMB control number.

Authority: 44 U.S.C. 3501–3520.

Issued in Washington, DC, on June 24, 2014.

Erin McCartney,

Acting Chief Financial Officer.

[FR Doc. 2014–15174 Filed 6–27–14; 8:45 am]

BILLING CODE 4910–06–P

DEPARTMENT OF TRANSPORTATION

Federal Railroad Administration

[Docket Number FRA–2011–0093]

Petition for Waiver of Compliance

In accordance with part 211 of Title 49 Code of Federal Regulations (CFR), this document provides the public notice that by a letter dated May 14, 2014, Peninsula Terminal Railway (PT) has petitioned the Federal Railroad Administration (FRA) for an extension of its waiver of compliance from certain provisions of the Federal hours of service laws contained at 49 U.S.C. 21103(a)(4). FRA assigned the petition Docket Number FRA–2011–0093.

In its petition, PT seeks relief from 49 U.S.C. 21103(a)(4) that in part requires a train employee to receive 48 hours off duty after initiating an on-duty period for 6 consecutive days. Specifically, PT seeks a waiver to allow a train employee to initiate an on-duty period, each day, for 6 consecutive days followed by 24 hours off duty. In support of its request, PT explained that it has five train and engine service employees covered by the waiver, and these employees have set hours, set days off, and do not lay over at away-from-home locations. PT provided work schedules for the employees covered by the waiver, which shows them working Monday through Friday, reporting at 7:00 a.m., and working an average of 8 hours, with a crew occasionally working on Sunday for 4 hours or less. PT also explained that all employees covered by the

waiver work well below the Federal 276-hour monthly limit. Finally, PT stated that all employees covered by the waiver were provided information about the waiver extension petition, and that there were no objections to the waiver extension by these employees.

A copy of the petition, as well as any written communications concerning the petition, is available for review online at *www.regulations.gov* and in person at the U.S. Department of Transportation's (DOT) Docket Operations Facility, 1200 New Jersey Avenue SE., W12–140, Washington, DC 20590. The Docket Operations Facility is open from 9 a.m. to 5 p.m., Monday through Friday, except Federal Holidays.

Interested parties are invited to participate in these proceedings by submitting written views, data, or comments. FRA does not anticipate scheduling a public hearing in connection with these proceedings since the facts do not appear to warrant a hearing. If any interested party desires an opportunity for oral comment, they should notify FRA, in writing, before the end of the comment period and specify the basis for their request.

All communications concerning these proceedings should identify the appropriate docket number and may be submitted by any of the following methods:

- *Web site: http://www.regulations.gov.* Follow the online instructions for submitting comments.
- *Fax:* 202–493–2251.
- *Mail:* Docket Operations Facility, U.S. Department of Transportation, 1200 New Jersey Avenue SE., W12–140, Washington, DC 20590.
- *Hand Delivery:* 1200 New Jersey Avenue SE., Room W12–140, Washington, DC 20590, between 9 a.m. and 5 p.m., Monday through Friday, except Federal Holidays.

Communications received by August 14, 2014 will be considered by FRA before final action is taken. Comments received after that date will be considered as far as practicable.

Anyone is able to search the electronic form of any written communications and comments received into any of our dockets by the name of the individual submitting the comment (or signing the comment, if submitted on behalf of an association, business, labor union, etc.). See *http://www.regulations.gov/#!privacyNotice* for the privacy notice of regulations.gov or interested parties may review DOT's complete Privacy Act Statement in the **Federal Register** published on April 11, 2000 (65 FR 19477).

Issued in Washington, DC, on June 20, 2014.

Ron Hynes,

Director, Office of Safety Assurance and Compliance.

[FR Doc. 2014–15231 Filed 6–27–14; 8:45 am]

BILLING CODE 4910–06–P

DEPARTMENT OF TRANSPORTATION

Federal Railroad Administration

Notice of Application for Approval of Railroad Safety Program Plans and Product Safety Plans

In accordance with Part 236 of Title 49 Code of Federal Regulations and 49 U.S.C. 20502(a), this document provides the public notice that by documents dated March 31, 2014, the railroads listed below have petitioned the Federal Railroad Administration (FRA) for approval of their Railroad Safety Program Plans (RSPP) and Product Safety Plans (PSP) for the Railsoft TrackAccess system. FRA assigned the petitions the following docket numbers:

- *Kettle Falls International Railway:* FRA–2014–0049.
- *Georgia & Florida Railway:* FRA–2014–0050.
- *Nebraska, Kansas & Colorado Railway:* FRA–2014–0052.
- *Panhandle Northern Railroad:* FRA–2014–0053.
- *Illinois Railway:* FRA–2014–0051.

TrackAccess is a processor-based dispatch system developed for operation in autonomous mode (without dispatcher intervention) for low-density rail lines. The system provides a processor-based methodology of requesting and issuing track authority to either qualified train crewmembers or roadway workers. It does so while increasing railroad productivity and significantly improving the safety of train operations, roadway workers, and other railway equipment.

FRA is providing public notice that the railroads' RSPPs and related documents have been placed in the dockets listed above and are available for public inspection. FRA is not accepting public comment on the RSPP documents; notice regarding these documents is provided for information only.

FRA is accepting comments on the PSPs for each railroad, which are posted in the dockets listed above for public inspection. The railroads assert that their RSPPs and PSPs contain the same information and analysis as the Alabama & Tennessee River Railway's (ATN) RSPP Revision 1, dated February 16, 2009, and the ATN PSP Revision 1, dated March 15, 2012. The ATN RSPP Revision 1 and the ATN PSP Revision 1 were previously approved by FRA on January 28, 2014 (Docket FRA–2013–0088).

The PSPs provide descriptions of the TrackAccess system. The railroads state that in the case of ATN, FRA found that the PSP demonstrates that TrackAccess was designed in a highly safe manner and was sufficiently tested to verify that fact. FRA approved the use of TrackAccess in autonomous mode for ATN. The railroads assert that since their RSPPs and PSPs contain the same programmatic and technical information as the FRA-approved ATN RSPP Revision 1 and PSP Revision 1, including autonomous TrackAccess operations, these railroads should also be allowed to use TrackAccess in an autonomous mode.

Copies of the petitions, as well as any written communications concerning the petitions, are available for review online at *www.regulations.gov* and in person at the U.S. Department of Transportation's (DOT) Docket Operations Facility, 1200 New Jersey Avenue SE., W12–140, Washington, DC 20590. The Docket Operations Facility is open from 9 a.m. to 5 p.m., Monday through Friday, except Federal Holidays.

Interested parties are invited to participate in these proceedings by submitting written views, data, or comments. FRA does not anticipate scheduling a public hearing in connection with these proceedings since the facts do not appear to warrant a hearing. If any interested party desires an opportunity for oral comment, they should notify FRA, in writing, before the end of the comment period and specify the basis for their request.

All communications concerning these proceedings should identify the appropriate docket number and may be submitted by any of the following methods:

- *Web site: http://www.regulations.gov.* Follow the online instructions for submitting comments.
- *Fax:* 202–493–2251.
- *Mail:* Docket Operations Facility, U.S. Department of Transportation, 1200 New Jersey Avenue SE., W12–140, Washington, DC 20590.
- *Hand Delivery:* 1200 New Jersey Avenue SE., Room W12–140, Washington, DC 20590, between 9 a.m. and 5 p.m., Monday through Friday, except Federal Holidays.

Communications received by August 14, 2014 will be considered by FRA before final action is taken. Comments received after that date will be considered as far as practicable.

Anyone is able to search the electronic form of any written

communications and comments received into any of our dockets by the name of the individual submitting the comment (or signing the document, if submitted on behalf of an association, business, labor union, etc.). See *http://www.regulations.gov/#!privacyNotice* for the privacy notice of regulations.gov or interested parties may review DOT's complete Privacy Act Statement in the **Federal Register** published on April 11, 2000 (65 FR 19477).

Issued in Washington, DC, on June 20, 2014.

Ron Hynes,

Director, Office of Safety Assurance and Compliance.

[FR Doc. 2014–15232 Filed 6–27–14; 8:45 am]

BILLING CODE 4910–06–P

DEPARTMENT OF TRANSPORTATION

Maritime Administration

[Docket No. MARAD–2014–0090]

Requested Administrative Waiver of the Coastwise Trade Laws: Vessel ESSANZA; Invitation for Public Comments

AGENCY: Maritime Administration, Department of Transportation.

ACTION: Notice.

SUMMARY: As authorized by 46 U.S.C. 12121, the Secretary of Transportation, as represented by the Maritime Administration (MARAD), is authorized to grant waivers of the U.S.-build requirement of the coastwise laws under certain circumstances. A request for such a waiver has been received by MARAD. The vessel, and a brief description of the proposed service, is listed below.

DATES: Submit comments on or before July 30, 2014.

ADDRESSES: Comments should refer to docket number MARAD–2014–0090. Written comments may be submitted by hand or by mail to the Docket Clerk, U.S. Department of Transportation, Docket Operations, M–30, West Building Ground Floor, Room W12–140, 1200 New Jersey Avenue SE., Washington, DC 20590. You may also send comments electronically via the Internet at *http://www.regulations.gov.* All comments will become part of this docket and will be available for inspection and copying at the above address between 10 a.m. and 5 p.m., E.T., Monday through Friday, except federal holidays. An electronic version of this document and all documents entered into this docket is available on the World Wide Web at *http://www.regulations.gov.*

FOR FURTHER INFORMATION CONTACT: Linda Williams, U.S. Department of Transportation, Maritime Administration, 1200 New Jersey Avenue SE., Room W23–453, Washington, DC 20590. Telephone 202–366–0903, Email *Linda.Williams@dot.gov.*

SUPPLEMENTARY INFORMATION: As described by the applicant the intended service of the vessel ESSANZA is:

Intended Commercial Use Of Vessel: ''Sailing School/Charters.''

Geographic Region: ''Hawaii, California, Oregon, Washington State''

The complete application is given in DOT docket MARAD–2014–0090 at *http://www.regulations.gov.* Interested parties may comment on the effect this action may have on U.S. vessel builders or businesses in the U.S. that use U.S.-flag vessels. If MARAD determines, in accordance with 46 U.S.C. 12121 and MARAD's regulations at 46 CFR part 388, that the issuance of the waiver will have an unduly adverse effect on a U.S.-vessel builder or a business that uses U.S.-flag vessels in that business, a waiver will not be granted. Comments should refer to the docket number of this notice and the vessel name in order for MARAD to properly consider the comments. Comments should also state the commenter's interest in the waiver application, and address the waiver criteria given in § 388.4 of MARAD's regulations at 46 CFR part 388.

Privacy Act

Anyone is able to search the electronic form of all comments received into any of our dockets by the name of the individual submitting the comment (or signing the comment, if submitted on behalf of an association, business, labor union, etc.). You may review DOT's complete Privacy Act Statement in the **Federal Register** published on April 11, 2000 (Volume 65, Number 70; Pages 19477–78).

By Order of the Maritime Administrator.

Dated: June 24, 2014.

Julie P. Agarwal,

Secretary, Maritime Administration.

[FR Doc. 2014–15244 Filed 6–27–14; 8:45 am]

BILLING CODE 4910–81–P

DEPARTMENT OF TRANSPORTATION

Maritime Administration

[Docket No. MARAD–2014–0093]

Requested Administrative Waiver of the Coastwise Trade Laws: Vessel MIAMI OCEAN RAFTING; Invitation for Public Comments

AGENCY: Maritime Administration, Department of Transportation.

ACTION: Notice.

SUMMARY: As authorized by 46 U.S.C. 12121, the Secretary of Transportation, as represented by the Maritime Administration (MARAD), is authorized to grant waivers of the U.S.-build requirement of the coastwise laws under certain circumstances. A request for such a waiver has been received by MARAD. The vessel, and a brief description of the proposed service, is listed below.

DATES: Submit comments on or before July 30, 2014.

ADDRESSES: Comments should refer to docket number MARAD–2014–0093. Written comments may be submitted by hand or by mail to the Docket Clerk, U.S. Department of Transportation, Docket Operations, M–30, West Building Ground Floor, Room W12–140, 1200 New Jersey Avenue SE., Washington, DC 20590. You may also send comments electronically via the Internet at *http://www.regulations.gov.* All comments will become part of this docket and will be available for inspection and copying at the above address between 10 a.m. and 5 p.m., E.T., Monday through Friday, except federal holidays. An electronic version of this document and all documents entered into this docket is available on the World Wide Web at *http://www.regulations.gov.*

FOR FURTHER INFORMATION CONTACT: Linda Williams, U.S. Department of Transportation, Maritime Administration, 1200 New Jersey Avenue SE., Room W23–453, Washington, DC 20590. Telephone 202–366–0903, Email *Linda.Williams@dot.gov.*

SUPPLEMENTARY INFORMATION:

As described by the applicant the intended service of the vessel MIAMI OCEAN RAFTING is:

Intended Commercial Use of Vessel: ''Eco/Snorkel Tour Boat''

Geographic Region: ''Florida''

The complete application is given in DOT docket MARAD–2014–0093 at *http://www.regulations.gov.* Interested parties may comment on the effect this action may have on U.S. vessel builders

or businesses in the U.S. that use U.S.-flag vessels. If MARAD determines, in accordance with 46 U.S.C. 12121 and MARAD's regulations at 46 CFR Part 388, that the issuance of the waiver will have an unduly adverse effect on a U.S.-vessel builder or a business that uses U.S.-flag vessels in that business, a waiver will not be granted. Comments should refer to the docket number of this notice and the vessel name in order for MARAD to properly consider the comments. Comments should also state the commenter's interest in the waiver application, and address the waiver criteria given in § 388.4 of MARAD's regulations at 46 CFR Part 388.

Privacy Act

Anyone is able to search the electronic form of all comments received into any of our dockets by the name of the individual submitting the comment (or signing the comment, if submitted on behalf of an association, business, labor union, etc.). You may review DOT's complete Privacy Act Statement in the **Federal Register** published on April 11, 2000 (Volume 65, Number 70; Pages 19477–78).

Dated: June 24, 2014.

By Order of the Maritime Administrator.

Julie P. Agarwal,

Secretary, Maritime Administration.

[FR Doc. 2014–15252 Filed 6–27–14; 8:45 am]

BILLING CODE 4910–81–P

DEPARTMENT OF TRANSPORTATION

Maritime Administration

[Docket No. MARAD–20140092]

Requested Administrative Waiver of the Coastwise Trade Laws: Vessel ALTHEA; Invitation for Public Comments

AGENCY: Maritime Administration, Department of Transportation.

ACTION: Notice.

SUMMARY: As authorized by 46 U.S.C. 12121, the Secretary of Transportation, as represented by the Maritime Administration (MARAD), is authorized to grant waivers of the U.S.-build requirement of the coastwise laws under certain circumstances. A request for such a waiver has been received by MARAD. The vessel, and a brief description of the proposed service, is listed below.

DATES: Submit comments on or before July 30, 2014.

ADDRESSES: Comments should refer to docket number MARAD–2014–0092. Written comments may be submitted by hand or by mail to the Docket Clerk, U.S. Department of Transportation, Docket Operations, M–30, West Building Ground Floor, Room W12–140, 1200 New Jersey Avenue SE., Washington, DC 20590. You may also send comments electronically via the Internet at *http://www.regulations.gov.* All comments will become part of this docket and will be available for inspection and copying at the above address between 10 a.m. and 5 p.m., E.T., Monday through Friday, except federal holidays. An electronic version of this document and all documents entered into this docket is available on the World Wide Web at *http://www.regulations.gov.*

FOR FURTHER INFORMATION CONTACT: Linda Williams, U.S. Department of Transportation, Maritime Administration, 1200 New Jersey Avenue SE., Room W23–453, Washington, DC 20590. Telephone 202–366–0903, Email *Linda.Williams@dot.gov.*

SUPPLEMENTARY INFORMATION: As described by the applicant the intended service of the vessel ALTHEA is:

Intended Commercial Use Of Vessel: ''Vessel shall be used for specialty sail training in small boat handling, planning and passagemaking with emphasis on recreational cruising''

Geographic Region: ''Puerto Rico, California, Oregon, Washington State, Connecticut, Massachusetts, Maine, New Hampshire, Rhode Island, New York, New Jersey, Delaware, Maryland, Virginia, North Carolina, South Carolina, Florida, Georgia''

The complete application is given in DOT docket MARAD–2014–0092 at *http://www.regulations.gov.* Interested parties may comment on the effect this action may have on U.S. vessel builders or businesses in the U.S. that use U.S.-flag vessels. If MARAD determines, in accordance with 46 U.S.C. 12121 and MARAD's regulations at 46 CFR part 388, that the issuance of the waiver will have an unduly adverse effect on a U.S.-vessel builder or a business that uses U.S.-flag vessels in that business, a waiver will not be granted. Comments should refer to the docket number of this notice and the vessel name in order for MARAD to properly consider the comments. Comments should also state the commenter's interest in the waiver application, and address the waiver criteria given in § 388.4 of MARAD's regulations at 46 CFR part 388.

Privacy Act

Anyone is able to search the electronic form of all comments received into any of our dockets by the name of the individual submitting the comment (or signing the comment, if submitted on behalf of an association, business, labor union, etc.). You may review DOT's complete Privacy Act Statement in the **Federal Register** published on April 11, 2000 (Volume 65, Number 70; Pages 19477–78).

By Order of the Maritime Administrator.

Dated: June 24, 2014.

Julie P. Agarwal,

Secretary, Maritime Administration.

[FR Doc. 2014–15243 Filed 6–27–14; 8:45 am]

BILLING CODE 4910–81–P

DEPARTMENT OF TRANSPORTATION

Maritime Administration

[Docket No. MARAD–20140091]

Requested Administrative Waiver of the Coastwise Trade Laws: Vessel CHRISTI ANNE; Invitation for Public Comments

AGENCY: Maritime Administration, Department of Transportation.

ACTION: Notice.

SUMMARY: As authorized by 46 U.S.C. 12121, the Secretary of Transportation, as represented by the Maritime Administration (MARAD), is authorized to grant waivers of the U.S.-build requirement of the coastwise laws under certain circumstances. A request for such a waiver has been received by MARAD. The vessel, and a brief description of the proposed service, is listed below.

DATES: Submit comments on or before July 30, 2014.

ADDRESSES: Comments should refer to docket number MARAD–2014–0091. Written comments may be submitted by hand or by mail to the Docket Clerk, U.S. Department of Transportation, Docket Operations, M–30, West Building Ground Floor, Room W12–140, 1200 New Jersey Avenue SE., Washington, DC 20590. You may also send comments electronically via the Internet at *http://www.regulations.gov.* All comments will become part of this docket and will be available for inspection and copying at the above address between 10 a.m. and 5 p.m., E.T., Monday through Friday, except federal holidays. An electronic version of this document and all documents entered into this docket is available on the World Wide Web at *http://www.regulations.gov.*

FOR FURTHER INFORMATION CONTACT: Linda Williams, U.S. Department of Transportation, Maritime Administration, 1200 New Jersey

Avenue SE., Room W23–453, Washington, DC 20590. Telephone 202–366–0903, Email *Linda.Williams@dot.gov.*

SUPPLEMENTARY INFORMATION: As described by the applicant the intended service of the vessel CHRISTI ANNE is:

Intended Commercial Use Of Vessel: ''Small charters for sunset cruises, sight seeing, and possible sport fishing.''

Geographic Region: ''Maine, New Hampshire, Massachusetts, Maryland, Rhode Island, Connecticut, New York, New Jersey, Delaware, Virginia, North Carolina, South Carolina, Georgia, Florida.''

The complete application is given in DOT docket MARAD–2014–0091 at *http://www.regulations.gov.* Interested parties may comment on the effect this action may have on U.S. vessel builders or businesses in the U.S. that use U.S.-flag vessels. If MARAD determines, in accordance with 46 U.S.C. 12121 and MARAD's regulations at 46 CFR part 388, that the issuance of the waiver will have an unduly adverse effect on a U.S.-vessel builder or a business that uses U.S.-flag vessels in that business, a waiver will not be granted. Comments should refer to the docket number of this notice and the vessel name in order for MARAD to properly consider the comments. Comments should also state the commenter's interest in the waiver application, and address the waiver criteria given in § 388.4 of MARAD's regulations at 46 CFR part 388.

Privacy Act

Anyone is able to search the electronic form of all comments received into any of our dockets by the name of the individual submitting the comment (or signing the comment, if submitted on behalf of an association, business, labor union, etc.). You may review DOT's complete Privacy Act Statement in the **Federal Register** published on April 11, 2000 (Volume 65, Number 70; Pages 19477–78).

By Order of the Maritime Administrator.
Dated: June 24, 2014.

Julie P. Agarwal,

Secretary, Maritime Administration.

[FR Doc. 2014–15249 Filed 6–27–14; 8:45 am]

BILLING CODE 4910–81–P

DEPARTMENT OF TRANSPORTATION

National Highway Traffic Safety Administration

[U.S. DOT Docket No. NHTSA–2014–0072]

Reports, Forms, and Record Keeping Requirements

AGENCY: National Highway Traffic Safety Administration (NHTSA), DOT.

ACTION: Request for public comment on proposed collection of information.

SUMMARY: Before a Federal agency can collect certain information from the public, it must receive approval from the Office of Management and Budget (OMB). Under procedures established by the Paperwork Reduction Act of 1995, before seeking OMB approval, Federal agencies must solicit public comment on proposed collections of information, including extensions and reinstatements of previously approved collections.

This document describes one collection of information for which NHTSA intends to seek OMB approval.

DATES: Comments must be received on or before August 29, 2014.

ADDRESSES: You may submit comments identified by DOT Docket ID Number NHTSA–2014–0072 using any of the following methods:

Electronic submissions: Go to *http://www.regulations.gov.* Follow the online instructions for submitting comments.

Mail: Docket Management Facility, M–30, U.S. Department of Transportation, 1200 New Jersey Avenue SE., West Building Ground Floor, Room W12–140, Washington, DC 20590.

Hand Delivery: West Building Ground Floor, Room W12–140, 1200 New Jersey Avenue SE., Washington, DC, between 9 a.m. and 5 p.m., Monday through Friday, except Federal holidays.

Fax: 1–202–493–2251.

Instructions: Each submission must include the Agency name and the Docket number for this Notice. Note that all comments received will be posted without change to *http://www.regulations.gov* including any personal information provided.

FOR FURTHER INFORMATION CONTACT: Ms. Liza Lemaster-Sandbank, Contracting Officer's Representative, Occupant Protection Division (NTI–112), Office of Impaired Driving and Occupant Protection, National Highway Traffic Safety Administration, 1200 New Jersey Avenue SE., W44–302, Washington, DC 20590. Ms. Lemaster-Sandbank's phone number is 202–366–4292 and her email address is *liza.lemaster@dot.gov.*

SUPPLEMENTARY INFORMATION: Under the Paperwork Reduction Act of 1995, before an agency submits a proposed collection of information to OMB for approval, it must publish a document in the **Federal Register** providing a 60-day comment period and otherwise consult with members of the public and affected agencies concerning each proposed collection of information. The OMB has promulgated regulations describing what must be included in such a document. Under OMB's regulations (at 5 CFR 1320.8(d)), an agency must ask for public comment on the following:

(i) Whether the proposed collection of information is necessary for the proper performance of the functions of the agency, including whether the information will have practical utility;

(ii) the accuracy of the agency's estimate of the burden of the proposed collection of information, including the validity of the methodology and assumptions used;

(iii) how to enhance the quality, utility, and clarity of the information to be collected; and

(iv) how to minimize the burden of the collection of information on those who are to respond, including the use of appropriate automated, electronic, mechanical, or other technological collection techniques or other forms of information technology, e.g., permitting electronic submission of responses.

In compliance with these requirements, NHTSA asks public comment on the following proposed collection of information:

Title: Implementing a Leadership Framework for Traffic Safety.

Type of Request: New information collection requirement.

OMB Clearance Number: None.

Form Number: NHTSA Forms 1265, 1266, 1267.

Requested Expiration Date of Approval: Three (3) years from date of approval.

Summary of the Collection of Information—The National Highway Traffic Safety Administration (NHTSA) proposes to conduct individual and group interviews with law enforcement officers and leadership who are participating in a leadership framework demonstration to increase law enforcement focus on enforcing seat belt laws. Three law enforcement agencies (a state agency, a municipal agency, and a rural sheriff agency) will participate in the demonstration project, which includes customized technical assistance addressing policies, procedures, data, communication, and other organizational issues. To assess how leadership on seat belt enforcement is communicated and executed

throughout the demonstration agencies, NHTSA proposes to conduct a set of individual interviews with line officers and individual or group interviews with leadership within each demonstration agency. While individual interviews will work best with line officers, either group or individual interviews can work effectively with the senior leadership. Flexibility is built in to this approach in order to be mindful of senior leadership's scheduling constraints. Eighteen individuals will be interviewed at each site for a total of 54 individuals. Each individual will be interviewed twice: once during the project implementation and once at the end of the demonstration project. Interviewees will either be self-selected or selected by the demonstration agencies. The purpose of these interviews is to document how a law enforcement agency implements a new leadership approach for seat belt enforcement so that the experiences of the demonstration sites can serve as a resource to other agencies undertaking new seat belt enforcement initiatives.

The interviews will be audio taped using electronic equipment and augmented by handwritten notes taken during the discussions. No videotaping will occur. Any personally identifiable information will be separated from any summary information. Also, all identifying information collected during initial scheduling will be separated from collected information, kept on a secure server in password protected files, and discarded when no longer needed. All information collected during the interviews will be summarized using generic categories such as law enforcement leadership or line officers.

Description of the Need for the Information and Proposed Use of the Information—The National Highway Traffic Safety Administration (NHTSA) was established by the Highway Safety Act of 1970 (*23 U.S.C. 101*) to carry out a Congressional mandate to reduce the mounting number of deaths, injuries, and economic losses resulting from motor vehicle crashes on the Nation's highways. As part of this statutory mandate, NHTSA is authorized to conduct research as a foundation for the development of motor vehicle standards and traffic safety programs. In 2012, there were 21,667 occupants of passenger vehicles who died in motor vehicle traffic crashes. Of the occupants for whom restraint status was known, 52% were unrestrained at the time of the crash. Research shows that wearing a seatbelt or using a child safety seat can greatly reduce the chances of fatal or serious injury as a result of a motor vehicle collision. In fact, when used, seat belts reduce the risk of fatal injury to front-seat passenger occupants by 45% and to light truck occupants by 60%. Moreover, the nationwide daytime seat belt use rate was 87% in 2013, and ranged from 69% to 98% in the states and territories. Clearly there is work to be done to increase seat belt use and reduce unrestrained fatalities due to motor vehicle crashes. It is critical that NHTSA continually explore strategies to increase the use of seat belts among all occupants of motor vehicles.

High visibility enforcement (i.e., highly visible enforcement accompanied by public information supporting the enforcement) has been demonstrated to increase seat belt use. A successful high visibility enforcement program requires a written comprehensive plan with clear, well-defined goals, objectives, and performance measures; understanding of costs; funding; support from key stakeholders within the community; and aggressive law enforcement of laws. All of the above can only be accomplished with strong executive leadership.

A NHTSA-convened work group of law enforcement representatives from states with secondary seat belt laws, but exemplary work in support of occupant protection enforcement, identified strong leadership as the critical component in their successes. Strong leadership within any law enforcement agency can result in various practices and methodologies that spotlight a program's importance and help to make occupant protection, as well as other traffic safety issues, an integral part of the agencies' culture. Regardless of whether the occupant protection program is organized as a specialized unit or broadly integrated within the routine operations of the law enforcement agency, key management and enforcement roles must be clearly defined and assigned to specific individuals by the executive staff.

NHTSA is undertaking a study to implement a leadership model framework within three law enforcement agencies selected by NHTSA, evaluate the process and determine if the traffic safety outcome of interest is realized, specifically the impact on increased seat belt use and reduction in unrestrained fatalities. To accomplish this, NHTSA will provide technical assistance to three law enforcement demonstration communities for the implementation of leadership frameworks in support of safety initiatives, specifically occupant protection. Evaluation measures will involve the independent identification, collection and evaluation of both qualitative and quantitative data that specifically document changes in enforcement activity and its effects on the surrounding communities' behaviors. Overall findings will be provided to other law enforcement agencies to use as a resource for improving occupant protection enforcement programs and efforts.

Description of the Likely Respondents (Including Estimated Number, and Proposed Frequency of Response to the Collection of Information)—Under this proposed effort, a total of 108 interviews of law enforcement personnel will be conducted over two time periods. Eighteen interviews will be conducted in each of the three demonstration sites, once during the demonstration implementation and once at the end of the demonstration project. Ideally, the same respondents will be interviewed at both time periods; however, in the event that an individual leaves the law enforcement agency or is otherwise unavailable for an interview, NHTSA may replace the individual with another suitable interviewee.

NHTSA estimates that each interview will last 60–75 minutes. Interviewees will represent law enforcement leadership as well as line officers. Law enforcement leadership participants will include the top management in the agency (colonel, chief, etc.). Line officers will be recruited through a self-selection process or selected by the demonstration agencies. Responses will be collected via audio-recording and note taking during the interviews.

Throughout the project, the privacy of all participants will be protected. Personally-identifiable information (names, telephone numbers, email addresses, etc.) will be kept separate from the data collected, and will be stored in restricted folders on secure password-protected servers that are only accessible to study staff who have need to access such information. In addition, all data collected from participating officers will be reported in aggregate for each site, and respondent names will not be used in any reports resulting from this project. Rigorous de-identification procedures will be used during summary and feedback stages to ensure no officers will be identified through reconstructive means.

Estimate of the Total Annual Reporting and Record Keeping Burden Resulting from the Collection of Information—NHTSA estimates that the duration of each interview will be seventy-five (75) minutes, or a total of 135 hours for the 54 interview participants (18 interviewees × 3 sites × 2 administrations × 75 minutes). The participants will not incur any reporting cost from the information collection. The participants also will not incur any

record keeping burden or record keeping cost from the information collection.

Authority: 44 U.S.C. Section 3506(c)(2)(A)

Dated: June 25, 2014.

Jeff Michael,

Associate Administrator, Research and Program Development.

[FR Doc. 2014–15242 Filed 6–27–14; 8:45 am]

BILLING CODE 4910–59–P

DEPARTMENT OF TRANSPORTATION

National Highway Traffic Safety Administration

[Docket No. NHTSA–2014–0067]

Decision That Certain Nonconforming Motor Vehicles Are Eligible for Importation

AGENCY: National Highway Traffic Safety Administration, DOT.

ACTION: Grant of Petitions.

SUMMARY: This document announces decisions by NHTSA that certain motor vehicles not originally manufactured to comply with all applicable Federal Motor Vehicle Safety Standards (FMVSS) are eligible for importation into the United States because they are substantially similar to vehicles originally manufactured for sale in the United States and certified by their manufacturers as complying with the safety standards, and they are capable of being readily altered to conform to the standards or because they have safety features that comply with, or are capable of being altered to comply with, all applicable FMVSS.

DATES: These decisions became effective on the dates specified in Annex A.

ADDRESSES: For further information contact Mr. George Stevens, Office of Vehicle Safety Compliance, NHTSA (202–366–5308).

SUPPLEMENTARY INFORMATION:

Background

Under 49 U.S.C. 30141(a)(1)(A), a motor vehicle that was not originally manufactured to conform to all applicable FMVSS shall be refused admission into the United States unless NHTSA has decided that the motor vehicle is substantially similar to a motor vehicle originally manufactured for importation into and/or sale in the United States, certified under 49 U.S.C. 30115, and of the same model year as the model of the motor vehicle to be compared, and is capable of being readily altered to conform to all applicable FMVSS.

Where there is no substantially similar U.S.-certified motor vehicle, 49 U.S.C. 30141(a)(1)(B) permits a nonconforming motor vehicle to be admitted into the United States if its safety features comply with, or are capable of being altered to comply with, all applicable FMVSS based on destructive test data or such other evidence as NHTSA decides to be adequate.

Petitions for eligibility decisions may be submitted by either manufacturers or importers who have registered with NHTSA pursuant to 49 CFR Part 592. As specified in 49 CFR 593.7, NHTSA publishes notice in the **Federal Register** of each petition that it receives, and affords interested persons an opportunity to comment on the petition. At the close of the comment period, NHTSA decides, on the basis of the petition and any comments that it has received, whether the vehicle is eligible for importation. The agency then publishes this decision in the **Federal Register**.

NHTSA received petitions from registered importers to decide whether the vehicles listed in Annex A to this notice are eligible for importation into the United States. To afford an opportunity for public comment, NHTSA published notice of these petitions as specified in Annex A. The reader is referred to those notices for a thorough description of the petitions.

Comments: No substantive comments were received in response to the petitions identified in Appendix A.

NHTSA Decision: Accordingly, on the basis of the foregoing, NHTSA hereby decides that each motor vehicle listed in Annex A to this notice, which was not originally manufactured to comply with all applicable FMVSS, is either substantially similar to a motor vehicle manufactured for importation into and/or sale in the United States, and certified under 49 U.S.C. 30115, as specified in Annex A, and is capable of being readily altered to conform to all applicable FMVSS or has safety features that comply with, or are capable of being altered to comply with, all applicable Federal Motor Vehicle Safety Standards.

Vehicle Eligibility Number for Subject Vehicles: The importer of a vehicle admissible under any final decision must indicate on the form HS–7 accompanying entry the appropriate vehicle eligibility number indicating that the vehicle is eligible for entry. Vehicle eligibility numbers assigned to vehicles admissible under this decision are specified in Annex A.

Authority: 49 U.S.C. 30141(a)(1)(A), (a)(1)(B) and (b)(1); 49 CFR 593.7; delegations of authority at 49 CFR 1.95 and 501.8.

Jeffrey M. Giuseppe,

Acting Director, Office of Vehicle Safety Compliance.

Annex A—Nonconforming Motor Vehicles Decided To Be Eligible for Importation

1. Docket No. NHTSA–2013–0103

Nonconforming Vehicles: 1992 Jeep Wrangler Multipurpose Passenger Vehicles
Substantially Similar U.S. Certified Vehicles: 1992 Jeep Wrangler Multipurpose Passenger Vehicles
Notice of Petition Published at: 78 FR 65756 (November 1, 2013)
Vehicle Eligibility Number: VSP–562 (effective date December 16, 2013)

2. Docket No. NHTSA–2013–0104

Nonconforming Vehicles: 2011–2012 BMW S1000RR Motorcycles
Substantially Similar U.S.-Certified Vehicles: 2011–2012 BMW S1000RR Motorcycles
Notice of Petition Published at: 78 FR 65758 (November 1, 2013)
Vehicle Eligibility Number: VSP–563 (effective date December 16, 2013)

3. Docket No. NHTSA–2013–0106

Nonconforming Vehicles: 2011 Mitsubishi Outlander Multipurpose Passenger Vehicles (Manufactured for the Mexican market)
Substantially Similar U.S.-Certified Vehicles: 2011 Mitsubishi Outlander Multipurpose Passenger Vehicles
Notice of Petition Published at: 79 FR 16098 (March 24, 2014)
Vehicle Eligibility Number: VSP–564 (effective date May 9, 2014)

4. Docket No. NHTSA–2013–0036

Nonconforming Vehicles: 2012 AHLM SPT 16–25 Trailers
Because there are no substantially similar U.S.-certified version 2012 AHLM SPT 16–25 Trailers the petitioner sought import eligibility under 49 U.S.C. 30141(a)(1)(B).
Notice of Petition Published at: 78 FR 65759 (November 1, 2013)
Vehicle Eligibility Number: VCP–55 (effective date December 13, 2013)

5. Docket No. NHTSA–2013–0105

Nonconforming Vehicles: 1994 and 1997 Westfalia 14 ft Double Axle Cargo Trailers
Because there are no substantially similar U.S.-certified version 1994 and 1997 Westfalia 14 ft Double Axle Cargo Trailers the petitioner sought import eligibility under 49 U.S.C. 30141(a)(1)(B).

Notice of Petition Published at: 79 FR 182 (January 2, 2014)

Vehicle Eligibility Number: VCP–56 (effective date February 18, 2014)

6. Docket No. NHTSA–2013–0110

Nonconforming Vehicles: 2006–2013 Honda NT700V (Deauville) Motorcycles

Because there are no substantially similar U.S.-certified version 2006–2013 Honda NT700V (Deauville) Motorcycles the petitioner sought import eligibility under 49 U.S.C. 30141(a)(1)(B).

Notice of Petition Published at: 79 FR 2505 (January 14, 2014)

Vehicle Eligibility Number: VCP–57 (effective date February 24, 2014)

7. Docket No. NHTSA–2013–0063

Nonconforming Vehicles: 2001 PT Gemala Saranaupaya 1600 Double Axle Trailers

Because there are no substantially similar U.S.-certified version 2001 PT Gemala Saranaupaya 1600 Double Axle Trailers the petitioner sought import eligibility under 49 U.S.C. 30141(a)(1)(B).

Notice of Petition Published at: 79 FR 3470 (January 21, 2014)

Vehicle Eligibility Number: VCP–58 (effective date March 14, 2014)

8. Docket No. NHTSA–2014–0037

Nonconforming Vehicles: 2007–2010 Mercedes-Benz S Class Passenger Cars

Substantially Similar U.S.-Certified Vehicles: 2007–2010 Mercedes-Benz S Class Passenger Cars

Notice of Petition Published at: 79 FR 21833 (April 17, 2014)

Vehicle Eligibility Number: VSP–566 (effective date June 3, 2014)

9. Docket No. NHTSA–2014–0038

Nonconforming Vehicles: 2012 Mercedes-Benz S Class Passenger Cars

Substantially Similar U.S.-Certified Vehicles: 2012 Mercedes-Benz S Class Passenger Cars

Notice of Petition Published at: 79 FR 21835 (April 17, 2014)

Vehicle Eligibility Number: VSP–565 (effective date June 3, 2014)

[FR Doc. 2014–15210 Filed 6–27–14; 8:45 am]

BILLING CODE 4910–59–P

DEPARTMENT OF TRANSPORTATION

National Highway Traffic Safety Administration

[Docket No. NHTSA–2014–0046; Notice 1]

Chrysler Group, LLC, Receipt of Petition for Decision of Inconsequential Noncompliance

AGENCY: National Highway Traffic Safety Administration (NHTSA), Department of Transportation (DOT).

ACTION: Receipt of Petition.

SUMMARY: Chrysler Group, LLC, (Chrysler), a wholly owned subsidiary of Fiat S.p.A., has determined that certain model year (MY) 2014 Jeep Cherokee multipurpose passenger vehicles (MPV), and MY 2013–2014 Dodge Dart passenger cars (PC) do not fully comply with paragraph S5.2.1 of Federal Motor Vehicle Safety Standard (FMVSS) No. 101, *Controls and Displays* and paragraph S5.5.5 of FMVSS No. 135,[1] *Light Vehicle Brake Systems.* Chrysler has filed an appropriate report dated March 4, 2014 pursuant to 49 CFR part 573, *Defect and Noncompliance Responsibility and Reports.*

DATES: The closing date for comments on the petition is July 30, 2014.

ADDRESSES: Interested persons are invited to submit written data, views, and arguments on this petition. Comments must refer to the docket and notice number cited at the beginning of this notice and be submitted by any of the following methods:

- *Mail:* Send comments by mail addressed to: U.S. Department of Transportation, Docket Operations, M–30, West Building Ground Floor, Room W12–140, 1200 New Jersey Avenue SE., Washington, DC 20590.
- *Hand Deliver:* Deliver comments by hand to: U.S. Department of Transportation, Docket Operations, M–30, West Building Ground Floor, Room W12–140, 1200 New Jersey Avenue SE., Washington, DC 20590. The Docket Section is open on weekdays from 10 a.m. to 5 p.m. except Federal Holidays.
- *Electronically:* Submit comments electronically by: logging onto the Federal Docket Management System (FDMS) Web site at *http://www.regulations.gov/.* Follow the online instructions for submitting comments. Comments may also be faxed to (202) 493–2251.

Comments must be written in the English language, and be no greater than 15 pages in length, although there is no limit to the length of necessary attachments to the comments. If comments are submitted in hard copy form, please ensure that two copies are provided. If you wish to receive confirmation that your comments were received, please enclose a stamped, self-addressed postcard with the comments. Note that all comments received will be posted without change to *http://www.regulations.gov,* including any personal information provided.

Documents submitted to a docket may be viewed by anyone at the address and times given above. The documents may also be viewed on the Internet at *http://www.regulations.gov* by following the online instructions for accessing the dockets. DOT's complete Privacy Act Statement is available for review in the **Federal Register** published on April 11, 2000, (65 FR 19477–78).

The petition, supporting materials, and all comments received before the close of business on the closing date indicated below will be filed and will be considered. All comments and supporting materials received after the closing date will also be filed and will be considered to the extent possible. When the petition is granted or denied, notice of the decision will be published in the **Federal Register** pursuant to the authority indicated below.

SUPPLEMENTARY INFORMATION:

I. *Chrysler's Petition:* Pursuant to 49 U.S.C. 30118(d) and 30120(h) (see implementing rule at 49 CFR part 556), Chrysler submitted a petition for an exemption from the notification and remedy requirements of 49 U.S.C. Chapter 301 on the basis that this noncompliance is inconsequential to motor vehicle safety.

This notice of receipt of Chrysler's petition is published under 49 U.S.C. 30118 and 30120 and does not represent any agency decision or other exercise of judgment concerning the merits of the petition.

II. *Vehicles Involved:* Affected are approximately 411 MY 2014 Jeep Cherokee MPV manufactured between June 17, 2013 and January 14, 2014 and 22 MY 2013–2014 Dodge Dart PC manufactured between July 1, 2012 and December 13, 2013.

III. *Noncompliance:* Chrysler explains that the noncompliance is that the telltale used for Brake Warning and Park Brake Warning is displayed using International Organization for Standardization (ISO) symbols instead of the telltale symbol required by S5.2.1 of FMVSS No. 101 and paragraph S5.5.5 of FMVSS No. 135.

[1] Subsequent to receiving Chrysler's petition, NHTSA was notified by the petitioner that it had inadvertently referred to FMVSS No. 105, a standard that does not apply to the subject vehicles, in its petition.

IV. *Rule Text:* Paragraph S5.2.1 of FMVSS No. 101 requires in pertinent part:

S5.2.1 Except for the Low Tire Pressure Telltale, each control, telltale and indicator that is listed in column 1 of Table 1 or Table 2 must be identified by the symbol specified for it in column 2 or the word or abbreviation specified for it in column 3 of Table 1 or Table 2. If a symbol is used, each symbol provided pursuant to this paragraph must be substantially similar in form to the symbol as it appears in Table 1 or Table 2. If a symbol is used, each symbol provided pursuant to this paragraph must have the proportional dimensional characteristics of the symbol as it appears in Table 1 or Table 2.

Paragraph S5.5.5 of FMVSS No. 135 requires in pertinent part:

S5.5.5. Labeling. (a) Each visual indicator shall display a word or words in accordance with the requirements of Standard No. 101 (49 CFR 571.101) and this section, which shall be legible to the driver under all daytime and nighttime conditions when activated. Unless otherwise specified, the words shall have letters not less than 3.2 mm (⅛ inch) high and the letters and background shall be of contrasting colors, one of which is red. Words or symbols in addition to those required by Standard No. 101 and this section may be provided for purposes of clarity.

(b) Vehicles manufactured with a split service brake system may use a common brake warning indicator to indicate two or more of the functions described in S5.5.1(a) through S5.5.1(g). If a common indicator is used, it shall display the word ''Brake.'' . . .

V. *Summary of Chrysler's Analyses:* Chrysler stated its belief that the subject noncompliance is inconsequential to motor vehicle safety for the following reasons:

1. Chrysler notes that the purpose of the brake telltale is to warn the operator about either one of two conditions: (1) The parking brake is applied or is malfunctioning; or (2) the service brakes may be malfunctioning. The affected vehicles ''brake display telltale'' illuminates in red as required and, except for the missing identifier word ''Brake,'' the vehicles comply with all other applicable FMVSS requirements. When the telltale is not illuminated, there is no degradation of brake performance. All braking system functionality, including service brakes and the parking brake is unaffected by this noncompliance and the subject vehicles will operate as intended. Even though the word ''Brake'' is not used, Chrysler's stated its belief that in the event one of the affected vehicles displayed the red-color ISO brake telltale, the driver would recognize a possible brake system malfunction.

2. Chrysler states that the telltale functions as both the vehicle's brake system symbol and the parking brake symbol. In the Dart, the parking brake is engaged by pulling up on the parking brake handle in view of the instrument cluster where the brake telltale is illuminated. In the Cherokee, the parking brake is electronic where a 5 second ''Parking Brake Engaged'' message is displayed in the Electronic Vehicle Information Center (EVIC) and the brake telltale is illuminated in the instrument cluster. The brake telltale also illuminates during the cluster warning lamp function check. Due to the ISO telltale illumination during parking brake engagement and during lamp function checks, an operator is conditioned to associate the telltale with the braking system and would be alerted in the event of a possible brake system malfunction. In the unlikely event the ISO brake telltale is illuminated and the operator does not understand its meaning, the ISO brake telltale graphic is shown and described in the Owner's Manual for both vehicles. Thus, an operator could easily determine that the ISO telltale relates to the brake system.

3. Chrysler also believes that in the subject vehicles, in the event the brake fluid level is less than the recommended level, the brake telltale is illuminated and the EVIC will display a five second ''Brake Fluid Low'' message that continues until the condition is corrected. This additional visual input to the operator helps facilitate the association of the telltale with the braking system.

4. Chrysler has stated its belief that NHTSA has previously granted a similar inconsequential noncompliance petition regarding the use of ISO symbols.

5. Chrysler is not aware of any warranty claims, field reports, consumer complaints, legal claims or any incidents or injuries related to the subject noncompliance.

Chrysler has additionally informed NHTSA that it has corrected the noncompliance so that all future production vehicles will comply with FMVSS No. 101 and FMVSS No. 135.

In summation, Chrysler believes that the described noncompliance of the subject vehicles is inconsequential to motor vehicle safety, and that its petition, to exempt Chrysler from providing recall notification of noncompliance as required by 49 U.S.C. 30118 and remedying the recall noncompliance as required by 49 U.S.C. 30120 should be granted.

NHTSA notes that the statutory provisions (49 U.S.C. 30118(d) and 30120(h)) that permit manufacturers to file petitions for a determination of inconsequentiality allow NHTSA to exempt manufacturers only from the duties found in sections 30118 and 30120, respectively, to notify owners, purchasers, and dealers of a defect or noncompliance and to remedy the defect or noncompliance. Therefore, any decision on this petition only applies to the subject vehicles that Chrysler no longer controlled at the time it determined that the noncompliance existed. However, any decision on this petition does not relieve Chrysler distributors and dealers of the prohibitions on the sale, offer for sale, or introduction or delivery for introduction into interstate commerce of the noncompliant motor vehicles under their control after Chrysler notified them that the subject noncompliance existed.

Authority: (49 U.S.C. 30118, 30120: delegations of authority at 49 CFR 1.95 and 501.8).

Jeffrey M. Giuseppe,

Acting Director, Office of Vehicle Safety Compliance.

[FR Doc. 2014–15211 Filed 6–27–14; 8:45 am]

BILLING CODE 4910–59–P

DEPARTMENT OF THE TREASURY

Submission for OMB Review; Comment Request

June 24, 2014.

The Department of the Treasury will submit the following information collection requests to the Office of Management and Budget (OMB) for review and clearance in accordance with the Paperwork Reduction Act of 1995, Public Law 104–13, on or after the date of publication of this notice.

DATES: Comments should be received on or before July 30, 2014 to be assured of consideration.

ADDRESSES: Send comments regarding the burden estimate, or any other aspect of the information collection, including suggestions for reducing the burden, to (1) Office of Information and Regulatory Affairs, Office of Management and Budget, Attention: Desk Officer for Treasury, New Executive Office Building, Room 10235, Washington, DC 20503, or email at *OIRA_Submission@OMB.EOP.gov* and (2) Treasury PRA Clearance Officer, 1750 Pennsylvania Ave. NW., Suite 8141, Washington, DC 20220, or email at *PRA@treasury.gov.*

FOR FURTHER INFORMATION CONTACT: Copies of the submission(s) may be obtained by emailing *PRA@treasury.gov,* calling (202) 622–1295, or viewing the entire information collection request at *www.reginfo.gov.*

Internal Revenue Service (IRS)

OMB Number: 1545–1201.

Type of Review: Revision of a currently approved collection.

Title: Election to Expense Certain Depreciable Business Assets.

Abstract: The regulations provide rules on the election described in Internal Revenue Code section 179(b)(4); the apportionment of the dollar limitation among component members of a controlled group; and the proper order for deducting the carryover of disallowed deduction. The recordkeeping and reporting requirements are necessary to monitor compliance with the section 179 rules.

Affected Public: Individuals or households; Farms; Businesses or other for-profits.

Estimated Annual Burden Hours: 3,015,000.

OMB Number: 1545–1677.

Type of Review: Extension without change of a currently approved collection.

Title: Exclusions From Gross Income of Foreign Corporations.

Abstract: TD 9502 contains rules implementing the portions of section 883(a) and (c) of the Internal Revenue Code that relate to income derived by foreign corporations from the international operation of a ship or ships or aircraft. The rules provide, in general, that a foreign corporation organized in a qualified foreign country and engaged in the international operation of ships or aircraft shall exclude qualified income from gross income for purposes of United States Federal income taxation, provided that the corporation can satisfy certain ownership and related documentation requirements.

Affected Public: Individuals or households; Businesses or other for-profits; and Not-for-profit institutions.

Estimated Annual Burden Hours: 23,900.

OMB Number: 1545–2197.

Type of Review: Revision of a currently approved collection.

Title: Form 1097–BTC, Bond Tax Credit.

Form: Form 1097–BTC.

Abstract: Bond tax credits distributed by holders and issuers of tax credit bonds will be reported on this form. The form will be sent to taxpayers that received the distribution.

Affected Public: Businesses or other for-profits; Not-for-profit institutions.

Estimated Annual Burden Hours: 67.

OMB Number: 1545–2206.

Type of Review: Revision of a currently approved collection.

Title: Reinstatement and Retroactive Reinstatement for Reasonable Cause (Rev. Proc. 2014–11) and Transitional Relief for Small Organizations (Notice 2011–43) under IRC § 6033(j).

Abstract: This revenue procedure provides procedures for reinstating the tax-exempt status of organizations that have had their tax-exempt status automatically revoked under section 6033(j) of the Internal Revenue Code for failure to file required annual returns or notices for three consecutive years. The revenue procedure prescribes certain circumstances under which an organization can have its tax-exempt status retroactively reinstated to the date of revocation. Notice 2011–44 is modified and superseded. Notice 2011–43 provides transitional relief for certain small organizations that have lost their tax-exempt status because they failed to file a required annual electronic notice (Form 990–N e-Postcard) for taxable years beginning in 2007, 2008 and 2009.

Affected Public: Not-for-profit institutions.

Estimated Annual Burden Hours: 6,206.

Brenda Simms,

Treasury PRA Clearance Officer.

[FR Doc. 2014–15157 Filed 6–27–14; 8:45 am]

BILLING CODE 4830–01–P

DEPARTMENT OF THE TREASURY

Submission for OMB Review; Comment Request

June 24, 2014.

The Department of the Treasury will submit the following information collection requests to the Office of Management and Budget (OMB) for review and clearance in accordance with the Paperwork Reduction Act of 1995, Public Law 104–13, on or after the date of publication of this notice.

DATES: Comments should be received on or before July 30, 2014 to be assured of consideration.

ADDRESSES: Send comments regarding the burden estimate, or any other aspect of the information collection, including suggestions for reducing the burden, to (1) Office of Information and Regulatory Affairs, Office of Management and Budget, Attention: Desk Officer for Treasury, New Executive Office Building, Room 10235, Washington, DC 20503, or email at *OIRA_Submission@OMB.EOP.gov* and (2) Treasury PRA Clearance Officer, 1750 Pennsylvania Ave. NW., Suite 8141, Washington, DC 20220, or email at *PRA@treasury.gov.*

FOR FURTHER INFORMATION CONTACT: Copies of the submission(s) may be obtained by emailing *PRA@treasury.gov,* calling (202) 622–1295, or viewing the entire information collection request at *www.reginfo.gov.*

Alcohol and Tobacco Tax and Trade Bureau (TTB)

OMB Number: 1513–0017.

Type of Review: Extension without change of a currently approved collection.

Title: Drawback on Beer Exported.

Form: TTB F 5130.6.

Abstract: When taxpaid beer is removed from a brewery and ultimately exported, the brewer exporting the beer is eligible for a drawback (refund) of the Federal excise taxes paid. By completing form TTB F 5130.6 and submitting documentation of exportation, the brewer may receive a refund of the taxes paid.

Affected Public: Businesses or other for-profit organizations.

Estimated Annual Burden Hours: 5,000.

OMB Number: 1513–0032.

Type of Review: Revision of a currently approved collection.

Title: Inventory—Manufacturer of Tobacco Products or Processed Tobacco.

Form: TTB F 5210.9.

Abstract: TTB F 5210.9 is used by manufacturers of tobacco products or processed tobacco to report the beginning and ending inventories of tobacco products and processed tobacco and at other times required by the TTB regulations. The information reported on this form is used by TTB to determine tax liability and compliance with regulations, and for protection of the revenue.

Affected Public: Businesses or other for-profit organizations.

Estimated Annual Burden Hours: 500.

OMB Number: 1513–0033.

Type of Review: Revision of a currently approved collection.

Title: Report—Manufacturer of Tobacco Products or Cigarette Papers and Tubes; Report—Manufacturer of Processed Tobacco.

Form: TTB F 5210.5, TTB F 5250.1.

Abstract: Manufacturers of tobacco products and cigarette papers and tubes use the TTB F 5210.5 to report on the taxable articles manufactured, received, and removed per month. Manufacturers of processed tobacco use TTB F 5250.1 to account for all processed tobacco manufactured, received, and removed per month. TTB uses this information to ensure that Federal excise taxes have been properly paid and that manufacturers have complied with applicable Federal laws and regulations.

Affected Public: Businesses or other for-profit organizations.

Estimated Annual Burden Hours: 6,000.

OMB Number: 1513–0034.

Type of Review: Revision of a currently approved collection.

Title: Schedule of Tobacco Products, Cigarette Papers, or Tubes Withdrawn from the Market.

Form: TTB F 5200.7.

Abstract: TTB F 5200.7 is used by persons who intend to withdraw tobacco products from the market and file a claim for credit, refund, or abatement of tax on those products for which Federal excise taxes have already been paid or determined. The industry member uses this form to describe the products that are to be withdrawn from the market. Through the use of this form, the industry member notifies TTB when a withdrawal or destruction is to take place, and TTB may elect to supervise the withdrawal or destruction.

Affected Public: Businesses or other for-profit organizations.

Estimated Annual Burden Hours: 2,250.

OMB Number: 1513–0062.

Type of Review: Extension without change of a currently approved collection.

Title: Usual and Customary Business Records Relating to Denatured Spirits—TTB REC 5150/1.

Abstract: Denatured spirits are used for nonbeverage industrial purposes in the manufacture of personal and household products. These records are maintained at the premises of the regulated individual and are routinely inspected by TTB personnel during field tax compliance examinations. These examinations are necessary to verify that all specially denatured spirits can be accounted for and are being used only for purposes authorized by laws and regulations. By ensuring that spirits have not been diverted to beverage use, tax revenue and public safety are protected. No additional recordkeeping is imposed on the respondent, as this information collection requires the maintenance only of the usual and customary business records of the regulated individual.

Affected Public: Businesses or other for-profit organizations; State, local, and tribal governments.

Estimated Annual Burden Hours: 1.

OMB Number: 1513–0113.

Type of Review: Extension without change of a currently approved collection.

Title: Special Tax ''Renewal'' Registration and Return/Special Tax Location Registration Listing.

Form: TTB F 5630.5R.

Abstract: Chapter 52 of the Internal Revenue Code of 1986, as amended (IRC), imposes an occupational tax on persons engaging in certain tobacco businesses. Section 5731 of the IRC (26 U.S.C. 5731) requires persons to register and/or pay a special occupational tax before conducting business in certain tobacco categories. TTB F 5630.5R is used both to compute and report the tax and as an application for registry as required by statute. TTB F 5630.5R is computer-generated by TTB with known taxpayer identifying information (e.g., name, trade name, address, employer identification number, etc.) along with tax computations reflecting tax class(es), number of business locations, tax rate(s), and total tax due. The taxpayer corrects or supplies any inaccurate or incomplete information.

Affected Public: Businesses or other for-profit organizations.

Estimated Annual Burden Hours: 100.

OMB Number: 1513–0130.

Type of Review: Revision of a currently approved collection.

Title: Report of Removal, Transfer, or Sale of Processed Tobacco.

Form: TTB F 5250.2.

Abstract: Unregulated transfers or sales of processed tobacco to persons who do not hold TTB permits could lead to processed tobacco falling into the hands of persons who would be unknown and unaccountable to TTB, including illegal manufacturers. In order to better regulate processed tobacco and prevent diversion, TTB requires the filing of a report, TTB F 5250.2, covering all such transfers or sales. This report is used to protect the revenue.

Affected Public: Businesses or other for-profit organizations.

Estimated Annual Burden Hours: 2,400.

Brenda Simms,

Treasury PRA Clearance Officer.

[FR Doc. 2014–15134 Filed 6–27–14; 8:45 am]

BILLING CODE 4810–31–P

DEPARTMENT OF THE TREASURY

Departmental Offices

Proposed Collection; Comment Request

ACTION: Notice and request for comments.

SUMMARY: The Department of the Treasury, as part of its continuing effort to reduce paperwork burdens, invites the general public and other Federal agencies to comment on revisions in 2014 of a currently approved information collection that is proposed for approval by the Office of Management and Budget. The Office of International Affairs within the Department of the Treasury is soliciting comments concerning the revision of the Treasury International Capital (TIC) Form SHC/SHCA.

DATES: Written comments should be received on or before August 29, 2014 to be assured of consideration.

ADDRESSES: Direct all written comments to Dwight Wolkow, International Portfolio Investment Data Systems, Department of the Treasury, Room 5422 MT, 1500 Pennsylvania Avenue NW., Washington, DC 20220. In view of possible delays in mail delivery, you may also wish to send a copy to Mr. Wolkow by email (*comments2TIC@do.treas.gov*) or FAX (202–622–2009). Mr. Wolkow can also be reached by telephone (202–622–1276).

FOR FURTHER INFORMATION CONTACT: Copies of the proposed form and instructions are available at Part II of the Treasury International Capital (TIC) Forms Web page ''Forms SHL/SHLA & SHC/SHCA'', at: *http://www.treasury.gov/resource-center/data-chart-center/tic/Pages/forms-sh.aspx#shc*. Requests for additional information should be directed to Mr. Wolkow.

SUPPLEMENTARY INFORMATION:

Title: Treasury International Capital (TIC) Form SHC/SHCA ''U.S. Ownership of Foreign Securities, including Selected Money Market Instruments.''

OMB Control Number: 1505–0146.

Abstract: Form SHC/SHCA is used to conduct annual surveys of U.S. residents' ownership of foreign securities for portfolio investment purposes. These data are used by the U.S. Government in the formulation of international financial and monetary policies, and for the computation of the U.S. balance of payments accounts and of the U.S. international investment position. These data are also used to provide information to the public and to meet international reporting commitments. The SHC/SHCA survey is part of an internationally coordinated effort under the auspices of the International Monetary Fund to improve data on securities worldwide. Most of the major industrial and financial countries conduct similar surveys.

The data collection includes large benchmark surveys conducted every five years, and smaller annual surveys conducted in the non-benchmark years. The data collected under an annual survey are used in conjunction with the results of the preceding benchmark survey to make economy-wide estimates for that non-benchmark year. Currently, the determination of who must report in the annual surveys is based primarily on

the data submitted during the preceding benchmark survey. The data requested in the annual survey will generally be the same as requested in the preceding benchmark report. Form SHC is used for the benchmark survey of all significant U.S.-resident custodians and end-investors regarding U.S. ownership of foreign securities. In non-benchmark years Form SHCA is used for the annual surveys of primarily the very largest U.S.-resident custodians and end-investors.

Current Actions: The proposed changes will: (1) Modify the determination of who must report on the annual surveys to include consideration of those filing the monthly TIC Form SLT report; (2) streamline Form SHC/SHCA to provide consistency among the annual surveys and the TIC SLT (details of the changes follow below); and (3) update and clarify the instructions, including updating how to submit reports and the line-by-line instructions. The changes will improve overall survey reporting.

The remainder of the Current Actions section shows in more detail the proposed changes to streamline Form SHC/SHCA, organized by schedule:

The following changes apply to Schedule 1: Reporter Contact Information and Summary of Financial Information:

a. Minor changes in wording concerning the reporter's identification number, name, and contacts.

b. Lines that previously lacked numbers now have them, resulting in renumbering of subsequent lines.

c. In ''Reporter Type'', ''Banks'' is replaced with ''Depository Institution'', ''Mutual fund or investment trust'' is replaced with ''Fund/Fund Manager/Sponsor (excluding pension fund)'', and ''Other Financial Organization'' is specified to include ''BHCs (Bank Holding Companies) and FHCs (Financial Holding Companies).''

d. The line for a contact fax number is eliminated.

e. ''Industrial Classification Code'' is replaced with ''Reporter Type''.

The following changes apply to Schedule 2: Details of Securities:

a. Minor changes in wording throughout to remove instruction comments.

b. Lines are renumbered.

c. The line for ''Security ID System'' is now consistent across Forms SHC/SHCA and SHL/SHLA. The new categories are: 1 = CUSIP, 2 = ISIN, 3 = CINS, 4 = Common Code, 5 = SEDOL, 6 = Internally Generated, and 7 = Other.

d. ''Face Value in Currency of Denomination'' for non-asset-backed securities and ''Remaining Principal Outstanding in Currency of Denomination'' for asset-backed securities are replaced by ''Face Value or Remaining Principal Outstanding in the Currency of Denomination'' for all debt securities.

e. The separate ''Issue Date'' and ''Maturity Date'' for non-Asset-Backed Securities and Asset-Backed Securities are replaced by ''Issue Date'' and ''Maturity Date'' for all debt securities.

f. The ''Term Indicator'' line is eliminated.

g. The ''Intentionally Left Blank'' lines are eliminated.

h. ''Market value'' is replaced by ''Fair value''

i. A new item requires reporters to specify whether they are reporting the security as ''End-investors'' or ''Custodians''.

j. ''Security Type'' is now consistent with Form SHL/SHLA. ''Unstripped bond or note and all other asset-backed debt'' is replaced by security types ''Bond or note, unstripped'', ''Bond or note, stripped'', and ''All other debt''. ''Zero-coupon & stripped security'' is replaced by ''''Zero-coupon bond or note''.

k. ''Ownership Code'' is replaced with ''Type of U.S. Owner''. A new, more precise system of categories replaces the old categories. The new categories are: 1 = Depository Institution; 2 = Fund or Other Investment Vehicle (excluding pension and mutual funds); 3 = Pension Fund; 4 = Mutual Fund, 5 = Insurance Company; 6 = Other Financial Organization (including BHC and FHC); 7 = Nonfinancial Organization.

l. ''Type of Foreign Issuer'' is added to identify if the security is issued by ''Foreign Official Institutions'' or ''All Other Foreigners''.

The following changes apply to Schedule 3: Custodians Used:

a. Minor changes in wording throughout to remove instruction comments.

Type of Review: Revision of currently approved data collection.

Affected Public: Business/Financial Institutions.

Form: TIC SHC/SHCA, Schedules 1, 2 and 3 (1505–0146).

Estimated Number of Respondents: An annual average (over five years) of 341, but this varies widely from about 955 in benchmark years (once every five years) to about 190 in other years (four out of every five years).

Estimated Average Time per Respondent: An annual average (over five years) of about 169 hours, but this will vary widely from respondent to respondent. (a) In the year of a benchmark survey, which is conducted once every five years, it is estimated that exempt respondents will require an average of 17 hours; custodians of securities providing security-by-security information will require an average of 361 hours, but this figure will vary widely for individual custodians; end-investors providing security-by-security information will require an average of 121 hours; and end-investors and custodians employing U.S. custodians will require an average of 41 hours. (b) In a non-benchmark year, which occurs four years out of every five years: Custodians of securities providing security-by-security information will require an average of 546 hours (because only the largest U.S.-resident custodians will report), but this figure will vary widely for individual custodians; end-investors providing security-by-security information will require an average of 146 hours; and reporters entrusting their foreign securities to U.S. custodians will require an average of 49 hours. The exemption level, which applies only in benchmark years, for custodians is the holding of less than $100 million in foreign securities and for end-investors the owning of less than $100 million in foreign securities with a single custodian.

Estimated Total Annual Burden Hours: An annual average (over five years) of 57,630 hours.

Frequency of Response: Annual.

Request For Comments: Comments submitted in response to this notice will be summarized and/or included in the request for Office of Management and Budget approval. All comments will become a matter of public record. The public is invited to submit written comments concerning: (a) Whether the Survey is necessary for the proper performance of the functions of the Office of International Affairs within the Department of the Treasury, including whether the information collected will have practical uses; (b) the accuracy of the above estimate of the burdens; (c) ways to enhance the quality, usefulness and clarity of the information to be collected; (d) ways to minimize the reporting and/or record keeping burdens on respondents, including the use of information technologies to automate the collection of the data requested; and (e) estimates of capital or start-up costs of operation, maintenance and purchase of services to provide the information requested.

Dwight Wolkow,

Administrator, International Portfolio Investment Data Systems.

[FR Doc. 2014–15233 Filed 6–27–14; 8:45 am]

BILLING CODE 4810–25–P

DEPARTMENT OF THE TREASURY

Public Input on Development of Responsible Private Label Securities (PLS) Market

AGENCY: Office of the Undersecretary for Domestic Finance, Department of the Treasury.

ACTION: Notice and Request for Information.

SUMMARY: Consistent with the Obama Administration's commitment to openness and transparency and the President's Open Government Initiative, the Department of the Treasury (Treasury) is seeking public input on the

private sector development of a well-functioning, responsible private label securities (PLS) market.

DATES: *Comment Due Date:* August 8, 2014.

ADDRESSES: Interested persons are invited to submit comments regarding this notice according to the instructions for ''Electronic Submission of Comments'' below. All submissions must refer to this document. Treasury encourages the early submission of comments.

Electronic Submission of Comments. Interested persons must submit comments electronically through the Federal eRulemaking Portal at *http://www.regulations.gov.* Electronic submission of comments allows the commenter maximum time to prepare and submit a comment, ensures timely receipt, and enables Treasury to make them available to the public. Comments submitted electronically through the *http://www.regulations.gov* Web site can be viewed by other commenters and interested members of the public. Commenters should follow the instructions provided on that site to submit comments electronically.

Note: To receive consideration as public comments, comments must be submitted through the method specified above.

No Facsimile Comments. Facsimile (FAX) comments will not be accepted.

Public Inspection of Public Comments. In general, all properly submitted comments will be available for inspection and downloading at *http://www.regulations.gov.*

Additional Instructions. Please note the number of the question to which you are responding at the top of each response. Though the responses will be screened for appropriateness, in general comments received, including attachments and other supporting materials, are part of the public record and are immediately available to the public. Do not enclose any information in your comment or supporting materials that you consider confidential or inappropriate for public disclosure.

FOR FURTHER INFORMATION CONTACT: For general inquiries, submission process questions or any additional information, please call 202–622–2108. All responses to this Notice and Request for Information should be submitted via *http://www.regulations.gov* to ensure consideration.

SUPPLEMENTARY INFORMATION: Treasury is seeking public comment on the following questions:

1. What is the appropriate role for new issue PLS in the current and future housing finance system? What is the appropriate interaction between the guaranteed and non-guaranteed market segments? Are there particular segments of the mortgage market where PLS can or should be most active and competitive in providing a channel for funding mortgage credit?

▪ *Comments could address: The role of the government in the mortgage market; access to mortgage credit; cost of mortgage finance; capital available for this type of investment; the source of loans for securitization; product and structure innovation; types of mortgage products; and borrower characteristics.*

2. What are the key obstacles to the growth of the PLS market? How would you address these obstacles? What are the existing market failures? What are necessary conditions for securitizers and investors to return at scale?

▪ *Comments could address: Structural, operational, economic, regulatory, loan level data, other disclosures, and legal challenges.*

▪ *Challenges may include methods of investor protections; desire for standardization; secondary market liquidity and size; underwriting standards; origination volumes; servicing practices; credit ratings; and risks arising from borrower default.*

3. How should new issue PLS support safe and sound market practices?

▪ *Comments could address: Underwriting standards; transparency and disclosure requirements; borrower protections; alignment of interests; and regulatory oversight.*

4. What are the costs and benefits of various methods of investor protection? In particular, please address the costs and benefits of requiring the trustee to have a fiduciary duty to investors or requiring an independent collateral manager to oversee issuances.

▪ *Comments could address: Willingness of parties to accept a fiduciary duty; capital requirements and sufficiency; fiduciary duty as a means of addressing conflicts of interest; and alternative methods of investor protection.*

5. What is the appropriate or necessary role for private industry participants to address the factors cited in your answer to Question #2? What can private market participants undertake either as part of industry groups or independently?

▪ *Comments could address: Methods of achieving agreement around establishment of industry-wide standards; or development and adoption of a limited number of structural options from which securitizers can choose.*

6. What is the appropriate or necessary role for government in addressing the key factors cited in your answer to Question #2? What actions could government agencies take? Are there actions that require legislation?

▪ *Comments could address: Suggested role in facilitating resolution of issues impeding the return of an active PLS market; actions that are required from government agencies; and actions that require legislation.*

7. What are the current pricing characteristics of PLS issuance (both on a standalone basis and relative to other mortgage finance channels)? How might the pricing characteristics change should key challenges be addressed? What is the current and potential demand from investors should key challenges be addressed?

▪ *Comments could address: Amount and sources of demand for new issue PLS; cost of funding and capital; appropriate parties or processes to address the current pricing of PLS issuance; pricing in other mortgage financing channels.*

8. Why have we seen strong issuance and investor demand for other types of asset-backed securitizations (e.g., securitizations of commercial real estate, leveraged loans, and auto loans) but not residential mortgages? Do these or other asset classes offer insights that can help inform the development of market practices and standards in the new issue PLS market?

▪ *Comments could address: Relevant terms, standards, and covenants; key differences in underlying assets; comparisons of structural features; documentation; alignment of interests; relative value, relative risks, and required returns; and examples of other asset classes' emergence and growth over time.*

9. Is there any additional information regarding the PLS market not already addressed that you would like to provide?

David G. Clunie,

Executive Secretary, Department of the Treasury.

[FR Doc. 2014–15355 Filed 6–27–14; 8:45 am]

BILLING CODE P

DEPARTMENT OF THE TREASURY

Office of the Comptroller of the Currency

[Docket ID OCC–2014–0018]

Mutual Savings Association Advisory Committee

AGENCY: Office of the Comptroller of the Currency, Department of the Treasury.

ACTION: Notice of Federal Advisory Committee Meeting.

SUMMARY: The Office of the Comptroller of the Currency (OCC) announces a meeting of the Mutual Savings Association Advisory Committee (MSAAC).

DATES: A public meeting of the MSAAC will be held on Wednesday, July 23, 2014, beginning at 1:00 p.m. Eastern Daylight Time (EDT). Members of the public may submit written statements to the MSAAC. The OCC must receive written statements no later than Thursday, July 17, 2014. Members of the public who plan to attend the meeting, and members of the public who require auxiliary aid, should contact the OCC by 5:00 p.m. EDT on Friday, July 18, 2014, to inform the OCC of their desire to attend the meeting and to provide the information that will be required to facilitate aid.

ADDRESSES: The OCC will hold the July 23, 2014, meeting of the MSAAC at the OCC's offices at 400 7th Street SW., Washington, DC 20219. Members of the public may submit written statements to *MSAAC@occ.treas.gov* or by mailing them to Donna Deale, Designated Federal Official, Office of the Comptroller of the Currency, 400 7th Street SW., Washington, DC 20219. Members of the public who plan to attend the meeting should contact the OCC at *MSAAC@occ.treas.gov* or at 202–649–5420 to inform the OCC of their desire to attend the meeting so that the OCC can make the necessary arrangements for seating. Attendees should provide their full name, email address, and organization.

FOR FURTHER INFORMATION CONTACT: Donna Deale, Deputy Comptroller for Thrift Supervision, (202) 649–5420, Office of the Comptroller of the Currency, Washington, DC 20219.

SUPPLEMENTARY INFORMATION: By this notice, the OCC is announcing that the MSAAC will convene a meeting on Wednesday, July 23, 2014, at the OCC's offices at 400 7th Street SW., Washington, DC 20219. The meeting is open to the public and will begin at 1:00 p.m. EDT. The purpose of the meeting is for the MSAAC to advise the OCC on the regulatory changes or other steps the OCC may be able to take to ensure the continued health and viability of mutual savings associations and other issues of concern to the existing mutual savings associations. The agenda includes a discussion of current topics of interest to the industry, including an update from OCC staff on current portfolio statistics, financial metrics and supervisory data on federal mutual savings associations.

Dated: June 24, 2014.

Thomas J. Curry,

Comptroller of the Currency.

[FR Doc. 2014–15170 Filed 6–27–14; 8:45 am]

BILLING CODE 4810–33–P

DEPARTMENT OF THE TREASURY

Internal Revenue Service

Proposed Collection; Comment Request for Form 8621

AGENCY: Internal Revenue Service (IRS), Treasury.

ACTION: Notice and request for comments.

SUMMARY: The Department of the Treasury, as part of its continuing effort to reduce paperwork and respondent burden, invites the general public and other Federal agencies to take this opportunity to comment on proposed and/or continuing information collections, as required by the Paperwork Reduction Act. Currently, the IRS is soliciting comments concerning Form 8621, Return by a Shareholder of a Passive Foreign Investment Company or Qualified Electing Fund.

DATES: Written comments should be received on or before August 29, 2014 to be assured of consideration.

ADDRESSES: Direct all written comments to R. Joseph Durbala, Internal Revenue Service, Room 6129, 1111 Constitution Avenue NW., Washington, DC 20224.

FOR FURTHER INFORMATION CONTACT: Requests for additional information or copies of the form and instructions should be directed to Sara Covington, Internal Revenue Service, Room 6129, 1111 Constitution Avenue NW., Washington, DC 20224, or through the Internet at *Sara.L.Covington@irs.gov.*

SUPPLEMENTARY INFORMATION:

Title: Return by a Shareholder of a Passive Foreign Investment Company or Qualified Electing Fund.

OMB Number: 1545–1002.

Form Number: 8621.

Abstract: Form 8621 is filed by a U.S. shareholder who owns stock in a foreign investment company. The form is used to report income, make an election to extend the time for payment of tax, and to pay an additional tax and interest amount. The IRS uses Form 8621 to determine if these shareholders have correctly reported amounts of income, made the election correctly, and have correctly computed the additional tax and interest amount.

Current Actions: Changes have been made to the form to comply with regulations. The general authority under section 1298(f), we added a new line on page 1 (in the identifying information section above Part I). Also, we added new Part I (''Summary of Annual Information'') to reflect the new annual filing requirement of section 1298(f), section 521, and the requirements set forth in regulations section 1.1298–4T. As a result of this addition, we renumbered all of the subsequent Parts and all of the subsequent line numbers. All of the line numbers are now consecutively numbered.

Type of Review: Revision of a currently approved collection.

Affected Public: Businesses or other for-profit organizations and individuals.

Estimated Number of Respondents: 1,333.

Estimated Time Per Respondent: 40 hr. 56 min.

Estimated Total Annual Burden Hours: 54,574.

The following paragraph applies to all of the collections of information covered by this notice:

An agency may not conduct or sponsor, and a person is not required to respond to, a collection of information unless the collection of information displays a valid OMB control number. Books or records relating to a collection of information must be retained as long as their contents may become material in the administration of any internal revenue law. Generally, tax returns and tax return information are confidential, as required by 26 U.S.C. 6103.

Request for Comments: Comments submitted in response to this notice will be summarized and/or included in the request for OMB approval. All comments will become a matter of public record. Comments are invited on: (a) Whether the collection of information is necessary for the proper performance of the functions of the agency, including whether the information shall have practical utility; (b) the accuracy of the agency's estimate of the burden of the collection of information; (c) ways to enhance the quality, utility, and clarity of the information to be collected; (d) ways to minimize the burden of the collection of information on respondents, including through the use of automated collection techniques or other forms of information technology; and (e) estimates of capital or start-up costs and costs of operation, maintenance, and purchase of services to provide information.

Approved: June 9, 2014.

R. Joseph Durbala,

IRS Supervisory Tax Analyst.

[FR Doc. 2014–15285 Filed 6–27–14; 8:45 am]

BILLING CODE 4830–01–P

DEPARTMENT OF THE TREASURY

Internal Revenue Service

Proposed Collection; Comment Request for Form 5309

AGENCY: Internal Revenue Service (IRS), Treasury.

ACTION: Notice and request for comments.

SUMMARY: The Department of the Treasury, as part of its continuing effort to reduce paperwork and respondent burden, invites the general public and other Federal agencies to take this opportunity to comment on proposed and/or continuing information collections, as required by the Paperwork Reduction Act of 1995, Public Law 104–13 (44 U.S.C. 3506(c)(2)(A)). Currently, the IRS is soliciting comments concerning Form 5309, Application for Determination of Employee Stock Ownership Plan.

DATES: Written comments should be received on or before August 29, 2014 to be assured of consideration.

ADDRESSES: Direct all written comments to R. Joseph Durbala, Internal Revenue Service, Room 6129, 1111 Constitution Avenue NW., Washington, DC 20224.

FOR FURTHER INFORMATION CONTACT: Requests for copies of the form and instructions should be directed to Sara Covington at Internal Revenue Service, Room 6129, 1111 Constitution Avenue NW., Washington, DC 20224, through the Internet at *Sara.L.Covington@irs.gov*.

SUPPLEMENTARY INFORMATION:

Title: Application for Determination of Employee Stock Ownership Plan.

OMB Number: 1545–0284.

Form Number: 5309.

Abstract: Internal Revenue Code section 404(a) allows employers an income tax deduction for contributions to their qualified deferred compensation plans. Form 5309 is used to request an IRS determination letter about whether the plan is qualified under Code section 409 or 4975(e)(7).

Current Actions: There are no changes being made to the form at this time.

Type of Review: Extension of a currently approved collection.

Affected Public: Business or other for-profit organizations.

Estimated Number of Respondents: 2,500.

Estimated Time per Respondent: 10 hrs, 47 minutes.

Estimated Total Annual Burden Hours: 26,975.

The following paragraph applies to all of the collections of information covered by this notice:

An agency may not conduct or sponsor, and a person is not required to respond to, a collection of information unless the collection of information displays a valid OMB control number. Books or records relating to a collection of information must be retained as long as their contents may become material in the administration of any internal revenue law. Generally, tax returns and tax return information are confidential, as required by 26 U.S.C. 6103.

Request for Comments: Comments submitted in response to this notice will be summarized and/or included in the request for OMB approval. All comments will become a matter of public record. Comments are invited on: (a) Whether the collection of information is necessary for the proper performance of the functions of the agency, including whether the information shall have practical utility; (b) the accuracy of the agency's estimate of the burden of the collection of information; (c) ways to enhance the quality, utility, and clarity of the information to be collected; (d) ways to minimize the burden of the collection of information on respondents, including through the use of automated collection techniques or other forms of information technology; and (e) estimates of capital or start-up costs and costs of operation, maintenance, and purchase of services to provide information.

Approved: June 5, 2014.

Joseph Durbala,

Supervisory Tax Analyst.

[FR Doc. 2014–15286 Filed 6–27–14; 8:45 am]

BILLING CODE 4830–01–P

DEPARTMENT OF THE TREASURY

Internal Revenue Service

Proposed Collection; Comment Request for Form 8810

AGENCY: Internal Revenue Service (IRS), Treasury.

ACTION: Notice and request for comments.

SUMMARY: The Department of the Treasury, as part of its continuing effort to reduce paperwork and respondent burden, invites the general public and other Federal agencies to take this opportunity to comment on proposed and/or continuing information collections, as required by the Paperwork Reduction Act. Currently, the IRS is soliciting comments concerning Form 8810, Corporate Passive Activity Loss and Credit Limitations.

DATES: Written comments should be received on or before August 29, 2014 to be assured of consideration.

ADDRESSES: Direct all written comments to R. Joseph Durbala, Internal Revenue Service, room 6129, 1111 Constitution Avenue NW., Washington, DC 20224.

FOR FURTHER INFORMATION CONTACT: Requests for additional information or copies of the form and instructions should be directed to Sara Covington, at Internal Revenue Service, Room 6129, 1111 Constitution Avenue NW., Washington, DC 20224, or through the Internet, at *Sara.L.Covington@irs.gov.*

SUPPLEMENTARY INFORMATION:

Title: Corporate Passive Activity Loss and Credit Limitations.

OMB Number: 1545–1091.

Form Number: 8810.

Abstract: Under Internal Revenue Code section 469, losses and credits from passive activities, to the extent they exceed passive income (or, in the case of credits, the tax attributable to net passive income), are not allowed. Form 8810 is used by personal service corporations and closely held corporations to figure the passive activity loss and credits allowed and the amount of loss and credit to be reported on their tax return.

Current Actions: There are no changes being made to Form 8810 at this time.

Type of Review: Extension of a currently approved collection.

Affected Public: Business or other for-profit organizations.

Estimated Number of Responses: 100,000.

Estimated Time per Response: 37 hr., 29 min.

Estimated Total Annual Burden Hours: 3,749,000.

The following paragraph applies to all of the collections of information covered by this notice:

An agency may not conduct or sponsor, and a person is not required to respond to, a collection of information unless the collection of information displays a valid OMB control number. Books or records relating to a collection of information must be retained as long as their contents may become material in the administration of any internal revenue law. Generally, tax returns and tax return information are confidential, as required by 26 U.S.C. 6103.

Request for Comments: Comments submitted in response to this notice will be summarized and/or included in the

request for OMB approval. All comments will become a matter of public record. Comments are invited on: (a) Whether the collection of information is necessary for the proper performance of the functions of the agency, including whether the information shall have practical utility; (b) the accuracy of the agency's estimate of the burden of the collection of information; (c) ways to enhance the quality, utility, and clarity of the information to be collected; (d) ways to minimize the burden of the collection of information on respondents, including through the use of automated collection techniques or other forms of information technology; and (e) estimates of capital or start-up costs and costs of operation, maintenance, and purchase of services to provide information.

Approved: June 18, 2014.

R. Joseph Durbala,

IRS Supervisory Tax Analyst.

[FR Doc. 2014–15283 Filed 6–27–14; 8:45 am]

BILLING CODE 4830–01–P

DEPARTMENT OF THE TREASURY

Internal Revenue Service

Proposed Collection; Comment Request for Form 1099–R.

AGENCY: Internal Revenue Service (IRS), Treasury.

ACTION: Notice and request for comments.

SUMMARY: The Department of the Treasury, as part of its continuing effort to reduce paperwork and respondent burden, invites the general public and other Federal agencies to take this opportunity to comment on proposed and/or continuing information collections, as required by the Paperwork Reduction Act. Currently, the IRS is soliciting comments concerning Form 1099–R, Distributions From Pensions, Annuities, Retirement or Profit-Sharing Plans, IRAs, Insurance Contracts, etc.

DATES: Written comments should be received on or before August 29, 2014 to be assured of consideration.

ADDRESSES: Direct all written comments to, R. Joseph Durbala, Internal Revenue Service, Room 6129, 1111 Constitution Avenue NW., Washington, DC 20224.

FOR FURTHER INFORMATION CONTACT: Requests for additional information or copies of the form and instructions should be directed to, Sara Covington, at Internal Revenue Service, Room 6129, 1111 Constitution Avenue NW., Washington, DC 20224, or through the Internet, at *Sara.L.Covington@irs.gov.*

SUPPLEMENTARY INFORMATION:

Title: Distributions From Pensions, Annuities, Retirement or Profit-Sharing Plans, IRAs, Insurance Contracts, etc.

OMB Number: 1545–0119. Form Number: 1099–R.

Abstract: Form 1099–R is used to report distributions from pensions, annuities, profit-sharing or retirement plans, IRAs, and the surrender of insurance contracts. This information is used by the IRS to verify that income has been properly reported by the recipient.

Current Actions: There is no change in the current Form 1099–R previously approved by the OMB, but in the annual number of responses, resulting a decrease in annual burden hours of 1,862,994.

Type of Review: This is a revision of a currently approved collection.

Affected Public: Businesses or other for-profit organizations, not for-profit institutions, and Federal, state, local or tribal governments.

Estimated Number of Responses: 89,011,000.

Estimated Time Per Response: .25 min.

Estimated Total Annual Burden Hours: 37,384,620.

The following paragraph applies to all of the collections of information covered by this notice:

An agency may not conduct or sponsor, and a person is not required to respond to, a collection of information unless the collection of information displays a valid OMB control number. Books or records relating to a collection of information must be retained as long as their contents may become material in the administration of any internal revenue law. Generally, tax returns and tax return information are confidential, as required by 26 U.S.C. 6103.

Request for Comments: Comments submitted in response to this notice will be summarized and/or included in the request for OMB approval. All comments will become a matter of public record. Comments are invited on: (a) Whether the collection of information is necessary for the proper performance of the functions of the agency, including whether the information shall have practical utility; (b) the accuracy of the agency's estimate of the burden of the collection of information; (c) ways to enhance the quality, utility, and clarity of the information to be collected; (d) ways to minimize the burden of the collection of information on respondents, including through the use of automated collection techniques or other forms of information technology; and (e) estimates of capital or start-up costs and costs of operation, maintenance, and purchase of services to provide information.

Approved: June 4, 2014.

R. Joseph Durbala,

IRS Tax Analyst.

[FR Doc. 2014–15282 Filed 6–27–14; 8:45 am]

BILLING CODE 4830–01–P

DEPARTMENT OF VETERANS AFFAIRS

[OMB Control No. 2900–NEW]

Agency Information Collection (Servicemember Group Life Insurance (SGLI) Disability Extension Application); Activity Under OMB Review

AGENCY: Veterans Benefits Administration, Department of Veterans Affairs.

ACTION: Notice.

SUMMARY: In compliance with the Paperwork Reduction Act (PRA) of 1995 (44 U.S.C. 3501–3521), this notice announces that the Veterans Benefits Administration (VBA), Department of Veterans Affairs, has submitted the collection of information abstracted below to the Office of Management and Budget (OMB) for review and comment. The PRA submission describes the nature of the information collection and its expected cost and burden; it includes the actual data collection instrument.

DATES: Comments must be submitted on or before July 30, 2014.

ADDRESSES: Submit written comments on the collection of information through *www.Regulations.gov,* or to Office of Information and Regulatory Affairs, Office of Management and Budget, Attn: VA Desk Officer; 725 17th St. NW., Washington, DC 20503 or sent through electronic mail to *oira_submission@omb.eop.gov.* Please refer to ''OMB Control No. 2900–NEW (Servicemember Group Life Insurance (SGLI) Disability Extension Application) in any correspondence.''

FOR FURTHER INFORMATION CONTACT: Crystal Rennie, Enterprise Records Service (005R1B), Department of Veterans Affairs, 810 Vermont Avenue NW., Washington, DC 20420, (202) 632–7492 or email *crystal.rennie@va.gov.* Please refer to ''OMB Control No. 2900–NEW (Servicemember Group Life Insurance (SGLI) Disability Extension Application).''

SUPPLEMENTARY INFORMATION:

Title: Servicemember Group Life Insurance (SGLI) Disability Extension Application, SGLV 8715.

OMB Control Number: 2900–NEW.

Type of Review: New collection.

Abstract: SGLI covered members who are totally disabled when released or separated from such service are entitled to a free extension of their SGLI coverage for the period of their total disability or two years, whichever ends first. This form is needed prior to expiration of the regulatory time periods so that totally disabled Veterans can apply for this free insurance benefit as soon as possible and receive an extension of their SGLI coverage in order to protect their beneficiaries in the event of their death. The information requested is authorized by law, 38 U.S.C. 1966(a), 1967(a), 38 U.S.C. 1968(a)(1)–(4).

An agency may not conduct or sponsor, and a person is not required to respond to a collection of information unless it displays a currently valid OMB control number. The **Federal Register** Notice with a 60-day comment period soliciting comments on this collection of information was published on April 7, 2014, at page 19175.

Affected Public: Individuals or households

Estimated Annual Burden: 2,083 hours.

Estimated Average Burden per Respondent: 25 minutes.

Frequency of Response: One time.

Estimated Number of Respondents: 5,000.

Dated: June 24, 2014.

By direction of the Secretary.

Crystal Rennie,

Department Clearance Officer, Department of Veterans Affairs.

[FR Doc. 2014–15126 Filed 6–27–14; 8:45 am]

BILLING CODE 8320–01–P

FEDERAL REGISTER

Vol. 79 Monday,

No. 125 June 30, 2014

Part II

Environmental Protection Agency

40 CFR Parts 60 and 63

Petroleum Refinery Sector Risk and Technology Review and New Source Performance Standards; Proposed Rule

ENVIRONMENTAL PROTECTION AGENCY

40 CFR Parts 60 and 63

[EPA–HQ–OAR–2010–0682; FRL–9720–4]

RIN 2060–AQ75

Petroleum Refinery Sector Risk and Technology Review and New Source Performance Standards

AGENCY: Environmental Protection Agency.

ACTION: Proposed rule.

SUMMARY: This action proposes amendments to the national emission standards for hazardous air pollutants for petroleum refineries to address the risk remaining after application of the standards promulgated in 1995 and 2002. This action also proposes amendments to the national emission standards for hazardous air pollutants for petroleum refineries based on the results of the Environmental Protection Agency (EPA) review of developments in practices, processes and control technologies and includes new monitoring, recordkeeping and reporting requirements. The EPA is also proposing new requirements related to emissions during periods of startup, shutdown and malfunction to ensure that the standards are consistent with court opinions issued since promulgation of the standards. This action also proposes technical corrections and clarifications for new source performance standards for petroleum refineries to improve consistency and clarity and address issues raised after the 2008 rule promulgation. Implementation of this proposed rule will result in projected reductions of 1,760 tons per year (tpy) of hazardous air pollutants (HAP), which will reduce cancer risk and chronic health effects.

DATES:

Comments. Comments must be received on or before August 29, 2014. A copy of comments on the information collection provisions should be submitted to the Office of Management and Budget (OMB) on or before July 30, 2014.

Public Hearing. The EPA will hold public hearings on this proposed rule on July 16, 2014, at Banning's Landing Community Center, 100 E. Water Street, Wilmington, California 90744, and on August 5, 2014, at the Alvin D. Baggett Recreation Building 1302 Keene Street in Galena Park, Texas, 77547.

ADDRESSES:

Comments. Submit your comments, identified by Docket ID Number EPA–HQ–OAR–2010–0682, by one of the following methods:

- *http://www.regulations.gov:* Follow the on-line instructions for submitting comments.
- *Email: a-and-r-docket@epa.gov.* Attention Docket ID Number EPA–HQ–OAR–2010–0682.
- *Fax:* (202) 566–9744. Attention Docket ID Number EPA–HQ–OAR–2010–0682.
- *Mail:* U.S. Postal Service, send comments to: EPA Docket Center, William Jefferson Clinton (WJC) West Building (Air Docket), Attention Docket ID Number EPA–HQ–OAR–2010–0682, U.S. Environmental Protection Agency, Mailcode: 28221T, 1200 Pennsylvania Ave. NW., Washington, DC 20460. Please include a total of two copies. In addition, please mail a copy of your comments on the information collection provisions to the Office of Information and Regulatory Affairs, Office of Management and Budget (OMB), Attn: Desk Officer for EPA, 725 17th Street NW., Washington, DC 20503.
- *Hand Delivery:* U.S. Environmental Protection Agency, WJC West Building (Air Docket), Room 3334, 1301 Constitution Ave. NW., Washington, DC 20004. Attention Docket ID Number EPA–HQ–OAR–2010–0682. Such deliveries are only accepted during the Docket's normal hours of operation, and special arrangements should be made for deliveries of boxed information.

Instructions. Direct your comments to Docket ID Number EPA–HQ–OAR–2010–0682. The EPA's policy is that all comments received will be included in the public docket without change and may be made available online at *http://www.regulations.gov,* including any personal information provided, unless the comment includes information claimed to be confidential business information (CBI) or other information whose disclosure is restricted by statute. Do not submit information that you consider to be CBI or otherwise protected through *http://www.regulations.gov* or email. The *http://www.regulations.gov* Web site is an ''anonymous access'' system, which means the EPA will not know your identity or contact information unless you provide it in the body of your comment. If you send an email comment directly to the EPA without going through *http://www.regulations.gov,* your email address will be automatically captured and included as part of the comment that is placed in the public docket and made available on the Internet. If you submit an electronic comment, the EPA recommends that you include your name and other contact information in the body of your comment and with any disk or CD–ROM you submit. If the EPA cannot read your comment due to technical difficulties and cannot contact you for clarification, the EPA may not be able to consider your comment. Electronic files should not include special characters or any form of encryption and be free of any defects or viruses. For additional information about the EPA's public docket, visit the EPA Docket Center homepage at: *http://www.epa.gov/dockets.*

Docket. The EPA has established a docket for this rulemaking under Docket ID Number EPA–HQ–OAR–2010–0682. All documents in the docket are listed in the regulations.gov index. Although listed in the index, some information is not publicly available, *e.g.,* CBI or other information whose disclosure is restricted by statute. Certain other material, such as copyrighted material, is not placed on the Internet and will be publicly available only in hard copy. Publicly available docket materials are available either electronically in regulations.gov or in hard copy at the EPA Docket Center, WJC West Building, Room 3334, 1301 Constitution Ave. NW., Washington, DC. The Public Reading Room is open from 8:30 a.m. to 4:30 p.m., Monday through Friday, excluding legal holidays. The telephone number for the Public Reading Room is (202) 566–1744, and the telephone number for the EPA Docket Center is (202) 566–1742.

Public Hearing. The public hearing will be held in Wilmington, California on July 16, 2014 at Banning's Landing Community Center, 100 E. Water Street, Wilmington, California 90744. The hearing will convene at 9 a.m. and end at 8 p.m. A lunch break will be held from 1 p.m. until 2 p.m. A dinner break will be held from 5 p.m. until 6 p.m. The public hearing in Galena Park, Texas will be held on August 5, 2014, at the Alvin D. Baggett Recreation Building 1302 Keene Street Galena Park, Texas 77547. The hearing will convene at 9 a.m. and will end at 8 p.m. A lunch break will be held from noon until 1 p.m. A dinner break will be held from 5 p.m. until 6 p.m. Please contact Ms. Virginia Hunt at (919) 541–0832 or at *hunt.virginia@epa.gov* to register to speak at the hearing. The last day to pre-register in advance to speak at the hearing is July 11, 2014, for the Wilmington, California hearing and August 1, 2014, for the Galena Park, Texas hearing. Additionally, requests to speak will be taken the day of the hearing at the hearing registration desk, although preferences on speaking times may not be able to be fulfilled. If you require the service of a translator or

special accommodations such as audio description, please let us know at the time of registration.

FOR FURTHER INFORMATION CONTACT: For questions about this proposed action, contact Ms. Brenda Shine, Sector Policies and Programs Division (E143–01), Office of Air Quality Planning and Standards (OAQPS), U.S. Environmental Protection Agency, Research Triangle Park, North Carolina 27711; telephone number: (919) 541–3608; fax number: (919) 541–0246; and email address: *shine.brenda@epa.gov.* For specific information regarding the risk modeling methodology, contact Mr. Ted Palma, Health and Environmental Impacts Division (C539–02), Office of Air Quality Planning and Standards (OAQPS), U.S. Environmental Protection Agency, Research Triangle Park, North Carolina 27711; telephone number: (919) 541–5470; fax number: (919) 541–0840; and email address: *palma.ted@epa.gov.* For information about the applicability of the National Emissions Standards for Hazardous Air Pollutants (NESHAP) or the New Source Performance Standards (NSPS) to a particular entity, contact Maria Malave, Office of Enforcement and Compliance Assurance (OECA), telephone number: (202) 564–7027; fax number: (202) 564–0050; and email address: *malave.maria@epa.gov.*

SUPPLEMENTARY INFORMATION:

Preamble Acronyms and Abbreviations

We use multiple acronyms and terms in this preamble. While this list may not be exhaustive, to ease the reading of this preamble and for reference purposes, the EPA defines the following terms and acronyms here:

10/25 tpy emissions equal to or greater than 10 tons per year of a single pollutant or 25 tons per year of cumulative pollutants
ACGIH American Conference of Governmental Industrial Hygienists
ADAF age-dependent adjustment factors
AEGL acute exposure guideline levels
AERMOD air dispersion model used by the HEM–3 model
APCD air pollution control devices
API American Petroleum Institute
BDT best demonstrated technology
BLD bag leak detectors
BSER best system of emission reduction
Btu/ft^2 British thermal units per square foot
Btu/scf British thermal units per standard cubic foot
CAA Clean Air Act
CalEPA California EPA
CBI confidential business information
CCU catalytic cracking units
C_{cz} combustion zone combustibles concentration
CDDF chlorinated dibenzodioxins and furans
CDX Central Data Exchange
CEDRI Compliance and Emissions Data Reporting Interface
CEMS continuous emissions monitoring system
CFR Code of Federal Regulations
CO carbon monoxide
CO_2 carbon dioxide
CO_2e carbon dioxide equivalents
COMS continuous opacity monitoring system
COS carbonyl sulfide
CPMS continuous parameter monitoring system
CRU catalytic reforming units
CS_2 carbon disulfide
DCU delayed coking units
DIAL differential absorption light detection and ranging
EBU enhanced biological unit
EPA Environmental Protection Agency
ERPG emergency response planning guidelines
ERT Electronic Reporting Tool
ESP electrostatic precipitator
FCCU fluid catalytic cracking units
FGCD fuel gas combustion devices
FR **Federal Register**
FTIR Fourier transform infrared spectroscopy
g PM/kg grams particulate matter per kilogram
GC gas chromatograph
GHG greenhouse gases
GPS global positioning system
H_2S hydrogen sulfide
HAP hazardous air pollutants
HCl hydrogen chloride
HCN hydrogen cyanide
HEM–3 Human Exposure Model, Version 1.1.0
HF hydrogen fluoride
HFC highest fenceline concentration
HI hazard index
HQ hazard quotient
ICR Information Collection Request
IRIS Integrated Risk Information System
km kilometers
lb/day pounds per day
LDAR leak detection and repair
LFL lower flammability limit
LFL_{cz} combustion zone lower flammability limit
LMC lowest measured concentration
LOAEL lowest-observed-adverse-effect level
LTD long tons per day
MACT maximum achievable control technology
mg/kg-day milligrams per kilogram per day
mg/L milligrams per liter
mg/m^3 milligrams per cubic meter
Mg/yr megagrams per year
MFC measured fenceline concentration
MFR momentum flux ratio
MIR maximum individual risk
mph miles per hour
NAAQS National Ambient Air Quality Standards
NAICS North American Industry Classification System
NAS National Academy of Sciences
NATA National Air Toxics Assessment
NEI National Emissions Inventory
NESHAP National Emissions Standards for Hazardous Air Pollutants
NFS near-field interfering source
NHV_{cz} combustion zone net heating value
Ni nickel
NIOSH National Institutes for Occupational Safety and Health
NOAEL no-observed-adverse-effect level
NO_X nitrogen oxides
NRC National Research Council
NRDC Natural Resources Defense Council
NSPS new source performance standards
NTTAA National Technology Transfer and Advancement Act
OAQPS Office of Air Quality Planning and Standards
OECA Office of Enforcement and Compliance Assurance
OMB Office of Management and Budget
OSC off-site source contribution
OTM other test method
PAH polycyclic aromatic hydrocarbons
PB–HAP hazardous air pollutants known to be persistent and bio-accumulative in the environment
PBT persistent, bioaccumulative, and toxic
PCB polychlorinated biphenyls
PEL probable effect level
PM particulate matter
$PM_{2.5}$ particulate matter 2.5 micrometers in diameter and smaller
POM polycyclic organic matter
ppm parts per million
ppmv parts per million by volume
ppmw parts per million by weight
psia pounds per square inch absolute
psig pounds per square inch gauge
REL reference exposure level
REM Model Refinery Emissions Model
RFA Regulatory Flexibility Act
RfC reference concentration
RfD reference dose
RTR residual risk and technology review
SAB Science Advisory Board
SBA Small Business Administration
SBAR Small Business Advocacy Review
SCR selective catalytic reduction
SISNOSE significant economic impact on a substantial number of small entities
S/L/Ts state, local and tribal air pollution control agencies
SO_2 sulfur dioxide
SRU sulfur recovery unit
SSM startup, shutdown and malfunction
STEL short-term exposure limit
TEQ toxicity equivalent
TLV threshold limit value
TOC total organic carbon
TOSHI target organ-specific hazard index
tpy tons per year
TRIM.FaTE Total Risk Integrated Methodology.Fate, Transport, and Ecological Exposure model
UB uniform background
UF uncertainty factor
UMRA Unfunded Mandates Reform Act
URE unit risk estimate
UV–DOAS ultraviolet differential optical absorption spectroscopy
VCS voluntary consensus standards
VOC volatile organic compounds
WJC William Jefferson Clinton
°F degrees Fahrenheit
ΔC the concentration difference between the highest measured concentration and the lowest measured concentration
μg/m^3 micrograms per cubic meter

The EPA also defines the following abbreviations for regulations cited within this preamble:

AWP Alternative Work Practice To Detect Leaks From Equipment (40 CFR 63.11(c), (d) and (e))
Benzene NESHAP National Emission Standards for Hazardous Air Pollutants: Benzene Emissions from Maleic Anhydride Plants, Ethylbenzene/Styrene Plants, Benzene Storage Vessels, Benzene Equipment Leaks, and Coke By-Product Recovery Plants (40 CFR part 61, subpart L as of publication in the **Federal Register** at 54 FR 38044, September 14, 1989)
BWON National Emission Standard for Benzene Waste Operations (40 CFR part 61, subpart FF)
Generic MACT National Emission Standards for Storage Vessels (40 CFR part 63, subpart WW)
HON National Emission Standards for Organic Hazardous Air Pollutants (40 CFR part 63, subparts F, G and H)
Marine Vessel MACT National Emission Standards for Marine Tank Vessel Loading Operations (40 CFR part 63, subpart Y)
Refinery MACT 1 National Emission Standards for Hazardous Air Pollutants From Petroleum Refineries (40 CFR part 63, subpart CC)
Refinery MACT 2 National Emission Standards for Hazardous Air Pollutants for Petroleum Refineries: Catalytic Cracking Units, Catalytic Reforming Units, and Sulfur Recovery Units (40 CFR part 63, subpart UUU)
Refinery NSPS J Standards of Performance for Petroleum Refineries (40 CFR part 60, subpart J)
Refinery NSPS Ja Standards of Performance for Petroleum Refineries for which Construction, Reconstruction, or Modification Commenced After May 14, 2007 (40 CFR part 60, subpart Ja)

Organization of This Document. The information in this preamble is organized as follows:

I. General Information
A. Does this action apply to me?
B. Where can I get a copy of this document and other related information?
C. What should I consider as I prepare my comments for the EPA?
D. Public Hearing
II. Background
A. What is the statutory authority for this action?
B. What are the source categories and how do the NESHAP and NSPS regulate emissions?
C. What data collection activities were conducted to support this action?
D. What other relevant background information and data are available?
III. Analytical Procedures
A. How did we estimate post-MACT risks posed by the source categories?
B. How did we consider the risk results in making decisions for this proposal?
C. How did we perform the technology review?
IV. Analytical Results and Proposed Decisions
A. What actions are we taking pursuant to CAA sections 112(d)(2) and 112(d)(3)?
B. What are the results and proposed decisions based on our technology review?
C. What are the results of the risk assessment and analyses?
D. What are our proposed decisions regarding risk acceptability, ample margin of safety and adverse environmental effects?
E. What other actions are we proposing?
F. What compliance dates are we proposing?
V. Summary of Cost, Environmental and Economic Impacts
A. What are the affected sources, the air quality impacts and cost impacts?
B. What are the economic impacts?
C. What are the benefits?
VI. Request for Comments
VII. Submitting Data Corrections
VIII. Statutory and Executive Order Reviews
A. Executive Order 12866: Regulatory Planning and Review and Executive Order 13563: Improving Regulation and Regulatory Review
B. Paperwork Reduction Act
C. Regulatory Flexibility Act
D. Unfunded Mandates Reform Act
E. Executive Order 13132: Federalism
F. Executive Order 13175: Consultation and Coordination With Indian Tribal Governments
G. Executive Order 13045: Protection of Children From Environmental Health Risks and Safety Risks
H. Executive Order 13211: Actions Concerning Regulations That Significantly Affect Energy Supply, Distribution, or Use
I. National Technology Transfer and Advancement Act
J. Executive Order 12898: Federal Actions To Address Environmental Justice in Minority Populations and Low-Income Populations

A redline version of the regulatory language that incorporates the proposed changes in this action is available in the docket for this action (Docket ID No. EPA–HQ–OAR–2010–0682).

I. General Information

A. Does this action apply to me?

Table 1 of this preamble lists the industries that are the subject of this proposal. Table 1 is not intended to be exhaustive but rather to provide a guide for readers regarding the entities that this proposed action is likely to affect. These proposed standards, once promulgated, will be directly applicable to the affected sources. Thus, federal, state, local and tribal government entities would not be affected by this proposed action. As defined in the ''Initial List of Categories of Sources Under Section 112(c)(1) of the Clean Air Act Amendments of 1990'' (see 57 FR 31576, July 16, 1992), the ''Petroleum Refineries—Catalytic Cracking (Fluid and other) Units, Catalytic Reforming Units, and Sulfur Plant Units'' source category and the ''Petroleum Refineries—Other Sources Not Distinctly Listed'' both consist of any facility engaged in producing gasoline, naphthas, kerosene, jet fuels, distillate fuel oils, residual fuel oils, lubricants, or other products from crude oil or unfinished petroleum derivatives. The first of these source categories includes process vents associated with the following refinery process units: Catalytic cracking (fluid and other) units, catalytic reforming units and sulfur plant units. The second source category includes all emission sources associated with refinery process units except the process vents listed in the Petroleum Refineries—Catalytic Cracking (Fluid and Other) Units, Catalytic Reforming Units, and Sulfur Plant Units Source Category. The emission sources included in this source category include, but are not limited to, miscellaneous process vents (vents other than those listed in Petroleum Refineries—Catalytic Cracking (Fluid and Other) Units, Catalytic Reforming Units, and Sulfur Plant Units Source Category), equipment leaks, storage vessels, wastewater, gasoline loading, marine vessel loading, and heat exchange systems.

TABLE 1—INDUSTRIES AFFECTED BY THIS PROPOSED ACTION

Industry	NAICS[a] Code	Examples of regulated entities
Petroleum Refining Industry	324110	Petroleum refinery sources that are subject to 40 CFR part 60, subpart J and Ja and 40 CFR part 63, subparts CC and UUU.

[a] North American Industry Classification System.

B. Where can I get a copy of this document and other related information?

Following signature by the EPA Administrator, the EPA will post a copy of this proposed action at: *http://www.epa.gov/ttn/atw/petref.html*. Following publication in the **Federal Register**, the EPA will post the **Federal Register** version of the proposal and key technical documents at the Web site. Information on the overall residual risk and technology review (RTR) program is available at the following Web site: *http://www.epa.gov/ttn/atw/rrisk/rtrpg.html*.

C. What should I consider as I prepare my comments for the EPA?

Submitting CBI. Do not submit information containing CBI to the EPA through *http://www.regulations.gov* or email. Clearly mark the part or all of the information that you claim to be CBI. For CBI information on a disk or CD–ROM that you mail to the EPA, mark the outside of the disk or CD–ROM as CBI and then identify electronically within the disk or CD–ROM the specific information that is claimed as CBI. In addition to one complete version of the comments that includes information claimed as CBI, you must submit a copy of the comments that does not contain the information claimed as CBI for inclusion in the public docket. If you submit a CD–ROM or disk that does not contain CBI, mark the outside of the disk or CD–ROM clearly that it does not contain CBI. Information not marked as CBI will be included in the public docket and the EPA's electronic public docket without prior notice. Information marked as CBI will not be disclosed except in accordance with procedures set forth in 40 Code of Federal Regulations (CFR) part 2. Send or deliver information identified as CBI only to the following address: Roberto Morales, OAQPS Document Control Officer (C404–02), OAQPS, U.S. Environmental Protection Agency, Research Triangle Park, North Carolina 27711, Attention Docket ID Number EPA–HQ–OAR–2010–0682.

D. Public Hearing

The hearing will provide interested parties the opportunity to present data, views or arguments concerning the proposed action. The EPA will make every effort to accommodate all speakers who arrive and register. The EPA may ask clarifying questions during the oral presentations but will not respond to the presentations at that time. Written statements and supporting information submitted during the comment period will be considered with the same weight as oral comments and supporting information presented at the public hearing. Written comments on the proposed rule must be postmarked by August 29, 2014. Commenters should notify Ms. Virginia Hunt if they will need specific equipment, or if there are other special needs related to providing comments at the hearing. Oral testimony will be limited to 5 minutes for each commenter. The EPA encourages commenters to provide the EPA with a copy of their oral testimony electronically (via email or CD) or in hard copy form. Verbatim transcripts of the hearings and written statements will be included in the docket for the rulemaking. The EPA will make every effort to follow the schedule as closely as possible on the day of the hearing; however, please plan for the hearing to run either ahead of schedule or behind schedule. Information regarding the hearing will be available at: *http://www.epa.gov/ttnatw01/petrefine/petrefpg.html*.

II. Background

A. What is the statutory authority for this action?

1. NESHAP

Section 112 of the Clean Air Act (CAA) establishes a two-stage regulatory process to address emissions of HAP from stationary sources. In the first stage, after the EPA has identified categories of sources emitting one or more of the HAP listed in CAA section 112(b), CAA section 112(d) requires us to promulgate technology-based national emissions standards for hazardous air pollutants (NESHAP) for those sources. ''Major sources'' are those that emit or have the potential to emit 10 tpy or more of a single HAP or 25 tpy or more of any combination of HAP. For major sources, the technology-based NESHAP must reflect the maximum degree of emissions reductions of HAP achievable (after considering cost, energy requirements and non-air quality health and environmental impacts) and are commonly referred to as maximum achievable control technology (MACT) standards.

MACT standards must reflect the maximum degree of emissions reduction achievable through the application of measures, processes, methods, systems or techniques, including, but not limited to, measures that (1) reduce the volume of or eliminate pollutants through process changes, substitution of materials or other modifications; (2) enclose systems or processes to eliminate emissions; (3) capture or treat pollutants when released from a process, stack, storage or fugitive emissions point; (4) are design, equipment, work practice or operational standards (including requirements for operator training or certification); or (5) are a combination of the above. CAA section 112(d)(2)(A)–(E). The MACT standards may take the form of design, equipment, work practice or operational standards where the EPA first determines either that (1) a pollutant cannot be emitted through a conveyance designed and constructed to emit or capture the pollutant, or that any requirement for, or use of, such a conveyance would be inconsistent with law; or (2) the application of measurement methodology to a particular class of sources is not practicable due to technological and economic limitations. CAA section 112(h)(1)–(2).

The MACT ''floor'' is the minimum control level allowed for MACT standards promulgated under CAA section 112(d)(3) and may not be based on cost considerations. For new sources, the MACT floor cannot be less stringent than the emissions control that is achieved in practice by the best-controlled similar source. The MACT floor for existing sources can be less stringent than floors for new sources but not less stringent than the average emissions limitation achieved by the best-performing 12 percent of existing sources in the category or subcategory (or the best-performing five sources for categories or subcategories with fewer than 30 sources). In developing MACT standards, the EPA must also consider control options that are more stringent than the floor. We may establish standards more stringent than the floor based on considerations of the cost of achieving the emission reductions, any non-air quality health and environmental impacts and energy requirements.

The EPA is then required to review these technology-based standards and revise them ''as necessary (taking into account developments in practices, processes, and control technologies)'' no less frequently than every eight years. CAA section 112(d)(6). In conducting this review, the EPA is not required to recalculate the MACT floor. *Natural Resources Defense Council (NRDC)* v. *EPA,* 529 F.3d 1077, 1084 (D.C. Cir. 2008). *Association of Battery Recyclers, Inc.* v. *EPA,* 716 F.3d 667 (D.C. Cir. 2013).

The second stage in standard-setting focuses on reducing any remaining (*i.e.,* ''residual'') risk according to CAA section 112(f). Section 112(f)(1) required that the EPA by November 1996 prepare a report to Congress discussing (among

other things) methods of calculating the risks posed (or potentially posed) by sources after implementation of the MACT standards, the public health significance of those risks and the EPA's recommendations as to legislation regarding such remaining risk. The EPA prepared and submitted the *Residual Risk Report to Congress,* EPA–453/R–99–001 (*Risk Report*) in March 1999. CAA section 112(f)(2) then provides that if Congress does not act on any recommendation in the *Risk Report,* the EPA must analyze and address residual risk for each category or subcategory of sources 8 years after promulgation of such standards pursuant to CAA section 112(d).

Section 112(f)(2) of the CAA requires the EPA to determine for source categories subject to MACT standards whether the emission standards provide an ample margin of safety to protect public health. Section 112(f)(2)(B) of the CAA expressly preserves the EPA's use of the two-step process for developing standards to address any residual risk and the agency's interpretation of ''ample margin of safety'' developed in the National Emissions Standards for Hazardous Air Pollutants: Benzene Emissions from Maleic Anhydride Plants, Ethylbenzene/Styrene Plants, Benzene Storage Vessels, Benzene Equipment Leaks, and Coke By-Product Recovery Plants (Benzene NESHAP) (54 FR 38044, September 14, 1989). The EPA notified Congress in the *Risk Report* that the agency intended to use the Benzene NESHAP approach in making CAA section 112(f) residual risk determinations (EPA–453/R–99–001, p. ES–11). The EPA subsequently adopted this approach in its residual risk determinations and in a challenge to the risk review for the Synthetic Organic Chemical Manufacturing source category, the United States Court of Appeals for the District of Columbia Circuit upheld as reasonable the EPA's interpretation that subsection 112(f)(2) incorporates the standards established in the Benzene NESHAP. *See NRDC* v. *EPA,* 529 F.3d 1077, 1083 (D.C. Cir. 2008) (''[S]ubsection 112(f)(2)(B) expressly incorporates the EPA's interpretation of the Clean Air Act from the Benzene standard, complete with a citation to the **Federal Register**.''); *see also A Legislative History of the Clean Air Act Amendments of 1990,* vol. 1, p. 877 (Senate debate on Conference Report).

The first step in the process of evaluating residual risk is the determination of acceptable risk. If risks are unacceptable, the EPA cannot consider cost in identifying the emissions standards necessary to bring risks to an acceptable level. The second step is the determination of whether standards must be further revised in order to provide an ample margin of safety to protect public health. The ample margin of safety is the level at which the standards must be set, unless an even more stringent standard is necessary to prevent, taking into consideration costs, energy, safety and other relevant factors, an adverse environmental effect.

a. Step 1—Determining Acceptability

The agency in the Benzene NESHAP concluded ''that the acceptability of risk under section 112 is best judged on the basis of a broad set of health risk measures and information'' and that the ''judgment on acceptability cannot be reduced to any single factor.'' *Id.* at 38046. The determination of what represents an ''acceptable'' risk is based on a judgment of ''what risks are acceptable in the world in which we live'' (*Risk Report* at 178, quoting *NRDC* v. *EPA,* 824 F. 2d 1146, 1165 (D.C. Cir. 1987) (en banc) (''Vinyl Chloride''), recognizing that our world is not risk-free.

In the Benzene NESHAP, we stated that ''EPA will generally presume that if the risk to [the maximum exposed] individual is no higher than approximately one in 10 thousand, that risk level is considered acceptable.'' 54 FR at 38045, September 14, 1989. We discussed the maximum individual lifetime cancer risk (or maximum individual risk (MIR)) as being ''the estimated risk that a person living near a plant would have if he or she were exposed to the maximum pollutant concentrations for 70 years.'' *Id.* We explained that this measure of risk ''is an estimate of the upper bound of risk based on conservative assumptions, such as continuous exposure for 24 hours per day for 70 years.'' *Id.* We acknowledged that maximum individual lifetime cancer risk ''does not necessarily reflect the true risk, but displays a conservative risk level which is an upper-bound that is unlikely to be exceeded.'' *Id.*

Understanding that there are both benefits and limitations to using the MIR as a metric for determining acceptability, we acknowledged in the Benzene NESHAP that ''consideration of maximum individual risk * * * must take into account the strengths and weaknesses of this measure of risk.'' *Id.* Consequently, the presumptive risk level of 100-in-1 million (1-in-10 thousand) provides a benchmark for judging the acceptability of maximum individual lifetime cancer risk, but does not constitute a rigid line for making that determination. Further, in the Benzene NESHAP, we noted that:

> [p]articular attention will also be accorded to the weight of evidence presented in the risk assessment of potential carcinogenicity or other health effects of a pollutant. While the same numerical risk may be estimated for an exposure to a pollutant judged to be a known human carcinogen, and to a pollutant considered a possible human carcinogen based on limited animal test data, the same weight cannot be accorded to both estimates. In considering the potential public health effects of the two pollutants, the Agency's judgment on acceptability, including the MIR, will be influenced by the greater weight of evidence for the known human carcinogen.

Id. at 38046. The agency also explained in the Benzene NESHAP that:

> [i]n establishing a presumption for MIR, rather than a rigid line for acceptability, the Agency intends to weigh it with a series of other health measures and factors. These include the overall incidence of cancer or other serious health effects within the exposed population, the numbers of persons exposed within each individual lifetime risk range and associated incidence within, typically, a 50 km exposure radius around facilities, the science policy assumptions and estimation uncertainties associated with the risk measures, weight of the scientific evidence for human health effects, other quantified or unquantified health effects, effects due to co-location of facilities, and co-emission of pollutants.

Id. at 38045. In some cases, these health measures and factors taken together may provide a more realistic description of the magnitude of risk in the exposed population than that provided by maximum individual lifetime cancer risk alone.

As noted earlier, in *NRDC* v. *EPA,* the court held that section 112(f)(2) ''incorporates the EPA's interpretation of the Clean Air Act from the Benzene Standard.'' The court further held that Congress' incorporation of the Benzene standard applies equally to carcinogens and non-carcinogens. 529 F.3d at 1081–82. Accordingly, we also consider non-cancer risk metrics in our determination of risk acceptability and ample margin of safety.

b. Step 2—Determination of Ample Margin of Safety

CAA section 112(f)(2) requires the EPA to determine, for source categories subject to MACT standards, whether those standards provide an ample margin of safety to protect public health. As explained in the Benzene NESHAP, ''the second step of the inquiry, determining an 'ample margin of safety,' again includes consideration of all of the health factors, and whether to reduce the risks even further. . . .

Beyond that information, additional factors relating to the appropriate level of control will also be considered, including costs and economic impacts of controls, technological feasibility, uncertainties and any other relevant factors. Considering all of these factors, the agency will establish the standard at a level that provides an ample margin of safety to protect the public health, as required by section 112.'' 54 FR at 38046, September 14, 1989.

According to CAA section 112(f)(2)(A), if the MACT standards for HAP ''classified as a known, probable, or possible human carcinogen do not reduce lifetime excess cancer risks to the individual most exposed to emissions from a source in the category or subcategory to less than one in one million,'' the EPA must promulgate residual risk standards for the source category (or subcategory), as necessary to provide an ample margin of safety to protect public health. In doing so, the EPA may adopt standards equal to existing MACT standards if the EPA determines that the existing standards (*i.e.,* the MACT standards) are sufficiently protective. *NRDC* v. *EPA,* 529 F.3d 1077, 1083 (D.C. Cir. 2008) (''If EPA determines that the existing technology-based standards provide an 'ample margin of safety,' then the Agency is free to readopt those standards during the residual risk rulemaking.'') The EPA must also adopt more stringent standards, if necessary, to prevent an adverse environmental effect,[1] but must consider cost, energy, safety and other relevant factors in doing so.

The CAA does not specifically define the terms ''individual most exposed,'' ''acceptable level'' and ''ample margin of safety.'' In the Benzene NESHAP, 54 FR at 38044–38045, September 14, 1989, we stated as an overall objective:

> In protecting public health with an ample margin of safety under section 112, EPA strives to provide maximum feasible protection against risks to health from hazardous air pollutants by (1) protecting the greatest number of persons possible to an individual lifetime risk level no higher than approximately 1-in-1 million and (2) limiting to no higher than approximately 1-in-10 thousand [i.e., 100-in-1 million] the estimated risk that a person living near a plant would have if he or she were exposed to the maximum pollutant concentrations for 70 years.

The agency further stated that ''[t]he EPA also considers incidence (the number of persons estimated to suffer cancer or other serious health effects as a result of exposure to a pollutant) to be an important measure of the health risk to the exposed population. Incidence measures the extent of health risks to the exposed population as a whole, by providing an estimate of the occurrence of cancer or other serious health effects in the exposed population.'' *Id.* at 38045.

In the ample margin of safety decision process, the agency again considers all of the health risks and other health information considered in the first step, including the incremental risk reduction associated with standards more stringent than the MACT standard or a more stringent standard that EPA has determined is necessary to ensure risk is acceptable. In the ample margin of safety analysis, the agency considers additional factors, including costs and economic impacts of controls, technological feasibility, uncertainties and any other relevant factors. Considering all of these factors, the agency will establish the standard ''at a level that provides an ample margin of safety to protect the public health,'' as required by CAA section 112(f). 54 FR 38046, September 14, 1989.

2. NSPS

Section 111 of the CAA establishes mechanisms for controlling emissions of air pollutants from stationary sources. Section 111(b) of the CAA provides authority for the EPA to promulgate new source performance standards (NSPS) which apply only to newly constructed, reconstructed and modified sources. Once the EPA has elected to set NSPS for new and modified sources in a given source category, CAA section 111(d) calls for regulation of existing sources, with certain exceptions explained below.

Specifically, section 111(b) of the CAA requires the EPA to establish emission standards for any category of new and modified stationary sources that the Administrator, in his or her judgment, finds ''causes, or contributes significantly to, air pollution which may reasonably be anticipated to endanger public health or welfare.'' The EPA has previously made endangerment findings under this section of the CAA for more than 60 stationary source categories and subcategories that are now subject to NSPS.

Section 111 of the CAA gives the EPA significant discretion to identify the affected facilities within a source category that should be regulated. To define the affected facilities, the EPA can use size thresholds for regulation and create subcategories based on source type, class or size. Emission limits also may be established either for equipment within a facility or for an entire facility. For listed source categories, the EPA must establish ''standards of performance'' that apply to sources that are constructed, modified or reconstructed after the EPA proposes the NSPS for the relevant source category.[2]

The EPA also has significant discretion to determine the appropriate level for the standards. Section 111(a)(1) of the CAA provides that NSPS are to ''reflect the degree of emission limitation achievable through the application of the best system of emission reduction which (taking into account the cost of achieving such reduction and any non-air quality health and environmental impact and energy requirements) the Administrator determines has been adequately demonstrated.'' This level of control is commonly referred to as best demonstrated technology (BDT) or the best system of emission reduction (BSER). The standard that the EPA develops, based on the BSER achievable at that source, is commonly a numerical emission limit, expressed as a performance level (*i.e.,* a rate-based standard). Generally, the EPA does not prescribe a particular technological system that must be used to comply with a NSPS. Rather, sources remain free to elect whatever combination of measures will achieve equivalent or greater control of emissions.

Costs are also considered in evaluating the appropriate standard of performance for each category or subcategory. The EPA generally compares control options and estimated costs and emission impacts of multiple, specific emission standard options under consideration. As part of this analysis, the EPA considers numerous factors relating to the potential cost of the regulation, including industry organization and market structure, control options available to reduce emissions of the regulated pollutant(s) and costs of these controls.

[1] ''Adverse environmental effect'' is defined as any significant and widespread adverse effect, which may be reasonably anticipated to wildlife, aquatic life or natural resources, including adverse impacts on populations of endangered or threatened species or significant degradation of environmental qualities over broad areas. CAA section 112(a)(7).

[2] Specific statutory and regulatory provisions define what constitutes a modification or reconstruction of a facility. 40 CFR 60.14 provides that an existing facility is modified and, therefore, subject to an NSPS, if it undergoes ''any physical change in the method of operation . . . which increases the amount of any air pollutant emitted by such source or which results in the emission of any air pollutant not previously emitted.'' 40 CFR 60.15, in turn, provides that a facility is reconstructed if components are replaced at an existing facility to such an extent that the capital cost of the new equipment/components exceed 50 percent of what is believed to be the cost of a completely new facility.

B. What are the source categories and how do the NESHAP and NSPS regulate emissions?

The source categories include petroleum refineries engaged in converting crude oil into refined products, including liquefied petroleum gas, gasoline, kerosene, aviation fuel, diesel fuel, fuel oils, lubricating oils and feedstocks for the petrochemical industry. Petroleum refinery activities start with the receipt of crude oil for storage at the refinery, include all petroleum handling and refining operations, and terminate with loading of refined products into pipelines, tank or rail cars, tank trucks, or ships or barges that take products from the refinery to distribution centers. Petroleum refinery-specific process units include fluid catalytic cracking units (FCCU) and catalytic reforming units (CRU), as well as units and processes found at many types of manufacturing facilities (including petroleum refineries), such as storage vessels and wastewater treatment plants. HAP emitted by this industry include organics (*e.g.,* acetaldehyde, benzene, formaldehyde, hexane, phenol, naphthalene, 2-methylnaphthalene, dioxins, furans, ethyl benzene, toluene and xylene); reduced sulfur compounds (*i.e.,* carbonyl sulfide (COS), carbon disulfide (CS_2)); inorganics (*e.g.,* hydrogen chloride (HCl), hydrogen cyanide (HCN), chlorine, hydrogen fluoride (HF)); and metals (*e.g.,* antimony, arsenic, beryllium, cadmium, chromium, cobalt, lead, mercury, manganese and nickel). Criteria pollutants and other non-hazardous air pollutants that are also emitted include nitrogen oxides (NO_X), particulate matter (PM), sulfur dioxide (SO_2), volatile organic compounds (VOC), carbon monoxide (CO), greenhouse gases (GHG), and total reduced sulfur.

The federal emission standards that are the primary subject of this proposed rulemaking are:

- National Emission Standards for Hazardous Air Pollutants from Petroleum Refineries (40 CFR part 63, subpart CC) (Refinery MACT 1);
- National Emission Standards for Hazardous Air Pollutants for Petroleum Refineries: Catalytic Cracking Units, Catalytic Reforming Units, and Sulfur Recovery Units (40 CFR part 63, subpart UUU) (Refinery MACT 2);
- Standards of Performance for Petroleum Refineries (40 CFR part 60, subpart J) (Refinery NSPS J); and
- Standards of Performance for Petroleum Refineries for which Construction, Reconstruction, or Modification Commenced After May 14, 2007 (40 CFR part 60, subpart Ja) (Refinery NSPS Ja).

1. Refinery MACT Standards

The EPA promulgated MACT standards pursuant to CAA section 112(d)(2) and (3) for refineries located at major sources in three separate rules. On August 18, 1995, the first Petroleum Refinery MACT standard was promulgated in 40 CFR part 63, subpart CC (60 FR 43620). This rule is known as ''Refinery MACT 1'' and covers the ''Sources Not Distinctly Listed,'' meaning it includes all emission sources from petroleum refinery process units, except those listed separately under the section 112(c) source category list expected to be regulated by other MACT standards. Some of the emission sources regulated in Refinery MACT 1 include miscellaneous process vents, storage vessels, wastewater, equipment leaks, gasoline loading racks, marine tank vessel loading and heat exchange systems.

Certain process vents that were listed as a separate source category under CAA section 112(c) and that were not addressed as part of the Refinery MACT 1 were subsequently regulated under a second MACT standard specific to these petroleum refinery process vents, codified as 40 CFR part 63, subpart UUU, which we promulgated on April 11, 2002 (67 FR 17762). This standard, which is referred to as ''Refinery MACT 2,'' covers process vents on catalytic cracking units (CCU) (including FCCU), CRU and sulfur recovery units (SRU).

Finally, on October 28, 2009, we promulgated MACT standards for heat exchange systems, which the EPA had not addressed in the original 1995 Refinery MACT 1 rule (74 FR 55686). In this same 2009 action, we updated cross-references to the General Provisions in 40 CFR part 63. On June 20, 2013 (78 FR 37133), we promulgated minor revisions to the heat exchange provisions of Refinery MACT 1.

On September 27, 2012, Air Alliance Houston, California Communities Against Toxics and other environmental and public health groups filed a lawsuit alleging that the EPA missed statutory deadlines to review and revise Refinery MACT 1 and 2.

The EPA has reached an agreement to settle that litigation. In a consent decree filed January 13, 2014 in the U.S. District Court for the District of Columbia, the EPA commits to perform the risk and technology review for Refinery MACT 1 and 2 and by May 15, 2014, either propose any regulations or propose that additional regulations are not necessary. Under the Consent Decree, the EPA commits to take final action by April 17, 2015, establishing regulations pursuant to the risk and technology review or to issue a final determination that revision to the existing rules is not necessary.

2. Refinery NSPS

Refinery NSPS subparts J and Ja regulate criteria pollutant emissions, including PM, SO_2, NO_X and CO from FCCU catalyst regenerators, fuel gas combustion devices (FGCD) and sulfur recovery plants. Refinery NSPS Ja also regulates criteria pollutant emissions from fluid coking units and delayed coking units (DCU).

The NSPS for petroleum refineries (40 CFR part 60, subpart J; Refinery NSPS J) were promulgated in 1974, amended in 1976 and amended again in 2008, following a review of the standards. As part of the review that led to the 2008 amendments to Refinery NSPS J, the EPA developed separate standards of performance for new process units (40 CFR part 60, subpart Ja; Refinery NSPS Ja). However, the EPA received petitions for reconsideration and granted reconsideration on issues related to those standards. On December 22, 2008, the EPA addressed petition issues related to process heaters and flares by proposing amendments to certain provisions. Final amendments to Refinery NSPS Ja were promulgated on September 12, 2012 (77 FR 56422).

In this action, we are proposing amendments to address technical corrections and clarifications raised in a 2008 industry petition for reconsideration applicable to Refinery NSPS Ja. We are addressing these issues in this proposal because they also affect sources included within these proposed amendments to Refinery MACT 1 and 2.

C. What data collection activities were conducted to support this action?

In 2010, the EPA began a significant effort to gather additional information and perform analyses to determine how to address statutory obligations for the Refinery MACT standards and the NSPS. This effort focused on gathering comprehensive information through an industry-wide Information Collection Request (ICR) on petroleum refineries, conducted under CAA section 114 authority. The information not claimed as CBI by respondents is available in the docket (see Docket Item Nos. EPA–HQ–OAR–2010–0682–0064 through 0069). The EPA issued a single ICR (OMB Control Number 2060–0657) for sources covered under Refinery MACT 1 and 2 and Refinery NSPS J and Ja.

On April 1, 2011, the ICR was sent out to the petroleum refining industry. In a comprehensive manner, the ICR

collected information on processing characteristics, crude slate characteristics, emissions inventories and source testing to fill known data gaps. The ICR had four components: (1) A questionnaire on processes and controls to be completed by all petroleum refineries (Component 1); (2) an emissions inventory to be developed by all petroleum refineries using the emissions estimation protocol developed for this effort (Component 2); (3) distillation feed sampling and analysis to be conducted by all petroleum refineries (Component 3); and (4) emissions source testing to be completed in accordance with an EPA-approved protocol for specific sources at specific petroleum refineries (Component 4). We received responses from 149 refineries. We have since learned that seven refineries are synthetic minor sources, bringing the total number of major source refineries operating in 2010 to 142.

Information collected through the ICR was used to establish the baseline emissions and control levels for purposes of the regulatory reviews, to identify the most effective control measures, and to estimate the environmental and cost impacts associated with the regulatory options considered. As part of the information collection process, we provided a protocol for survey respondents to follow in developing the emissions inventories under Component 2 (*Emission Estimation Protocol for Petroleum Refineries,* available as Docket Item Number EPA–HQ–OAR–2010–0682–0060). The protocol contained detailed guidance for estimating emissions from typical refinery emission sources and was intended to provide a measure of consistency and replicability for emission estimates across the refining industry. Prior to issuance of the ICR, the protocol was publicly disseminated and underwent several revisions after public comments were received. Draft and final versions of the emission estimation protocol are provided in the docket to this rule (Docket ID Number EPA–HQ–OAR–2010–0682). The protocol provided a hierarchy of methodologies available for estimating emissions that corresponded to the level of information available at refineries. For each emission source, the various emission measurement or estimation methods specific to that source were ranked in order of preference, with ''Methodology Rank 1'' being the preferred method, followed by ''Methodology Rank 2,'' and so on. Refinery owners and operators were requested through the ICR to use the highest ranked method (with Methodology Rank 1 being the highest) for which data were available. Methodology Ranks 1 or 2 generally relied on continuous emission measurements. When continuous measurement data were not available, engineering calculations or site-specific emission factors (Methodology Ranks 3 and 4) were specified in the protocol by EPA; these methods generally needed periodic, site-specific measurements. When site-specific measurement or test data were not available, default emission factors (Methodology Rank 5) were provided in the protocol by EPA.

As we reviewed the ICR-submitted emissions inventories, we determined that, in some cases, refiners either did not follow the protocol methodology or made an error in their calculations. This was evident because pollutants that we expected to be reported from certain emission sources were either not reported or were reported in amounts that were not consistent with the protocol methodology. In these cases, we contacted the refineries and, based on their replies, made corrections to emission estimates. The original Component 2 submittals, documentation of the changes as a result of our review, and the final emissions inventories we relied on for our analyses are available in the technical memorandum entitled *Emissions Data Quality Memorandum and Development of the Risk Model Input File,* in Docket ID Number EPA–HQ–OAR–2010–0682.

Collected emissions test data (test reports, continuous emissions monitoring system (CEMS) data and other continuous monitoring system data) were used to assess the effectiveness of existing control measures, to fill data gaps and to examine variability in emissions. The ICR requested source testing for a total of 90 specific process units at 75 particular refineries across the industry. We received a total of 72 source tests; in some cases, refinery sources claimed that units we requested to be tested were no longer in operation, did not exist or did not have an emission point to the atmosphere (this was the case for hydrocrackers). In other cases, refiners claimed they were not able to conduct testing because of process characteristics. For example, source testing of DCU proved to be difficult because the moisture content of the steam vent required a significant amount of gas to be sampled to account for dilution. Venting periods of less than 20 minutes did not accommodate this strategy and, therefore, if refiners vented for less than 20 minutes, they did not sample their steam vent. As a result, only two DCU tests out of eight requested were received as part of Component 4. Results of the stack test data are compiled and available in Docket ID Number EPA–HQ–OAR–2010–0682.

D. What other relevant background information and data are available?

Over the past several years, the EPA has worked with the Texas Commission on Environmental Quality and industry representatives to better characterize proper flare performance. Flares are used to control emissions from various vents at refineries as well as at other types of facilities not in the petroleum refinery source categories, such as chemical and petrochemical manufacturing facilities. In April 2012, we released a technical report for peer review that discussed our observations regarding the operation and performance of flares. The report was a result of the analysis of several flare efficiency studies and flare performance test reports. To provide an objective evaluation of our analysis, we asked a third party to facilitate an ad hoc peer review process of the technical report. This third party established a balanced peer review panel of reviewers from outside the EPA. These reviewers consisted of individuals that could be considered ''technical combustion experts'' within four interest groups: the refinery industry, industrial flare consultants, academia, and environmental stakeholders.

The EPA developed a charge statement with ten charge questions for the review panel. The peer reviewers were asked to perform a thorough review of the technical report and answer the charge questions to the extent possible, based on their technical expertise. The details of the peer review process and the charge questions, as well as comments received from the peer review process, were posted online to the Consolidated Petroleum Refinery Rulemaking Repository at the EPA's Technology Transfer Network Air Toxics Web site (see *http://www.epa.gov/ttn/atw/petref.html*). These items are also provided in a memorandum entitled *Peer Review of ''Parameters for Properly Designed and Operated Flares''* (see Docket ID Number EPA–HQ–OAR–2010–0682). After considering the comments received from the peer review process, we developed a final technical memorandum (see technical memorandum, *Flare Performance Data: Summary of Peer Review Comments and Additional Data Analysis for Steam-*

Assisted Flares, in Docket ID Number EPA–HQ–OAR–2010–0682).

III. Analytical Procedures

In this section, we describe the analyses performed to support the proposed decisions for the RTR and other issues addressed in this proposal.

A. How did we estimate post-MACT risks posed by the source categories?

The EPA conducted a risk assessment that provided estimates of the MIR posed by the HAP emissions from each source in the source categories, the hazard index (HI) for chronic exposures to HAP with the potential to cause non-cancer health effects, and the hazard quotient (HQ) for acute exposures to HAP with the potential to cause non-cancer health effects. The assessment also provided estimates of the distribution of cancer risks within the exposed populations, cancer incidence and an evaluation of the potential for adverse environmental effects for each source category. The eight sections that follow this paragraph describe how we estimated emissions and conducted the risk assessment. The docket for this rulemaking (Docket ID Number EPA–HQ–OAR–2010–0682) contains the following document which provides more information on the risk assessment inputs and models: *Draft Residual Risk Assessment for the Petroleum Refining Source Sector.* The methods used to assess risks (as described in the eight primary steps below) are consistent with those peer-reviewed by a panel of the EPA's Science Advisory Board (SAB) in 2009 and described in their peer review report issued in 2010 [3]; they are also consistent with the key recommendations contained in that report.

1. How did we estimate actual emissions and identify the emissions release characteristics?

We compiled data sets using the ICR emission inventory submittals as a starting point. The data sets were refined following an extensive quality assurance check of source locations, emission release characteristics, annual emission estimates and FCCU release parameters. They were then updated based on additional information received from refineries. In addition, we supplemented these data with results from stack testing, which were required later than the inventories under the ICR. As the stack test information was received, we compared these data against the refined emission inventories and the default emission factors provided in the *Emission Estimation Protocol for Petroleum Refineries* (Docket Item Number EPA–HQ–OAR–2010–0682–0060).

Based on the stack test data for FCCU, we calculated that, on average, HCN emissions were a factor of 10 greater than the average emission factor of 770 pounds per barrel FCCU feed provided in the protocol. Therefore, we revised the HCN emissions for FCCU in the emissions inventory used for the risk modeling runs (the results are presented in this preamble). For the 10 facilities that performed a stack test to determine HCN emissions from their FCCU, we used the actual emissions measured during the stack tests in place of the inventories originally supplied in response to the ICR. For those facilities that did not perform a stack test, but reported HCN emissions in the emissions inventory portion of the ICR, we increased the emissions of HCN by a factor of 10, assuming the original emission inventory estimates for FCCU HCN emissions were based on the default emission factor in the protocol. The emissions inventory from the ICR and documentation of the changes made to the file as a result of our review are contained in the technical memorandum entitled *Emissions Data Quality Memorandum and Development of the Risk Model Input File,* in Docket ID Number EPA–HQ–OAR–2010–0682 and available on our Web site.[4]

2. How did we estimate MACT-allowable emissions?

The available emissions data in the RTR dataset (*i.e.,* the emissions inventory) include estimates of the mass of HAP emitted during the specified annual time period. In some cases, these ''actual'' emission levels are lower than the emission levels required to comply with the MACT standards. The emissions level allowed to be emitted by the MACT standards is referred to as the ''MACT-allowable'' emissions level. We discussed the use of both MACT-allowable and actual emissions in the final Coke Oven Batteries residual risk rule (70 FR 19998–19999, April 15, 2005) and in the proposed and final Hazardous Organic NESHAP residual risk rules (71 FR 34428, June 14, 2006, and 71 FR 76609, December 21, 2006, respectively). In those previous actions, we noted that assessing the risks at the MACT-allowable level is inherently reasonable since these risks reflect the maximum level facilities could emit and still comply with national emission standards. We also explained that it is reasonable to consider actual emissions, where such data are available, in both steps of the risk analysis, in accordance with the Benzene NESHAP approach. (54 FR 38044, September 14, 1989.)

We requested allowable emissions data in the ICR. However, unlike for actual emissions, where the ICR specified the use of the *Emission Estimation Protocol for Petroleum Refineries* (available as Docket Item Number EPA–HQ–OAR–2010–0682–0060), we did not specify a method to calculate allowable emissions. As a result, in our review of these data and when comparing estimates between facilities, we found that facilities did not estimate allowable emissions consistently across the industry. In addition, facilities failed to report allowable emissions for many emission points, likely because they did not know how to translate a work practice or performance standard into an allowable emission estimate and they did not know how to speciate individual HAP where the MACT standard is based on a surrogate, such as PM or VOC. Therefore, the ICR-submitted information for allowable emissions did not include emission estimates for all HAP and sources of interest. Consequently, we used our Refinery Emissions Model (REM Model) to estimate allowable emissions. The REM model relies on model plants that vary based on throughput capacity. Each model plant contains process-specific default emission factors, adjusted for compliance with the Refinery MACT 1 and 2 emission standards.

The risks associated with the allowable emissions were evaluated using the same dispersion modeling practices, exposure assumptions and health benchmarks as the actual risks. However, because each refinery's allowable emissions were calculated by using model plants, selected based on each refinery's actual capacities and throughputs, emission estimates for point sources are not specific to a particular latitude/longitude location. Therefore, for risk modeling purposes, all allowable emissions were assumed to be released from the centroid of the facility. (Note: for fugitive (area) sources, the surface area was selected by the size of the model plant and the release point was shifted to the southwest so the center of the fugitive area was near the centroid of the facility). The emission and risk estimates for the actual emission inventory were compared to the

[3] U.S. EPA SAB. *Risk and Technology Review (RTR) Risk Assessment Methodologies: For Review by the EPA's Science Advisory board with Case Studies—MACT I Petroleum Refining Sources and Portland Cement Manufacturing,* May 2010.

[4] The emissions inventory and the revised emissions modeling file can also be found at *http://www.epa.gov/ttn/atw/petref.htm.*

allowable emissions and risk estimates. For most work practices, where allowable emission estimates are difficult to predict, the actual risk estimates were higher than those projected using the REM Model estimates. Consequently, we post-processed the two risk files, taking the higher risk estimates from the actual emissions inventory for sources subject to work practice standards, such as process equipment leaks, and sources that were not covered in the REM Model, combining them with the risk estimates from sources with more readily determined allowable emissions. The combined post-processed allowable risk estimates provide a high estimate of the risk allowed under Refinery MACT 1 and 2. The REM Model assumptions and emission estimates, along with the post-processing of risk estimate results that produced the final risk estimates for the allowable emissions, are provided in the docket (see *Refinery Emissions and Risk Estimates for Modeled ''Allowable'' Emissions* in Docket ID Number EPA–HQ–OAR–2010–0682).

3. How did we conduct dispersion modeling, determine inhalation exposures and estimate individual and population inhalation risks?

Both long-term and short-term inhalation exposure concentrations and health risks from the source categories addressed in this proposal were estimated using the Human Exposure Model (Community and Sector HEM–3 version 1.1.0). The HEM–3 performs three primary risk assessment activities: (1) Conducting dispersion modeling to estimate the concentrations of HAP in ambient air, (2) estimating long-term and short-term inhalation exposures to individuals residing within 50 kilometers (km) of the modeled sources [5], and (3) estimating individual and population-level inhalation risks using the exposure estimates and quantitative dose-response information.

The air dispersion model used by the HEM–3 model (AERMOD) is one of the EPA's preferred models for assessing pollutant concentrations from industrial facilities.[6] To perform the dispersion modeling and to develop the preliminary risk estimates, HEM–3 draws on three data libraries. The first is a library of meteorological data, which is used for dispersion calculations. This library includes 1 year (2011) of hourly surface and upper air observations for 824 meteorological stations, selected to provide coverage of the United States and Puerto Rico. A second library of United States Census Bureau census block [7] internal point locations and populations provides the basis of human exposure calculations (U.S. Census, 2010). In addition, for each census block, the census library includes the elevation and controlling hill height, which are also used in dispersion calculations. A third library of pollutant unit risk factors and other health benchmarks is used to estimate health risks. These risk factors and health benchmarks are the latest values recommended by the EPA for HAP and other toxic air pollutants. These values are available at: *http://www.epa.gov/ttn/atw/toxsource/summary.html* and are discussed in more detail later in this section.

In developing the risk assessment for chronic exposures, we used the estimated annual average ambient air concentrations of each HAP emitted by each source for which we have emissions data in the source category. The air concentrations at each nearby census block centroid were used as a surrogate for the chronic inhalation exposure concentration for all the people who reside in that census block. We calculated the MIR for each facility as the cancer risk associated with a continuous lifetime (24 hours per day, 7 days per week, and 52 weeks per year for a 70-year period) exposure to the maximum concentration at the centroid of inhabited census blocks. Individual cancer risks were calculated by multiplying the estimated lifetime exposure to the ambient concentration of each of the HAP (in micrograms per cubic meter ($\mu g/m^3$)) by its unit risk estimate (URE). The URE is an upper bound estimate of an individual's probability of contracting cancer over a lifetime of exposure to a concentration of 1 microgram of the pollutant per cubic meter of air. For residual risk assessments, we generally use URE values from the EPA's Integrated Risk Information System (IRIS). For carcinogenic pollutants without EPA IRIS values, we look to other reputable sources of cancer dose-response values, often using California EPA (CalEPA) URE values, where available. In cases where new, scientifically credible dose-response values have been developed in a manner consistent with the EPA guidelines and have undergone a peer review process similar to that used by the EPA, we may use such dose-response values in place of, or in addition to, other values, if appropriate.

We note here that several carcinogens emitted by facilities in these source categories have a mutagenic mode of action. For these compounds, we applied the age-dependent adjustment factors (ADAF) described in the EPA's *Supplemental Guidance for Assessing Susceptibility from Early-Life Exposure to Carcinogens.*[8] This adjustment has the effect of increasing the estimated lifetime risks for these pollutants by a factor of 1.6. Although only a small fraction of the total polycyclic organic matter (POM) emissions were reported as individual compounds, the EPA expresses carcinogenic potency of POM relative to the carcinogenic potency of benzo[a]pyrene, based on evidence that carcinogenic POM have the same mutagenic mode of action as does benzo[a]pyrene. The EPA's Science Policy Council recommends applying the ADAF to all carcinogenic polycyclic aromatic hydrocarbons (PAH) for which risk estimates are based on potency relative to benzo[a]pyrene. Accordingly, we have applied the ADAF to the benzo[a]pyrene-equivalent mass portion of all POM mixtures.

The EPA estimated incremental individual lifetime cancer risks associated with emissions from the facilities in the source categories as the sum of the risks for each of the carcinogenic HAP (including those classified as carcinogenic to humans, likely to be carcinogenic to humans, and suggestive evidence of carcinogenic potential [9]) emitted by the modeled sources. Cancer incidence and the distribution of individual cancer risks for the population within 50 km of the sources were also estimated for the source categories as part of this assessment by summing individual risks. A distance of 50 km is consistent with both the analysis supporting the

[5] This metric comes from the Benzene NESHAP. See 54 FR 38046, September 14, 1989.

[6] U.S. EPA. Revision to the *Guideline on Air Quality Models: Adoption of a Preferred General Purpose (Flat and Complex Terrain) Dispersion Model and Other Revisions* (70 FR 68218, November 9, 2005).

[7] A census block is the smallest geographic area for which census statistics are tabulated.

[8] *Supplemental Guidance for Assessing Susceptibility from Early-Life Exposure to Carcinogens.* Risk Assessment Forum, U.S. Environmental Protection Agency, Washington, DC. EPA/630/R–03/003F. March 2005. Available at *http://www.epa.gov/ttn/atw/childrens_supplement_final.pdf.*

[9] These classifications also coincide with the terms ''known carcinogen, probable carcinogen, and possible carcinogen,'' respectively, which are the terms advocated in the EPA's previous *Guidelines for Carcinogen Risk Assessment,* published in 1986 (51 FR 33992, September 24, 1986). Summing the risks of these individual compounds to obtain the cumulative cancer risks is an approach that was recommended by the EPA's SAB in their 2002 peer review of EPA's National Air Toxics Assessment (NATA) entitled, *NATA—Evaluating the National-scale Air Toxics Assessment 1996 Data—an SAB Advisory,* available at: *http://yosemite.epa.gov/sab/sabproduct.nsf/214C6E915BB04E14852570CA007A682C/$File/ecadv02001.pdf.*

1989 Benzene NESHAP (54 FR 38044, September 14, 1989) and the limitations of Gaussian dispersion models, including AERMOD.

To assess the risk of non-cancer health effects from chronic exposures, we summed the HQ for each of the HAP that affects a common target organ system to obtain the HI for that target organ system (or target organ-specific HI, TOSHI). The HQ is the estimated exposure divided by the chronic reference level, which is a value selected from one of several sources. First, the chronic reference level can be the EPA Reference Concentration (RfC) (*http://www.epa.gov/riskassessment/glossary.htm*), defined as ''an estimate (with uncertainty spanning perhaps an order of magnitude) of a continuous inhalation exposure to the human population (including sensitive subgroups) that is likely to be without an appreciable risk of deleterious effects during a lifetime.'' Alternatively, in cases where an RfC from the EPA's IRIS database is not available or where the EPA determines that using a value other than the RfC is appropriate, the chronic reference level can be a value from the following prioritized sources: (1) The Agency for Toxic Substances and Disease Registry Minimum Risk Level (*http://www.atsdr.cdc.gov/mrls/index.asp*), which is defined as ''an estimate of daily human exposure to a hazardous substance that is likely to be without an appreciable risk of adverse non-cancer health effects (other than cancer) over a specified duration of exposure''; (2) the CalEPA Chronic Reference Exposure Level (REL) (*http://www.oehha.ca.gov/air/hot_spots/pdf/HRAguidefinal.pdf*), which is defined as ''the concentration level (that is expressed in units of $\mu g/m^3$ for inhalation exposure and in a dose expressed in units of milligram per kilogram per day (mg/kg-day) for oral exposures), at or below which no adverse health effects are anticipated for a specified exposure duration''; or (3), as noted above, a scientifically credible dose-response value that has been developed in a manner consistent with the EPA guidelines and has undergone a peer review process similar to that used by the EPA, in place of or in concert with other values.

The EPA also evaluated screening estimates of acute exposures and risks for each of the HAP at the point of highest off-site exposure for each facility (*i.e.,* not just the census block centroids), assuming that a person is located at this spot at a time when both the peak (hourly) emissions rate and worst-case dispersion conditions occur. The acute HQ is the estimated acute exposure divided by the acute dose-response value. In each case, the EPA calculated acute HQ values using best available, short-term dose-response values. These acute dose-response values, which are described below, include the acute REL, acute exposure guideline levels (AEGL) and emergency response planning guidelines (ERPG) for 1-hour exposure durations. As discussed below, we used realistic assumptions based on knowledge of the emission point release characteristics for emission rates, and conservative assumptions for meteorology and exposure location for our acute analysis.

As described in the *CalEPA's Air Toxics Hot Spots Program Risk Assessment Guidelines, Part I, The Determination of Acute Reference Exposure Levels for Airborne Toxicants,* an acute REL value (*http://www.oehha.ca.gov/air/pdf/acuterel.pdf*) is defined as ''the concentration level at or below which no adverse health effects are anticipated for a specified exposure duration.'' *Id.* at page 2. Acute REL values are based on the most sensitive, relevant, adverse health effect reported in the peer-reviewed medical and toxicological literature. Acute REL values are designed to protect the most sensitive individuals in the population through the inclusion of margins of safety. Because margins of safety are incorporated to address data gaps and uncertainties, exceeding the REL value does not automatically indicate an adverse health impact.

AEGL values were derived in response to recommendations from the National Research Council (NRC). As described in *Standing Operating Procedures (SOP) of the National Advisory Committee on Acute Exposure Guideline Levels for Hazardous Substances* (*http://www.epa.gov/oppt/aegl/pubs/sop.pdf*),[10] ''the NRC's previous name for acute exposure levels—community emergency exposure levels—was replaced by the term AEGL to reflect the broad application of these values to planning, response, and prevention in the community, the workplace, transportation, the military, and the remediation of Superfund sites.'' *Id.* at 2.

This document also states that AEGL values ''represent threshold exposure limits for the general public and are applicable to emergency exposures ranging from 10 minutes to eight hours.'' *Id.* at 2. The document lays out the purpose and objectives of AEGL by stating that ''the primary purpose of the AEGL program and the National Advisory Committee for Acute Exposure Guideline Levels for Hazardous Substances is to develop guideline levels for once-in-a-lifetime, short-term exposures to airborne concentrations of acutely toxic, high-priority chemicals.'' *Id.* at 21. In detailing the intended application of AEGL values, the document states that ''[i]t is anticipated that the AEGL values will be used for regulatory and nonregulatory purposes by U.S. Federal and state agencies and possibly the international community in conjunction with chemical emergency response, planning and prevention programs. More specifically, the AEGL values will be used for conducting various risk assessments to aid in the development of emergency preparedness and prevention plans, as well as real-time emergency response actions, for accidental chemical releases at fixed facilities and from transport carriers.'' *Id.* at 31.

The AEGL–1 value is then specifically defined as ''the airborne concentration (expressed as ppm (parts per million) or mg/m^3 (milligrams per cubic meter)) of a substance above which it is predicted that the general population, including susceptible individuals, could experience notable discomfort, irritation, or certain asymptomatic nonsensory effects. However, the effects are not disabling and are transient and reversible upon cessation of exposure.'' *Id.* at 3. The document also notes that, ''Airborne concentrations below AEGL–1 represent exposure levels that can produce mild and progressively increasing but transient and nondisabling odor, taste, and sensory irritation or certain asymptomatic, nonsensory effects.'' *Id.* Similarly, the document defines AEGL–2 values as ''the airborne concentration (expressed as parts per million or milligrams per cubic meter) of a substance above which it is predicted that the general population, including susceptible individuals, could experience irreversible or other serious, long-lasting adverse health effects or an impaired ability to escape.'' *Id.*

ERPG values are derived for use in emergency response, as described in the American Industrial Hygiene Association's ERP Committee document entitled, ERPGS Procedures and Responsibilities, which states that, ''Emergency Response Planning Guidelines were developed for emergency planning and are intended as health-based guideline concentrations for single exposures to

[10] National Academy of Sciences (NAS), 2001. *Standing Operating Procedures for Developing Acute Exposure Levels for Hazardous Chemicals,* page 2.

chemicals.''[11] *Id.* at 1. The ERPG–1 value is defined as ''the maximum airborne concentration below which it is believed that nearly all individuals could be exposed for up to 1 hour without experiencing other than mild transient adverse health effects or without perceiving a clearly defined, objectionable odor.'' *Id.* at 2. Similarly, the ERPG–2 value is defined as ''the maximum airborne concentration below which it is believed that nearly all individuals could be exposed for up to one hour without experiencing or developing irreversible or other serious health effects or symptoms which could impair an individual's ability to take protective action.'' *Id.* at 1.

As can be seen from the definitions above, the AEGL and ERPG values include the similarly-defined severity levels 1 and 2. For many chemicals, a severity level 1 value AEGL or ERPG has not been developed because the types of effects for these chemicals are not consistent with the AEGL–1/ERPG–1 definitions; in these instances, we compare higher severity level AEGL–2 or ERPG–2 values to our modeled exposure levels to screen for potential acute concerns. When AEGL–1/ERPG–1 values are available, they are used in our acute risk assessments.

Acute REL values for 1-hour exposure durations are typically lower than their corresponding AEGL–1 and ERPG–1 values. Even though their definitions are slightly different, AEGL–1 values are often the same as the corresponding ERPG–1 values, and AEGL–2 values are often equal to ERPG–2 values. Maximum HQ values from our acute screening risk assessments typically result when basing them on the acute REL value for a particular pollutant. In cases where our maximum acute HQ value exceeds 1, we also report the HQ value based on the next highest acute dose-response value (usually the AEGL–1 and/or the ERPG–1 value).

To develop screening estimates of acute exposures in the absence of hourly emissions data, generally we first develop estimates of maximum hourly emissions rates by multiplying the average actual annual hourly emissions rates by a default factor to cover routinely variable emissions. However, for the petroleum refineries category, we incorporated additional information and process knowledge in order to better characterize acute emissions, as described below. The ICR included input fields for both annual emissions and maximum hourly emissions. The maximum hourly emission values were often left blank or appeared to be reported in units other than those required for this emissions field (pounds per hour). Consequently, instead of relying on the inadequate data provided in response to the ICR, we elected to estimate the hourly emissions based on the reported annual emissions (converted to average hourly emissions in terms of pounds per hour) and then to apply an escalation factor, considering the different types of emission sources and their inherent variability, in order to calculate maximum hourly rates. For sources with relatively continuous operations and steady state emissions, such as FCCU, sulfur recovery plants, and continuous catalytic reformers, a factor of 2 was used to estimate the maximum hourly rates from the average hourly emission rates. For sources with relatively continuous emissions, but with more variability, like storage tanks and wastewater systems, a factor of 4 was used to estimate the maximum hourly rates from the average hourly emission rates. For non-continuous emission sources with more variability, such as DCU, cyclic CRU, semi-regenerative CRU, and transfer and loading operations, the number of hours in the venting cycle and the variability of emissions expected in that cycle were used to determine the escalation factor for each emissions source. The escalation factors for these processes range from 10 to 60. For more detail regarding escalation factors and the rationale for their selection, see *Derivation of Hourly Emission Rates for Petroleum Refinery Emission Sources Used in the Acute Risk Analysis,* available in the docket for this rulemaking (Docket ID Number EPA–HQ–OAR–2010–0682).

As part of our acute risk assessment process, for cases where acute HQ values from the screening step were less than or equal to 1 (even under the conservative assumptions of the screening analysis), acute impacts were deemed negligible and no further analysis was performed. In cases where an acute HQ from the screening step was greater than 1, additional site-specific data were considered to develop a more refined estimate of the potential for acute impacts of concern. For these source categories, the data refinements employed consisted of using the site-specific facility layout to distinguish facility property from an area where the public could be exposed. These refinements are discussed more fully in the *Draft Residual Risk Assessment for the Petroleum Refining Source Sector,* which is available in the docket for this rulemaking (Docket ID Number EPA–HQ–OAR–2010–0682). Ideally, we would prefer to have continuous measurements over time to see how the emissions vary by each hour over an entire year. Having a frequency distribution of hourly emissions rates over a year would allow us to perform a probabilistic analysis to estimate potential threshold exceedances and their frequency of occurrence. Such an evaluation could include a more complete statistical treatment of the key parameters and elements adopted in this screening analysis. Recognizing that this level of data is rarely available, we instead rely on the multiplier approach.

To better characterize the potential health risks associated with estimated acute exposures to HAP, and in response to a key recommendation from the SAB's peer review of the EPA's RTR risk assessment methodologies,[12] we generally examine a wider range of available acute health metrics (*e.g.,* REL, AEGL) than we do for our chronic risk assessments. This is in response to the SAB's acknowledgement that there are generally more data gaps and inconsistencies in acute reference values than there are in chronic reference values. In some cases, *e.g.,* when Reference Value Arrays[13] for HAP have been developed, we consider additional acute values (*i.e.,* occupational and international values) to provide a more complete risk characterization.

4. How did we conduct the multipathway exposure and risk screening?

The EPA conducted a screening analysis examining the potential for significant human health risks due to exposures via routes other than inhalation (*i.e.,* ingestion). We first determined whether any sources in the source categories emitted any hazardous air pollutants known to be persistent and bio-accumulative in the environment (PB–HAP). The PB–HAP compounds or compound classes are

[11] *ERP Committee Procedures and Responsibilities.* November 1, 2006. American Industrial Hygiene Association. Available at *https://www.aiha.org/get-involved/AIHAGuidelineFoundation/EmergencyResponsePlanningGuidelines/Documents/ERP-SOPs2006.pdf.*

[12] The SAB peer review of RTR Risk Assessment Methodologies is available at: *http://yosemite.epa.gov/sab/sabproduct.nsf/4AB3966E263D943A8525771F00668381/$File/EPA-SAB-10-007-unsigned.pdf.*

[13] U.S. EPA. (2009) Chapter 2.9 Chemical Specific Reference Values for Formaldehyde in Graphical Arrays of Chemical-Specific Health Effect Reference Values for Inhalation Exposures (Final Report). U.S. Environmental Protection Agency, Washington, DC, EPA/600/R–09/061, and available on-line at *http://cfpub.epa.gov/ncea/cfm/recordisplay.cfm?deid=211003.*

identified for the screening from the EPA's Air Toxics Risk Assessment Library (available at *http://www.epa.gov/ttn/fera/risk_atra_vol1.html*).

For the petroleum refinery source categories, we identified emissions of cadmium compounds, chlorinated dibenzodioxins and furans (CDDF), lead compounds, mercury compounds, polychlorinated biphenyls (PCB), and polycylic organic matter (POM). Because PB–HAP are emitted by at least one facility, we proceeded to the second step of the evaluation. In this step, we determined whether the facility-specific emission rates of each of the emitted PB–HAP were large enough to create the potential for significant non-inhalation human health risks under reasonable worst-case conditions. To facilitate this step, we developed emissions rate screening levels for each PB–HAP using a hypothetical upper-end screening exposure scenario developed for use in conjunction with the EPA's ''Total Risk Integrated Methodology. Fate, Transport, and Ecological Exposure'' (TRIM.FaTE) model. We conducted a sensitivity analysis on the screening scenario to ensure that its key design parameters would represent the upper end of the range of possible values, such that it would represent a conservative but not impossible scenario. The facility-specific emissions rates of each of the PB–HAP were compared to their corresponding emission rate screening values to assess the potential for significant human health risks via non-inhalation pathways. We call this application of the TRIM.FaTE model the Tier I TRIM- Screen or Tier I screen.

For the purpose of developing emissions rates for our Tier I TRIM-Screen, we derived emission levels for each PB–HAP (other than lead) at which the maximum excess lifetime cancer risk would be 1-in-1 million or, for HAP that cause non-cancer health effects, the maximum HQ would be 1. If the emissions rate of any PB–HAP exceeds the Tier I screening emissions rate for any facility, we conduct a second screen, which we call the Tier II TRIM-screen or Tier II screen. In the Tier II screen, the location of each facility that exceeded the Tier I emission rate is used to refine the assumptions associated with the environmental scenario while maintaining the exposure scenario assumptions. We then adjust the risk-based Tier I screening level for each PB–HAP for each facility based on an understanding of how exposure concentrations estimated for the screening scenario change with meteorology and environmental assumptions. PB–HAP emissions that do not exceed these new Tier II screening levels are considered to pose no unacceptable risks. When facilities exceed the Tier II screening levels, it does not mean that multi-pathway impacts are significant, only that we cannot rule out that possibility based on the results of the screen. These facilities may be further evaluated for multi-pathway risks using the TRIM.FaTE model.

In evaluating the potential for multi-pathway risk from emissions of lead compounds, rather than developing a screening emissions rate for them, we compared modeled maximum estimated chronic inhalation exposures with the level of the current National Ambient Air Quality Standards (NAAQS) for lead.[14] Values below the level of the primary (health-based) lead NAAQS were considered to have a low potential for multi-pathway risk.

For further information on the multi-pathway analysis approach, see the *Draft Residual Risk Assessment for the Petroleum Refining Source Sector,* which is available in the docket for this action (Docket ID Number EPA–HQ–OAR–2010–0682).

5. How did we assess risks considering emissions control options?

In addition to assessing baseline inhalation risks and screening for potential multipathway risks, we also estimated risks considering the potential emission reductions that would be achieved by the control options under consideration. We used the same emissions inventory that we used for the risk modeling and applied emission reduction estimates for the control options we are proposing to calculate the post-control risk. We note that for storage vessels, in response to the ICR some facilities reported emissions for their tank farm or a group of storage vessels rather than for each individual storage vessel. In order to calculate emissions for each storage vessel, we used unit-specific data from the ICR to estimate the pre- and post-control emissions based on the operating characteristics and controls reported for each unit. For example, HAP emissions from each storage vessel were estimated based on the size, contents, and controls reported for that storage vessel. If additional controls would be necessary to comply with proposed requirements for storage vessels, the HAP emissions were again estimated based on the upgraded controls. The pre- and post-control emissions were summed across all storage vessels at the facility to determine a facility-specific emission reduction factor. The facility-specific emission reduction factor was then used to adjust the emissions for each of the pollutants reported for storage vessels at that facility to account for the post-control emissions. In this manner, the expected emission reductions were applied to the specific HAP and emission points in the source category dataset to develop corresponding estimates of risk and incremental risk reductions. The resulting emission file used for post-control risk analysis is available in the docket for this action (Docket ID Number EPA–HQ–OAR–2010–0682).

6. How did we conduct the environmental risk screening assessment?

a. Adverse Environmental Effect

The EPA has developed a screening approach to examine the potential for adverse environmental effects as required under section 112(f)(2)(A) of the CAA. Section 112(a)(7) of the CAA defines ''adverse environmental effect'' as ''any significant and widespread adverse effect, which may reasonably be anticipated, to wildlife, aquatic life, or other natural resources, including adverse impacts on populations of endangered or threatened species or significant degradation of environmental quality over broad areas.''

b. Environmental HAP

The EPA focuses on seven HAP, which we refer to as ''environmental HAP,'' in its screening analysis: five PB–HAP and two acid gases. The five PB–HAP are cadmium, dioxins/furans, POM, mercury (both inorganic mercury and methyl mercury) and lead compounds. The two acid gases are HCl and HF. The rationale for including these seven HAP in the environmental risk screening analysis is presented below.

HAP that persist and bioaccumulate are of particular environmental concern because they accumulate in the soil, sediment and water. The PB–HAP are

[14] In doing so, EPA notes that the legal standard for a primary NAAQS—that a standard is requisite to protect public health and provide an adequate margin of safety (CAA Section 109(b))—differs from the Section 112(f) standard (requiring among other things that the standard provide an ''ample margin of safety''). However, the lead NAAQS is a reasonable measure of determining risk acceptability (*i.e.,* the first step of the Benzene NESHAP analysis) since it is designed to protect the most susceptible group in the human population—children, including children living near major lead emitting sources. 73 FR 67002/3; 73 FR 67000/3; 73 FR 67005/1, November 12, 2008. In addition, applying the level of the primary lead NAAQS at the risk acceptability step is conservative, since that primary lead NAAQS reflects an adequate margin of safety.

taken up, through sediment, soil, water, and/or ingestion of other organisms, by plants or animals (*e.g.,* small fish) at the bottom of the food chain. As larger and larger predators consume these organisms, concentrations of the PB–HAP in the animal tissues increases as does the potential for adverse effects. The five PB–HAP we evaluate as part of our screening analysis account for 99.8 percent of all PB–HAP emissions nationally from stationary sources (on a mass basis from the 2005 National Emissions Inventory (NEI)).

In addition to accounting for almost all of the mass of PB–HAP emitted, we note that the TRIM.Fate model that we use to evaluate multipathway risk allows us to estimate concentrations of cadmium compounds, dioxins/furans, POM and mercury in soil, sediment and water. For lead compounds, we currently do not have the ability to calculate these concentrations using the TRIM.Fate model. Therefore, to evaluate the potential for adverse environmental effects from lead, we compare the estimated HEM-modeled exposures from the source category emissions of lead with the level of the secondary NAAQS for lead.[15] We consider values below the level of the secondary lead NAAQS to be unlikely to cause adverse environmental effects.

Due to their well-documented potential to cause direct damage to terrestrial plants, we include two acid gases, HCl and HF, in the environmental screening analysis. According to the 2005 NEI, HCl and HF account for about 99 percent (on a mass basis) of the total acid gas HAP emitted by stationary sources in the U.S. In addition to the potential to cause direct damage to plants, high concentrations of HF in the air have been linked to fluorosis in livestock. Air concentrations of these HAP are already calculated as part of the human multipathway exposure and risk screening analysis using the HEM3–AERMOD air dispersion model, and we are able to use the air dispersion modeling results to estimate the potential for an adverse environmental effect.

The EPA acknowledges that other HAP beyond the seven HAP discussed above may have the potential to cause adverse environmental effects. Therefore, the EPA may include other relevant HAP in its environmental risk screening in the future, as modeling science and resources allow. The EPA invites comment on the extent to which other HAP emitted by the source categories may cause adverse environmental effects. Such information should include references to peer-reviewed ecological effects benchmarks that are of sufficient quality for making regulatory decisions, as well as information on the presence of organisms located near facilities within the source categories that such benchmarks indicate could be adversely affected.

c. Ecological Assessment Endpoints and Benchmarks for PB–HAP

An important consideration in the development of the EPA's screening methodology is the selection of ecological assessment endpoints and benchmarks. Ecological assessment endpoints are defined by the ecological entity (*e.g.,* aquatic communities including fish and plankton) and its attributes (*e.g.,* frequency of mortality). Ecological assessment endpoints can be established for organisms, populations, communities or assemblages, and ecosystems.

For PB–HAP, we evaluated the following community-level ecological assessment endpoints to screen for organisms directly exposed to HAP in soils, sediment and water:

- Local terrestrial communities (*i.e.,* soil invertebrates, plants) and populations of small birds and mammals that consume soil invertebrates exposed to PB–HAP in the surface soil.
- Local benthic (*i.e.,* bottom sediment dwelling insects, amphipods, isopods and crayfish) communities exposed to PB–HAP in sediment in nearby water bodies.
- Local aquatic (water-column) communities (including fish and plankton) exposed to PB–HAP in nearby surface waters.

For PB–HAP, we also evaluated the following population-level ecological assessment endpoint to screen for indirect HAP exposures of top consumers via the bioaccumulation of HAP in food chains.

- Piscivorous (*i.e.,* fish-eating) wildlife consuming PB–HAP-contaminated fish from nearby water bodies.

For cadmium compounds, dioxins/furans, POM and mercury, we identified the available ecological benchmarks for each assessment endpoint. An ecological benchmark represents a concentration of HAP (*e.g.,* 0.77 micrograms of HAP per liter of water) that has been linked to a particular environmental effect level (*e.g.,* a no-observed-adverse-effect level (NOAEL)) through scientific study. For PB–HAP we identified, where possible, ecological benchmarks at the following effect levels:

- Probable effect level (PEL): Level above which adverse effects are expected to occur frequently.
- Lowest-observed-adverse-effect level (LOAEL): The lowest exposure level tested at which there are biologically significant increases in frequency or severity of adverse effects.
- No-observed-adverse-effect level (NOAEL): The highest exposure level tested at which there are no biologically significant increases in the frequency or severity of adverse effect.

We established a hierarchy of preferred benchmark sources to allow selection of benchmarks for each environmental HAP at each ecological assessment endpoint. In general, the EPA sources that are used at a programmatic level (*e.g.,* Office of Water, Superfund Program) were used, if available. If not, the EPA benchmarks used in regional programs (*e.g.,* Superfund) were used. If benchmarks were not available at a programmatic or regional level, we used benchmarks developed by other federal agencies (*e.g.,* NOAA) or state agencies.

Benchmarks for all effect levels are not available for all PB–HAP and assessment endpoints. In cases where multiple effect levels were available for a particular PB–HAP and assessment endpoint, we use all of the available effect levels to help us to determine whether ecological risks exist and, if so, whether the risks could be considered significant and widespread.

d. Ecological Assessment Endpoints and Benchmarks for Acid Gases

The environmental screening analysis also evaluated potential damage and reduced productivity of plants due to direct exposure to acid gases in the air. For acid gases, we evaluated the following ecological assessment endpoint:

- Local terrestrial plant communities with foliage exposed to acidic gaseous HAP in the air.

The selection of ecological benchmarks for the effects of acid gases on plants followed the same approach as for PB–HAP (*i.e.,* we examine all of the available chronic benchmarks). For HCl, the EPA identified chronic benchmark concentrations. We note that the benchmark for chronic HCl exposure to plants is greater than the reference concentration for chronic inhalation exposure for human health. This means

[15] The secondary lead NAAQS is a reasonable measure of determining whether there is an adverse environmental effect since it was established considering ''effects on soils, water, crops, vegetation, man-made materials, animals, wildlife, weather, visibility and climate, damage to and deterioration of property, and hazards to transportation, as well as effects on economic values and on personal comfort and well-being.''

that where EPA includes regulatory requirements to prevent an exceedance of the reference concentration for human health, additional analyses for adverse environmental effects of HCl would not be necessary.

For HF, EPA identified chronic benchmark concentrations for plants and evaluated chronic exposures to plants in the screening analysis. High concentrations of HF in the air have also been linked to fluorosis in livestock. However, the HF concentrations at which fluorosis in livestock occur are higher than those at which plant damage begins. Therefore, the benchmarks for plants are protective of both plants and livestock.

e. Screening Methodology

For the environmental risk screening analysis, the EPA first determined whether any petroleum refineries emitted any of the seven environmental HAP. For the petroleum refinery source categories, we identified emissions of cadmium, dioxins/furans, POM, mercury (both inorganic mercury and methyl mercury), lead, HCl and HF.

Because one or more of the seven environmental HAP evaluated are emitted by at least one petroleum refinery, we proceeded to the second step of the evaluation.

f. PB–HAP Methodology

For cadmium, mercury, POM and dioxins/furans, the environmental screening analysis consists of two tiers, while lead is analyzed differently as discussed earlier. In the first tier, we determined whether the maximum facility-specific emission rates of each of the emitted environmental HAP were large enough to create the potential for adverse environmental effects under reasonable worst-case environmental conditions. These are the same environmental conditions used in the human multipathway exposure and risk screening analysis.

To facilitate this step, TRIM.FaTE was run for each PB–HAP under hypothetical environmental conditions designed to provide conservatively high HAP concentrations. The model was set to maximize runoff from terrestrial parcels into the modeled lake, which in turn, maximized the chemical concentrations in the water, the sediments, and the fish. The resulting media concentrations were then used to back-calculate a screening threshold emission rate that corresponded to the relevant exposure benchmark concentration value for each assessment endpoint. To assess emissions from a facility, the reported emission rate for each PB–HAP was compared to the screening threshold emission rate for that PB–HAP for each assessment endpoint. If emissions from a facility do not exceed the Tier I threshold, the facility ''passes'' the screen, and therefore, is not evaluated further under the screening approach. If emissions from a facility exceed the Tier I threshold, we evaluate the facility further in Tier II.

In Tier II of the environmental screening analysis, the screening emission thresholds are adjusted to account for local meteorology and the actual location of lakes in the vicinity of facilities that did not pass the Tier I screen. The modeling domain for each facility in the Tier II analysis consists of eight octants. Each octant contains five modeled soil concentrations at various distances from the facility (5 soil concentrations × 8 octants = total of 40 soil concentrations per facility) and one lake with modeled concentrations for water, sediment and fish tissue. In the Tier II environmental risk screening analysis, the 40 soil concentration points are averaged to obtain an average soil concentration for each facility for each PB–HAP. For the water, sediment and fish tissue concentrations, the highest value for each facility for each pollutant is used. If emission concentrations from a facility do not exceed the Tier II threshold, the facility passes the screen, and is typically not evaluated further. If emissions from a facility exceed the Tier II threshold, the facility does not pass the screen and, therefore, may have the potential to cause adverse environmental effects. Such facilities are evaluated further to investigate factors such as the magnitude and characteristics of the area of exceedance.

g. Acid Gas Methodology

The environmental screening analysis evaluates the potential phytotoxicity and reduced productivity of plants due to chronic exposure to acid gases. The environmental risk screening methodology for acid gases is a single-tier screen that compares the average off-site ambient air concentration over the modeling domain to ecological benchmarks for each of the acid gases. Because air concentrations are compared directly to the ecological benchmarks, emission-based thresholds are not calculated for acid gases as they are in the ecological risk screening methodology for PB–HAP.

For purposes of ecological risk screening, EPA identifies a potential for adverse environmental effects to plant communities from exposure to acid gases when the average concentration of the HAP around a facility exceeds the LOAEL ecological benchmark. In such cases, we further investigate factors such as the magnitude and characteristics of the area of exceedance (*e.g.,* land use of exceedance area, size of exceedance area) to determine if there is an adverse environmental effect.

For further information on the environmental screening analysis approach, see section IV.C.5 of this preamble and the *Draft Residual Risk Assessment for the Petroleum Refining Source Sector,* which is available in the docket for this action (Docket ID Number EPA–HQ–OAR–2010–0682).

7. How did we conduct facility-wide assessments?

To put the source category risks in context, following the assessment approach outlined in the SAB (2010) review, we examine the risks from the entire ''facility,'' where the facility includes all HAP-emitting operations within a contiguous area and under common control. In other words, we examine the HAP emissions not only from the source category emission points of interest, but also emissions of HAP from all other emission sources at the facility for which we have data.

The emissions inventories provided in response to the ICR included emissions information for all emission sources at the facilities that are part of the refineries source categories. Generally, only a few emission sources located at refineries are not subject to either Refinery MACT 1 or 2; the most notable are boilers, process heaters and internal combustion engines, which are addressed by other MACT standards.

We analyzed risks due to the inhalation of HAP that are emitted ''facility-wide'' for the populations residing within 50 km of each facility, consistent with the methods used for the source category analysis described above. For these facility-wide risk analyses, the modeled source category risks were compared to the facility-wide risks to determine the portion of facility-wide risks that could be attributed to each of the source categories addressed in this proposal. We specifically examined the facility that was associated with the highest estimates of risk and determined the percentage of that risk attributable to the source category of interest. The *Draft Residual Risk Assessment for the Petroleum Refining Source Sector* available through the docket for this action (Docket ID Number EPA–HQ–OAR–2010–0682) provides the methodology and results of the facility-wide analyses, including all facility-wide risks and the percentage of source category contribution to facility-wide risks.

8. How did we consider uncertainties in risk assessment?

In the Benzene NESHAP we concluded that risk estimation uncertainty should be considered in our decision-making under the ample margin of safety framework. Uncertainty and the potential for bias are inherent in all risk assessments, including those performed for this proposal. Although uncertainty exists, we believe that our approach, which used conservative tools and assumptions, ensures that our decisions are health protective and environmentally protective. A brief discussion of the uncertainties in the emissions datasets, dispersion modeling, inhalation exposure estimates and dose-response relationships follows below. A more thorough discussion of these uncertainties is included in the *Draft Residual Risk Assessment for the Petroleum Refining Source Sector,* which is available in the docket for this action (Docket ID Number EPA–HQ–OAR–2010–0682).

a. Uncertainties in the Emission Datasets

Although the development of the RTR datasets involved quality assurance/quality control processes, the accuracy of emissions values will vary depending on the source of the data, the degree to which data are incomplete or missing, the degree to which assumptions made to complete the datasets are accurate, errors in emission estimates and other factors. The emission estimates considered in this analysis are annual totals for 2010, and they do not reflect short-term fluctuations during the course of a year or variations from year to year. The estimates of peak hourly emissions rates for the acute effects screening assessment were based on emission adjustment factors applied to the average annual hourly emission rates, which are intended to account for emission fluctuations due to normal facility operations.

As discussed previously, we attempted to provide a consistent framework for reporting of emissions information by developing the refinery emissions estimation protocol and requesting that refineries follow the protocol when reporting emissions inventory data in response to the ICR. This protocol, called *Emission Estimation Protocol for Petroleum Refineries,* is available in the docket for this rulemaking (Docket Item Number EPA–HQ–OAR–2010–0682–0060). Additionally, we developed our own estimates of emissions that are based on the factors provided in the protocol and the REM Model. We developed emission estimates based on refinery unit capacities, which also provided an estimate of allowable emissions. We then conducted risk modeling using REM Model estimates and by locating emissions at the centroid of each refinery in an attempt to understand the risk associated with emissions from each refinery. Therefore, even if there were errors in the emission inventories reported in the ICR, as was the case in many instances, emissions for those facilities were also modeled using the protocol emission factors. The risk modeling of allowable emissions based on emission factors and unit capacities did not result in significantly different risk results than the actual emissions modeling runs. Results of the allowable emissions risk estimates are provided in the *Draft Residual Risk Assessment for the Petroleum Refining Source Sector,* which is available in Docket ID Number EPA–HQ–OAR–2010–0682.

b. Uncertainties in Dispersion Modeling

We recognize there is uncertainty in ambient concentration estimates associated with any model, including the EPA's recommended regulatory dispersion model, AERMOD. In using a model to estimate ambient pollutant concentrations, the user chooses certain options to apply. For RTR assessments, we select some model options that have the potential to overestimate ambient air concentrations (*e.g.,* not including plume depletion or pollutant transformation). We select other model options that have the potential to underestimate ambient impacts (*e.g.,* not including building downwash). Other options that we select have the potential to either under- or overestimate ambient levels (*e.g.,* meteorology and receptor locations). On balance, considering the directional nature of the uncertainties commonly present in ambient concentrations estimated by dispersion models, the approach we apply in the RTR assessments should yield unbiased estimates of ambient HAP concentrations.

c. Uncertainties in Inhalation Exposure

The EPA did not include the effects of human mobility on exposures in the assessment. Specifically, short-term mobility and long-term mobility between census blocks in the modeling domain were not considered.[16] The approach of not considering short- or long-term population mobility does not bias the estimate of the theoretical MIR (by definition), nor does it affect the estimate of cancer incidence because the total population number remains the same. It does, however, affect the shape of the distribution of individual risks across the affected population, shifting it toward higher estimated individual risks at the upper end and reducing the number of people estimated to be at lower risks, thereby increasing the estimated number of people at specific high-risk levels (*e.g.,* 1-in-10 thousand or 1-in-1 million).

In addition, the assessment predicted the chronic exposures at the centroid of each populated census block as surrogates for the exposure concentrations for all people living in that block. Using the census block centroid to predict chronic exposures tends to over-predict exposures for people in the census block who live further from the facility and under-predict exposures for people in the census block who live closer to the facility. Thus, using the census block centroid to predict chronic exposures may lead to a potential understatement or overstatement of the true maximum impact, but is an unbiased estimate of average risk and incidence. We reduce this uncertainty by analyzing large census blocks near facilities using aerial imagery and adjusting the location of the block centroid to better represent the population in the block, as well as adding additional receptor locations where the block population is not well represented by a single location.

The assessment evaluates the cancer inhalation risks associated with pollutant exposures over a 70-year period, which is the assumed lifetime of an individual. In reality, both the length of time that modeled emission sources at facilities actually operate (*i.e.,* more or less than 70 years) and the domestic growth or decline of the modeled industry (*i.e.,* the increase or decrease in the number or size of domestic facilities) will influence the future risks posed by a given source or source category. Depending on the characteristics of the industry, these factors will, in most cases, result in an overestimate both in individual risk levels and in the total estimated number of cancer cases. However, in the unlikely scenario where a facility maintains, or even increases, its emissions levels over a period of more than 70 years, residents live beyond 70 years at the same location, and the residents spend most of their days at that location, then the cancer inhalation risks could potentially be underestimated. However, annual cancer incidence estimates from exposures to emissions from these

[16] Short-term mobility is movement from one micro-environment to another over the course of hours or days. Long-term mobility is movement from one residence to another over the course of a lifetime.

sources would not be affected by the length of time an emissions source operates.

The exposure estimates used in these analyses assume chronic exposures to ambient (outdoor) levels of pollutants. Because most people spend the majority of their time indoors, actual exposures may not be as high, depending on the characteristics of the pollutants modeled. For many of the HAP, indoor levels are roughly equivalent to ambient levels, but for very reactive pollutants or larger particles, indoor levels are typically lower. This factor has the potential to result in an overestimate of 25 to 30 percent of exposures.[17]

In addition to the uncertainties highlighted above, there are several factors specific to the acute exposure assessment that should be highlighted. The accuracy of an acute inhalation exposure assessment depends on the simultaneous occurrence of independent factors that may vary greatly, such as hourly emissions rates, meteorology and human activity patterns. In this assessment, we assume that individuals remain for 1 hour at the point of maximum ambient concentration as determined by the co-occurrence of peak emissions and worst-case meteorological conditions. These assumptions would tend to be worst-case actual exposures as it is unlikely that a person would be located at the point of maximum exposure during the time when peak emissions and worst-case meteorological conditions occur simultaneously.

d. Uncertainties in Dose-Response Relationships

There are uncertainties inherent in the development of the dose-response values used in our risk assessments for cancer effects from chronic exposures and non-cancer effects from both chronic and acute exposures. Some uncertainties may be considered quantitatively, and others generally are expressed in qualitative terms. We note as a preface to this discussion a point on dose-response uncertainty that is brought out in the EPA's *2005 Cancer Guidelines*; namely, that ''the primary goal of EPA actions is protection of human health; accordingly, as an Agency policy, risk assessment procedures, including default options that are used in the absence of scientific data to the contrary, should be health protective'' (*EPA 2005 Cancer Guidelines,* pages 1–7). This is the approach followed here as summarized in the next several paragraphs. A complete detailed discussion of uncertainties and variability in dose-response relationships is given in the *Draft Residual Risk Assessment for the Petroleum Refining Source Sector,* which is available in the docket for this action (Docket ID Number EPA–HQ–OAR–2010–0682).

Cancer URE values used in our risk assessments are those that have been developed to generally provide an upper bound estimate of risk. That is, they represent a ''plausible upper limit to the true value of a quantity'' (although this is usually not a true statistical confidence limit).[18] In some circumstances, the true risk could be as low as zero; however, in other circumstances, the risk could also be greater.[19] When developing an upper-bound estimate of risk and to provide risk values that do not underestimate risk, health-protective default approaches are generally used. To err on the side of ensuring adequate health-protection, the EPA typically uses the upper bound estimates rather than lower bound or central tendency estimates in our risk assessments, an approach that may have limitations for other uses (*e.g.,* priority-setting or expected benefits analysis).

Chronic non-cancer RfC and reference dose (RfD) values represent chronic exposure levels that are intended to be health-protective levels. Specifically, these values provide an estimate (with uncertainty spanning perhaps an order of magnitude) of a continuous inhalation exposure (RfC) or a daily oral exposure (RfD) to the human population (including sensitive subgroups) that is likely to be without an appreciable risk of deleterious effects during a lifetime. To derive values that are intended to be ''without appreciable risk,'' the methodology relies upon an uncertainty factor (UF) approach (U.S. EPA, 1993, 1994) which considers uncertainty, variability and gaps in the available data. The UF are applied to derive reference values that are intended to protect against appreciable risk of deleterious effects. The UF are commonly default values,[20] *e.g.,* factors of 10 or 3, used in the absence of compound-specific data; where data are available, UF may also be developed using compound-specific information. When data are limited, more assumptions are needed and more UF are used. Thus, there may be a greater tendency to overestimate risk in the sense that further study might support development of reference values that are higher (*i.e.,* less potent) because fewer default assumptions are needed. However, for some pollutants, it is possible that risks may be underestimated.

While collectively termed ''UF,'' these factors account for a number of different quantitative considerations when using observed animal (usually rodent) or human toxicity data in the development of the RfC. The UF are intended to account for: (1) Variation in susceptibility among the members of the human population (*i.e.,* inter-individual variability); (2) uncertainty in extrapolating from experimental animal data to humans (*i.e.,* interspecies differences); (3) uncertainty in extrapolating from data obtained in a study with less-than-lifetime exposure (*i.e.,* extrapolating from sub-chronic to chronic exposure); (4) uncertainty in extrapolating the observed data to obtain an estimate of the exposure associated with no adverse effects; and (5) uncertainty when the database is incomplete or there are problems with the applicability of available studies.

Many of the UF used to account for variability and uncertainty in the development of acute reference values are quite similar to those developed for chronic durations, but they more often use individual UF values that may be less than 10. The UF are applied based on chemical-specific or health effect-specific information (*e.g.,* simple irritation effects do not vary appreciably between human individuals, hence a value of 3 is typically used), or based on the purpose for the reference value (see the following paragraph). The UF

[17] U.S. EPA. *National-Scale Air Toxics Assessment for 1996.* (EPA 453/R–01–003; January 2001; page 85.)

[18] IRIS glossary (*http://ofmpub.epa.gov/sor_internet/registry/termreg/searchandretrieve/glossariesandkeywordlists/search.do?details=&glossaryName=IRIS%20Glossary*).

[19] An exception to this is the URE for benzene, which is considered to cover a range of values, each end of which is considered to be equally plausible, and which is based on maximum likelihood estimates.

[20] According to the NRC report, *Science and Judgment in Risk Assessment* (NRC, 1994) ''[Default] options are generic approaches, based on general scientific knowledge and policy judgment, that are applied to various elements of the risk assessment process when the correct scientific model is unknown or uncertain.'' The 1983 NRC report, *Risk Assessment in the Federal Government: Managing the Process,* defined default option as ''the option chosen on the basis of risk assessment policy that appears to be the best choice in the absence of data to the contrary'' (NRC, 1983a, p. 63). Therefore, default options are not rules that bind the Agency; rather, the Agency may depart from them in evaluating the risks posed by a specific substance when it believes this to be appropriate. In keeping with EPA's goal of protecting public health and the environment, default assumptions are used to ensure that risk to chemicals is not underestimated (although defaults are not intended to overtly overestimate risk). See EPA, 2004, *An Examination of EPA Risk Assessment Principles and Practices,* EPA/100/B–04/001 available at: *http://www.epa.gov/osa/pdfs/ratf-final.pdf.*

applied in acute reference value derivation include: (1) Heterogeneity among humans; (2) uncertainty in extrapolating from animals to humans; (3) uncertainty in lowest observable adverse effect (exposure) level to no observed adverse effect (exposure) level adjustments; and (4) uncertainty in accounting for an incomplete database on toxic effects of potential concern. Additional adjustments are often applied to account for uncertainty in extrapolation from observations at one exposure duration (*e.g.,* 4 hours) to derive an acute reference value at another exposure duration (*e.g.,* 1 hour).

Not all acute reference values are developed for the same purpose and care must be taken when interpreting the results of an acute assessment of human health effects relative to the reference value or values being exceeded. Where relevant to the estimated exposures, the lack of short-term dose-response values at different levels of severity should be factored into the risk characterization as potential uncertainties.

Although every effort is made to identify appropriate human health effect dose-response assessment values for all pollutants emitted by the sources in this risk assessment, some HAP emitted by these source categories are lacking dose-response assessments. Accordingly, these pollutants cannot be included in the quantitative risk assessment, which could result in quantitative estimates understating HAP risk. To help to alleviate this potential underestimate, where we conclude similarity with a HAP for which a dose-response assessment value is available, we use that value as a surrogate for the assessment of the HAP for which no value is available. To the extent use of surrogates indicates appreciable risk, we may identify a need to increase priority for new IRIS assessment of that substance. We additionally note that, generally speaking, HAP of greatest concern due to environmental exposures and hazard are those for which dose-response assessments have been performed, reducing the likelihood of understating risk. Further, HAP not included in the quantitative assessment are assessed qualitatively and considered in the risk characterization that informs the risk management decisions, including with regard to consideration of HAP reductions achieved by various control options.

For a group of compounds that are unspeciated (*e.g.,* glycol ethers), we conservatively use the most protective reference value of an individual compound in that group to estimate risk. Similarly, for an individual compound in a group (*e.g.,* ethylene glycol diethyl ether) that does not have a specified reference value, we also apply the most protective reference value from the other compounds in the group to estimate risk.

e. Uncertainties in the Multipathway Assessment

For each source category, we generally rely on site-specific levels of PB-HAP emissions to determine whether a refined assessment of the impacts from multipathway exposures is necessary. This determination is based on the results of a two-tiered screening analysis that relies on the outputs from models that estimate environmental pollutant concentrations and human exposures for four PB-HAP. Two important types of uncertainty associated with the use of these models in RTR risk assessments and inherent to any assessment that relies on environmental modeling are model uncertainty and input uncertainty.[21]

Model uncertainty concerns whether the selected models are appropriate for the assessment being conducted and whether they adequately represent the actual processes that might occur for that situation. An example of model uncertainty is the question of whether the model adequately describes the movement of a pollutant through the soil. This type of uncertainty is difficult to quantify. However, based on feedback received from previous EPA SAB reviews and other reviews, we are confident that the models used in the screen are appropriate and state-of-the-art for the multipathway risk assessments conducted in support of RTR.

Input uncertainty is concerned with how accurately the models have been configured and parameterized for the assessment at hand. For Tier I of the multipathway screen, we configured the models to avoid underestimating exposure and risk. This was accomplished by selecting upper-end values from nationally-representative data sets for the more influential parameters in the environmental model, including selection and spatial configuration of the area of interest, lake location and size, meteorology, surface water and soil characteristics and structure of the aquatic food web. We also assume an ingestion exposure scenario and values for human exposure factors that represent reasonable maximum exposures.

In Tier II of the multipathway assessment, we refine the model inputs to account for meteorological patterns in the vicinity of the facility versus using upper-end national values and we identify the actual location of lakes near the facility rather than the default lake location that we apply in Tier I. By refining the screening approach in Tier II to account for local geographical and meteorological data, we decrease the likelihood that concentrations in environmental media are overestimated, thereby increasing the usefulness of the screen. The assumptions and the associated uncertainties regarding the selected ingestion exposure scenario are the same for Tier I and Tier II.

For both Tiers I and II of the multipathway assessment, our approach to addressing model input uncertainty is generally cautious. We choose model inputs from the upper end of the range of possible values for the influential parameters used in the models, and we assume that the exposed individual exhibits ingestion behavior that would lead to a high total exposure. This approach reduces the likelihood of not identifying high risks for adverse impacts.

Despite the uncertainties, when individual pollutants or facilities do screen out, we are confident that the potential for adverse multipathway impacts on human health is very low. On the other hand, when individual pollutants or facilities do not screen out, it does not mean that multipathway impacts are significant, only that we cannot rule out that possibility and that a refined multipathway analysis for the site might be necessary to obtain a more accurate risk characterization for the source categories.

For further information on uncertainties and the Tier I and II screening methods, refer to the risk document Appendix 4, *Technical Support Document for TRIM-Based Multipathway Tiered Screening Methodology for RTR.*

f. Uncertainties in the Environmental Risk Screening Assessment

For each source category, we generally rely on site-specific levels of environmental HAP emissions to perform an environmental screening assessment. The environmental screening assessment is based on the outputs from models that estimate environmental HAP concentrations. The same models, specifically the TRIM.FaTE multipathway model and the AERMOD air dispersion model, are used to estimate environmental HAP

[21] In the context of this discussion, the term ''uncertainty'' as it pertains to exposure and risk encompasses both *variability* in the range of expected inputs and screening results due to existing spatial, temporal, and other factors, as well as *uncertainty* in being able to accurately estimate the true result.

concentrations for both the human multipathway screening analysis and for the environmental screening analysis. Therefore, both screening assessments have similar modeling uncertainties.

Two important types of uncertainty associated with the use of these models in RTR environmental screening assessments—and inherent to any assessment that relies on environmental modeling—are model uncertainty and input uncertainty.[22]

Model uncertainty concerns whether the selected models are appropriate for the assessment being conducted and whether they adequately represent the movement and accumulation of environmental HAP emissions in the environment. For example, does the model adequately describe the movement of a pollutant through the soil? This type of uncertainty is difficult to quantify. However, based on feedback received from previous EPA SAB reviews and other reviews, we are confident that the models used in the screen are appropriate and state-of-the-art for the environmental risk assessments conducted in support of our RTR analyses.

Input uncertainty is concerned with how accurately the models have been configured and parameterized for the assessment at hand. For Tier I of the environmental screen for PB–HAP, we configured the models to avoid underestimating exposure and risk to reduce the likelihood that the results indicate the risks are lower than they actually are. This was accomplished by selecting upper-end values from nationally-representative data sets for the more influential parameters in the environmental model, including selection and spatial configuration of the area of interest, the location and size of any bodies of water, meteorology, surface water and soil characteristics and structure of the aquatic food web. In Tier I, we used the maximum facility-specific emissions for cadmium compounds, dioxins/furans, POM, and mercury and each of the media when comparing to ecological benchmarks. This is consistent with the conservative design of Tier I of the screen. In Tier II of the environmental screening analysis for PB–HAP, we refine the model inputs to account for meteorological patterns in the vicinity of the facility versus using upper-end national values, and we identify the locations of water bodies near the facility location. By refining the screening approach in Tier II to account for local geographical and meteorological data, we decrease the likelihood that concentrations in environmental media are overestimated, thereby increasing the usefulness of the screen. To better represent widespread impacts, the modeled soil concentrations are averaged in Tier II to obtain one average soil concentration value for each facility and for each PB–HAP. For PB–HAP concentrations in water, sediment and fish tissue, the highest value for each facility for each pollutant is used.

For the environmental screening assessment for acid gases, we employ a single-tiered approach. We use the modeled air concentrations and compare those with ecological benchmarks.

For both Tiers I and II of the environmental screening assessment, our approach to addressing model input uncertainty is generally cautious. We choose model inputs from the upper end of the range of possible values for the influential parameters used in the models, and we assume that the exposed organism (*e.g.,* invertebrate, fish) exhibits ingestion behavior that would lead to a high total exposure. This approach reduces the likelihood of not identifying potential risks for adverse environmental impacts.

Uncertainty also exists in the ecological benchmarks for the environmental risk screening analysis. We established a hierarchy of preferred benchmark sources to allow selection of benchmarks for each environmental HAP at each ecological assessment endpoint. In general, EPA benchmarks used at a programmatic level (*e.g.,* Office of Water, Superfund Program) were used if available. If not, we used EPA benchmarks used in regional programs (*e.g.,* Superfund). If benchmarks were not available at a programmatic or regional level, we used benchmarks developed by other agencies (*e.g.,* NOAA) or by state agencies.

In all cases (except for lead, which was evaluated through a comparison to the NAAQS), we searched for benchmarks at the following three effect levels, as described in section III.A.6 of this preamble:

1. A no-effect level (*i.e.,* NOAEL).
2. Threshold-effect level (*i.e.,* LOAEL).
3. Probable effect level (*i.e.,* PEL).

For some ecological assessment endpoint/environmental HAP combinations, we could identify benchmarks for all three effect levels, but for most, we could not. In one case, where different agencies derived significantly different numbers to represent a threshold for effect, we included both. In several cases, only a single benchmark was available. In cases where multiple effect levels were available for a particular PB–HAP and assessment endpoint, we used all of the available effect levels to help us to determine whether risk exists and if the risks could be considered significant and widespread.

The EPA evaluated the following seven HAP in the environmental risk screening assessment: Cadmium, dioxins/furans, POM, mercury (both inorganic mercury and methyl mercury), lead compounds, HCl and HF. These seven HAP represent pollutants that can cause adverse impacts for plants and animals either through direct exposure to HAP in the air or through exposure to HAP that is deposited from the air onto soils and surface waters. These seven HAP also represent those HAP for which we can conduct a meaningful environmental risk screening assessment. For other HAP not included in our screening assessment, the model has not been parameterized such that it can be used for that purpose. In some cases, depending on the HAP, we may not have appropriate multipathway models that allow us to predict the concentration of that pollutant. The EPA acknowledges that other HAP beyond the seven HAP that we are evaluating may have the potential to cause adverse environmental effects and, therefore, the EPA may evaluate other relevant HAP in the future, as modeling science and resources allow.

Further information on uncertainties and the Tier I and II environmental screening methods is provided in Appendix 5 of the document *Technical Support Document for TRIM-Based Multipathway Tiered Screening Methodology for RTR: Summary of Approach and Evaluation.* Also, see the *Draft Residual Risk Assessment for the Petroleum Refining Source Sector,* available in the docket for this action (Docket ID Number EPA–HQ–OAR–2010–0682).

B. How did we consider the risk results in making decisions for this proposal?

As discussed in section II.A.1 of this preamble, in evaluating and developing standards under CAA section 112(f)(2), we apply a two-step process to address residual risk. In the first step, the EPA determines whether risks are acceptable. This determination ''considers all health information, including risk estimation uncertainty, and includes a presumptive limit on maximum individual lifetime

[22] In the context of this discussion, the term ''uncertainty,'' as it pertains to exposure and risk assessment, encompasses both variability in the range of expected inputs and screening results due to existing spatial, temporal, and other factors, as well as uncertainty in being able to accurately estimate the true result.

[cancer] risk (MIR)[23] of approximately [1-in-10 thousand] [*i.e.,* 100-in-1 million].'' 54 FR 38045, September 14, 1989. If risks are unacceptable, the EPA must determine the emissions standards necessary to bring risks to an acceptable level without considering costs. In the second step of the process, the EPA considers whether the emissions standards provide an ample margin of safety ''in consideration of all health information, including the number of persons at risk levels higher than approximately 1-in-1 million, as well as other relevant factors, including costs and economic impacts, technological feasibility, and other factors relevant to each particular decision.'' *Id.* The EPA must promulgate tighter emission standards if necessary to provide an ample margin of safety.

In past residual risk actions, the EPA considered a number of human health risk metrics associated with emissions from the categories under review, including the MIR, the number of persons in various risk ranges, cancer incidence, the maximum non-cancer HI and the maximum acute non-cancer hazard. *See, e.g.,* 72 FR 25138, May 3, 2007; 71 FR 42724, July 27, 2006. The EPA considered this health information for both actual and allowable emissions. *See, e.g.,* 75 FR 65068, October 21, 2010, and 75 FR 80220, December 21, 2010). The EPA also discussed risk estimation uncertainties and considered the uncertainties in the determination of acceptable risk and ample margin of safety in these past actions. The EPA considered this same type of information in support of this action.

The agency is considering these various measures of health information to inform our determinations of risk acceptability and ample margin of safety under CAA section 112(f). As explained in the Benzene NESHAP, ''the first step of judgment on acceptability cannot be reduced to any single factor,'' and thus ''[t]he Administrator believes that the acceptability of risk under [previous] section 112 is best judged on the basis of a broad set of health risk measures and information.'' 54 FR 38046, September 14, 1989. Similarly, with regard to making the ample margin of safety determination, ''the Agency again considers all of the health risk and other health information considered in the first step. Beyond that information, additional factors relating to the appropriate level of control will also be considered, including cost and economic impacts of controls, technological feasibility, uncertainties, and any other relevant factors.'' *Id.*

The Benzene NESHAP approach provides flexibility regarding factors the EPA may consider in making determinations and how the EPA may weigh those factors for each source category. In responding to comment on our policy under the Benzene NESHAP, the EPA explained that:

> [t]he policy chosen by the Administrator permits consideration of multiple measures of health risk. Not only can the MIR figure be considered, but also incidence, the presence of non-cancer health effects, and the uncertainties of the risk estimates. In this way, the effect on the most exposed individuals can be reviewed as well as the impact on the general public. These factors can then be weighed in each individual case. This approach complies with the *Vinyl Chloride* mandate that the Administrator ascertain an acceptable level of risk to the public by employing [her] expertise to assess available data. It also complies with the Congressional intent behind the CAA, which did not exclude the use of any particular measure of public health risk from the EPA's consideration with respect to CAA section 112 regulations, and thereby implicitly permits consideration of any and all measures of health risk which the Administrator, in [her] judgment, believes are appropriate to determining what will 'protect the public health.'

See 54 FR at 38057, September 14, 1989. Thus, the level of the MIR is only one factor to be weighed in determining acceptability of risks. The Benzene NESHAP explained that ''an MIR of approximately one in 10 thousand should ordinarily be the upper end of the range of acceptability. As risks increase above this benchmark, they become presumptively less acceptable under CAA section 112, and would be weighed with the other health risk measures and information in making an overall judgment on acceptability. Or, the Agency may find, in a particular case, that a risk that includes MIR less than the presumptively acceptable level is unacceptable in the light of other health risk factors.'' *Id.* at 38045. Similarly, with regard to the ample margin of safety analysis, the EPA stated in the Benzene NESHAP that: ''EPA believes the relative weight of the many factors that can be considered in selecting an ample margin of safety can only be determined for each specific source category. This occurs mainly because technological and economic factors (along with the health-related factors) vary from source category to source category.'' *Id.* at 38061. We also consider the uncertainties associated with the various risk analyses, as discussed earlier in this preamble, in our determinations of acceptability and ample margin of safety.

The EPA notes that it has not considered certain health information to date in making residual risk determinations. At this time, we do not attempt to quantify those HAP risks that may be associated with emissions from other facilities that do not include the source categories in question, mobile source emissions, natural source emissions, persistent environmental pollution or atmospheric transformation in the vicinity of the sources in these categories.

The agency understands the potential importance of considering an individual's total exposure to HAP in addition to considering exposure to HAP emissions from the source category and facility. We recognize that such consideration may be particularly important when assessing non-cancer risks, where pollutant-specific health reference levels (*e.g.,* RfCs) are based on the assumption that thresholds exist for adverse health effects. For example, the agency recognizes that, although exposures attributable to emissions from a source category or facility alone may not indicate the potential for increased risk of adverse non-cancer health effects in a population, the exposures resulting from emissions from the facility in combination with emissions from all of the other sources (*e.g.,* other facilities) to which an individual is exposed may be sufficient to result in increased risk of adverse non-cancer health effects. In May 2010, the SAB advised the EPA ''that RTR assessments will be most useful to decision makers and communities if results are presented in the broader context of aggregate and cumulative risks, including background concentrations and contributions from other sources in the area.''[24]

In response to the SAB recommendations, the EPA is incorporating cumulative risk analyses into its RTR risk assessments, including those reflected in this proposal. The agency is: (1) Conducting facility-wide assessments, which include source category emission points as well as other emission points within the facilities; (2) considering sources in the same category whose emissions result in exposures to the same individuals; and (3) for some persistent and

[23] Although defined as ''maximum individual risk,'' MIR refers only to cancer risk. MIR, one metric for assessing cancer risk, is the estimated risk were an individual exposed to the maximum level of a pollutant for a lifetime.

[24] EPA's responses to this and all other key recommendations of the SAB's advisory on RTR risk assessment methodologies (which is available at: *http://yosemite.epa.gov/sab/sabproduct.nsf/4AB3966E263D943A8525771F00668381/$File/EPA-SAB-10-007-unsigned.pdf*) are outlined in a memo to this rulemaking docket from David Guinnup entitled, *EPA's Actions in Response to the Key Recommendations of the SAB Review of RTR Risk Assessment Methodologies.*

bioaccumulative pollutants, analyzing the ingestion route of exposure. In addition, the RTR risk assessments have always considered aggregate cancer risk from all carcinogens and aggregate non-cancer hazard indices from all non-carcinogens affecting the same target organ system.

Although we are interested in placing source category and facility-wide HAP risks in the context of *total* HAP risks from all sources combined in the vicinity of each source, we are concerned about the uncertainties of doing so. Because we have not conducted in-depth studies of risks due to emissions from sources other those at refineries subject to this RTR review, such estimates of total HAP risks would have significantly greater associated uncertainties than the source category or facility-wide estimates. Such aggregate or cumulative assessments would compound those uncertainties, making the assessments too unreliable.

C. How did we perform the technology review?

Our technology review focused on the identification and evaluation of developments in practices, processes and control technologies that have occurred since the MACT standards were promulgated. Where we identified such developments, in order to inform our decision of whether it is ''necessary'' to revise the emissions standards, we analyzed the technical feasibility of applying these developments, and the estimated costs, energy implications, non-air environmental impacts, as well as considering the emission reductions. We also considered the appropriateness of applying controls to new sources versus retrofitting existing sources.

Based on our analyses of the available data and information, we identified potential developments in practices, processes and control technologies. For this exercise, we considered any of the following to be a ''development'':

- Any add-on control technology or other equipment that was not identified and considered during development of the original MACT standards.
- Any improvements in add-on control technology or other equipment (that were identified and considered during development of the original MACT standards) that could result in additional emissions reduction.
- Any work practice or operational procedure that was not identified or considered during development of the original MACT standards.
- Any process change or pollution prevention alternative that could be broadly applied to the industry and that was not identified or considered during development of the original MACT standards.
- Any significant changes in the cost (including cost effectiveness) of applying controls (including controls the EPA considered during the development of the original MACT standards).

We reviewed a variety of data sources in our investigation of potential practices, processes or controls to consider. Among the sources we reviewed were the NESHAP for various industries that were promulgated since the MACT standards being reviewed in this action. We reviewed the regulatory requirements and/or technical analyses associated with these regulatory actions to identify any practices, processes and control technologies considered in these efforts that could be applied to emission sources subject to Refinery MACT 1 or 2, as well as the costs, non-air impacts and energy implications associated with the use of these technologies. Additionally, we requested information from facilities as described in section II.C of this preamble. Finally, we reviewed information from other sources, such as state and/or local permitting agency databases and industry-supported databases.

IV. Analytical Results and Proposed Decisions

A. What actions are we taking pursuant to CAA sections 112(d)(2) and 112(d)(3)?

In this action, we are proposing the following revisions to the Refinery MACT 1 and 2 standards pursuant to CAA section 112(d)(2) and (3) [25]: (1) Adding MACT standards for DCU decoking operations; (2) revising the CRU purge vent pressure exemption; (3) adding operational requirements for flares used as air pollution control devices (APCD) in Refinery MACT 1 and 2; and (4) adding requirements and clarifications for vent control bypasses in Refinery MACT 1. The results and proposed decisions based on the analyses performed pursuant to CAA section 112(d)(2) and (3) are presented below.

[25] The EPA has authority under CAA section 112(d)(2) and (d)(3) to set MACT standards for previously unregulated emission points. EPA also retains the discretion to revise a MACT standard under the authority of Section 112(d)(2) and (3), see Portland Cement Ass'n v. EPA, 665 F.3d 177, 189 (D.C. Cir. 2011), such as when it identifies an error in the original standard. See also *Medical Waste Institute* v. *EPA,* 645 F. 3d at 426 (upholding EPA action establishing MACT floors, based on post-compliance data, when originally-established floors were improperly established).

1. Delayed Coking Units

a. Description of Delayed Coker Process Operations and Emissions

We are proposing to establish MACT standards specific to the DCU pursuant to CAA section 112(d)(2) and (3). The DCU uses thermal cracking to upgrade heavy feedstocks and to produce petroleum coke. Unlike most other refinery operations that are continuous, the DCU operates in a semi-batch system. Most DCU consist of a large process heater, two or more coking drums, and a single product distillation column. The DCU feed is actually fed to the unit's distillation column. Bottoms from the distillation column are heated to near cracking temperatures and the resulting heavy oil is fed to one of the coking drums. As the cracking reactions occur, coke is produced in the drum and begins to fill the drum with sponge-like solid coke material. During this process, the DCU is a closed system, with the produced gas streams piped to the unit's distillation column for product recovery.

When the first coke drum becomes filled with coke, the feed is diverted to the second coke drum and processing continues via the second coke drum. The full coke drum, which is no longer receiving oil feed, is taken through a number of steps, collectively referred to as decoking operations, to remove the coke from the drum and prepare the drum for subsequent oil feed processing. The decoking steps include: purging, cooling/quenching, venting, draining, deheading, and coke cutting. A description of these steps and the potential emissions from these activities are provided in the next several paragraphs. Once the coke is removed, the vessel is re-sealed (*i.e.,* the drain valve is closed and the ''head'' is re-attached), pressure tested (typically using steam), purged to remove oxygen, then slowly heated to processing temperatures so it can go back on-line. When the second coke drum becomes filled with coke, feed is diverted back to the first coke drum and the second drum is then decoked. In this manner, the DCU allows for continuous processing of oil even though the individual coke drums operate in cyclical batch fashion.

The first step in decoking operations is to purge the coke drum with steam. This serves to cool the coke bed and to flush oil or reaction products from the coke bed. The steam purge is initially sent to the product distillation column and then diverted to the unit's blowdown system. The blowdown system serves to condense the steam and other liquids entrained in the

steam. Nearly all DCU operate a ''closed blowdown'' system, such that uncondensed gases from the blowdown system are sent to the product distillation column or the facility's light gas plant, recovered as fuel gas, or combusted in a flare. In an open blowdown system, these uncondensed gases would be vented directly to atmosphere. The DCU vent discharge to the blowdown system is specifically defined in Refinery MACT 1 as the ''delayed coker vent.''

The next step in the decoking process is cooling/quenching the coke drum and its contents via the addition of water, commonly referred to as quench water, at the bottom of the coke drum. The water added to the vessel quickly turns to steam due to the high temperature of the coke bed. The water/steam helps to further cool the coke bed and ''quench'' any residual coking reactions that may still occur within the hot coke bed. As with the steam purge, steam off-gas from the cooling/quenching cycle is recovered in the unit's blowdown system and this vent discharge is specifically defined in Refinery MACT 1 as the ''delayed coker vent.''

After several hours, the coke drum is sufficiently cooled so that the water level in the drum can be raised to entirely cover the coke bed. Although water covers the coke bed, the upper portion of the coke bed may still be well above 212 degrees Fahrenheit (°F) and will continue to generate steam. In fact, since the coke drum vessel pressure is greater than atmospheric pressure, the equilibrium boiling point of water in the vessel is greater than 212 °F. Therefore, the water at the top of the coke drum is typically well above 212 °F (superheated water). As the coke drum and its contents continue to cool from the evaporative cooling effect of the steam generation, the steam generation rate and the pressure within the vessel will decrease.

Owners or operators of DCU may use different indicators or set points to determine when the system has cooled sufficiently to move to the venting step; however, one of the most common indicators monitored is the pressure of the coke drum vessel (or steam vent line just above the coke drum, where steam exits the coke drum en route to the blowdown system). When the vessel has cooled sufficiently (*e.g.,* when the coke drum vessel pressure reaches the desired set point), valves are opened to allow the steam generated in the coke drum to vent directly to the atmosphere rather than the closed blowdown system. This vent is commonly referred to as the ''coker steam vent'' and is typically the first direct atmospheric emission release during the decoking operations when an enclosed blowdown system is used. While this vent gas contains predominately steam, methane and ethane, a variety of HAP are also emitted with this steam. These HAP include light aromatics (*e.g.,* benzene, toluene, and xylene) and light POM (predominately naphthalene and 2-methyl naphthalene). The level of HAP emitted from the DCU has been found to be a function of the quantity of steam generated (see the technical memorandum entitled *Impacts Estimates for Delayed Coking Units* in Docket ID Number EPA–HQ–OAR–2010–0682).

In general, the next step in the decoking process is draining the water from the coke drum by opening a large valve at the bottom of the coke drum. The drain water typically falls from the coke drum onto a slanted concrete pad that directs the water to the coke pit area (where water and coke are collected and separated). Some DCU owners or operators initiate draining at the same time they initiate venting; other owners or operators may allow the vessel to vent for 20 or more minutes prior to initiating draining. While draining immediately may reduce the amount of steam exiting the unit via the stack, as explained below, it is not expected to alter the overall emissions from the unit. During the venting and draining process, the pressure of the system falls to atmospheric. Steam will be generated until the evaporative cooling effect of that steam generation cools the coker quench water to 212 °F. If draining is initiated immediately, some of the superheated water may drain from the DCU before being cooled. A portion of that drained water will then convert to steam during the draining process as that superheated water contacts the open atmosphere. Therefore, draining quickly is not expected to alter the total amount of steam generated from the unit nor alter the overall emissions from the unit. It will, however, alter the relative proportion of the emissions that are released via the vent versus the quench water drain area.

The next step in the decoking process is ''deheading'' the coke drum. At the top of the coke drum is a large 3- to 5-foot diameter opening, which is sealed with a gasketed lid during normal operations. When the steam generation rate from the coke drum has sufficiently subsided, this gasketed lid is removed to allow access for a water drill that will be used to remove coke from the drum. The process of removing this lid is referred to as ''deheading'' the coke drum. Different DCU owners or operators may use different criteria for when to dehead the coke drum. If the coke drum is deheaded soon after venting is initiated, some steam and associated HAP emissions may be released from this opening. As with draining, it is anticipated that the total volume of steam generated will be a function of the temperature/pressure of the coke drum. Deheading the coke drum prior to the coke drum contents reaching 212 °F will generally mean that some of the steam will be released from the coke drum head opening. However, this will not alter the total amount of steam generated; it merely alters the location of the release (coke drum head opening versus steam vent). The HAP emissions from the deheading process are expected to be proportional to the amount of steam released in the same manner as the emissions from the steam vent.

The final step of the decoking process is coke cutting. A high-pressure water jet is used to drill or cut the coke out of the vessel. The drilling water and coke slurry exits the coke drum via the drain opening and collects in the coke pit. Generally, the coke drum and its contents are sufficiently cooled so that this process is not expected to yield significant HAP emissions. However, if the other decoking steps are performed too quickly, hot spots may exist within the coke bed and HAP emissions may occur as water contacts these hot spots and additional steam and emissions are released.

Once the coke is cut out of the drum, the drum is closed and prepared to go back on-line. This process includes pressurizing with steam to ensure there are no leaks (*i.e.,* that the head is properly attached and sealed and the drain valve is fully closed). The vessel is then purged to remove any oxygen and heated by diverting the produced gas from the processing coke drum through the empty drum prior to sending it to the unit's distillation column. A coke drum cycle is typically 28 to 36 hours from start of feed to start of the next feed.

b. How Delayed Coker Vents Are Addressed in Refinery MACT 1

Delayed coker vents are specifically mentioned as an example within the first paragraph of the definition of ''miscellaneous process vent'' in 40 CFR 63.641 of Refinery MACT 1. However, the definition of ''miscellaneous process vent'' also excludes coking unit vents associated with coke drum depressuring (at or below a coke drum outlet pressure of 15 pounds per square inch gauge [psig]), deheading, draining, or decoking (coke cutting) or pressure testing after decoking. Refinery MACT 1 also

includes a definition of ''delayed coker vent'' in 40 CFR 63.641. This vent is typically intermittent in nature, and usually occurs only during the initiation of the depressuring cycle of the decoking operation when vapor from the coke drums cannot be sent to the fractionator column for product recovery, but instead is routed to the atmosphere through a closed blowdown system or directly to the atmosphere in an open blowdown system. The emissions from the decoking phases of DCU operations, which include coke drum deheading, draining, or decoking (coke cutting), are not considered to be delayed coker vents.

The first paragraph of the definition of ''miscellaneous process vent'' also includes blowdown condensers/accumulators as an example of a miscellaneous process vent. Therefore, the DCU blowdown system is a miscellaneous process vent regardless of whether or not the blowdown system is associated with a DCU or another process unit. Further, the inclusion of the ''delayed coker vent'' as an example of a miscellaneous process vent makes it clear that the DCU's blowdown system vent (if an open blowdown system is used) is considered a miscellaneous process vent. It is less clear from the regulatory text whether the direct venting of the coke drum to the atmosphere via the steam vent during the final depressurization is considered to be a ''delayed coker vent'' (*i.e.,* whether direct venting to the atmosphere is equivalent to venting ''directly to the atmosphere in an open blowdown system'').

The regulatory text is clear that this steam vent is exempt from the definition of ''miscellaneous process vent'' when the pressure of the vessel is less than 15 psig. It is also clear that the subsequent release points from the decoking operations (*i.e.,* deheading, draining, and coke cutting) are excluded from both the definition of ''delayed coker vent'' and the definition of ''miscellaneous process vent.'' Further, based on the statements in the background information document for the August 1995 final Refinery MACT 1 rule,[26] the 15 psig pressure limit for the direct venting of the DCU to the atmosphere was not established as a MACT floor control level; it was established to accommodate all DCU at whatever pressure they typically switched from venting to the closed blowdown system to venting directly to the atmosphere. Based on this information, as well as the data from the 2011 Refinery ICR, refinery enforcement settlements and other information available, which indicate that all refineries depressurize the coke drum below 15 psig, we have determined that the direct atmospheric releases from the DCU decoking operations are currently unregulated emissions. These unregulated releases include emissions during atmospheric depressuring (*i.e.,* the steam vent), deheading, draining, and coke cutting.

c. Evaluation of MACT Emission Limitations for Delayed Coking Units

We evaluated emissions and controls during DCU decoking operations in order to identify appropriate MACT emission limitations pursuant to CAA section 112(d)(2) and (3). Establishing a lower pressure set point at which a DCU owner or operator can switch from venting to an enclosed blowdown system to venting to the atmosphere is the control technique identified for reducing emissions from delayed coking operations. Essentially, there is a fixed quantity of steam that will be generated as the coke drum and its contents cool. The lower pressure set point will require the DCU to vent to the closed blowdown system longer, where the organic HAP can be recovered or controlled. This will result in fewer emissions released during the venting, draining and deheading process.

We consider this control technique, which is a work practice standard, appropriate for the DCU for the reasons discussed below for each of the four possible emission points at the DCU: draining, deheading, coke cutting and the steam vent. For the first three steps, the emissions cannot be emitted through a conveyance designed and constructed to emit or capture such pollutant. For example, during draining, the drain water typically falls from the coke drum onto a slanted concrete pad that directs the water to an open coke pit area (where water and coke are collected and separated). When the coke drum is deheaded, the coke drum head must be removed to provide an accessible opening in the drum so the coke cutting equipment can be lowered into the drum. This opening cannot be sealed during coke cutting because the drilling shaft will occupy the opening and the shaft must be free to be lowered or raised during the coke cutting process.

While the emissions from the fourth point, the DCU steam vent, are released via a conveyance designed and constructed to emit or capture such pollutant, as provided in CAA section 112(h)(2)(B), it is not feasible to prescribe or enforce an emission standard for the DCU steam vent because the application of a measurement methodology for this source is not practicable due to technological and economic limitations.

First, it is not practicable to use a measurement methodology for the DCU steam vent. The emissions from the vent typically contain 99 percent water, which interferes with common sample collection and analysis techniques. Also, the flow rate from this vent is not constant; rather, it decreases during the venting process as the pressure in the DCU coke drum approaches atmospheric pressure. Additionally, the venting time can be very short. As part of the ICR, we requested stack testing of eight DCU. After discussions with stack testing experts within the agency and with outside contractors used by industry to perform the tests, we concluded that sources with venting times less than 20 minutes would not be able to perform an emissions test that would yield valid results. Therefore, only two of the eight facilities actually performed the tests. We anticipate all units complying with the proposed standards for DCU steam vents would vent for less than 20 minutes.

Second, it is not feasible to enforce an emission standard only on the steam vent because the timing of drainage and deheading can alter the portion of the decoking emissions that are released from the actual steam vent. If draining and deheading are initiated quickly after venting, this will reduce the emissions discharged from the vent (although as explained above, it does not reduce the emissions from the collective set of decoking operations release points).

Consequently, due to the unique nature of DCU emissions, the difficulties associated with monitoring the DCU steam vent, and the inability to construct a conveyance to capture emissions from all decoking release points, we are proposing that it is appropriate to develop work practice standards in place of emission limits for the DCU.

To establish the MACT floor, we then reviewed regulations, permits and consent decrees that require coke controls. Refinery NSPS Ja establishes a pressure limit of 5 psig prior to allowing the coke drum to be vented to the atmosphere. Based on a review of permit limits and consent decrees, we found that coke drum vessel pressure limits have been established (and achieved) as low as 2 psig. There are 75 operating DCU according to the Refinery ICR responses, so the sixth percentile is represented by the fifth-best performing DCU. We identified eight DCU with

[26] *National Emission Standards for Hazardous Air Pollutants Petroleum Refineries—Background Information for Final Standards;* EPA–453/R–95–015b.

permit requirements or consent decrees specifying a coke drum venting pressure limit of 2 psig; we did not identify any permit or consent decree requirements more stringent than 2 psig. Refinery owners and operators were asked to provide the ''typical coke drum pressure just prior to venting'' for each DCU in their responses to the Refinery ICR, and the responses indicate that four DCU operate such that the typical venting pressure is 1 psig or less. However, this ''typical coke drum pressure'' does not represent a not-to-be-exceeded pressure limit; it is expected that these units are operated this way to meet a pressure limit of 2 psig. We do not have information to indicate whether these facilities are always depressurized at 1 psig or less. Moreover, there were only four units for which a typical venting pressure of 1 psig was identified and the MACT floor for existing sources is represented by the fifth-best operating DCU, not the best-performing unit. Therefore, we are proposing that the MACT floor for DCU decoking operations is to depressure at 2 psig or less prior to venting to the atmosphere for existing sources. We are also proposing that the MACT floor for new sources is 2 psig, since the best-performing source is permitted to depressure at 2 psig or less. For additional details on the MACT floor analysis, see memorandum entitled *MACT Analysis for Delayed Coking Unit Decoking Operations* in Docket ID Number EPA–HQ–OAR–2010–0682.

We then considered control options beyond the floor level of 2 psig to determine if additional emission reductions could be cost-effectively achieved. We considered establishing a venting pressure limit of 1 psig or less, since four facilities reported in the ICR that the typical coke drum pressure prior to depressurizing was 1 psig. There are several technical difficulties associated with establishing a pressure limit at this lower level. First, the lowest pressure at any point in a closed blowdown system is generally designed to be no lower than 0.5 psig. Consequently, the DCU compressor system would operate with an inlet pressure of no less than 0.5 psig. Second, there are several valves and significant piping (for cooling and condensing steam) between the DCU drum and the recovery compressor. There is an inherent pressure drop when a fluid flows through a pipe or valve. Two valves are used for all DCU lines to make sure that the unit is either blocked off from the processing fluids or blocked in so there are no product losses out the steam line during processing. Considering the need for two valves and piping needed in the cooling system, DCU designed for a minimal pressure loss will generally still have a 0.5 to 1 psig pressure drop between the DCU drum and the recovery compressor inlet, even for a new DCU designed to minimize this pressure drop. Finally, in order to meet a 1 psig pressure limit at all times, the DCU closed vent system would need to be designed to achieve a vessel pressure of approximately 0.5 psig. Given the above considerations, it is not technically feasible for new or existing DCU to routinely achieve a vessel pressure of 0.5 psig in order to comply with a never-to-be-exceeded drum vessel pressure of 1 psig. As noted previously, facilities that ''typically'' achieve vessel pressures of about 1 psig or less are expected to do so in order to meet a never-to-be-exceeded drum vessel pressure limit of 2 psig and they are not expected to be able to comply with a never-to-be-exceeded drum vessel pressure limit of 1 psig.

We considered setting additional work practice standards regarding draining, deheading, and coke cutting. The decoking emissions can be released from a variety of locations, and the 2-psig-or-less limit for depressurizing the coke drum will effectively reduce the emissions from all of these emission points, provided that atmospheric venting via the DCU steam vent is the first step in the decoking process. However, it is possible to start draining water prior to opening the steam vent. We are concerned that owners or operators may adopt this practice as a means to reduce pressure in the coke drum prior to venting the drum to the atmosphere. Initiating water draining prior to reaching 2 psig would result in draining water that is hotter than it would be had the drum been sufficiently cooled (*i.e.,* the pressure limit achieved) prior to draining the vessel, effectively diverting HAP emissions to the water drain area rather than capturing these HAP in the enclosed blowdown system, where they can be either recovered or controlled. Therefore, we are proposing that the coke drum must reach 2 psig or less prior to any decoking operations, which includes atmospheric venting, draining, deheading, and coke cutting.

We could not identify any other emission reduction options that could lower the emissions from the DCU decoking operations. Since we could not identify a technically feasible control option beyond the MACT floor, we determined that the MACT floor pressure limit of 2 psig is MACT for existing sources. We also determined that the same technical limitations of going beyond the 2 psig pressure limit for existing sources exist for new sources; therefore we determined that the MACT floor pressure limit of 2 psig is MACT for new sources. We request comment on whether depressurizing to 2 psig prior to venting to the atmosphere is the appropriate MACT floor and whether it is appropriate to include restrictions for the other three decoking operations draining, deheading and coke cutting, in the MACT requirements. We request comments on whether we have adequately interpreted the information that indicates that there is currently no applicable MACT floor for delayed coking. If Refinery MACT 1 currently provided standards for DCU based on the MACT floor, we would evaluate whether it is necessary to revise such delayed coking standards under the risk and technology review requirements of the Act (*i.e.,* CAA section 112(f) and 112(d)(6)) as discussed later in this preamble.

Finally, we request comment and supporting information on any other practices that may be used to limit emissions during the decoking operations.

d. Evaluation of Cost and Environmental Impacts of MACT Emission Limitations for Delayed Coking Units

DCU that cannot currently meet the 2 psig pressure limit would be expected to install a device (compressor or steam ejector system) to lower the DCU vessel pressure. In the Refinery NSPS Ja impact analysis, facilities not able to meet the pressure threshold were assumed to purchase and install a larger compressor to lower the blowdown system pressure. Other approaches to lowering blowdown system (and coke drum) pressure exist. Specifically, steam ejectors have been identified as a method to help existing units depressurize more fully in order to achieve a set vessel pressure or drum bed temperature. Upgrading the closed vent system to reduce pressure losses or to increase steam condensing capacity may also allow the DCU to depressurize more quickly while the emissions are still vented to the closed blowdown system. This is important because delays in the decoking operations may impact process feed rates. That is, if the decoking and drum preparation steps take too long, the feed rate to the other coke unit must be reduced to prevent overfilling one coke drum prior to being able to switch to the other coke drum. This issue is less critical for DCU that operate with 3 or 4 drums per distillation column, but a consistent increase in the decoking times across all

drums may still limit the capacity of the DCU at some petroleum refineries.

For existing sources, we assumed all DCU that reported a ''typical drum pressure prior to venting'' of more than 2 psig would install and operate a steam ejector system to reduce the coke drum pressure to 2 psig prior to venting to atmosphere or draining.

The operating costs of the steam ejector system are offset, to some extent, by the additional recovered vapors. Vapors from the additional gases routed to the blowdown system contain high levels of methane (approximately 70 percent by volume on a dry basis) based on DCU steam vent test data. If these vapors are directed to the closed blowdown system rather than to the atmosphere, generally the dry gas can be recovered in the refinery fuel gas system or light-ends gas plant. This recovered methane is expected to off-set natural gas purchases for the fuel gas system.

For new sources, it is anticipated that the DCU's closed vent system could be designed to achieve a 2 psig vessel pressure with no significant increase in capital or operating costs. Designing the system to vent at a lower pressure would also result in additional vapor recovery, which is expected to off-set any additional capital costs associated with the low pressure design closed vent system.

The costs of complying with the 2 psig coke drum threshold prior to venting or draining are summarized in Table 2 of this preamble. The costs are approximately $1,000 per ton of VOC reduced and approximately $5,000 per ton of organic HAP reduced when considering VOC and methane recovery credits. In addition to VOC and HAP reductions, the proposed control option will result in a reduction in methane emissions of 18,000 tpy or 343,000 metric tonnes per year of carbon dioxide equivalents (CO_2e), assuming a global warming potential of 21 for methane.

TABLE 2—NATIONWIDE EMISSIONS REDUCTION AND COST IMPACTS OF CONTROL OPTION FOR DELAYED COKING UNITS AT PETROLEUM REFINERIES

Control option	Capital cost (million $)	Annualized costs without recovery credits (million $/yr)	Emissions reduction, VOC (tpy)	Emissions reduction, HAP (tpy)	Cost effectiveness ($/ton HAP)	Total annualized costs with VOC recovery credit (million $/yr)	Overall cost effectiveness with VOC recovery credit ($/ton HAP)
2 psig	52	10.2	4,250	850	12,000	3.98	4,700

2. CRU Vents

A CRU is designed to reform (*i.e.,* change the chemical structure of) naphtha into higher-octane aromatics. Over time, coke deposits form on the reforming catalyst, which reduces the catalyst activity. When catalyst activity is reduced to a certain point, the catalyst is regenerated by burning the coke off of the catalyst. Prior to this coke burn-off process, the catalyst (or reactor vessel containing the catalyst) must be removed from active service and organics remaining on the catalyst (or in the reactor) must be purged from the system. This is generally accomplished by depressurizing the vessel to a certain vessel pressure, then re-pressurizing the vessel with nitrogen and depressurizing the vessel again. The re-pressurization and depressurization process is repeated several times until all organics have been purged from the system. The organic HAP emissions from this depressurization/purge cycle vent are typically controlled by directing the purge gas directly to the CRU process heater or venting the gas to a flare.

Refinery MACT 2 requires a 98-percent reduction of organic HAP measured as total organic carbon (TOC) or non-methane TOC or an outlet concentration of 20 ppmv or less (dry basis, as hexane, corrected to 3-percent oxygen), whichever is less stringent, for this CRU depressurization/purge cycle vent (purging prior to coke-burn-off). The emission limits for organic HAP for the CRU do not apply to emissions from process vents during depressuring and purging operations when the reactor vent pressure is 5 psig or less. The Refinery MACT 2 requirements were based on the typical operation of CRU utilizing sequential pressurization and passive depressurization. The 5 psig pressure limit exclusion was provided based on state permit conditions, which recognized that depressurization to an APCD (without other active motive of flow) is limited by the back pressure of the control system, which is often a flare or process heater. Source testing information collected from the 2011 Refinery ICR indicates that facilities have interpreted the rule to allow the 5 psig pressure limit exclusion to be used by units using active purging techniques (such as continuous nitrogen purge or vacuum pump on the CRU reactor at low pressures) to discharge to the atmosphere without emission controls. The information collected indicates that HAP emissions from a continuous, active purging technique could result in emissions of HAP from CRU depressurization vents much higher than expected to be allowed under the Refinery MACT 2 requirements, which presumed sequential re-pressurization and purging cycles. The testing information received indicated that at one facility, the active purge vent had non-methane TOC concentrations of 700 to 10,000 ppmv (dry basis, as hexane, corrected to 3-percent oxygen) compared to less than 10 ppmv for the typical passive purge vent tested. The annual HAP emissions for the CRU with the active purge vent were estimated to exceed 10 tpy, while a comparable unit using the cyclic re-pressurization and passive depressurization purge technique is projected to have HAP emissions of less than 0.1 tpy.

Therefore, we are proposing to amend the exclusion in 40 CFR 63.1566(a)(4) to clarify the application of the 5 psig exclusion, consistent with the MACT floor under CAA section 112(d)(2) and (3). Specifically, we are limiting the vessel pressure limit exclusion to apply only to passive vessel depressurization. Units utilizing active purging techniques have a motive of flow that can be used to direct the purge gas to a control system, regardless of the CRU vessel pressure. If a CRU owner or operator uses active purging techniques (*e.g.,* a continual nitrogen purge) or active vessel depressurization (*e.g.,* vacuum pump), then the 98-percent reduction or 20 ppmv TOC emission limits would apply to these discharges regardless of the vessel pressure.

3. Refinery Flares

The EPA is proposing under CAA section 112(d)(2) and (3) to amend the operating and monitoring requirements for petroleum refinery flares. We have determined that the current requirements for flares are not adequate to ensure compliance with the Refinery MACT standards. In the development of Refinery MACT 1, the EPA determined that the average emission limitation achieved by the best-performing 12

percent of existing sources was established as the use of combustion controls for miscellaneous process vents. Further, the EPA stated that ''data analyses conducted in developing previous NSPS and the [National Emission Standards for Organic Hazardous Air Pollutants (40 CFR part 63, subparts F, G, and H)] HON determined that combustion controls can achieve 98-percent organic HAP reduction or an outlet organic HAP concentration of 20 ppmv for all vent streams'' (59 FR 36139, July 15, 1994). The requirements applicable to flares at refineries are set forth in the General Provisions to 40 CFR part 63 and are cross-referenced in Refinery MACT 1 and 2. In general, flares used as APCD were expected to achieve 98-percent HAP destruction efficiencies when designed and operated according to the requirements in the General Provisions. Recent studies on flare performance, however, indicate that these General Provisions requirements are inadequate to ensure proper performance of refinery flares, particularly when assist steam or assist air is used. Over the last decade, flare minimization efforts at petroleum refineries have led to an increasing number of flares operating at well below their design capacity, and while this effort has resulted in reduced flaring of gases at refineries, situations of over-assisting with steam or air have become exacerbated, leading to the degradation of flare combustion efficiency. Therefore, these amendments are necessary to ensure that refineries that use flares as APCD meet the MACT standards at all times when controlling HAP emissions.

Refinery MACT 1 and 2 require flares used as an APCD to meet the operational requirements set forth in the General Provisions at 40 CFR 63.11(b). These General Provisions requirements specify that flares shall be: (1) Steam-assisted, air-assisted, or non-assisted; (2) operated at all times when emissions may be vented to them; (3) designed for and operated with no visible emissions (except for periods not to exceed a total of 5 minutes during any 2 consecutive hours); and (4) operated with the presence of a pilot flame at all times. The General Provisions also specify requirements for both the minimum heat content of gas combusted in the flare and maximum exit velocity at the flare tip. The General Provisions only specify monitoring requirements for the presence of the pilot flame and the operation of a flare with no visible emissions. For all other operating limits, Refinery MACT 1 and 2 require an initial performance evaluation to demonstrate compliance but there are no specific monitoring requirements to ensure continuous compliance. As noted previously, flare performance tests conducted over the past few years suggest that the current regulatory requirements are insufficient to ensure that refinery flares are operating consistently with the 98-percent HAP destruction efficiencies that we determined were the MACT floor.

In 2012, the EPA compiled information and test data collected on flares and summarized its preliminary findings on operating parameters that affect flare combustion efficiency (see technical report, *Parameters for Properly Designed and Operated Flares,* in Docket ID Number EPA–HQ–OAR–2010–0682). The EPA submitted the report, along with a charge statement and a set of charge questions to an external peer review panel.[27] The panel concurred with the EPA's assessment that three primary factors affect flare performance: (1) The flow of the vent gas to the flare; (2) the amount of assist media (*e.g.,* steam or air) added to the flare; and (3) the combustibility of the vent gas/assist media mixture in the combustion zone (*i.e.,* the net heating value, lower flammability, and/or combustibles concentration) at the flare tip.

Following is a discussion of requirements we are proposing for refinery flares, along with impacts and costs associated with these new requirements. Specifically, this action proposes that refinery flares operate pilot flame systems continuously and with automatic re-ignition systems and that refinery flares operate with no visible emissions. In addition, this action also consolidates requirements related to flare tip velocity and proposes new operational and monitoring requirements related to the combustion zone gas. Prior to these proposed amendments, Refinery MACT 1 and 2 cross-reference the General Provisions requirements at 40 CFR 63.11(b) for the operational requirements for flares used as APCD. Rather than revising the General Provisions requirements for flares, which would impact dozens of different source categories, this proposal will specify all refinery flare operational and monitoring requirements specifically in Refinery MACT 1 and cross-reference these same requirements in Refinery MACT 2. All of the requirements for flares operating at petroleum refineries in this proposed rulemaking are intended to ensure compliance with the Refinery MACT 1 and 2 standards when using a flare as an APCD.

a. Pilot Flames

Refinery MACT 1 and 2 reference the flare requirements in the General Provisions, which require a flare used as an APCD device to operate with a pilot flame present at all times. Pilot flames are proven to improve flare flame stability; even short durations of an extinguished pilot could cause a significant reduction in flare destruction efficiency. In this action, we are proposing to remove the cross-reference to the General Provisions and instead include the requirement that flares operate with a pilot flame at all times and be continuously monitored for using a thermocouple or any other equivalent device in Refinery MACT 1 and 2. We are also proposing to amend Refinery MACT 1 and 2 to add a new operational requirement to use automatic relight systems for all flare pilot flames. An automatic relight system provides a quicker response time to relighting a snuffed-out flare compared to manual methods and thereby results in improved flare flame stability. In comparison, manual relighting is much more likely to result in a longer period where the pilot remains unlit. Because of safety issues with manual relighting, we anticipate that nearly all refinery flares are already equipped with an automated device to relight the pilot flame in the event it is extinguished. Also, due to the possibility that a delay in relighting the pilot could result in a flare not meeting the 98-percent destruction efficiency for the period when the pilot flame is out, we are proposing to amend Refinery MACT 1 and 2 to add this requirement to ensure that the pilot operates at all times.

b. Visible Emissions

Refinery MACT 1 and 2 reference the flare requirements in the General Provisions, which require a flare used as an APCD to operate with visible emissions for no more than 5 minutes in a 2-hour period. Owners or operators of these flares are required to conduct an initial performance demonstration for visible emissions using EPA Method 22 of 40 CFR part 60, Appendix A–7. We are proposing to remove the cross-reference to the General Provisions and include the limitation on visible emissions in Refinery MACT 1 and 2. In addition, we are proposing to amend Refinery MACT 1 and 2 to add a requirement that a visible emissions test be conducted each day and whenever visible emissions are observed from the flare. We are proposing that owners or

[27] These documents can also be found at *http://www.epa.gov/ttn/atw/petref.html.*

operators of flares monitor visible emissions at a minimum of once per day using an observation period of 5 minutes and EPA Method 22 of 40 CFR part 60, Appendix A–7. Additionally, any time there are visual emissions from the flare, we are proposing that another 5-minute visible emissions observation period be performed using EPA Method 22 of 40 CFR part 60, Appendix A–7, even if the minimum required daily visible emission monitoring has already been performed. For example, if an employee observes visual emissions or receives notification of such by the community, the owner or operator of the flare would be required to perform a 5-minute EPA Method 22 observation in order to check for compliance upon initial observation or notification of such event. We are also proposing that if visible emissions are observed for greater than one continuous minute during any of the required 5-minute observation periods, the monitoring period shall be extended to 2 hours.

Industry representatives have suggested to the EPA that flare combustion efficiency is highest at the incipient smoke point (the point at which black smoke begins to form within the flame). They stated that the existing limit for visible emissions could be increased from 5 minutes to 10 minutes in a 2-hour period to encourage operation near the incipient smoke point (see memorandum, *Meeting Minutes for February 19, 2013, Meeting Between the U.S. EPA and Representatives from the Petroleum Refining Industry,* in Docket ID Number EPA–HQ–OAR–2010–0682). While we agree that operating near the incipient smoke point results in good combustion at the flare tip, we disagree that the allowable period for visible emissions be increased from 5 to 10 minutes for a 2-hour period. Smoking flares can contribute significantly to emissions of particulate matter 2.5 micrometers in diameter and smaller ($PM_{2.5}$) emissions, and we are concerned that increasing the allowable period of visible emissions from 5 minutes to 10 minutes for every 2-hour period could result in an increase in the $PM_{2.5}$ emissions from flares.

As discussed later in this section, we are proposing additional operational and monitoring requirements for refinery flares which we expect will result in refineries installing equipment that can be used to fine-tune and control the amount of assist steam or air introduced at the flare tip such that combustion efficiency of the flare will be maximized. These monitoring and control systems will assist refinery flare owners or operators operating near the incipient smoke point without exceeding the visible emissions limit. While combustion efficiency may be highest at the incipient smoke point, it is not significantly higher than the combustion efficiency achieved by these proposed operating limits, discussed in section IV.A.3.d of this preamble. As seen in the performance curves for flares (see technical memorandum, *Petroleum Refinery Sector Rule: Operating Limits for Flares,* in Docket ID Number EPA–HQ–OAR–2010–0682), there is very limited improvement in flare performance beyond the performance achieved at these proposed operating limits. We solicit comments and data on appropriate periods of visible emissions that would encourage operation at the incipient smoke point while not significantly increasing $PM_{2.5}$ emissions.

c. Flare Tip Velocity

The General Provisions at 40 CFR 63.11(b) specify maximum flare tip velocities based on flare type (non-assisted, steam-assisted, or air-assisted) and the net heating value of the flare vent gas. These maximum flare tip velocities are required to ensure that the flame does not ''lift off'' the flare, which could cause flame instability and/or potentially result in a portion of the flare gas being released without proper combustion. We are proposing to remove the cross-reference to the General Provisions and consolidate the requirements for maximum flare tip velocity into Refinery MACT 1 and 2 as a single equation, irrespective of flare type (*i.e.,* steam-assisted, air-assisted or non-assisted). Based on our analysis of the various studies for air-assisted flares, we identified air-assisted test runs with high flare tip velocities that had high combustion efficiencies (see technical memorandum, *Petroleum Refinery Sector Rule: Evaluation of Flare Tip Velocity Requirements,* in Docket ID Number EPA–HQ–OAR–2010–0682). These test runs exceeded the maximum flare tip velocity limits for air-assisted flares using the linear equation in 40 CFR 63.11(b)(8). When these test runs were compared with the test runs for non-assisted and steam-assisted flares, the air-assisted flares appeared to have the same operating envelope as the non-assisted and steam-assisted flares. Therefore, we are proposing that air-assisted flares at refineries use the same equation that non-assisted and steam-assisted flares currently use to establish the flare tip velocity operating limit.

In developing these proposed flare tip velocity requirements, we considered whether any adjustments to these velocity equations were necessary. The flare tip velocity equations require the input of the net heating value of the vent gas going to the flare, as opposed to the net heating value of the gas mixture at the flare tip (*i.e.,* the combustion zone gas). As discussed later in this section, we found that the performance of the flare was much more dependent on the net heating value of the gas mixture in the combustion zone than on the net heating value of only the vent gas going into the flare (excluding all assist media). We considered replacing the term in the velocity equation for the net heating value of the vent gas going into the flare with the net heating value of the gas mixture in the combustion zone. However, the steam addition rates were not reported for the tests conducted to evaluate flame stability as a function of flare tip velocity, so direct calculation of all the terms needed for calculating the net heating value in the combustion zone could not be made. At higher flare tip velocities, we expect that the steam assist rates would be small in comparison to the total vent gas flow rate, so there would not be a significant difference between the net heating value of the vent gas going into the flare and the combustion zone gas net heating value for the higher velocity flame stability tests. We request comment on the need and/or scientific reasons to use the flare vent gas net heating value versus the combustion zone net heating value when determining the maximum allowable flare tip velocity.

In the 2012 flare peer review, we also discussed the effect of flame lift off and velocity on flare flame stability (see technical report, *Parameters for Properly Designed and Operated Flares,* in Docket ID Number EPA–HQ–OAR–2010–0682). In looking at ways of trying to prohibit flame instability, we examined the use of the Shore equation as a means to limit flare tip velocity. However, after receiving many comments on use of this equation from the peer reviewers, the uncertainty with how well the Shore equation models the large range of flare operation, and the limited dataset with which recent testing used high velocities (all recent test runs were performed at 10 feet per second or less), we determined that use of the existing velocity equation discussed above was still warranted.

We are also proposing for Refinery MACT 1 and 2 to not include the special flare tip velocity equation in the General Provisions at 40 CFR 63.11(b)(6)(i)(A) for non-assisted flares with hydrogen content greater than 8 percent. This equation, which was developed based on limited data from a chemicals manufacturer, has very limited

applicability for petroleum refinery flares in that it only provides an alternative for non-assisted flares with large quantities of hydrogen. Approximately 90 percent of all refinery flares are either steam- or air-assisted. Furthermore, we are proposing compliance alternatives in this section that we believe provide a better way for flares at petroleum refineries with high hydrogen content to comply with the rule while ensuring proper destruction performance of the flare (see section IV.A.3.d of this preamble for additional details). Therefore, we are proposing to not include this special flare tip velocity equation as a compliance alternative for refinery flares. We request comment on the need to include this equation. If a commenter supports inclusion of this equation, we request that the commenter submit supporting documentation regarding the vent gas composition and flows and, if available, combustion efficiency determinations that indicate that this additional equation is needed and is appropriate for refinery flares. We also request documentation that the maximum allowable flare tip velocity predicted by this equation adequately ensures proper combustion efficiency.

The General Provisions require an initial demonstration that a flare used as an APCD meets the applicable flare tip velocity requirement in 40 CFR 63.11(b). However, most refinery flares can have highly variable vent gas flows and a single initial demonstration is insufficient to demonstrate continuous compliance with the flare tip velocity requirement. Consequently, we are proposing to amend Refinery MACT 1 and 2 to require continuous monitoring to determine flare tip velocity, calculated by monitoring the flare vent gas volumetric flow rate and dividing by the cross-sectional area of the flare tip. As an alternative to installing continuous volumetric flow rate monitors, we are proposing that the owner or operator may elect to install a pressure- and temperature-monitoring system and use engineering calculations to determine the flare tip velocity.

d. Refinery Flare Operating and Monitoring Requirements

The current requirements for flares in the General Provisions specify that the flare vent gas must meet a minimum net heating value of 200 British thermal units per standard cubic foot (Btu/scf) for non-assisted flares and 300 Btu/scf for air- and steam-assisted flares. Refinery MACT 1 and 2 reference these requirements, but neither the General Provisions nor Refinery MACT 1 and 2 include specific monitoring requirements to monitor the net heating value of the vent gas. Moreover, recent flare testing results indicate that this parameter alone does not adequately address instances when the flare may be over-assisted since it only considers the gas being combusted in the flare and nothing else (*e.g.,* no assist media). However, many industrial flares use steam or air as an assist medium to protect the design of the flare tip, promote turbulence for the mixing, induce air into the flame and operate with no visible emissions. Using excessive steam or air results in dilution and cooling of flared gases and can lead to operating a flare outside its stable flame envelope, reducing the destruction efficiency of the flare. In extreme cases, over-steaming or excess aeration can actually snuff out a flame and allow regulated material to be released into the atmosphere completely uncombusted. Since approximately 90 percent of all flares at refineries are either steam- or air-assisted, it is critical that we ensure the assist media be accounted for in some form or fashion. Recent flare test data have shown that the best way to account for situations of over-assisting is to consider the properties of the mixture of all gases at the flare tip in the combustion zone when evaluating the ability to combust efficiently. As discussed in the introduction to this section, the external peer review panel concurred with our assessment that the combustion zone properties at the flare tip are critical parameters to know in determining whether a flare will achieve good combustion. The General Provisions, however, solely rely on the net heating value of the flare vent gas.

We are proposing to add definitions of two key terms relevant to refinery flare performance. First, we are proposing to define ''flare vent gas'' to include all waste gas, sweep gas, purge gas and supplemental gas, but not include pilot gas or assist media. We are proposing this definition because information about ''flare vent gas'' (*e.g.,* flow rate and composition) is one of the necessary inputs needed to evaluate the make-up of the combustion zone gas. To that end, we are also proposing to define the ''combustion zone gas'' as flare vent gas plus the total steam-assist media and premix assist air that is supplied to the flare.

Based on our review of the recent flare test data, we have determined that the following combustion zone operational limits can be used to determine good combustion: Net heating value (Btu/scf), lower flammability limit (LFL) or a total combustibles fraction (*e.g.,* a simple carbon count). In this action, we are proposing these new operational limits, along with methods for determining these limits in the combustion zone at the flare tip for steam-assisted, air-assisted and non-assisted flares to ensure that there is enough combustible material readily available to achieve good combustion.

For air-assisted flares, use of too much perimeter assist air can lead to poor flare performance. Based on our analysis, we found that including the flow rate of perimeter assist air in the calculation of combustion zone operational limits in itself does not identify all instances of excess aeration. The data suggest that the diameter of the flare tip, in concert with the amount of perimeter assist air, provides the inputs necessary to calculate whether or not this type of flare is over-assisted. Therefore, we are proposing that in addition to complying with combustion zone operational limits to ensure that there is enough combustible material available to adequately combust the gas and pass through the flammability region, air-assisted flares would also comply with an additional dilution parameter that factors in the flow rate of the flare vent gas, flow rates of all assist media (including perimeter assist air), and diameter of flare tip to ensure that degradation of flare performance from excess aeration does not occur. This dilution parameter is consistent with the combustion theory that the more ''time'' the gas spends in the flammability region above the flare tip, the better it will combust. Also, since both the volume of the combustion zone (represented by the diameter here) and how quickly this gas is diluted to a point below the flammability region (represented by perimeter assist air flow rate) characterize this ''time,'' it makes sense that we propose such a term (see technical memorandum, *Petroleum Refinery Sector Rule: Operating Limits for Flares,* in Docket ID Number EPA–HQ–OAR–2010–0682).

It should be noted that in the 2012 flare peer review report, we considered a limit for perimeter assist air via the stoichiometric air ratio. This stoichiometric air ratio is the ratio of the actual mass flow rate of assist air to the theoretical stoichiometric mass flow rate of air (based on complete chemical combustion of fuel to carbon dioxide (CO_2) and water) needed to combust the flare vent gas. However, we are not proposing to include this term as part of the calculation methodology, as we have determined that the dilution parameter discussed in this section better assures that air-assisted flare performance is not degraded due to excess aeration.

The proposed rule allows the owner or operator flexibility to select the form of the combustion zone operational limit (*i.e.,* net heating value, LFL, or total combustibles fraction) with which to comply in order to provide facilities the option of using monitors they may already have in place. The monitoring methods we are proposing take into account the combustible properties of all gas going to the flare (*i.e.,* flare vent gas, assist gas, and premix air) that affects combustion efficiency, and they can be used to determine whether a flare has enough combustible material to achieve the desired level of control (and whether it is being over-assisted). These methods require the owner or operator to input the flow of the vent gas to the flare, the characteristics of the vent gas going to the flare (*i.e.,* either a heat content (Btu/scf), LFL, or total combustible fuel content, depending on how the operational limit is expressed), and the flow of assist media added to the flare.

To estimate the LFL, we are proposing to use a calculation method based on the Le Chatelier equation. The Le Chatelier calculation uses the reciprocal of the volume-weighted average over the LFL of the individual compounds in the gas mixture to estimate the LFL of the gas mixture. Although Le Chatelier's equation was originally limited to binary mixtures of combustible gases, we are proposing a method that was developed by Karim, et al. (1985) and assumes a LFL of infinity for inert gases. We are also aware of other methods and/or adjustments that can be made to the Le Chatelier equation in order to calculate a more accurate estimate of the LFL of a gas mixture (see technical memorandum, *Parameters for Properly Designed and Operated Flares,* in Docket ID Number EPA–HQ–OAR–2010–0682). We are soliciting comment on the use of this proposed method.

Recent data indicate that one set of operational limits may not be sufficient for all refinery flares. Flares that receive vent gas containing significant levels of both hydrogen and olefins often exhibit lower combustion efficiencies than flares that receive vent gas with only one (or none) of these compounds. Therefore, we are proposing more stringent operational limits for flares that simultaneously receive vent gas containing significant levels of both hydrogen and olefins (see technical memorandum, *Petroleum Refinery Sector Rule: Operating Limits for Flares,* in Docket ID Number EPA–HQ–OAR–2010–0682). Although the minimum net heating value in the combustion zone (*i.e.,* Btu/scf) is a good indicator of combustion efficiency, as noted in the flare peer review report, the LFL and combustibles concentration (or total combustibles) in the combustion zone are also good indicators of flare combustion efficiency. For some gas mixtures, such as gases with high hydrogen content, the LFL or combustibles concentration in the combustion zone may be better indicators of performance than net heating value. Consequently, we are proposing operational limits expressed all three ways, along with associated monitoring requirements discussed later in this section.

The three operating limits were established in such a way that each limit is protective on its own. As such, the owner or operator may elect to comply with any of the three alternative operating limits at any time, provided they use a monitoring system capable of determining compliance with each of the proposed alternative operating limits on which they rely (see technical memorandum, *Petroleum Refinery Sector Rule: Operating Limits for Flares,* in Docket ID Number EPA–HQ–OAR–2010–0682). For example, the owner or operator may elect to install monitoring for only one of the three alternative operating limits, in which case the owner or operator must comply with that selected operating limit at all times. If the owner or operator installs a system capable of monitoring for all three of the alternative operating limits, the owner or operator can choose which of the three operating limits the source will rely on to demonstrate compliance.

A summary of the operating limits specified in this proposed rule is provided in Table 3 of this preamble. We are proposing that owners or operators of flares used as APCD would conduct an initial performance test to determine the values of the parameters to be monitored (*e.g.,* the flow rate and heat content of the incoming flare vent gas, the assist media flow rate, and pre-mix air flow rate, if applicable) in order to demonstrate continuous compliance with the operational limits in Table 3. We are proposing to require owners or operators to record and calculate 15-minute block average values for these parameters. Our rationale for selecting a 15-minute block averaging period is provided in section IV.A.3.e of this preamble.

TABLE 3—OPERATING LIMITS FOR FLARES IN THIS PROPOSED ACTION

Operating parameter [a]	Operating limits: Flares without hydrogen-olefin interaction [b]	Operating limits: Flares with hydrogen-olefin interaction [b]
Combustion zone parameters for all flares		
NHV_{cz}	≥270 Btu/scf	≥380 Btu/scf.
LFL_{cz}	≤0.15 volume fraction	≤0.11 volume fraction.
C_{cz}	≥0.18 volume fraction	≥0.23 volume fraction.
Dilution parameters for flares using perimeter assist air		
NHV_{dil}	≥22 Btu/ft^2	≥32 Btu/ft^2.
LFL_{dil}	≤2.2 volume fraction/ft	≤1.6 volume fraction/ft.
C_{dil}	≥0.012 volume fraction-ft	≥0.015 volume fraction-ft.

[a] The operating parameters are:
NHV_{cz} = combustion zone net heating value.
LFL_{cz} = combustion zone lower flammability limit.
C_{cz} = combustion zone combustibles concentration.
NHV_{dil} = net heating value dilution parameter.
LFL_{dil} = lower flammability limit dilution parameter.
C_{dil} = combustibles concentration dilution parameter.

[b] Hydrogen-Olefin interactions are assumed to be present when the concentration of hydrogen and olefins in the combustion zone exceed all three of the following criteria:
(1) The concentration of hydrogen in the combustion zone is greater than 1.2 percent by volume.
(2) The cumulative concentration of olefins in the combustion zone is greater than 2.5 percent by volume.

(3) The cumulative concentration of olefins in the combustion zone plus the concentration of hydrogen in the combustion zone is greater than 7.4 percent by volume.

Btu/ft^2 = British thermal units per square foot.

We are soliciting comment on the appropriateness of the operating limits and dilution parameters in Table 3 of this preamble and whether they ensure that refinery flares operate in a manner that that will ensure compliance with the MACT requirements for vents to achieve a 98-percent organic HAP reduction.

Combustion zone gas monitoring alternatives. As discussed previously in this section, we are proposing to define the combustion zone gas as the mixture of gas at the flare tip consisting of the flare vent gas, the total steam-assist media and premix assist air. In order to demonstrate compliance with the three combustion zone parameter operating limits of net heating value, LFL and total combustibles fraction, the owner or operator would need to monitor four things: (1) Flow rate of the flare vent gas; (2) flow rate of total steam assist media; (3) flow rate of premix assist air and (4) specific characteristics associated with the flare vent gas (*e.g.,* heat content, composition). In order to monitor the flow rates of the flare vent gas, total steam assist media, and premix assist air, we are proposing that refinery owners or operators use a continuous volumetric flow rate monitoring system or a pressure- and temperature-monitoring system with use of engineering calculations. We are also proposing use of either of these monitoring methods for purposes of determining the flow rate of perimeter assist air (for compliance with the dilution parameter). However, the one component that will determine how many combustion zone parameter operating limits an owner or operator can comply with is the specific type of monitor used to characterize the flare vent gas.

Monitoring the individual component concentrations of the flare vent gas using an on-line gas chromatograph (GC) along with monitoring vent gas and assist gas flow rates will allow the owner or operator to determine compliance with any of the three proposed combustion zone operating limits and any of the three proposed dilution operating limits (if using air-assisted flares). We considered requiring all refinery owners or operators of flares to only use a GC to monitor the flare vent gas composition but since facilities may have other non-GC monitors already in place (*e.g.,* calorimeters), we are not proposing such a requirement at this time. However, use of a GC can improve refinery flare operation and management of resources. For example, use of a GC to characterize the flare vent gas can lead to product/cost savings for refiners because they could more readily identify and correct instances of product being unintentionally sent to a flare, either through a leaking pressure relief valve or other conveyance that is ultimately routed to the flare header system. In addition, an owner or operator that chooses to use a GC (in lieu of one of the other proposed monitoring alternatives) will be more likely to benefit from the ability to continuously fine-tune their operations (by reducing assist gas addition and/or supplemental gas to the flare) in order to meet any one of the three operating limits. Furthermore, some facilities are already required to use a GC to demonstrate compliance with state flare requirements. We are soliciting comment on the additional benefits that using a GC offers and whether it would be reasonable to require a GC on all refinery flares.

As an alternative to a continuous compositional monitoring system, we are proposing to allow the use of grab samples along with engineering calculations to determine the individual component concentration. Like the on-line GC, the grab sampling option relies on compound speciation and is therefore flexible to use with any form of the operational limits we are proposing. The disadvantage of this option is that if a grab sample indicates non-compliance with the operational limits, the permitting authority could presume non-compliance from the time of the previous grab sample indicating compliance, which would include all 15-minute periods in that time period. However, there are a number of situations where the refinery owner or operator may find this option advantageous. For example, some flares receive flows only from a specific process with a consistent composition and high heat content. In this case, the owner or operator may elect to actively adjust the assist gas flow rates using the expected vent gas composition and rely on the analysis of the grab sample to confirm the expected vent gas composition. This alternative may also be preferred for flares that are used infrequently (non-routine flow flares) or that have flare gas recovery systems designed and operated to recover 100 percent of the flare gas under typical conditions. For these flares, flaring events may be so seldom that the refinery owner or operator may prefer the uncertainty in proactive control to the higher cost of continuous monitors that would seldom be used.

As an alternative to performing a compositional analysis with use of a GC (through either on-line monitoring or analysis of the grab sample), we are proposing that owners or operators of flares may elect to install a device that directly monitors vent gas net heating value (*i.e.,* a calorimeter). If the owner or operator elects this monitoring method, we are proposing that they must comply with the operating limits that are based on the net heating value operating limit. Similarly, we are also proposing that owners or operators of flares may elect to install a device that directly monitors the total hydrocarbon content of the flare vent gas (as a measure of the combustibles concentration). If the owner or operator elects this monitoring method, they must comply with the operating limits that are based on the combustibles concentration.

e. Data Averaging Periods for Flare Gas Operating Limits

We are proposing to use a 15-minute block averaging period for each proposed flare operating parameter (including flare tip velocity) to ensure that the flare is operated within the appropriate operating conditions. As flare vent gas flow rates and composition can change significantly over short periods of time, a short averaging time was considered to be the most appropriate for assessing proper flare performance. Furthermore, since flare destruction efficiencies can fall precipitously fast below the proposed operating limits, short time periods where the operating limits are not met could seriously impact the overall performance of the flare. With longer averaging times, there may be too much opportunity to mask these short periods of poor performance (*i.e.,* to achieve the longer-term average operating limit while not achieving a high destruction efficiency over that time period because of short periods of poor performance).

Moreover, a 15-minute averaging period is in line with the test data and the analysis used to establish the operating limits in this proposed rule. Ninety-three percent of the flare test runs used as a basis for establishing the proposed operating limits ranged in duration from 5 to 30 minutes, and 77

percent of the runs ranged in duration from 5 to 20 minutes. The failure analysis (discussed in section IV.A.3.f of this preamble) considered minute-by-minute test run data, but as there are limitations on how quickly compositional analyses can be conducted, many of the compositional data still reflect set values over 10- to 15-minute time intervals. Because the GC compositional analyses generally require 10 to 15 minutes to conduct, shorter averaging times are not practical. To be consistent with the available test data and to ensure there are no short periods of significantly poor performance, we are proposing 15-minute block averaging times.

Given the short averaging times for the operating limits, we are proposing special calculation methodologies to enable refinery owners or operators to use ''feed forward'' calculations to ensure compliance with the operating limits on a 15-minute block average. Specifically, the results of the compositional analysis determined just prior to a 15-minute block period are to be used for the next 15-minute block average. Owners or operators of flares will then know the vent gas properties for the upcoming 15-minute block period and can adjust assist gas flow rates relative to vent gas flow rates to comply with the proposed operating limits.

Owners or operators of flares that elect to use grab sampling and engineering calculations to determine compliance must still assess compliance on a 15-minute block average. The composition of each grab sample is to be used for the duration of the episode or until the next grab sample is taken. We are soliciting comment on whether this approach is appropriate, and whether grab samples are needed on a more frequent basis to ensure compliance with the operating limits.

f. Other Peer Review Considerations

In an effort to better inform the proposed new requirements for refinery flares, in the spring of 2012 the EPA summarized its preliminary findings on operating parameters that affect flare combustion efficiency in a technical report and put this report out for a letter review. Based on the feedback received, the EPA considered many of the concerns peer reviewers expressed in their comments in the development of this proposal for refinery flares (see memorandum, *Peer Review of ''Parameters for Properly Designed and Operated Flares'',* in Docket ID Number EPA–HQ–OAR–2010–0682). While the more substantive issues have been previously discussed in sections IV.A.3.a through e of this preamble, the following discussion addresses other peer review considerations that the EPA either discussed in the peer review technical document or considered from comments received by the peer review panel that played a role in the development of this proposal.

Test data quality and analysis. For steam-assisted flares, we asked peer reviewers to comment on our criteria for excluding available flare test data from our analyses. In general, peer reviewers considered the EPA's reasons for removing certain test data (prior to performing any final analysis) to be appropriate; however, one reviewer suggested the EPA complete an analysis of quality on the data before applying any criteria, and several reviewers commented on the level of scrutiny of the 10 data points specifically discussed in the technical report for not meeting the combustion zone LFL trend. These reviewers stated it appeared the EPA had scrutinized test data more if it were inconsistent with the LFL threshold conclusions made in the report. Although we felt it was appropriate to discuss specific test data not fitting the trend, we do agree with the reviewers that a more general and standard set of criteria should be applied to all test data prior to making any conclusion. In addition, other peer reviewers saw no reason why the EPA should exclude 0-percent combustion efficiency data points, or data points where smoking occurs, or single test runs when there was also a comparable average test run. Therefore, in response to these peer review comments, the EPA performed a validation and usability analysis on all available test data. This resulted in a change to the population of test data used in our final analysis (see technical memorandum, *Flare Performance Data: Summary of Peer Review Comments and Additional Data Analysis for Steam-Assisted Flares,* in Docket ID Number EPA–HQ–OAR–2010–0682 for a more detailed discussion of the data quality and analysis).

To help determine appropriate operating limits, several peer reviewers suggested the EPA perform a false-positive-to-false-negative comparison (or failure type) analysis between the potential parameters discussed in the technical report as indicators of flare performance. The reviewers suggested that the EPA attempt to minimize the standard error of all false positives (*i.e.,* poor observed combustion efficiency when the correlation would predict good combustion) and false negatives (*i.e.,* good observed combustion efficiency when the correlation would predict poor combustion). In response to these comments, the EPA has conducted a failure analyses of these parameters which helped form the basis for the operating limits we are proposing for flares (see technical memorandum, *Petroleum Refinery Sector Rule: Operating Limits for Flares,* in Docket ID Number EPA–HQ–OAR–2010–0682).

Some peer reviewers contended that it is appropriate for the EPA to round each established operating limit to the nearest whole number, because using a decimal implies far more accuracy and reliability than can be determined from the test data. Based on these comments, we have given more consideration to the number of significant figures used in the operating limits, and we are proposing to use two significant figures for the flare operating limits in these proposed amendments.

Multiple peer reviewers performed additional analyses to try and determine the appropriateness of the limits raised in the technical report. Some peer reviewers tried to fit the data to a curve, others performed various failure analyses, while others looked at different metrics not discussed in the technical report (see memorandum, *Peer Review of ''Parameters for Properly Designed and Operated Flares'',* in Docket ID Number EPA–HQ–OAR–2010–0682). Based on the conclusions drawn from these various analyses, a range of combustion zone net heating value targets from 200 Btu/scf to 450 Btu/scf were identified as metrics that would provide a high level of certainty regarding good combustion in flares (Note: 450 Btu/scf was the assumed to be approximately equivalent to a combustion zone LFL of 10 percent). We solicit comment on this range and the appropriateness for which the operating limits selected in this proposal will ensure compliance with the MACT requirements for vents at petroleum refineries.

Effect of supplemental gas use. Most flares normally operate at a high turndown ratio, which means the actual flare gas flow rate is much lower than what the flare is designed to handle. In addition, steam-assisted flares have a manufacturers' minimum steam requirement in order to protect the flare tip. A combination of high turndown ratio and minimum steam requirement will likely require some owners or operators to add supplemental gas to achieve one of the combustion zone gas operating limits we are proposing here (*e.g.,* combustion zone combustibles concentration (C_{cz}) ≥ 18 volume percent; combustion zone lower flammability limit (LFL_{cz}) ≤ 15 volume percent; or combustion zone net heating value (NHV_{cz}) ≥ 270 Btu/scf). However, fine-

tuning the actual steam flow to the flare should significantly reduce the need for supplemental gas. We considered proposing a steam-to-vent gas ratio limitation on steam-assisted flares. However, a steam-to-vent gas ratio alone cannot fully address over-steaming because it would not account for the variability of chemical properties within the flare gas. We request that commenters on this issue provide supporting documentation on their potential to reduce steam as well as their use of supplemental gas to achieve the proposed operating limit(s), and how it could affect cost and potential emissions. We emphasize that the amount and cost of supplemental gas should be reflective of conditions after any excess steam use has been rectified. It would not be valuable to consider situations where large amounts of supplemental gas are added, while steam is simultaneously added far in excess of the amount recommended by the flare manufacturer or other guidance documents.

In assessing the combustion zone gas and looking at all the gas at the flare tip, another potential source of added heat content comes from the gas being used as fuel to maintain a continuously lit pilot flame. However, since pilot gas is being used as fuel for a continuous ignition source and is burned to create a flame prior to (or at the periphery of) the combustion zone, this gas does not directly contribute to the heat content or flammability of the gas being sent to the flare to be controlled under Refinery MACT 1 or 2. In addition, in looking at available test data, the pilot gas flow rate is generally so small that it does not significantly impact the combustion zone properties at all. Furthermore, by leaving pilot gas out of the combustion zone operating limit calculations, the equations become simplified and a requirement to continuously monitor pilot gas flow rate can be avoided. Therefore, we are proposing that the owner or operator not factor in the pilot gas combustible component (or net heating value) contribution when determining any of the three proposed combustion zone gas operating limits (C_{cz}, LFL_{cz}, or NHV_{cz}).

Effects of wind on flame performance. Several published studies have investigated the significance of wind on the fluid mechanics of a flare flame (see technical memorandum, *Parameters for Properly Designed and Operated Flares,* in Docket ID Number EPA–HQ–OAR–2010–0682). These studies were conducted in wind tunnels at crosswind velocities up to about 60 miles per hour (mph) and have illustrated that increased crosswind velocity can have a strong effect on flare flame dimensions and shape, causing the flame to become segmented or discontinuous, and wake-dominated (*i.e.,* where the flame is bent over on the downwind side of a flare pipe and is imbedded in the wake of the flare tip), which may lead to poor flare performance due to fuel stripping. However, the majority of this research is confined to laboratory studies on flares with effective diameters less than 3 inches, which have been shown not to be representative of industrial-sized flares. Research that does include performance tests conducted on flares scalable to refinery flares (*i.e.,* 3-inch, 4-inch, and 6-inch pipe flares) was conducted with flare tip velocities as low as 0.49 feet per second and crosswind velocities of about 26 mph and less; all tests resulted in good flare performance. Furthermore, there is no indication that crosswind velocities negatively impact flare performance in the recent flare performance tests. These tests were conducted on various sizes of industrial flares (*i.e.,* effective diameters ranging between 12 and 54 inches) in winds of about 22 mph and less, and at relatively low flare tip velocities (*i.e.,* 10 feet per second or less). (See *Parameters for Properly Designed and Operated Flares,* in Docket ID Number EPA–HQ–OAR–2010–0682.)

We are aware of flare operating parameters that consider crosswind velocity; however, using the available flare performance test data, we were unable to determine a clear correlation that would be appropriate for all refinery flares. For example, the momentum flux ratio (MFR) is a measure of momentum strength of the flare exit gas relative to the crosswind (*i.e.,* the product of flare exit gas density and velocity squared divided by the product of air density and crosswind velocity squared). The plume buoyancy factor is the ratio of crosswind velocity to the flare exit gas velocity, and considers the area of the flare pipe. The power factor is the ratio of the power of the crosswind to the power of combustion of the flare gas. Because the available flare performance test data have relatively low flare tip velocities, and crosswind velocities were relatively constant during each test run, we are unable to examine these parameters to the fullest extent.

In light of the data available from performance tests (Gogolek et al., 2010), we asked peer reviewers whether the MFR could be used in crosswind velocities greater than 22 mph at the flare tip to indicate wake-dominated flame situations. We also asked for comment on observations that in the absence of crosswind greater than 22 mph, a low MFR does not necessarily indicate poor flare performance. Peer reviewers suggested that there are no data available from real industrial flares in winds greater than 22 mph to support that MFR could be used to identify wake-dominated flame situations. In addition, we received no further peer review comments that have caused us to reconsider the observation we made in the April 2012 technical report that in the absence of crosswind greater than 22 mph, a low MFR does not necessarily indicate poor flare performance. We request comment with supporting data and rationale on any of these, or other parameters, as a measure of wind effects on flare combustion efficiency.

We considered including observation requirements for detecting segmented or discontinuous wake-dominated flames, especially for winds greater than 22 mph (where limited test data is available). However, owners or operators of flares cannot control the wind speed, and it would be detrimental to increase the quantity of flared gases in high crosswind conditions in efforts to improve the MFR and reduce wake-dominated flow conditions. Furthermore, there is no indication that crosswind velocities negatively impact flare performance in the recent flare performance tests. For these reasons, we are not proposing any flare operating parameter(s) to minimize wind effects on flare combustion efficiency.

g. Impacts of the Flare Operating and Monitoring Requirements

The EPA expects that the newly proposed requirements for refinery flares discussed in this section will affect all flares at petroleum refineries. Based on data received as a result of the Refinery ICR, we estimate that there are 510 flares operating at petroleum refineries and that 285 of these receive flare vent gas flow on a regular basis (*i.e.,* other than during periods of startup, shutdown, and malfunction). Costs were estimated for each flare for a given refinery, considering operational type (*e.g.,* receive flare vent gas flow on a regular basis, use flare gas recovery systems to recover 100 percent of routine flare flow, handle events during startup, shutdown, or malfunction only, etc.) and current monitoring systems already installed on each individual flare. Costs for any additional monitoring systems needed were estimated based on installed costs received from petroleum refineries and, if installed costs were unavailable, costs were estimated based on vendor-purchased equipment. The baseline emission estimate and the emission

reductions achieved by the proposed rule were estimated based on current vent gas and steam flow data submitted by industry representatives. The results of the impact estimates are summarized in Table 4 of this preamble. We note that the requirements for refinery flares we are proposing in this action will ensure compliance with the Refinery MACT standards when flares are used as an APCD. As such, these proposed operational and monitoring requirements for flares at refineries have the potential to reduce excess emissions from flares by approximately 3,800 tpy of HAP, 33,000 tpy of VOC, and 327,000 metric tonnes per year of CO_2e. The VOC compounds are non-methane, non-ethane total hydrocarbons. According to the Component 2 database from the Refinery ICR, there are approximately 50 individual HAP compounds included in the emission inventory for flares, but many of these are emitted in trace quantities. A little more than half of the HAP emissions from flares are attributable to hexane, followed next by benzene, toluene, xylenes, and 1,3-butadiene. For more detail on the impact estimates, see the technical memorandum *Petroleum Refinery Sector Rule: Flare Impact Estimates* in Docket ID Number EPA–HQ–OAR–2010–0682.

TABLE 4—NATIONWIDE COST IMPACTS OF PROPOSED AMENDMENTS TO ENSURE PROPER FLARE PERFORMANCE

Affected source	Total capital investment (million $)	Total annualized costs (million $/yr)
Flare Monitoring	147	36.3

4. Vent Control Bypasses

a. Relief Valve Discharges

Refinery MACT 1 recognized relief valve discharges to be the result of malfunctions. Relief valves are designed to remain closed during normal operation and only release as the result of unplanned and/or unpredictable events. A release from a relief valve usually occurs during an over pressurization of the system. However, emissions vented directly to the atmosphere by relief valves in organic HAP service contain HAP that are otherwise regulated under Refinery MACT 1.

Refinery MACT 1 regulated relief valves through equipment leak provisions that applied only after the pressure relief occurred. In addition the rule followed the EPA's then-practice of exempting startup, shutdown and malfunction (SSM) events from otherwise applicable emission standards. Consequently, with relief valve releases defined as unplanned and nonroutine and the result of malfunctions, Refinery MACT 1 did not restrict relief valve releases to the atmosphere but instead treated them the same as all malfunctions through the SSM exemption provision.

In *Sierra Club* v. *EPA,* 551 F.3d 1019 (D.C. Cir. 2008), the Court determined that the SSM exemption violates the CAA. See section IV.E of this preamble for additional discussion. To ensure this standard is consistent with that decision, these proposed amendments remove the malfunction exemption in Refinery MACT 1 and 2 and provide that emissions of HAP may not be discharged to the atmosphere from relief valves in organic HAP service. To ensure compliance with this amendment, we are also proposing to require that sources monitor relief valves using a system that is capable of identifying and recording the time and duration of each pressure release and of notifying operators that a pressure release has occurred. Pressure release events from relief valves to the atmosphere have the potential to emit large quantities of HAP. Where a pressure release occurs, it is important to identify and mitigate it as quickly as possible. For purposes of estimating the costs of this requirement, we assumed that operators would install electronic monitors on each relief valve that vents to the atmosphere to identify and record the time and duration of each pressure release. However, we are proposing to allow owners and operators to use a range of methods to satisfy these requirements, including the use of a parameter monitoring system (that may already be in place) on the process operating pressure that is sufficient to indicate that a pressure release has occurred as well as record the time and duration of that pressure release. Based on our cost assumptions, the nationwide capital cost of installing these electronic monitors is $9.54 million and the annualized capital cost is $1.36 million per year.

As defined in the Refinery MACT standards, relief valves are valves used only to release unplanned, nonroutine discharges. A relief valve discharge results from an operator error, a malfunction such as a power failure or equipment failure, or other unexpected cause that requires immediate venting of gas from process equipment in order to avoid safety hazards or equipment damage. Even so, to the extent that there are atmospheric HAP emissions from relief valves, we are required to follow the Sierra Club ruling to address those emissions in our rule, and we can no longer exempt them as permitted malfunction emissions as we did under Refinery MACT 1. Our information indicates that there are approximately 12,000 pressure relief valves that vent to the atmosphere (based on the ICR responses) and that the majority of relief valves in the refining industry are not atmospheric, but instead are routed to flares (see letter from API, Docket Item Number EPA–HQ–OAR–2010–0682–0012). We request comment on our approach and on alternatives to our approach to regulating releases from pressure relief valves and also request commenters to provide information supporting any such comments.

b. Bypass Lines

For a closed vent system containing bypass lines that can divert the stream away from the APCD to the atmosphere, Refinery MACT 1 requires the owner or operator to either: (1) Install, maintain and operate a continuous parametric monitoring system (CPMS) for flow on the bypass line that is capable of detecting whether a vent stream flow is present at least once every hour, or (2) secure the bypass line valve in the non-diverting position with a car-seal or a lock-and-key type configuration. Under option 2, the owner or operator is also required to inspect the seal or closure mechanism at least once per month to verify the valve is maintained in the non-diverting position (see 40 CFR 63.644(c) for more details). We are proposing under CAA section 112(d)(2) and (3) that the use of a bypass at any time to divert a Group 1 miscellaneous process vent is a violation of the emission standard, and to specify that if option 1 is chosen, the owner or operator would be required to install,

maintain and operate a CPMS for flow that is capable of recording the volume of gas that bypasses the APCD. The CMPS must be equipped with an automatic alarm system that will alert an operator immediately when flow is detected in the bypass line. We are proposing this revision because, as noted above, APCD are not to be bypassed because doing so could result in a release of regulated organic HAP to the atmosphere. In *Sierra Club v. EPA,* 551 F.3d 1019 (D.C. Cir. 2008), the Court determined that standards under CAA section 112(d) must provide for compliance at all times and a release of uncontrolled HAP to the atmosphere is inconsistent with that requirement.

c. In Situ Sampling Systems (Onstream Analyzers)

The current Refinery MACT 1 definition of ''miscellaneous process vent'' states that ''in situ sampling systems (onstream analyzers)'' are not miscellaneous process vents. 40 CFR 63.641. For several reasons, we are proposing to remove ''in situ sampling systems (onstream analyzers)'' from the list of vents not considered miscellaneous process vents. First, the language used in this exclusion is inconsistent. We generally consider ''in situ sampling systems'' to be non-extractive samplers or in-line samplers. There are certain in situ sampling systems where the measurement is determined directly via a probe placed in the process stream line. Such sampling systems do not have an atmospheric vent, so excluding these from the definition of ''miscellaneous process vent'' is not meaningful. The parenthetical term ''onstream analyzers'' generally refers to sampling systems that feed directly to an analyzer located at the process unit, and has been interpreted to exclude the ''onstream'' analyzer's vent from the definition of miscellaneous process vents. As these two terms do not consistently refer to the same type of analyzer, the provision is not clear.

Second, we find that there is no technical reason to include analyzer vents in a list of vents not considered miscellaneous process vents. For extractive sampling systems and systems with purges, the equipment leak standards in Refinery MACT 1 require that the material be returned to the process or controlled. Thus, the only potential emissions from any sampling system compliant with the Refinery MACT 1 equipment leak provisions would be from the analyzer's ''exhaust gas'' vent. The parenthetical term ''onstream analyzers'' indicates that the focus of the exemption is primarily on the analyzer (or analyzer vent) rather than the sampling system. This phrase has been interpreted to exclude the ''onstream'' analyzer's vent from the definition of miscellaneous process vents. Analyzer venting is expected to be routine (continuous or daily intermittent venting).

We are proposing to delete this exclusion from the definition of ''miscellaneous process vent'' and to require these vents to meet the standards applicable to miscellaneous process vents at all times. We expect most analyzer vents to be Group 2 miscellaneous process vents because analyzer vents are not expected to exceed the 72 pounds per day (lb/day) emissions threshold for Group 1 miscellaneous process vents. However, if there are larger analyzer vents that exceed the 72 lb/day emissions threshold for Group 1 miscellaneous process vents, these emission sources would need to be controlled as a Group 1 miscellaneous process vent under this proposal. We solicit comment on the existence of any onstream analyzers that have VOC emissions greater than 72 lb/day and why such vents are not amenable to control.

d. Refinery Flares and Fuel Gas Systems

The current definition of ''miscellaneous process vent'' in Refinery MACT 1 states that ''gaseous streams routed to a fuel gas system'' are not miscellaneous process vents. Furthermore, the affected source subject to Refinery MACT 1 does not specifically include ''emission points routed to a fuel gas system, as defined in § 63.641 of this subpart.'' The EPA allowed these exemptions for streams routed to fuel gas systems because according to the 1994 preamble for Refinery MACT 1, ''these vents are already controlled to the most stringent levels achievable'' (59 FR 36141, July 15, 1994). Since gaseous streams routed to a fuel gas system are eventually burned as fuel, typically in a boiler or process heater, these combustion controls burning the gaseous streams as fuel effectively achieve this most stringent level of control (*i.e.,* 98-percent organic HAP reduction or an outlet organic HAP concentration of 20 ppmv for all vent streams). However, there can be instances when gaseous streams from the fuel gas system that would otherwise be combusted in a boiler or process heater are instead routed to a flare (*e.g.,* overpressure in the fuel gas system, used as flare sweep gas, used as flare purge gas). In cases where an emission source is required to be controlled in Refinery MACT 1 and 2 but is routed to a fuel gas system, we are proposing that any flare receiving gases from that fuel gas system must comply with the flare operating and monitoring requirements discussed in section IV.A.3 of this preamble.

B. What are the results and proposed decisions based on our technology review?

1. Refinery MACT 1—40 CFR Part 63, Subpart CC

Refinery MACT 1 sources include miscellaneous process vents, storage vessels, equipment leaks, gasoline loading racks, marine vessel loading operations, cooling towers/heat exchange systems, and wastewater.

a. Miscellaneous Process Vents

Many unit operations at petroleum refineries generate gaseous streams containing HAP. These streams may be routed to other unit operations for additional processing (*e.g.,* a gas stream from a reactor that is routed to a distillation unit for separation) or they may be sent to a blowdown system or vented to the atmosphere. Miscellaneous process vents emit gases to the atmosphere, either directly or after passing through recovery and/or APCD. Under 40 CFR 63.643, the owner or operator must reduce organic HAP emissions from miscellaneous process vents using a flare that meets the equipment specifications in 40 CFR 63.11 of the General Provisions (subpart A) or use APCD (*e.g.,* thermal oxidizers, carbon adsorbers) to reduce organic HAP emissions by 98 weight-percent or to a concentration of 20 parts per million by volume (ppmv) dry basis, corrected to 3-percent oxygen.

In the technology review, we did not identify any practices, processes or control technologies beyond those already required by Refinery MACT 1. Therefore, we are proposing that it is not necessary to revise Refinery MACT 1 requirements for miscellaneous process vents pursuant to CAA section 112(d)(6).

b. Storage Vessels

Storage vessels (also known as storage tanks) are used to store liquid and gaseous feedstocks for use in a process, as well as liquid and gaseous products coming from a process. Most storage vessels are designed for operation at atmospheric or near atmospheric pressures; high-pressure vessels are used to store compressed gases and liquefied gases. Atmospheric storage vessels are typically cylindrical with a vertical orientation, and they are constructed with either a fixed roof or a floating roof. Some, generally small,

atmospheric storage vessels are oriented horizontally. High pressure vessels are either spherical or horizontal cylinders.

Section 63.646(a) requires certain existing and new storage vessels to comply with 40 CFR 63.119 through 40 CFR 63.121 of the HON. Under 40 CFR 63.119 through 63.121, storage vessels must be equipped with an internal floating roof with proper seals, an external floating roof with proper seals, an external floating roof converted to an internal floating roof with proper seals or a closed vent system routed to an APCD that reduces HAP emissions by 95 percent. Storage vessels at existing sources that use floating roofs are not required under Refinery MACT 1 to install certain fitting controls included in 40 CFR 63.1119 of the HON (*e.g.,* gaskets for automatic bleeder vents, slit fabric covers for sample wells, flexible fabric seals or gasketed sliding covers for guidepoles and gasketed covers for other roof openings). See 40 CFR 63.646(c).

In 2012, we conducted a general analysis to identify the latest developments in practices, processes and control technologies for storage vessels at chemical manufacturing facilities and petroleum refineries, and we estimated the impacts of applying those practices, processes and technologies to model storage vessels. (See *Survey of Control Technology for Storage Vessels and Analysis of Impacts for Storage Vessel Control Options,* January 20, 2012, Docket Item Number EPA–HQ–OAR–2010–0871–0027.) We used this analysis as a starting point for conducting the technology review for storage vessels at refineries. In this analysis, we identified fitting controls, particularly controls for floating roof guidepoles, and monitoring equipment (liquid level monitors and leak monitors) as developments in practices, processes and control technologies for storage vessels. In our refinery-specific review, we also noted that the Group 1 storage vessel size and vapor pressure thresholds in Refinery MACT 1 were higher than those for storage vessels in MACT standards for other similar industries. Therefore, we also evaluated revising the Group 1 storage vessel thresholds as a development in practices for storage vessels in the refining industry.

We used data from our 2011 ICR to evaluate the impacts of requiring the additional controls identified in the technology review for the petroleum refinery source category. The emission reduction options identified during the technology review are: (1) Requiring guidepole controls and other fitting controls for existing external or internal floating roof tanks as required in the Generic MACT for storage vessels (40 CFR part 63, subpart WW) in 40 CFR 63.1063; (2) option 1 plus revising the definition of Group 1 storage vessel to include smaller capacity storage vessels and/or storage vessels containing materials with lower vapor pressures and (3) option 2 plus requiring additional monitoring to prevent roof landings, liquid level overfills and to identify leaking vents and fittings from tanks. We identified options 1 and 2 as developments in practices, processes and control technologies because these options are required for similar tanks in some chemical manufacturing MACT standards and we believe they are technologically feasible for storage vessels at refineries (*e.g.,* Generic MACT, the HON). Option 3 is also an improvement in practices because these monitoring methods have been required for refineries by other regulatory agencies.

Under option 1, we considered the impacts of requiring improved deck fittings and controls for guidepoles as is required for other chemical manufacturing sources in the Generic MACT. Specifically, we considered these controls for storage vessels with existing internal or external floating roof tanks. This option also includes the inspection, recordkeeping, and reporting requirements set forth in the Generic MACT to account for the additional requirements for fitting controls. We are aware of recent waiver requests to EPA to allow in-service, top-side inspections instead of the out-of-service inspections required on a 10-year basis for internal floating roof tanks for facilities that are currently subject to 40 CFR part 60, subpart Kb and Refinery MACT 1. The requirements of Generic MACT allow for this option if there is visual access to all the deck components. Under option 1, we considered the Generic MACT provisions for in-service, top-side inspection. We are requesting comment on whether or not these in-service inspections are adequate for identifying conditions that are indicative of deck, fitting, and rim seal failures; we are also requesting comment on methods to effectively accomplish top-side inspections.

For option 2, we evaluated revising the definition of Group 1 storage vessels to include smaller capacity storage vessels and/or storage vessels with lower vapor pressure, such that these additional storage vessels would be subject to the Group 1 control requirements. For storage vessels at existing sources, Refinery MACT 1 currently defines Group 1 storage vessels to be those with a capacity of 177 cubic meters (46,760 gallons) or greater, and a true vapor pressure of 10.4 kilopascals (1.5 pounds per square inch absolute (psia)) or greater. Under option 2, we evaluated the impacts of changing the definition of Group 1 storage vessels to include storage vessels with a capacity of 151 cubic meters (40,000 gallons) or greater and a true vapor pressure of 5.2 kilopascals (0.75 psia) or greater, and also evaluated including storage vessels with a capacity of 76 cubic meters (20,000 gallons) or greater (but less than 151 cubic meters), provided the true vapor pressure of the stored liquid is 13.1 kilopascals (1.9 psia) or greater. These thresholds are consistent with storage vessel standards already required for the chemical industry (*e.g.,* the HON). We believe the predominant effect of changing these thresholds will be fixed roof tanks at existing petroleum refineries shifting from Group 2 storage vessels to Group 1 storage vessels. These fixed roof tanks would thus need to be retrofitted with floating roofs or vented to an APCD in order to comply with the provisions for Group 1 storage vessels. We estimated the impacts of option 2 by assuming all uncontrolled fixed roof storage vessels that meet or exceed the proposed new applicability requirements for Group 1 storage vessels (based on the information collected in the Refinery ICR) would install an internal floating roof with a single rim seal and deck fittings to the existing fixed roof tank. The costs of these fixed roof retrofits were added to the costs determined for option 1 to determine the cost of option 2.

Under option 3, we considered the impacts of including additional monitoring requirements for Group 1 storage vessels (in addition to fitting controls and fixed roof retrofits considered under options 1 and 2). The monitoring requirements evaluated include monitoring of internal or external floating roof tanks with EPA Method 21 (of 40 CFR part 60, Appendix A–7) or optical gas imaging for fittings, and requiring the use of liquid level overfill warning monitors and roof landing warning monitors. These costs were estimated based on the total number of Group 1 storage vessels considering the change in the applicability thresholds included in option 2. For further details on the assumptions and methodologies used in this analysis, see the technical memorandum titled *Impacts for Control Options for Storage Vessels at Petroleum Refineries,* in Docket ID Number EPA–HQ–OAR–2010–0682.

Table 5 of this preamble presents the impacts for the three options considered. Although the options were considered cumulatively, the calculation of the incremental cost effectiveness allows us to assess the impacts of the incremental change between the options. As seen by the incremental cost effectiveness column in Table 5, both options 1 and 2 result in a net cost savings considering the VOC recovery credit for product not lost to the atmosphere from the storage vessel.[28] We seek comment on the appropriateness of the VOC recovery credit we used. The incremental cost effectiveness for option 3 exceeds $60,000 per ton of HAP removed. We consider option 3 not to be cost effective and are not proposing to require this additional monitoring.

Based on this analysis, we consider option 2 to be cost effective. We are, therefore, proposing to revise Refinery MACT 1 to cross-reference the corresponding storage vessel requirements in the Generic MACT (including requirements for guidepole controls and other fittings as well as inspection requirements), and to revise the definition of Group 1 storage vessels to include storage vessels with capacities greater than or equal to 20,000 gallons but less than 40,000 gallons if the maximum true vapor pressure is 1.9 psia or greater and to include storage tanks greater than 40,000 gallons if the maximum true vapor pressure is 0.75 psia or greater.

TABLE 5—NATIONWIDE EMISSIONS REDUCTION AND COST IMPACTS OF CONTROL OPTIONS FOR STORAGE VESSELS AT PETROLEUM REFINERIES

Control option	Capital cost (million $)	Annualized costs without recovery credits (million $/yr)	Emissions reduction, VOC (tpy)	Emissions reduction, HAP (tpy)	Cost effectiveness ($/ton HAP)	Total annualized costs with VOC recovery credit (million $/yr)	Overall cost effectiveness with VOC Rrcovery credit ($/ton HAP)	Incremental cost effectiveness with VOC recovery credit ($/ton HAP)
1	11.9	1.8	11,800	720	2,470	(4.8)	(6,690)	
2	18.5	3.1	14,600	910	3,430	(5.0)	(5,530)	(1,140)
3	36.4	9.6	16,000	1,000	9,580	0.56	560	61,500

c. Equipment Leaks

Equipment leaks are releases of process fluid or vapor from processing equipment, including pump and compressor seals, process valves, relief devices, open-ended valves and lines, flanges and other connectors, agitators and instrumentation systems. These releases occur primarily at the interface between connected components of equipment or in sealing mechanisms.

Refinery MACT 1 requires the owner or operator of an existing source to comply with the equipment leak provisions in 40 CFR part 60, subpart VV (Standards of Performance for Equipment Leaks of VOC in the Synthetic Organic Chemicals Manufacturing Industry) for all equipment in organic HAP service. The term ''in organic HAP service'' means that a piece of equipment either contains or contacts a fluid (liquid or gas) that is at least 5 percent by weight of total organic HAP. Refinery MACT 1 specifies that the owner or operator of a new source must comply with the HON, as modified by Refinery MACT 1. The provisions for both new and existing sources require inspection (either through instrument monitoring using EPA Method 21 of 40 CFR part 60, Appendix A–7, or other method such as visible inspection) and repair of leaking equipment. For existing sources, the leak definition under 40 CFR part 60, subpart VV triggers repair at an instrument reading of 10,000 parts per million (ppm) for all equipment monitored using EPA Method 21 of 40 CFR part 60, Appendix A–7 (*i.e.,* pumps and valves; instrument monitoring of equipment in heavy liquid service and connectors is optional). For new sources, the Refinery MACT 1-modified version of the HON triggers repair of leaks for pumps at 2,000 ppm and for valves at 1,000 ppm. Refinery MACT 1 requires new and existing sources to install a cap, plug or blind flange, as appropriate, on open-ended valves or lines. Refinery MACT 1 does not require instrument monitoring of connectors for either new or existing sources.

We conducted a general analysis to identify the latest developments in practices, processes and control technologies applicable to equipment leaks at chemical manufacturing facilities and petroleum refineries, and we estimated the impacts of applying the identified practices, processes and technologies to several model plants. (See *Analysis of Emissions Reduction Techniques for Equipment Leaks,* December 21, 2011, Docket Item Number EPA–HQ–OAR–2010–0869–0029.) We used this general analysis as a starting point for conducting the technology review for equipment leaks at refineries, but did not identify any developments beyond those in the general analysis. We estimated the impacts of applying the practices, processes and technologies identified in the general analysis to equipment leaks in petroleum refinery processes using the information we collected through the 2011 Refinery ICR. In general, leak detection and repair (LDAR) programs have been used by many industries for years to control emissions from equipment leaks. Over the years, repair methods have improved and owners and operators have become more proficient at implementing these programs. The specific developments identified include: (1) Requiring repair of leaks at a concentration of 500 ppm for valves and 2,000 ppm for pumps for new and existing sources (rather than 10,000 ppm for valves and pumps at existing sources and 1,000 for valves at new sources); (2) requiring monitoring of connectors using EPA Method 21 (of 40 CFR part 60, Appendix A–7) and repair of leaks for valves and pumps at a concentration of 500 ppm; and (3) allowing the use of optical gas imaging devices as an alternative method of monitoring.

The first option we evaluated was to require repair based on a leak definition of 500 ppm for valves and a leak definition of 2,000 ppm for pumps at both new and existing sources. The nationwide costs and emission reduction impacts of applying those lower leak definitions to equipment leaks at petroleum refineries are shown in Table 6 of this preamble. For further details on the assumptions and methodologies used in this analysis, see the technical memorandum titled *Impacts for Equipment Leaks at Petroleum Refineries,* in Docket ID Number EPA–HQ–OAR–2010–0682.

[28] The VOC recovery credit is $560 per ton, based on $1.75/gal price for generic refinery product (gasoline/diesel fuel). (See the technical memorandum titled *Impacts for Control Options for Storage Vessels at Petroleum Refineries,* in Docket ID Number EPA–HQ–OAR–2010–0682 for more details.)

The emissions reduction results in product not being lost by a leak; this additional product can be sold to generate revenue, referred to as a VOC recovery credit. Table 6 shows costs and cost effectiveness both with and without the VOC recovery credit. Based on the estimated organic HAP emission reductions of 24 tpy and the cost effectiveness of $14,100 per ton of organic HAP (including VOC recovery credit), we consider lowering the leak definition not to be a cost-effective option for reducing HAP emissions. We are, therefore, proposing that it is not necessary to revise Refinery MACT 1 pursuant to CAA section 112(d)(6) to require repair of leaking valves at 500 ppm or greater and repair of leaking pumps at 2,000 ppm or greater.

TABLE 6—NATIONWIDE EMISSIONS REDUCTION AND COST IMPACTS OF MONITORING AND REPAIR REQUIREMENTS AT LOWER LEAK DEFINITIONS

[500 ppm for valves; 2,000 ppm for pumps]

Capital cost (million $)	Annualized costs without recovery credits (million $/yr)	Emissions reduction, VOC (tpy)	Emissions reduction, HAP (tpy)	Cost effectiveness ($/ton VOC)	Cost effectiveness ($/ton HAP)	Total annualized costs with VOC recovery credit (million $/yr)	Overall cost effectiveness with VOC recovery credit ($/ton VOC)	Overall cost effectiveness with VOC recovery credit ($/ton HAP)
1.22	0.53	342	24	1,550	22,100	0.34	987	14,100

We note that we are aware that some owners and operators are required to repair leaking valves as low as 100 ppm and pumps as low as 500 ppm. However, we consider requiring repair of leaking valves at 500 ppm or greater and repair of leaking pumps at 2,000 ppm or greater not to be cost effective. As documented in *Analysis of Emissions Reduction Techniques for Equipment Leaks* (December 21, 2011, in Docket ID Number EPA–HQ–OAR–2010–0869), the cost effectiveness for this option would be even higher than the values shown in Table 6 of this preamble.

The second option we considered was connector monitoring and repair. Several standards applying to chemical manufacturing facilities, including the HON, include requirements for connector monitoring using EPA Method 21 (of 40 CFR part 60, Appendix A–7) and requirements for repair of any connector leaks above 500 ppm VOC. Neither the Refinery MACT 1 nor the NSPS for equipment leaks from refineries (40 CFR part 60, subpart GGG and 40 CFR part 60, subpart GGGa) currently require connector monitoring and repair (provisions are provided for connector monitoring in Refinery MACT 1, but they are optional). We evaluated the costs and emissions reduction of requiring connector monitoring and repair requirements for equipment leaks at refineries. The nationwide costs and emission reduction impacts, both with and without VOC recovery credit, are shown in Table 7 of this preamble. For further details on the assumptions and methodologies used in this analysis, see the technical memorandum titled *Impacts for Equipment Leaks at Petroleum Refineries,* in Docket ID Number EPA–HQ–OAR–2010–0682. Based on the high annualized cost ($13.9 million per year) and high cost effectiveness ($153,000 per ton of HAP) of connector monitoring and repair for equipment leaks at refineries, we are proposing that it is not necessary to revise Refinery MACT 1 pursuant to CAA section 112(d)(6) to require connector monitoring using EPA Method 21 (of 40 CFR part 60, Appendix A–7) and repair.

TABLE 7—NATIONWIDE EMISSIONS REDUCTION AND COST IMPACTS OF APPLYING MONITORING AND REPAIR REQUIREMENTS TO CONNECTORS AT PETROLEUM REFINERIES

[500 ppm]

Capital cost (million $)	Annualized costs without recovery credits (million $/yr)	Emissions reduction, VOC (tpy)	Emissions reduction, HAP (tpy)	Cost effectiveness ($/ton VOC)	Cost effectiveness ($/ton HAP)	Total annualized costs with VOC recovery credit (million $/yr)	Overall cost effectiveness with VOC recovery credit ($/ton VOC)	Overall cost effectiveness with VOC recovery credit ($/ton HAP)
52.1	13.9	1,230	86	11,300	161,000	13.2	10,700	153,000

Another development identified was to provide optical gas imaging provisions (including the required instrument specifications, monitoring frequency, and repair threshold) as an alternative monitoring option where instrument monitoring using EPA Method 21 of 40 CFR part 60, Appendix A–7, is required in Refinery MACT 1. Since Refinery MACT 1 was issued, there have been developments in LDAR work practices using remote sensing technology for detecting leaking equipment. In this method of detecting leaks, an operator scans equipment using a device or system specially designed to use one of several types of remote sensing techniques, including optical gas imaging of infrared wavelengths, differential absorption light detection and ranging (DIAL), and solar occultation flux.

The most common remote sensing instrument is a passive system that creates an image based on the absorption of infrared wavelengths (also referred to as a ''camera''). A gas cloud containing certain hydrocarbons (*i.e.,* leaks) will show up as black or white plumes (depending on the instrument settings and characteristics of the leak) on the optical gas imaging instrument screen. This type of instrument is the device on which our evaluation of optical gas imaging instruments is based, and the instrument to which we are referring when we use the term ''optical gas imaging instrument.'' These optical gas imaging instruments can be used to identify specific pieces of equipment that are leaking. Other optical methods, such as DIAL and solar occultation flux, are used primarily to assess emissions downwind of a source. These methods cannot be used to identify specific leaking equipment; they would only measure the aggregate emissions from all equipment and any other source up-wind of the measurement location. While we did review these technologies as discussed further (see the discussion under fenceline monitoring, section IV.B.1.h of this preamble), we do not consider DIAL and solar occultation flux methods to be suitable alternatives to EPA Method 21 for monitoring equipment leaks and are not considering them further in our technology review for equipment leaks.

We expect that all refinery streams ''in organic HAP service'' will include at least one of the compounds visible with an optical gas imaging instrument, such as benzene, methane, propane or butane. Therefore, it is technically feasible to use an optical gas imaging instrument to detect leaks at petroleum refineries. The optical gas imaging device can monitor many more pieces of equipment than can be monitored using instrument monitoring over the same period of time, and we expect that specific requirements for using an optical gas imaging device to detect leaks without accompanying instrument monitoring could be an appropriate alternative to traditional leak detection methods (EPA Method 21, as specified in 40 CFR part 60, Appendix A–7).

Owners and operators currently have the option to use the Alternative Work Practice To Detect Leaks From Equipment (AWP) at 40 CFR 63.11(c), (d) and (e). This AWP includes provisions for using optical gas imaging in combination with annual monitoring using EPA Method 21 of 40 CFR part 60, Appendix A–7. In this proposal, we are considering the use of optical gas imaging without an accompanying requirement to conduct annual monitoring using EPA Method 21, and developing a protocol for using optical gas imaging techniques. We anticipate proposing the protocol as Appendix K to 40 CFR part 60. Rather than specifying the exact instrument that must be used, this protocol would outline equipment specifications, calibration techniques, required performance criteria, procedures for conducting surveys and training requirements for optical gas imaging instrument operators. This protocol would also contain techniques to verify that the instrument selected can image the most prevalent chemical in the monitored process unit. Because field conditions greatly impact detection of the regulated material using optical gas imaging, the protocol would describe the impact these field conditions may have on readings, how to address them and instances when monitoring with this technique is inappropriate. Finally, the protocol would also address difficulties with identifying equipment and leaks in dense industrial areas.

Pursuant to CAA section 112(d)(6), we are proposing to allow refineries to meet the LDAR requirements in Refinery MACT 1 by monitoring for leaks via optical gas imaging in place of EPA Method 21 (of 40 CFR part 60, Appendix A–7), using the monitoring requirements to be specified in Appendix K to 40 CFR part 60. When Appendix K is proposed, we will request comments on that appendix and how those requirements would apply for purposes of this proposed action. We will not take final action adopting use of Appendix K to 40 CFR part 60 for optical gas imaging for refineries subject to Refinery MACT 1 until such time as we have considered any comments on that protocol as it would apply to refineries. We do not yet know the exact requirements of Appendix K to 40 CFR part 60, and this cannot provide a reliable estimate of potential costs at this time. However, we have calculated an initial estimate of the potential costs and emission reduction impacts, assuming that Appendix K to 40 CFR part 60 is similar to the AWP without the annual monitoring using EPA Method 21 of 40 CFR part 60, Appendix A–7. For more information on these potential impacts, see the technical memorandum titled *Impacts for Equipment Leaks at Petroleum Refineries,* in Docket ID Number EPA–HQ–OAR–2010–0682.

d. Gasoline Loading Racks

Loading racks are the equipment used to fill gasoline cargo tanks, including loading arms, pumps, meters, shutoff valves, relief valves and other piping and valves. Emissions from loading racks may be released when gasoline loaded into cargo tanks displaces vapors inside these containers. Refinery MACT 1 specifies that Group 1 gasoline loading racks at refineries must comply with the requirements of the National Emission Standards for Gasoline Distribution Facilities (Bulk Gasoline Terminals and Pipeline Breakout Stations) in 40 CFR part 63, subpart R. The standard specified in 40 CFR part 63, subpart R is an emission limit of 10 milligrams of total organic compounds per liter of gasoline loaded (mg/L). Additionally, 40 CFR part 63, subpart R requires all tank trucks and railcars that are loaded with gasoline to undergo annual vapor tightness testing in accordance with EPA Method 27 of 40 CFR part 60, Appendix A–8.

For our technology review of Group 1 gasoline loading racks subject to Refinery MACT 1, we relied on two separate analyses. First, we previously conducted a technology review for gasoline distribution facilities (71 FR 17353, April 6, 2006), in which no new control systems were identified. Second, more recently, we conducted a general analysis to identify any developments in practices, processes and control technologies for transfer operations at chemical manufacturing facilities and petroleum refineries. (See *Survey of Control Technology for Transfer Operations and Analysis of Impacts for Transfer Operation Control Options,* January 20, 2012, Docket Item Number EPA–HQ–OAR–2010–0871–0021.) We identified several developments as part of this analysis and evaluated the impacts of applying the developments to gasoline loading racks subject to Refinery MACT 1. We have not identified any developments beyond those in the second analysis. The identified developments include controlling loading racks above specific throughput thresholds by submerged loading and by venting displaced emissions from the transport vehicles through a closed vent system to an APCD that reduces organic regulated material emissions by at least 95 percent.

We evaluated the emissions projected using this control technique for a range of different gasoline vapor pressures (to consider the different seasonal formulations of gasoline). We determined that submerged loading in combination with 95-percent control of displaced vapors would allow emissions of 12 to 42 mg/L of gasoline loaded, depending on the vapor pressure of the gasoline (see *Evaluation of the Stringency of Potential Standards for Gasoline Loading Racks at Petroleum Refineries* in Docket ID Number EPA–HQ–OAR–2010–0682.) The current Refinery MACT 1 emission limit for gasoline loading is 10 mg/L of gasoline loaded. We did not identify any developments in practices, process and control technologies for gasoline loading racks that would reduce emissions beyond the levels already in Refinery MACT 1. Therefore, we are proposing that it is not necessary to revise Refinery MACT 1 requirements for gasoline loading racks pursuant to CAA section 112(d)(6).

e. Marine Vessel Loading Operations

Marine vessel loading operations load and unload liquid commodities in bulk, such as crude oil, gasoline and other fuels, and naphtha. The cargo is pumped from the terminal's large, above-ground storage tanks through a network of pipes and into a storage compartment (tank) on the vessel. The HAP emissions are the vapors that are displaced during the filling operation. Refinery MACT 1 specifies that marine tank vessel loading operations at refineries must comply with the requirements in 40 CFR part 63, subpart Y (National Emission Standards for Marine Tank Vessel Loading Operations, ''Marine Vessel MACT'').

We previously completed a technology review of the Marine Vessel MACT (40 CFR part 63, subpart Y) and issued amendments to subpart Y in

2011 (76 FR 22595, Apr. 21, 2011). The analysis conducted for the marine vessel loading source category specifically considered loading of petroleum products such as conventional and reformulated gasoline. As such, the conclusions drawn from this analysis are directly applicable to marine vessel loading operations at petroleum refineries. We have not identified any developments beyond those addressed in that analysis.

The Marine Vessel MACT required add-on APCD for loading operations with HAP emissions equal to or greater than 10 tpy of a single pollutant or 25 tpy of cumulative pollutants (referred to as ''10/25 tpy''). In our technology review of the Marine Vessel MACT standards, we considered the use of add-on APCD for marine vessel loading operations with HAP emissions less than 10/25 tpy. We also evaluated the costs for lean oil absorption systems as add-on APCD under the Marine Vessel MACT technology review. Depending on the throughput of the vessel, costs ranged from $77,000 per ton HAP removed for barges to $510,000 per ton HAP removed for ships ($3,900 per ton VOC removed to $25,000 per ton VOC removed) (see *Cost Effectiveness and Impacts of Lean Oil Absorption for Control of Hazardous Air Pollutants from Gasoline Loading—Promulgation* in Docket Item Number EPA–HQ–OAR–2010–0600–0401). We consider requiring add-on APCD for these smaller marine vessel loading operations not to be cost effective.

As part of the technology review of 40 CFR part 63, subpart Y, we also considered requiring marine vessel loading operations with emissions less than 10/25 tpy and offshore operations to use submerged loading (also referred to as submerged filling). We did include this requirement in the Marine Vessel MACT. However, when we amended the Marine Vessel MACT, we specifically excluded marine vessel loading operations at petroleum refineries from these provisions, deferring the decisions to include this requirement until we performed the technology review for Refinery MACT 1. The submerged filling requirement in 40 CFR part 63, subpart Y cites the cargo filling line requirements developed by the Coast Guard in 46 CFR 153.282. We project that applying the submerged filling requirements to marine vessel loading operations at petroleum refineries will have no costs or actual emission reductions because marine vessels carrying bulk liquids, liquefied gases or compressed gas hazardous materials are already required by 46 CFR 153.282 to have compliant ''submerged fill'' cargo lines that also meet the requirements of the Marine Vessel MACT. While we do not anticipate that this requirement will affect actual emissions, it will lower the allowable emissions for these sources under Refinery MACT 1. Therefore, we are proposing, pursuant to CAA section 112(d)(6), to amend 40 CFR part 63, subpart Y to delete the exclusion for marine vessel loading operations at petroleum refineries, which would require small marine vessel loading operations (*i.e.,* operations with HAP emissions less than 10/25 tpy) and offshore marine vessel loading operations to use submerged filling based on the cargo filling line requirements in 46 CFR 153.282.

f. Cooling Towers/Heat Exchange Systems

Heat exchange systems include equipment necessary to cool heated non-contact cooling water prior to returning the cooling water to a heat exchanger or discharging the water to another process unit, waste management unit or to a receiving water body. Heat exchange systems are designed as closed-loop recirculation systems with cooling towers or once-through systems that do not recirculate the cooling water through a cooling tower. Heat exchangers in heat exchange systems are constructed with tubes designed to prevent contact between hot process fluids and cooling water. Heat exchangers occasionally develop leaks that allow process fluids to enter the cooling water. The volatile HAP and other volatile compounds in these process fluids are then emitted to the atmosphere due to stripping in a cooling tower or volatilization from a cooling water pond or receiving water body.

We established MACT standards for heat exchange systems at refineries in 2009 (see 74 FR 55686, October 28, 2009, as amended at 75 FR 37731, June 30, 2010). The EPA received a petition for reconsideration from the American Petroleum Institute (API) and granted reconsideration on certain issues. On June 20, 2013, we issued a final rule addressing the petition, clarifying rule provisions, and revising the monitoring provisions to provide additional flexibility (78 FR 37133). We are not aware of any developments in processes, practices or control technologies beyond those we recently considered in our analysis of emission reduction techniques for heat exchange systems, which can be found in the docket (Docket Item Number EPA–HQ–OAR–2003–0146–0229). Therefore, we are proposing that it is not necessary to revise Refinery MACT 1 requirements for heat exchange systems pursuant to CAA section 112(d)(6).

g. Wastewater Treatment

Wastewater collection includes components such as drains, manholes, trenches, junction boxes, sumps, lift stations and sewer lines. Wastewater treatment systems are divided into three categories: primary treatment operations, which include oil-water separators and equalization basins; secondary treatment systems, such as biological treatment units or steam strippers; and tertiary treatment systems, which further treat or filter wastewater prior to discharge to a receiving body of water or reuse in a process.

Refinery MACT 1 requires wastewater streams at a new or existing refinery to comply with 40 CFR 61.340 through 61.355 of the NESHAP for Benzene Waste Operations (BWON) in 40 CFR part 61, subpart FF. The BWON requires control of wastewater collection and treatment units for facilities with a total annual benzene quantity of greater than or equal to 10 megagrams per year (Mg/yr). Individual waste streams at refineries with a total annual benzene quantity greater than or equal to 10 Mg/yr are not required to adopt controls if the flow-weighted annual average benzene concentration is less than 10 parts per million by weight (ppmw) or the flow rate is less than 0.02 liters per minute at the point of generation. The BWON requires affected waste streams to comply with one of several options for controlling benzene emissions from waste management units and for treating the wastes containing benzene (55 FR 8346, March 7, 1990; 58 FR 3095, January 7, 1993).

Although the BWON specifically regulates benzene only, benzene is considered a surrogate for organic HAP from wastewater treatment systems at petroleum refineries. Benzene is present in nearly all refinery process streams. It is an excellent surrogate for wastewater pollutants because its unique chemical properties cause it to partition into the wastewater more readily than most other organic chemicals present at petroleum refineries. We stated our rationale regarding the use of benzene as a surrogate for refinery HAP emissions from wastewater in the original preamble to Refinery MACT 1 (59 FR 36133, July 15, 1994).

We performed a technology review for wastewater treatment systems to identify different control technologies for reducing emissions from wastewater treatment systems. We also reviewed the current standards for wastewater treatment systems in different rules

including the HON, the proposed NSPS for wastewater systems at petroleum refineries, and the BWON (See *Technology Review for Industrial Wastewater Collection and Treatment Operations at Petroleum Refineries,* in Docket ID Number EPA–HQ–OAR–2010–0682.) We identified several developments in processes, practices and control technologies for wastewater treatment, and evaluated the cost and cost effectiveness of each of those developments: (1) requiring wastewater drain and tank controls at refineries with a total annual benzene (TAB) quantity of less than 10 Mg/yr; (2) requiring specific performance parameters for an enhanced biological unit (EBU) beyond those required in the BWON; and (3) requiring wastewater streams with a VOC content of 750 ppmv or higher to be treated by steam-stripping prior to any other treatment process for facilities with high organic loading rates (*i.e.,* facilities with total annualized benzene quantity of 10 Mg/yr or more). These options are, for the most part, independent of each other, so the costs and cost effectiveness of each option are considered separately.

Option 1 was evaluated because refineries with a total annual benzene quantity of less than 10 Mg/yr are not required to install additional controls on their wastewater treatment system. Thus, these refineries are limiting the amount of benzene produced in wastewater streams to less than 10 Mg/yr, which effectively limits their benzene emissions from wastewater to less than 10 Mg/yr.

Option 2 is intended to improve the performance of wastewater treatment systems that use an EBU, and thereby achieve additional emission reductions. The BWON, as it applies under Refinery MACT 1, has limited operational requirements for an EBU. Available data suggest that these systems are generally effective for degrading benzene and other organic HAP; however, without specific performance or operational requirements, the effectiveness of the EBU to reduce emissions can be highly variable. Under option 2, more stringent operating requirements are considered for the EBU at refineries.

Option 3 considers segregated treatment of wastewater streams with a volatile organic content of greater than 750 ppmw, or high-strength wastewater streams, directly in a steam stripper (*i.e.,* not allowing these streams to be mixed and treated in the EBU). Preliminary investigations revealed direct treatment of wastewater by steam-stripping is only cost effective for high-strength wastewater streams of sufficient quantities. For more detail regarding the impact analysis for these control options, see *Technology Review for Industrial Wastewater Collection and Treatment Operations at Petroleum Refineries,* in Docket ID Number EPA–HQ–OAR–2010–0682.

Table 8 provides the nationwide impacts for the control options. Based on the costs and emission reductions for each of the options, we consider none of the options identified to be cost effective for reducing emissions from petroleum refinery wastewater treatment systems. We are proposing that it is not necessary to revise Refinery MACT 1 to require additional controls for wastewater treatment systems pursuant to CAA section 112(d)(6).

TABLE 8—NATIONWIDE EMISSIONS REDUCTION AND COST IMPACTS OF CONTROL OPTIONS CONSIDERED FOR WASTEWATER TREATMENT SYSTEMS AT PETROLEUM REFINERIES

Control option	Capital cost (million $)	Annualized costs (million $/yr)	Emissions reduction, VOC (tpy)	Emissions reduction, HAP (tpy)	Cost effectiveness ($/ton VOC)	Cost effectiveness ($/ton HAP)
1	19.7	4.2	592	158	7,100	26,600
2	223	28.6	2,060	549	13,900	52,100
3	142	50.7	3,480	929	14,500	54,500

h. Fugitive Emissions

The EPA recognizes that, in many cases, it is impractical to directly measure emissions from fugitive emission sources at refineries. Direct measurement of fugitive emissions from sources such as wastewater collection and treatment operations, equipment leaks and storage vessels can be costly and difficult, especially if required to be deployed on all sources of fugitives within a refinery and certainly on a national scale. This is a major reason why fugitive emissions associated with refinery processes are generally estimated using factors and correlations rather than by direct measurement. For example, equipment leak emissions are estimated using factors and correlations between leak rates and concentrations from EPA Method 21 instrument monitoring. Fugitive emissions from wastewater collection and treatment are estimated based on process data, material balances and empirical correlations. Relying on these kinds of approaches introduces uncertainty into the emissions inventory for fugitive emission sources.

For each of the individual fugitive emission points, we evaluated developments in processes, practices and control technologies for measuring and controlling fugitive emissions from these sources. For storage vessels, as discussed in section IV.B.1.b of this preamble, we are proposing to lower the size and vapor pressure threshold and to require additional fittings on tanks, similar to requirements for tanks in the chemical industry because we project a cost savings due to recovered product. However, we considered but are not proposing to require EPA Method 21 of 40 CFR part 60, Appendix A–7 or optical gas imaging monitoring to identify fugitive emissions from each individual storage vessel. For equipment leaks, as discussed in section IV.B.1.c of this preamble, we considered lowering the leak definition for equipment at petroleum refineries from the current Refinery MACT 1 level of 10,000 ppm for pumps and valves down to the 500 ppm definition that is used in all the other MACT standards applying to the chemical industry, as well as adding a requirement for connectors to be included in the LDAR program because we consider these more stringent LDAR requirements to be technically feasible for the petroleum refining industry. Nevertheless, we rejected these options under the technology review as not being cost effective, based on costs projected by using the industry-reported emissions inventories. We are, however, proposing to adopt the use of optical gas imaging devices following 40 CFR part 60, Appendix K as an alternative to using EPA Method 21, which will be an alternative available to petroleum refiners that could offer cost savings, once the monitoring protocol set forth in Appendix K is promulgated. For wastewater treatment systems, as discussed in section IV.B.1.g of this

preamble, we considered both lowering the threshold for refinery wastewater streams requiring control, as well as requiring refineries to comply with enhanced monitoring and operating limits for EBU, such as the requirements contained in most of the chemical sector MACT standards, because we consider these requirements to be technically feasible for the refining industry. However, like equipment leaks, we are rejecting further controls for wastewater because using the industry-reported emissions inventory, we determined that further wastewater requirements are not cost effective.

Although we are not proposing to require a number of additional control options for fugitive emission sources because we determined them not cost effective, we remain concerned regarding the potential for high emissions from these fugitive sources due to the difficulties in monitoring actual emission levels. For example, the regulations require infrequent monitoring of storage tank floating roof seals (visual inspections are required annually and direct inspections of primary seals are required only when the vessel is emptied and degassed, or no less frequently than once every 5 years for internal floating roofs or 10 years for external floating roofs with secondary seals). Given these inspection frequencies, tears or failures in floating roof seals may exist for years prior to being noticed, resulting in much higher emissions than expected or estimated for these sources in the emissions inventory. Similarly, water seals, which are commonly used to control emissions from wastewater collection drain systems, may be difficult to monitor (*e.g.,* some are underground so visible emissions tests cannot be performed) and are subject only to infrequent inspections. During hot, dry months, these water seals may dry out, leaving an open pathway of vapors to escape from the collection system to the atmosphere. Significant emission releases may occur from these ''dry'' drains, which could persist for long periods of time prior to the next required inspection.

Because the requirements and decisions that we are proposing in this action are based upon the emissions inventory reported by facilities in response to the 2011 Refinery ICR, and considering the uncertainty with estimating emissions from fugitive emission sources, we believe that it is appropriate under CAA section 112(d)(6) to require refiners to monitor, and if necessary, take corrective action to minimize fugitive emissions, to ensure that facilities appropriately manage emissions of HAP from fugitive sources. In other words, in this action, we are proposing a HAP concentration to be monitored in the ambient air around a refinery, that if exceeded, would trigger corrective action to minimize fugitive emissions. The fenceline concentration action level would be set at a level such that no facility in the category would need to undertake additional corrective measures if the facility's estimate of emissions from fugitive emissions is consistent with the level of fugitive emissions actually emitted. On the other hand, if a facility's estimate of fugitive HAP emissions was not accurate, the owner or operator may need to take some corrective action to minimize fugitive emissions. This approach would provide the owner or operator with the flexibility to determine how best to reduce HAP emissions to ensure levels remain below the fenceline concentration action level. The details of this proposed approach are set forth in more detail in the following discussions in this preamble section.

In light of the impracticality of directly monitoring many of these fugitive emission sources on a regular basis, which would help ensure these fugitive sources are properly functioning to the extent practical, we evaluated a fenceline monitoring program under CAA section 112(d)(6). In this section, we evaluate the developments in processes, practices and control technologies for measuring and controlling fugitive emissions from the petroleum refinery as a whole through fenceline monitoring techniques. Fenceline monitoring will identify a significant increase in emissions in a timely manner (*e.g.,* a large equipment leak or a significant tear in a storage vessel seal), which would allow corrective action measures to occur more rapidly than it would if a source relied solely on the traditional infrequent monitoring and inspection methods. Small increases in emissions are not likely to impact the fenceline concentration, so a fenceline monitoring approach will generally target larger emission sources that have the most impact on the ambient pollutant concentration near the refinery.

Historically, improved information through measurement data has often led to emission reductions. However, without a specific emission limitation, there may be no incentive for owners or operators to act on the additional information. Therefore, as part of the fenceline monitoring approach, we seek to develop a not-to-be exceeded annual fenceline concentration, above which refinery owners or operators would be required to implement corrective action to reduce their fenceline concentration. We sought to develop a maximum fenceline concentration action level that is consistent with the emissions projected from fugitive sources compliant with the provisions of the refinery MACT standards as modified by the additional controls proposed in this action (*e.g.,* additional fittings on storage vessels).

This section details our technology review to identify developments in processes, practices and technologies for measuring air toxics at the fenceline of a facility. Upon selection of a specific fenceline monitoring method, we provide our rationale for the specific details regarding the fenceline monitoring approach, including requirements for siting the monitors, procedures for adjusting for background interferences, selection of the fenceline action level, and requirements for corrective action.

Developments in monitoring technology and practices. The EPA reviewed the available literature and identified several different methods for measuring fugitive emissions around a petroleum refinery. These methods include: (1) Passive diffusive tube monitoring networks; (2) active monitoring station networks; (3) ultraviolet differential optical absorption spectroscopy (UV–DOAS) fenceline monitoring; (4) open-path Fourier transform infrared spectroscopy (FTIR); (5) DIAL monitoring; and (6) solar occultation flux monitoring. We considered these monitoring methods as developments in practices under CAA section 112(d)(6) for purposes of all fugitive emission sources at petroleum refineries. Each of these methods has its own strengths and weaknesses, which are discussed in the following paragraphs.

Fenceline passive diffusive tube monitoring networks employ a series of diffusive tube samplers at set intervals along the fenceline to measure a time-integrated ambient air concentration at each sampling location. A diffusive tube sampler consists of a small tube filled with an adsorbent, selected based on the pollutant(s) of interest, and capped with a specially designed cover with small holes that allow ambient air to diffuse into the tube at a small, fixed rate. Diffusive tube samplers have been demonstrated to be a cost-effective, accurate technique for measuring ambient concentrations of pollutants resulting from fugitive emissions in a number of studies.[29] [30] In addition,

[29] McKay, J., M. Molyneux, G. Pizzella, V. Radojcic. *Environmental Levels of Benzene at the*

diffusive samplers are used in the European Union to monitor and maintain air quality, as described in European Union directives 2008/50/EC and Measurement Standard EN 14662–4:2005 for benzene. The International Organization for Standardization developed a standard method for diffusive sampling (ISO/FDIS 16017–2).

In 2009, the EPA conducted a year-long fenceline monitoring pilot project at Flint Hills West Refinery in Corpus Christi, Texas, to evaluate the viability and performance of passive diffusive sampling technology. Overall, we found the technology to be capable of providing cost effective, high spatial-density long-term monitoring. This approach was found to be relatively robust and implementable by modestly trained personnel and provided useful information on overall concentration levels and source identification using simple upwind and downwind comparisons.[31] Combined with on-site meteorological measurements, 2-week time-integrated passive monitoring has been shown to provide useful facility emission diagnostics.

There are several drawbacks of time-integrated sampling, including the lack of immediate feedback on the acquired data and the loss of short-term temporal information. Additionally, time-integrated monitoring usually requires the collected sample to be transported to another location for analysis, leading to possible sample integrity problems (*e.g.,* sample deterioration, loss of analytes, and contamination from the surrounding environment). However, time-integrated monitoring systems are generally lower-cost and require less labor than time-resolved monitoring systems. Furthermore, while passive diffusive tube monitoring employs time-integrated sampling, these time-integrated samples still represent much shorter time intervals (2 weeks) than many of the current source-specific monitoring and inspection requirements (annually or less frequently). Consequently, passive diffusive tube monitoring still allows earlier detection of significant fugitive emissions than conventional source-specific monitoring.

Active monitoring station networks are similar to passive diffusive tube monitoring networks in that a series of discrete sampling sites are established; however, each sampling location uses a pump to actively draw ambient air at a known rate through an adsorption tube. Because of the higher sampling rate, adsorption tubes can be analyzed on a daily basis, providing additional time resolution compared to diffusive tube sampling systems. Alternatively, the active sampling system can directly feed an analyzer for even more time resolution. However, this direct analysis of ambient air generally has higher detection limits than when the organic vapors are collected and concentrated on an adsorption matrix prior to analysis. Active monitoring stations have been used for a variety of pollutants in a variety of settings and the methods are well-established. However, compared to the passive diffusive tube monitoring stations, the sampling system is more expensive, more labor-intensive, and generally requires highly-trained staff to operate.

UV–DOAS fenceline monitoring is an ''open-path'' technology. An electromagnetic energy source is used to emit a beam of electromagnetic energy (ultraviolet radiation) into the air towards a detection system some distance from the energy source (typically 100 to 500 meters). The electromagnetic energy beam interacts with components in the air in the open path between the energy source and the detector. The detector measures the disruptions in the energy beam to determine an average pollutant concentration across the open path length. Because the UV–DOAS system can monitor integrated concentrations over a fairly long path-length, fewer monitoring ''stations'' (energy source/detector systems) would be needed to measure the ambient concentration around an entire refinery. However, each UV–DOAS monitoring system is more expensive than an active or passive monitoring station and generally requires significant instrumentation shelter to protect the energy source and analyzer when used for long-term (ongoing) measurements. Advantages of UV–DOAS systems include providing real-time measurement data with detection limits in the low parts per billion range for certain compounds. Fog or other visibility issues (*e.g.,* dust storm, high pollen, wildfire smoke) will interfere with the measurements. UV–DOAS systems have been used for fenceline monitoring at several U.S. petroleum refineries and petrochemical plants. UV–DOAS monitoring systems are specifically included as one of the measurement techniques suitable under EPA's Other Test Method 10 (OTM–10).[32]

Open-path FTIR is similar to UV–DOAS monitoring except that an infrared light source and detector system are used. Like the UV–DOAS monitoring approach, the open-path FTIR monitoring system will measure the average pollutant concentration across the open path length between the infrared source and detector. Path lengths and equipment costs for an open-path FTIR system are similar to those for a UV–DOAS system, and the open-path FTIR system provides real-time measurement data. The open-path FTIR system has spectral interferences with water vapor, CO and CO_2, which can impact the lower detection limit for organic vapors. Open-path FTIR fenceline monitoring has also been used to measure ambient air concentrations around several petroleum refineries and petrochemical plants. Open-path FTIR is specifically included as a measurement technique in EPA's OTM–10. Although open-path FTIR can be used to measure a larger number of compounds than UV–DOAS, the detection limit of open-path FTIR for benzene is higher than for UV–DOAS, as noted in OTM–10. In other words, open-path FTIR is not as sensitive to benzene levels as is UV–DOAS. As benzene is an important pollutant from fugitive sources at petroleum refineries and can often be used as a surrogate for other organic HAP emissions, this high detection limit for benzene is a significant disadvantage. Thus, for the purposes of measuring organic HAP from fugitive sources at the fenceline of a petroleum refinery, a UV–DOAS monitoring system is expected to be more sensitive than an open-path FTIR system. As the cost and operation of open-path FTIR and UV–DOAS systems are very comparable, the benzene detection limit issue is a significant differentiator between these two methods when considering fenceline monitoring to measure fugitives around a petroleum refinery.

DIAL monitoring systems employ a pulsed laser beam across the measurement path. Small portions of the light are backscattered due to particles and aerosols in the measurement path. This backscattered light is collected through a telescope system adjacent to the laser and measured via a sensitive light detector. The timing of the received light provides a measure of the distance of

Boundaries of Three European Refineries, prepared by the CONCAWE Air Quality Management Group's Special Task Force on Benzene Monitoring at Refinery Fenceline (AQ/STF–45), Brussels, June 1999.

[30] Thoma, E.D., M.C. Miller, K.C. Chung, N.L. Parsons, B.C. Shine. 2011. *Facility Fenceline Monitoring using Passive Sampling,* J. Air & Waste Manage Assoc. 61: 834–842.

[31] Thoma, et al., 2011.

[32] ''Optical Remote Sensing for Emission Characterization from Non-Point Sources.'' Final ORS Protocol, June 14, 2006. Available at: *http://www.epa.gov/ttn/emc/prelim/otm10.pdf.*

the emission plume. Two different wavelengths of light are pulsed in quick succession: one wavelength that is absorbed strongly by the pollutant of interest and one that is not absorbed. The difference in the returned signal strength between these two light pulses provides a measure of the concentration of the pollutant. Thus, a unique advantage of the DIAL monitoring system is that it can provide spatially resolved pollutant concentrations in two dimensions. Measurements can be made in a relatively short period of time, so the method also provides good time resolution.

The DIAL monitoring system has been used in a variety of studies to measure emissions from petroleum refinery and petrochemical sources. It is typically used for specific, shorter-term studies (one to several weeks in duration). The equipment is expensive, has limited availability in the U.S., and requires highly trained professionals to operate. Although DIAL monitoring is included as an appropriate method for EPA's OTM–10, there are no known long-term applications of this technology for the purpose of fenceline monitoring. Given the limited availability of the equipment and qualified personnel to operate the equipment, we do not consider DIAL monitoring to be technically feasible for the purposes of ongoing, long-term fenceline monitoring.

The last fenceline monitoring method evaluated was solar occultation flux. Solar occultation flux uses the sun as the light source and uses an FTIR or UV detector to measure the average pollutant concentration across the measurement path. In this case, the measurement path is vertical. In order to measure the concentrations around an industrial source, the measurement device is installed in a specially equipped van, which is slowly driven along the perimeter of the facility. Measurement signal strength and a global positioning system (GPS) enables determination of pollutant concentrations along the perimeter of the site. This method provides more spatial resolution of the emissions than the UV–DOAS or open-path FTIR methods and is less expensive than a DIAL system. It has the advantage that only one monitoring system is needed per facility, assuming a mobile device is used. Disadvantages of this method include the need of full-time personnel to drive the equipment around the perimeter of the facility (or the need to buy a detector for each measurement location around the perimeter of the facility, if set locations are used), potential accessibility issues for some fenceline locations (*e.g.,* no road near the fenceline), and the measurement method cannot be used at night or during cloudy periods. It would be possible to purchase numerous detection devices and establish fixed monitoring stations similar to the passive or active monitoring approaches described earlier, but this would be very expensive. Furthermore, any application of solar occultation flux is dependent on the sun, so this approach would mean significant periods each calendar day when the monitoring system would not be able to provide data. Based on our evaluation of this technology, we determined that this method is not a reasonable approach for monitoring fenceline concentrations of pollutants around a petroleum refinery on a long-term, ongoing basis. We are soliciting comment on the application of alternative monitoring techniques previously discussed for purposes of fenceline monitoring at refineries.

Costs associated with fenceline monitoring alternatives. Based on our review of available monitoring methods, we determined that the following monitoring methods were technically feasible and appropriate for monitoring organic HAP from fugitive emission sources at the fenceline of a petroleum refinery on a long-term basis: (1) Passive diffusive tube monitoring networks; (2) active monitoring station networks; (3) UV–DOAS fenceline monitoring; and (4) open-path FTIR. While DIAL monitoring and solar occultation flux monitoring can be used for short-term studies, we determined that these methods were not appropriate for continuous monitoring at petroleum refineries. This section evaluates the costs of these technically feasible monitoring methods. As noted previously, the cost identified for the open-path monitoring methods (UV–DOAS and FTIR) are very similar. Therefore, we developed costs for only the UV–DOAS system because this method provides lower detection limits for pollutants of interest (specifically, benzene).

Costs for the fenceline monitoring methods are dependent on the sampling frequency (for passive and active monitoring locations) and the number of monitoring locations needed based on the size and geometry of the facility. For the open-path methods, we estimated that four monitoring systems (along the east, west, north and south fencelines) would be needed, regardless of the size of the refinery. Some fencelines at larger refineries may be too long for a single open path length, but we did not vary the number of detectors needed for the open-path systems based on refinery size in order to provide a reasonable lower-cost estimate for the open-path monitoring option. For small petroleum refineries (less than 750 acres), we estimated 12 passive or active monitoring stations would be sufficient. For medium-sized refineries (750 to 1,500 acres), we estimated 18 monitoring stations would be required; for large refineries (greater than 1,500 acres), we estimated that 24 monitoring stations would be needed. For the passive diffusive tube monitoring we assumed a 2-week sampling interval; for active monitoring stations, we assumed a daily sampling frequency.

We estimated the first year installation and equipment costs for the passive tube monitoring system could cost up to $100,000 for larger refineries (*i.e.,* 24 sampling locations). Annualized costs for ongoing monitoring are projected to be approximately $40,000 per year, assuming the ongoing sample analyses are performed in-house. Capital costs for active sampling systems were estimated to be approximately twice that of the passive system for the larger refinery. Ongoing costs were more than 10 times higher, however, due to the daily sampling frequency. Equipment costs for a single UV–DOAS system were estimated to be about $100,000, so a complete fenceline monitoring system (four systems plus shelters) was estimated to cost more than $500,000. A refinery using this technology for two fenceline locations estimated the annualized cost of calibrating and maintaining these systems approaches $1-million per year. (See *Fenceline Monitoring Technical Support Document,* in Docket ID Number EPA–HQ–OAR–2010–0682).

Table 9 provides the nationwide costs of the monitoring approaches as applied to all U.S. petroleum refineries.

TABLE 9—NATIONWIDE COST IMPACTS OF FENCELINE MONITORING OPTIONS AT PETROLEUM REFINERIES

Monitoring option	Monitoring option description	Capital cost (million $)	Annual operating costs (million $/yr)	Total annualized costs (million $/yr)
1	Passive diffusive tube monitoring network	12.2	3.83	5.58
2	Active sampling monitoring network	20.6	30.2	33.1
3	Open-path monitoring (UV–DOAS, FTIR)	71.0	35.5	45.6

The primary goal of a fenceline monitoring network is to ensure that owners and operators properly monitor and manage fugitive HAP emissions. As explained further in this preamble section, we are proposing a concentration action level that was derived by modeling fenceline benzene concentrations (as a surrogate for HAP) at each facility after full compliance with the refinery MACT standards, as amended by this proposed action. As such, we are proposing a fenceline benzene concentration that all facilities in the category can meet, according to the emissions inventories reported in response to the 2011 Refinery ICR. Therefore, we do not project a HAP emission reduction that the fenceline monitoring network will achieve. However, if an owner or operator has underestimated the fugitive emissions from one or more sources, or if a leak develops or a tank seal or fitting fails, a fenceline monitoring system would provide for identification of such leaks much earlier than current monitoring requirements and, where emissions are beyond those projected from implementation of the MACT standards, would help ensure that such emissions are quickly addressed. We note that any costs for a fugitive monitoring system would be offset, to some extent, by product recovery since addressing these leaks more quickly than would otherwise occur based on the more infrequent monitoring required would reduce product losses.

Based on the low cost and relative benefits of passive monitoring, which include the ability to generate time-integrated concentration measurements at low detection limits, coupled with relative ease of deployment and analysis, the EPA is proposing to require refineries to deploy passive time-integrated samplers at the fenceline. These samplers would monitor the level of fugitive emissions that reach the fenceline from all fugitive emission sources at the facility. The EPA is proposing to require fugitive emission reductions if fenceline concentrations exceed a specified concentration action level, as described further below. These proposed fenceline monitoring requirements complement the EPA's proposal to allow the use of the optical gas imaging camera as described in Appendix K of 40 CFR part 60 as an alternative work practice for measuring emissions from equipment leaks, in lieu of monitoring with EPA Method 21 of 40 CFR part 60, Appendix A–7 (see section IV.B.1.c of this preamble for further discussion). Both approaches utilize low-cost methods to help ensure that total fugitives from a facility are adequately controlled.

Because there is no current EPA test method for passive diffusive tube monitoring, as part of this action we are proposing specific monitor citing and sample collection requirements as EPA Method 325A of 40 CFR part 63, Appendix A, and specific methods for analyzing the sorbent tube samples as EPA Method 325B of 40 CFR part 63, Appendix A. We are proposing to establish an ambient concentration of benzene at the fenceline that would trigger required corrective action. A brief summary of the proposed fenceline sampling requirements and our rationale for selecting the corrective action concentration levels are provided below.

Siting, design and sampling requirements for fenceline monitors. The EPA is proposing that passive fenceline monitors collecting 2-week time-integrated samples be deployed to measure fenceline concentrations at refineries. We are proposing that refineries deploy passive samplers at 12 to 24 points circling the refinery perimeter. A primary requirement for a fenceline monitoring system is that it provides adequate spatial coverage for determination of representative pollutant concentrations at the boundary of the facility or operation. In an ideal scenario, fenceline monitors would be placed so that any fugitive plume originating within the facility would have a high probability of intersecting one or more monitors, regardless of wind direction. This proposed monitoring program would require that monitors be placed at 15 to 30 degree intervals along the perimeter of the refinery, depending on the size of the facility. For small refineries (less than 750 acres), monitors should be placed at 30 degree intervals, for a total of 12 locations; for facilities that are larger than 750 acres and less than 1,500 acres, monitors should be placed at 20 degree intervals, at 18 locations; and for facilities greater than 1,500 acres, monitors should be placed at 15 degree intervals, accounting for 24 locations. We have also established an alternative siting procedure where monitors can be placed every 2,000 feet along the fenceline of the refinery, which may be easier to implement, especially for irregularly-shaped facilities. In proposing these requirements for the number and location of required monitors, the EPA assumes that all portions of the facility are contiguous such that it is possible to define a single facility boundary or perimeter, although this perimeter may be irregular in shape. We request comment on how these monitoring requirements should be adapted for instances where one or more portions of the facility are not contiguous, and on the number and location of facilities for which special fenceline monitoring requirements to accommodate non-contiguous operations might apply.

We are proposing that the highest concentration of benzene, as an annual rolling average measured at any individual monitor and adjusted for background (see below), would be compared against the concentration action level in order to determine if there are significant excess emissions of fugitive emissions that need to be addressed. Existing sources would be required to deploy samplers no later than 3 years after the effective date of the final rule; new sources would be required to deploy samplers by the effective date of the final rule or startup, whichever is later. Because the proposed concentration action level is composed of 1 year's worth of data, we are proposing that refinery owners and operators would be required to demonstrate compliance with the concentration action level for the first time 1 year following the compliance date, and thereafter on a 1-year rolling annual average basis (*i.e.,* considering results from the most recent 26 consecutive 2-week sampling intervals and recalculating the average every 2 weeks).

Benzene as an appropriate target analyte. Passive diffusive tube monitors can be used to determine the ambient concentration of a large number of compounds. However, different sorbent materials are typically needed to collect compounds with significantly different properties. Rather than require multiple tubes per monitoring location and require a full analytical array of compounds to be determined, which would significantly increase the cost of the proposed fenceline monitoring program, we are proposing that the fenceline monitors be analyzed specifically for benzene. Refinery owners or operators may elect to do more detailed speciation of the emissions, which could help identify the process unit that may be contributing to a high fenceline concentration, but we are only establishing monitoring requirements and action level requirements for benzene. We consider benzene to be an excellent surrogate for organic HAP from fugitive sources for multiple reasons. First, benzene is ubiquitous at refineries, and is present in nearly all refinery process streams such that leaking components generally will leak benzene at some level (in addition to other compounds). Benzene is also present in crude oil and gasoline, so most storage tank emissions include benzene. As described previously in our discussion of wastewater treatment systems, benzene is also a very good surrogate for organic HAP emissions from wastewater and is already considered a surrogate for organic HAP emissions in the wastewater treatment system control requirements in Refinery MACT 1. Second, the primary releases of benzene occur at ground level as fugitive emissions from process equipment, storage vessels and wastewater collection and treatment systems, and the highest ambient benzene concentrations outside the facility will likely occur near the property boundary near ground level, so fugitive releases of benzene will be effectively detected at the ground-level monitoring sites. According to the emissions inventory we have relied on for this proposed action, 85 percent of benzene emissions from refineries result from ground-level fugitive emissions from equipment and wastewater collection and treatment (see the Component 2 database contained in Docket ID Number EPA–HQ–OAR–2010–0682). Finally, benzene is present in nearly all process streams. Therefore, the presence of benzene at the fenceline is also an indicator of other air toxics emitted from fugitive sources at refineries.

For the reasons discussed above, we believe that benzene is the most appropriate pollutant to monitor. We believe that other compounds, such as PAH or naphthalene, would be less suitable indicators of total fugitive HAP for a couple of reasons. First, they are prevalent in stack emissions as well as fugitive emissions, so there is more potential for fenceline monitors to pick up contributions from non-fugitive sources. In contrast, almost all benzene comes from fugitive sources, so monitoring for benzene increases our confidence that the concentration detected at the fenceline is from fugitives. Second, as compared to benzene, these other compounds are expected to be present at lower concentrations and, therefore, would be more difficult to measure accurately using fenceline monitoring. We request comments on the suitability of selecting benzene or other HAP, including PAH or naphthalene, as the indicator to be monitored by fenceline samplers. We also request comment on whether it would be appropriate to require multiple HAP to be monitored at the fenceline considering the capital and annual cost for additional monitors, and if so, which pollutants should be monitored.

Adjusting for background benzene concentrations. Under this proposed approach, absolute measurements along a facility fenceline cannot completely characterize which emissions are associated with the refinery and which are associated with other background sources. The EPA recognizes that sources outside the refinery boundaries may influence benzene levels monitored at the fenceline. Furthermore, background levels driven by local upwind sources are spatially variable. Both of these factors could result in inaccurate estimates of the actual contribution of fugitive emissions from the facility itself to the concentration measured at the fenceline. Many refineries and petrochemical industries are found side-by-side along waterways or transport corridors. With this spatial positioning, there is a possibility that the local upwind neighbors of a facility could cause different background levels on different sides of the facility. To account for background concentrations (*i.e.,* to remove the influence of benzene emissions from sources outside the refinery on monitored fenceline values), we are proposing to adjust monitored fenceline values to account for background concentrations as described below. We solicit comments on alternative approaches for making these adjustments for background benzene.

Fenceline-deployed passive samplers measure concentrations that originate from both the observed facility and from off-site sources. The relative contribution of the facility versus off-site source(s) to the measured concentration depends on the emission levels of the observed facility and off-site sources (including both near-field and remote sources), transporting wind direction and atmospheric dispersion. The ability to identify facility and off-site source contributions is reliant on the measurement scheme selected. The most basic (and lowest cost) approach involves different calculations using 2-week deployed samplers located only at the facility fenceline. Greater discrimination capability is found by adding passive samplers to specific areas of the facility, reducing the time duration of the passive samplers, and coupling measured meteorology information to the passive sampler analysis. Selective use of time-resolved monitoring or wind sector sampling approaches provides the highest source and background discrimination capability. The approach we are proposing seeks to remove off-site source contributions to the measured fenceline concentrations to the greatest extent possible using the most cost-effective measurement solutions.

The highest fenceline concentration (HFC) for each 2-week sampling period can be expressed as:

$$HFC = Maximum \times (MFC - OSC^{i})$$

Where:

HFC = highest fenceline concentration, corrected for background.

MFC_i = measured fenceline concentration for the sampling period at monitoring location i.

OSC_i = estimated off-site source contribution for the sampling period at monitoring location i.

The off-site source contribution (OSC) consists of two primary components: (1) A slowly varying, spatially uniform background (UB) concentration and, in some cases, (2) potential near-field interfering sources.

$$OSC_i = UB + NFS_i$$

Where:

UB = uniform background concentration.

NFS_i = near-field interfering source concentration contribution at monitoring location i.

In some deployment scenarios (such as spatially isolated facilities), the major off-site source component can be identified as background concentrations that are uniform across the facility fenceline and neighboring area. In this

scenario, a UB concentration level can be determined and subtracted from the measured fenceline concentrations for each sampling period. This can be accomplished through use of facility-measured or otherwise available, quality assured time-resolved (or wind sector-resolved) background monitoring data, or from placement of additional passive samplers at upwind locations away from the facility fenceline and other sources.

In other scenarios, such as where other industrial sources or a highway are located nearby, background concentrations are likely not uniform. These outside sources would influence some, but not perhaps not all, fenceline monitors and, therefore, the true ''background'' concentration would vary, depending where on the fenceline the measurement was taken. In this case, background is not uniform, and monitoring location-specific near-field interfering source (NFS) values would need to be determined.

Due to the difficulties associated with determining location-specific NFS values, we are proposing to approximate OSC by using the lowest measured concentration (LMC) at the facility fenceline for that period. In this case, the HFC for the monitoring period, corrected for background, would be calculated as:

$$HFC \approx \Delta C = HMC - LMC$$

Where:

ΔC = concentration difference between the highest and lowest measured concentrations for the sampling period.
HMC = highest measured fenceline concentration for the sampling period.
LMC = lowest measured fenceline concentration for the sampling period.

This alternative is directly applicable for all refinery locations and requires no additional, off-site, upwind monitors, the placement of which is impossible to prescribe *a priori*. Use of LMC provides a reasonable proxy for OSC in most cases, but can over- or underestimate OSC in some cases. In locations where there are few upwind source contributions and where wind direction is relatively consistent, upwind passive samples on the fenceline can provide a realistic approximation of the actual off-site background levels. As the meteorology becomes more complicated (*e.g.,* mixed wind directions, higher percentage of calm winds), the LMC will reflect a progressively larger amount of emissions from the facility itself, so differential calculations may underestimate the true HFC for some monitoring periods (by inadvertently allowing some facility emissions to be subtracted as part of ''background''). On the other hand, if a near-field source impacts the highest measured concentration monitoring location significantly, but contributes little to the monitoring location with the LMC, the LMC differential calculation (*i.e.,* ΔC) could lead to an artificially elevated assessment of the highest fenceline concentration, corrected for background.

Based on our examination of previous fenceline monitoring results, we expect that the use of the LMC differential will provide an accurate method by which to determine HFC. Therefore, we are not proposing to limit the use of the LMC differential calculation in cases where there are no near-field sources and where mixed wind direction (or calm wind) is common. In these special cases, use of the UB concentration alone (no NFS term) may be more accurate than using LMC. We are seeking comment on how to identify conditions under which the LMC differential may underestimate the highest fenceline concentration, corrected for background, and the need to require facilities to determine and use UB rather than LMC in these cases.

We also recognize that under different site-specific conditions, the NFS contribution may affect certain fenceline monitoring stations more than others, causing the LMC differential calculation to overestimate the facility's contribution to the highest fenceline concentration. Therefore, we are also proposing to allow owners or operators of petroleum refineries to develop site-specific monitoring plans to determine UB and NFS_i.

If standard 2-week passive fenceline data and site analysis indicate potential near-field off-site source interferences at a section of the refinery, the proposal allows the owner or operator to conduct additional sampling strategies to determine a local background (OSC term) for use in the HFC calculation. The owner or operator would be required to report the basis for this correction, including analyses used to identify the sources and contribution of benzene concentration to the passive sampler concentration, within 45 days of the date the owner or operator first measures an exceedance of the concentration action level.

We envision that facilities would implement these additional strategies to refine fenceline concentration estimates only if appropriate given site-specific characteristics and only if HFC determined by the LMC approach is likely to exceed the concentration action level (see discussion below regarding this action level). Facilities with HFC below the concentration action level based on the simple LMC differential calculation would not be required to make any further demonstration of the influence of background sources on concentrations measured at the fenceline. For facilities where additional background adjustment is appropriate, optional strategies could include deployment of additional passive samplers at distances from the fenceline (toward and away from suspected NFS) and reducing the time intervals of passive deployments to increase time resolution and wind direction-comparison capability. In complex cases, such as two refineries sharing a common fenceline, wind-sector sampling or various forms of time-resolved monitoring may be required to ascertain the fenceline concentrations.

We are proposing that owners or operators of petroleum refineries electing to determine monitoring location-specific NFS concentrations must prepare and submit a site-specific monitoring plan. The monitoring plan is required to identify specific near-field sources, identify the location and type of monitors used to determine UB and NFS concentrations, identify the monitoring location(s) for which the NFS concentrations would apply, and delineate the calculations to be used to determine monitoring location specific NFS concentrations (for those monitoring locations impacted by the near-field source). We are proposing that the site-specific monitoring plan must be submitted to the Administrator for approval and receive approval prior to its use for determining HFC values.

The EPA requests comment on the most appropriate approach(es) for adjusting measured fenceline concentrations for background contributions, including (in complex cases) where meteorology is highly variable or where one or more near-field off-site sources affect the measured fenceline concentration (MFC) at a refinery. We are also seeking comment on the adequacy of the proposed requirements for developing and approving site-specific monitoring plans.

Concentration action level. As mentioned above, the EPA is proposing to require refineries to take corrective action to reduce fugitive emissions if monitored fenceline concentrations exceed a specific concentration action level on a rolling annual average basis (recalculated every two weeks). We selected this proposed fenceline action level by modeling fenceline benzene concentrations using the emissions inventories reported in response to the 2011 Refinery ICR, assuming that those reported emissions represented full compliance with all refinery MACT requirements, adjusted for additional control requirements we are proposing

in today's action. Thus, if the reported inventories are accurate, all facilities should be able to meet the fenceline concentration action level. We estimated the long-term ambient post-control benzene concentrations at each petroleum refinery using the post-control emission inventory and EPA's American Meteorological Society/EPA Regulatory Model dispersion modeling system (AERMOD). Concentrations were estimated by the model at a set of polar grid receptors centered on each facility, as well as surrounding census block centroid receptors extending from the facility outward to 50 km. For purposes of this modeling analysis, we assumed that the nearest off-site polar grid receptor was the best representation of each facility's fenceline concentration in the post-control case, unless there was a census block centroid nearer to the fenceline than the nearest off-site polar grid receptor or an actual receptor was identified from review of the site map. In those instances, we estimated the fenceline concentration as the concentration at the census block centroid. Only receptors (either the polar or census block) that were estimated to be outside the facility fenceline were considered in determining the maximum benzene level for each facility. We note that this analysis does not correlate to any particular metric related to risk. The maximum post-control benzene concentration modeled at the fenceline for any facility is 9 micrograms per cubic meter (μg/m^3) (annual average). (For further details of the analysis, see memo entitled *Fenceline Ambient Benzene Concentrations Surrounding Petroleum Refineries* in Docket ID Number EPA–HQ–OAR–2010–0682.)

The facility inventories generally project emissions with the required fugitive controls working as designed (*e.g.,* no tears in seals for storage vessel floating roofs and water in all water drain seals). If facility inventories are correct, annual average benzene concentrations would not exceed 9 μg/m^3 at the fenceline of any facility. Because the modeling approach considers only the emissions from the refinery, with no contribution from background or near-field sources, this concentration is comparable to the highest modeled fenceline concentration after correcting for background concentrations, as described previously. The EPA is proposing to set the standard at this concentration action level. We also note that this modeling effort evaluated the annual average benzene concentration at the fenceline, so that this action level applies to the annual average fenceline concentration measured at the facility.

The EPA recognizes that, because it is difficult to directly measure emissions from fugitive sources, there is significant uncertainty in current emissions inventories for fugitives. Thus, there is the potential for benzene concentrations monitored at the fenceline to exceed modeled concentrations. However, given the absence of fenceline monitors at most facilities, there is very limited information available at present about fenceline concentrations and the extent to which they may exceed concentrations modeled from inventories. In the absence of additional data regarding the concentration of fugitive emissions of benzene at the fenceline, the EPA believes it is reasonable to rely on the maximum modeled fenceline value as the concentration action level. We are soliciting comment on alternative concentration action levels and other approaches for establishing the concentration action level.

Due to differences in short-term meteorological conditions, short-term (*i.e.,* two-week average) concentrations at the fenceline can vary greatly. Given the high variability in short-term fenceline concentrations and the difficulties and uncertainties associated with estimating a maximum 2-week fenceline concentration given a limited number of years of meteorological data used in the modeling exercise, we determined that it would be inappropriate and ineffective to propose a short-term concentration action level that would trigger corrective action based on a single 2-week sampling event.

One objective for this monitoring program is to identify fugitive emission releases more quickly, so that corrective action can be implemented in a more timely fashion than might otherwise occur without the fenceline monitoring requirement. We believe the proposed fenceline monitoring approach and a rolling annual average concentration action limit (*i.e.,* using results from the most recent 26 consecutive 2-week samples and recalculating the average every 2 weeks) will achieve this objective. The proposed fenceline monitoring will provide the refinery owner or operator with fenceline concentration information once every 2 weeks. Therefore, the refinery owner or operator will be able to timely identify emissions leading to elevated fenceline concentrations. We anticipate that the refinery owners or operators will elect to identify and correct these sources early, in efforts to avoid exceeding the annual benzene concentration action level.

An ''exceedance'' of the benzene concentration action level would occur when the rolling annual average highest fenceline concentration, corrected for background (determined as described previously), exceeds 9 μg/m^3. Upon exceeding the concentration action level, we propose that refinery owners or operators would be required to conduct analyses to identify sources contributing to fenceline concentrations and take corrective action to reduce fugitive emissions to ensure fenceline benzene concentrations remain at or below 9 μg/m^3 (rolling annual average).

Corrective action requirements. As described previously, the EPA is proposing that the owner or operator analyze the samples and compare the rolling annual average fenceline concentration, corrected for background, to the concentration action level. This section summarizes the corrective action requirements in this proposed rule. First, we are proposing that the calculation of the rolling annual average fenceline concentration must be completed within 30 days after the completion of each sampling episode. If the rolling annual average fenceline benzene concentration, corrected for background, exceeds the proposed concentration action level (*i.e.,* 9 μg/m^3), the facility must, within 5 days of comparing the rolling annual average concentration to the concentration action level, initiate a root cause analysis to determine the primary cause, and any other contributing cause(s), of the exceedance. The facility must complete the root cause analysis and implement corrective action within 45 days of initiating the root cause analysis. We are not proposing specific controls or corrections that would be required when the concentration action level is exceeded because the cause of an exceedance could vary greatly from facility to facility and episode to episode, since many different sources emit fugitive emissions. Rather, we are proposing to allow facilities to determine, based on their own analysis of their operations, the action that must be taken to reduce air concentrations at the fenceline to levels at or below the concentration action level, representing full compliance with all refinery MACT requirements, adjusted for additional control requirements we are proposing in today's action.

If, upon completion of the corrective action described above, the owner or operator exceeds the action level for the next two-week sampling episode following the completion of a first set of corrective actions, the owner or operator

would be required to develop and submit to EPA a corrective action plan that would describe the corrective actions completed to date. This plan would include a schedule for implementation of emission reduction measures that the owner or operator can demonstrate is as soon as practical. This plan would be submitted to the Administrator for approval within 30 days of an exceedance occurring during the next two-week sampling episode following the completion of the initial round of corrective action. The EPA would evaluate this plan based on the ambient concentrations measured, the sources identified as contributing to the high fenceline concentration, the potential emission reduction measures identified, and the emission reduction measures proposed to be implemented in light of the costs of the options considered and the reductions needed to reduce the ambient concentration below the action level threshold. To minimize burden on the state implementing agencies and provide additional resources for identifying potential emission sources, we are proposing not to delegate approval of this plan. The refinery owner or operator is not deemed out of compliance with the proposed concentration action level, provided that the appropriate corrective action measures are taken according to the time-frame detailed in an approved corrective action plan.

The EPA requests comment on whether it is appropriate to establish a standard time frame for compliance with actions listed in a corrective action plan. We also request comment on whether the approval of the corrective action plan should be delegated to state, local and tribal governments.

The EPA's post-control dispersion modeling (described in section III.A of this preamble), which relies on reported emissions inventories from the 2011 Refinery ICR, adjusted to reflect compliance with the existing refinery MACT standards as modified by the additional controls proposed in this rulemaking, indicates that fugitive emissions at all refineries are low enough to ensure that fenceline concentrations of benzene do not exceed the proposed concentration action level. Assuming the reported inventories and associated modeling are accurate, we expect that few, if any, facilities will need to engage in required corrective action. We do, however, expect that facilities may identify ''poor-performing'' sources (*e.g.,* unusual leaks) from the fenceline monitoring data and, based on this additional information, will take action to reduce HAP emissions before they would have otherwise been aware of the issue through existing inspection and enforcement measures.

By selecting a fenceline monitoring approach and by selecting benzene as the surrogate for organic HAP emissions, we believe that the proposed monitoring approach will effectively target refinery MACT-regulated fugitive emission sources. However, there may be instances where the fenceline concentration is impacted by a low-level miscellaneous process vent, heat exchange system or other similar source. As these sources are regulated under Refinery MACT 1 and the emissions from these sources were included in our post-control modeling file (from which the 9 $\mu g/m^3$ fenceline concentration action level was developed), sources would not be able to avoid taking corrective action by claiming the exceedance of the fenceline concentration was from one of these emission points rather than from fugitive emission sources.

There may be instances in which the high fenceline concentration is impacted by a non-refinery emission source. The most likely instance of this would be leaks from HON equipment or HON storage vessels co-located at the refinery. However, we consider the fenceline monitoring requirement to be specific to refinery emission sources. Therefore, we are proposing to allow refinery owners or operators to develop site-specific monitoring plans to determine the impact of these non-Refinery emission sources on the ambient benzene concentration measured at the fenceline. This monitoring plan would be identical to those used by refinery owners or operators that elect to determine monitoring location-specific NFS values for nearby off-site sources. In this case, however, the NFS is actually within the refinery fenceline. Upon approval and implementation of the monitoring plan, the refinery owner or operator would determine the highest fenceline concentration corrected for background; the background correction in this case includes a correction for the co-located non-Refinery emission source(s).

The EPA requests comment on whether the corrective action requirements should be limited to exceedances of the fenceline concentration solely from refinery emission sources and whether a refinery owner or operator should be allowed to exceed the annual average fenceline concentration action level if they can demonstrate the exceedance of the action level is due to a non-refinery emissions source. We also request comment on the requirements proposed for refinery owners or operators to demonstrate that the exceedance is caused by a non-refinery emissions source. Specifically, we request comment on whether the ''near-field source'' correction is appropriate for on-site sources and whether there are other methods by which refinery owners or operators with co-located, non-refinery emission sources can demonstrate that their benzene concentrations do not exceed the proposed fenceline concentration action level.

Additional requirements of the fenceline monitoring program. We are proposing that fenceline data at each monitor location be reported electronically for each semiannual period's worth of sampling periods (*i.e.,* 13 to 14 2-week sampling periods per semiannual period). These data would be reported within 45 days of the end of each semiannual period, and will be made available to the public through the EPA's electronic reporting and data retrieval portal, in keeping with the EPA's efforts to streamline and reduce reporting burden and to move away from hard copy submittals of data where feasible.

We are proposing to require the reporting of raw fenceline monitoring data, and not just the HFC, on a semiannual basis; considering the fact that the fenceline monitoring standard is a new approach for fugitive emissions control, and it involves the use of new methods, both analytical and siting methods, this information is necessary for the EPA to evaluate whether this standard has been implemented correctly. Further, the information provided by the raw data, such as the need for additional or less monitoring sites, the range of measured concentrations, the influence of background sources, and the ability to collect and compare data from all refineries, will inform us of further improvements we can make to the fenceline standard, monitoring and analytical methods, approaches for estimating refinery fugitive emissions, and guidance that may be helpful to improve implementation of the fenceline monitoring approach. We seek comment on suggestions for other ways we can monitor and improve the fenceline monitoring requirement.

We are proposing that facilities be required to conduct fenceline monitoring on a continuous basis, in accordance with the specific methods described above, even if benzene concentrations, as measured at the fenceline, routinely are substantially lower than the concentration action level. In light of the low annual

monitoring and reporting costs associated with the fenceline monitors (as described in the next section), and the importance of the fenceline monitors as a means of ensuring the control of fugitives achieves the expected emission levels, we believe it is appropriate to require collection of fenceline monitoring data on a continuous basis. However, the EPA recognizes that fugitive benzene emissions from some facilities may be so low as to make it improbable that exceedances of the concentration action level would ever occur.

In the interest of reducing the cost burden on facilities to comply with this rule, the EPA solicits comment on approaches for reducing or eliminating fenceline monitoring requirements for facilities that consistently measure fenceline concentrations below the concentration action level, and the measurement level that should be used to provide such relief. Such an approach would be consistent with graduated requirements for valve leak monitoring in Refinery MACT 1 and other equipment leak standards, where the frequency of required monitoring varies depending on the percent of leaking valves identified during the previous monitoring period (see, for example, 40 CFR 63.648(c) and 40 CFR 63.168(d)). The EPA requests comment on the minimum time period facilities should be required to conduct fenceline monitoring; the level of performance, in terms of monitored fenceline concentrations, that would enable a facility to discontinue use of fenceline monitors or reduce the frequency of data collection and reporting; and any adjustments to the optical gas imaging camera requirements that would be necessary in conjunction with such changes to the fenceline monitoring requirements.

i. Delayed Coking Units

As noted in section IV.A of this preamble, we are soliciting comments on the need to establish MACT standards for DCU under CAA section 112(d)(2) and (3). Even if we were to assume that there is already an applicable MACT standard for DCU, a technology review of this emission source, as prescribed under CAA section 112(d)(6), would lead us to propose a depressurization limit of 2 psig because of technology advancements since the MACT standards were originally issued and because it is cost effective. Industry representatives have pointed out that Refinery NSPS Ja requires DCU at new and modified sources to depressure to 5 psig, and they have indicated that EPA should not require a lower depressurization limit under a CAA section 112(d)(6) technology review. Further, industry representatives also provided summary-level information (available in Docket ID Number EPA–HQ–OAR–2010–0682 as correspondence from API entitled *Coker Vent Potential Release Limit Preliminary Emission, Cost and Cost Effectiveness Estimates*) on costs to depressure to 5 psig versus 2 psig. While the cost information does not show large differences for any particular facility to depressure at 5 psig versus 2 psig, the information does show a large range in potential costs between refineries. At this time, we do not have the detailed, refinery-specific cost breakdowns to compare against our cost assumptions, which were derived from data obtained for a facility that did install the necessary equipment to meet a 2 psig limit. We also do not have detailed information on the design and operation of the DCU in industry's cost study to evaluate whether there are any differences that would warrant subcategories. We solicit information on designs, operational factors, detailed costs and emissions data for DCU, and we specifically solicit comments on what should be the appropriate DCU depressurization limit if we were to adopt such a requirement pursuant to CAA section 112(d)(6) rather than pursuant to CAA section 112(d)(2) and (3).

2. Refinery MACT 2—40 CFR Part 63, Subpart UUU

The Refinery MACT 2 source category regulates HAP emissions from FCCU, CRU and SRU process vents. Criteria pollutant emissions from FCCU and SRU are regulated under 40 CFR part 60, subparts J and Ja (Refinery NSPS J and Refinery NSPS Ja, respectively). We conducted a technology review of Refinery NSPS J emission limits from 2005 to 2008 and promulgated new standards for FCCU and SRU (among other sources) in Refinery NSPS Ja on June 24, 2008 (73 FR 35838). Our current technology review of Refinery MACT 2 relies upon, but is not limited to, consideration of this recent technology review of Refinery NSPS J for FCCU and SRU.

a. FCCU Process Vent

The FCCU has one large atmospheric vent, the coke burn-off exhaust stream for the unit's catalyst regenerator. HAP emissions from this FCCU process vent include metal HAP associated with entrained catalyst particles and organic HAP, mostly by-products of incomplete combustion from the coke burn-off process. As the control technologies associated with each of these classes of pollutants are very different, the controls associated with each of these classes of pollutants are considered separately.

Metal HAP emission controls. The current Refinery MACT 2 includes several different compliance options, some based on PM as a surrogate for total metal HAP and some based on nickel (Ni) as a surrogate for total metal HAP. Refinery NSPS J was the basis of the PM emission limits and the metal HAP MACT floor in Refinery MACT 2. Refinery NSPS J limits PM from FCCU catalyst regeneration vents to 1.0 gram particulate matter per kilogram (g PM/kg) of coke burn-off, with an additional incremental PM allowance for liquid or solid fuel burned in an incinerator, waste heat boiler, or similar device. Refinery MACT 2 states that FCCU subject to Refinery NSPS J PM emission limits are required to demonstrate compliance with Refinery NSPS J PM emission limits as specified in Refinery NSPS J. As provided in Refinery NSPS J, ongoing compliance with the PM emission limits is determined by compliance with a 30-percent opacity limit, except for one 6-minute average per hour not to exceed 60-percent opacity. FCCU not subject to Refinery NSPS J may elect to comply with the FCCU PM provisions in Refinery NSPS J. Alternatively, they may comply with a 1.0 g PM/kg of coke burn-off emission limit in Refinery MACT 2 (with no provision for an additional incremental PM allowance for liquid or solid fuel burned in an incinerator, waste heat boiler, or similar device). Compliance with this limit in Refinery MACT 2 is demonstrated by either a 1-hour average site-specific opacity limit using a continuous opacity monitoring system (COMS) or APCD-specific daily average operating limits using CPMS.

Refinery MACT 2 also includes two emission limit alternatives that use Ni, rather than PM, as the surrogate for metal HAP. The first of these Ni alternatives is a mass emission limit of 13 grams Ni per hour; the second nickel alternative is an emission limit of 1.0 milligrams Ni per kilogram of coke burn-off. Compliance with the Ni emission limits in Refinery MACT 2 is demonstrated by either a daily average site-specific Ni operating limit (using a COMS and weekly determination of Ni concentration on equilibrium FCCU catalyst), or APCD-specific daily average operating limits using CPMS and monthly average Ni concentration operating limit for the equilibrium FCCU catalyst.

Under Refinery MACT 2, an initial performance demonstration (source test) is required to show that FCCU is

compliant with the emission limits selected by the refinery owner or operator. No additional performance test is required for facilities already complying with Refinery NSPS J. The performance test is a one-time requirement; additional performance tests are only required if the owner or operator elects to establish new operating limits, or to modify the FCCU or control system in such a manner that could affect the control system's performance.

Under the review for Refinery NSPS J, we conducted a literature review as well as a review of the EPA's refinery settlements and state and local regulations affecting refineries to identify developments in practices, processes and control technologies to reduce PM emissions from refinery sources (see *Summary of Data Gathering Efforts: Emission Control and Emission Reduction Activities,* August 19, 2005, and *Review of PM Emission Sources at Refineries,* December 20, 2005, Docket Item Number EPA–HQ–OAR–2007–0011–0042). At that time, we identified regulations for PM from FCCU that were more stringent than the Refinery NSPS J requirements for PM, and we promulgated more stringent PM limits in Refinery NSPS Ja. Refinery NSPS Ja limits PM from FCCU catalyst regeneration vents to 1.0 g PM/kg of coke burn-off for modified or reconstructed FCCU, with no incremental allowance for PM-associated liquid or solid fuels burned in a post-combustion device. Furthermore, an emission limit of 0.5 g PM/kg of coke burn-off was established for FCCU constructed after May 14, 2007.

In addition, the Refinery NSPS J review identified improvements in APCD monitoring practices, which were included in the Refinery NSPS Ja standards. Refinery NSPS J includes a 30-percent opacity limit as the only ongoing monitoring requirements for PM from the FCCU. This 30-percent opacity limit has shown to be lenient and high in comparison to recent federal rules that have included more stringent opacity limits (*e.g.,* 40 CFR part 60, subpart Db with 20-percent opacity), and recent state and local agency rules that omit opacity limits altogether in favor of operating limits for the emission control systems. Based on the Refinery NSPS J review, Refinery NSPS Ja does not include an opacity limit, but includes updated and more appropriate monitoring approaches, such as requiring bag leak detectors (BLD) for fabric filter control systems, and requiring CPMS for electrostatic precipitators (ESP) and wet scrubbers. Additionally, Refinery NSPS Ja includes an option to measure PM emissions directly using a PM CEMS. For this monitoring alternative, a direct PM concentration limit (equivalent to the conventional FCCU PM emission limit in terms of g PM/kg of coke burn-off) is included in the rule. Finally, in our review for Refinery NSPS J, we noted that, even with improved monitoring methods, periodic source testing is needed to verify the performance of the control system as it ages. In Refinery NSPS Ja, annual performance demonstrations are required for affected FCCU. The Refinery NSPS Ja standards for PM from FCCU reflect the latest developments in practices, processes and control technologies. In our current review of Refinery MACT 2, we did not identify any other developments in practices, processes or control technologies since we promulgated Refinery NSPS Ja in 2008.

The conclusions of the technology review conducted for the Refinery NSPS J PM emission limits are directly applicable to Refinery MACT 2; the initial Refinery MACT 2 rule recognized this by providing that compliance with Refinery NSPS J would also be compliance with Refinery MACT 2. We considered the impacts of proposing to revise Refinery MACT 2 to incorporate the developments in monitoring practices and control technologies reflected in the Refinery NSPS Ja limits and monitoring provisions.

As noted above, Refinery NSPS Ja includes a limit of 0.5 g PM/kg of coke burn-off for newly constructed sources. There would be no costs associated with requiring the lower emission limit of 0.5 g PM/kg of coke burn-off for Refinery MACT 2 new sources under CAA section 112(d)(6) because these sources would already be required to comply with that limit under Refinery NSPS Ja. Therefore, we are proposing that it is necessary pursuant to CAA section 112(d)(6) to revise Refinery MACT 2 to incorporate the Refinery NSPS Ja PM limit for new sources.

We are also proposing to establish emission limits and monitoring requirements in Refinery MACT 2 that are consistent with those in Refinery NSPS Ja. This option would not impose any additional cost on sources already subject to Refinery NSPS Ja. We note that for facilities subject to Refinery NSPS J, this would not lead to duplicative or conflicting monitoring requirements because Refinery NSPS J already includes a provision that allows affected facilities subject to Refinery NSPS J to instead comply with the provisions in Refinery NSPS Ja (see 40 CFR 60.100(e)).

In addition, in conjunction with our proposal to revise Refinery MACT 2 to include the more stringent requirements in Refinery NSPS Ja, we are proposing to remove the less stringent compliance option of meeting the requirements of Refinery NSPS J. As described previously, Refinery NSPS J includes an incremental PM emissions allowance for post-combustion devices and relies on a 30-percent opacity limit that is outdated and has been demonstrated to be ineffective at identifying exceedances of the 1.0 g PM/kg coke burn-off emissions limit.

We also reviewed the compliance monitoring requirements for the Refinery MACT 2 PM and Ni-based emission limits. As described previously, Refinery MACT 2 includes operating limits based on APCD operating parameters or site-specific opacity limits. There are differences between the monitoring approaches in Refinery MACT 2 for these limits and Refinery NSPS Ja monitoring approaches for the NSPS PM limit, so we evaluated whether it is necessary, pursuant to CAA section 112(d)(6), to revise the monitoring provisions in Refinery MACT 2 consistent with the requirements in Refinery NSPS Ja.

The first significant difference is in the averaging times used for the different operating limits. Refinery NSPS Ja requires a 3-hour rolling average for the operating limits for parametric monitoring systems; Refinery MACT 2 includes daily averaging of the operating limits. Typically, the averaging time for operating limits is based on the duration of the performance test used to establish those operating limits. As the performance test duration is 3 hours (three 1-hour test runs) and compliance with the PM (or Ni) emission limit is based on the average emissions during this 3-hour period, the most appropriate averaging period for these operating limits is 3 hours. Using a daily average could allow poor performance (*i.e.,* control equipment for shorter periods (*e.g.,* 3-hour averages that are higher than the PM emissions limit in Refinery NSPS Ja). For example, assume an operating limit developed from a performance test has a value of 1 and that values exceeding this level would suggest that the control system is not operating as well as during the performance test (*i.e.,* potentially exceeding the PM emission limit). If the control system is run for 18 hours operating at a level of 0.9 and 6 hours at a level of 1.2, the unit would be in compliance with the daily operating limit even though the unit may have 6 consecutive hours during which the operating limit was exceeded.

Reducing the averaging time does not impact the types of monitors required; it merely requires the owner or operator of the unit to pay more careful attention to the APCD operating parameters. We are proposing that it is necessary, pursuant to CAA section 112(d)(6), to incorporate the use of 3-hour averages rather than daily averages for parameter operating limits in Refinery MACT 2 for both the PM and Ni limits, because this is a cost-effective development in monitoring practice.

The site-specific opacity operating limit for PM in Refinery MACT 2 (for units not electing to comply with Refinery NSPS J) has a 1-hour averaging period, but the Ni operating limits (which use opacity monitoring) have a 24-hour averaging period. These averaging periods are inconsistent with the duration of the performance test, which is over a 3-hour period. We are proposing, pursuant to CAA section 112(d)(6), to incorporate the use of 3-hour averages for the site-specific opacity operating limit and the Ni operating limits rather than daily averages because this is a cost-effective development in monitoring practice.

We also compared the APCD-specific operating parameters used in Refinery MACT 2 to those that we promulgated for Refinery NSPS Ja. The Refinery NSPS Ja rule includes monitoring approaches that are not included in Refinery MACT 2. These include the option of using PM CEMS and requiring BLD for fabric filter control systems. Adding a PM CEMS as an option for demonstrating compliance with the Refinery MACT 2 PM limit (similar to what is provided in Refinery NSPS Ja) would not impact the costs of complying with Refinery MACT 2 because sources can choose whether or not to adopt this monitoring method. With respect to BLD, there is only one refinery that currently uses a baghouse (fabric filter) to control emissions from its FCCU (although one additional unit has indicated that it has plans to install a fabric filter control within the next few years). Under the existing requirements in Refinery MACT 2 (assuming that the FCCU currently operating with a fabric filter has not elected to comply with the Refinery NSPS J PM emission limit option), it is required to comply with a site-specific opacity operating limit. For new, reconstructed, or modified FCCU, Refinery NSPS Ja requires use of BLD. While we generally consider the BLD to be superior to opacity monitors for ensuring fabric filter control systems are operating efficiently, it is difficult to determine what, if any, increment in assurance that the unit is properly controlled would be achieved by requiring the one facility currently operating a fabric filter control system and complying with a site-specific opacity operating limit to switch from a COMS to BLD. Therefore, we are proposing that it is not necessary to require the one existing FCCU with a fabric filter control system to switch from COMS to a BLD system because this would require additional monitoring equipment (with additional costs) and little to no associated increase in assurance that the unit is properly controlled. Although we are not proposing to require existing sources using a fabric filter to use BLD, we are proposing to include BLD as an option to COMS; owners or operators of FCCU using fabric filter-type control systems at existing sources can elect (but are not required) to use BLD in lieu of COMS and the site-specific opacity operating limit.

The Refinery NSPS Ja monitoring requirements for ESP include CPMS for monitoring and recording the total power and the secondary current to the entire system. The current MACT requires monitoring voltage and secondary current or monitoring only the total power to the APCD. While these monitoring requirements are similar, we consider that the Refinery NSPS Ja requirements will provide improved operation of the ESP. As the monitors required to measure these parameters are a routine part of ESP installations, we project no additional costs for monitoring equipment. We expect that a new performance test would be needed to ensure that both total power and secondary current are recorded during the source test. As discussed later in this section, we are proposing to require ongoing performance tests regardless of the monitoring option, so we are not projecting any additional costs specific to revising the monitoring requirements for ESP. Because the Refinery NSPS Ja monitoring and operating requirements for ESP are expected to provide improved performance of the APCD with no incremental costs, we propose that it is necessary, pursuant to CAA section 112(d)(6), to incorporate the total power and the secondary current operating limits into Refinery MACT 2.

Refinery NSPS Ja provides a specific monitoring alternative to pressure drop for jet ejector-type wet scrubbers or any other type of wet scrubbers equipped with atomizing spray nozzles. Owners or operators of FCCU controlled by these types of wet scrubbers can elect to perform daily checks of the air or water pressure to the spray nozzle rather than monitor pressure. Refinery MACT 2 currently excludes these types of control systems from monitoring pressure drop but includes no specific monitoring to ensure the jet ejectors or atomizing spray nozzle systems are properly operating. Since proper functioning of the jet ejectors or atomizing spray nozzles is critical to ensuring these control systems operate at the level contemplated by the MACT, some monitoring/inspection requirement of these components is necessary to ensure compliance with the FCCU PM or Ni emission limit. The owner or operator of a jet ejector-type wet scrubber or other type of wet scrubber equipped with atomizing spray nozzles should be performing routine checks of these systems, such as the daily checks of the air or water pressure to the spray nozzles, as required in Refinery NSPS Ja. These daily checks are consistent with good operational practices for wet scrubbers and should not add significant burden to the FCCU wet scrubber owner or operator. For these reasons, we propose it is necessary to require owners or operators of a jet ejector-type wet scrubber or other type of wet scrubber equipped with atomizing spray nozzles to perform daily checks of the air or water pressure to the spray nozzles pursuant to CAA section 112(d)(6).

Finally, in our action promulgating Refinery NSPS Ja, we noted that, even with improved monitoring methods, periodic source testing is needed to verify the performance of the control system as it ages. In Refinery NSPS Ja, annual performance demonstrations are required for new sources. FCCU subject to Refinery MACT 2 as new sources would also be subject to Refinery NSPS Ja and would have to comply with the annual testing requirements in Refinery NSPS Ja. However, Refinery MACT 2 does not include periodic performance tests for any FCCU. We considered adding an annual testing requirement for FCCU subject to Refinery MACT 2. The annual nationwide cost burden exceeds $1 million per year and we project only modest improvement in control performance resulting from the performance demonstrations. We considered requiring FCCU performance tests once every 5 years (*i.e.,* once per title V permit period). The nationwide annual cost of this additional testing requirement for FCCU is projected to be, on average, $213,000 per year. We consider this to be a reasonable minimum frequency for which affected sources should demonstrate direct compliance with the FCCU emission limits and that this cost is reasonable. Therefore, we propose that it is

necessary, pursuant to CAA section 112(d)(6), to require a performance test once every 5 years for all FCCU under to Refinery MACT 2.

Organic HAP. Refinery MACT 2 uses CO as a surrogate for organic HAP and establishes an emission limit of 500 ppmv CO (dry basis). Some FCCU, referred to as complete-combustion FCCU, employ excess oxygen in the FCCU regenerator and are able to meet this emission limit without the need for a post-combustion device. Other FCCU, referred to as partial-combustion FCCU, do not supply enough air/oxygen for complete combustion of the coke to CO_2 and, therefore, produce a significant quantity of CO in the regenerator exhaust. Partial-combustion FCCU are typically followed by a post-combustion unit, commonly referred to as a CO boiler, to burn the CO in the regenerator exhaust in order to meet the 500 ppmv CO limit (and to recover useful heat from the exhaust stream).

In our review of Refinery NSPS J, we conducted a review of state and local regulations affecting refineries to identify control strategies to reduce CO emissions or VOC emissions from refinery sources (see *Review of VOC Emission Sources at Refineries,* December 14, 2005, Docket Item Number EPA–HQ–OAR–2007–0011–0043). We also conducted a review of federal, state and local regulations affecting refineries to identify control strategies to reduce CO emissions from refinery sources (see *Review of CO Emission Sources at Refineries,* December 22, 2005, Docket Item Number EPA–HQ–OAR–2007–0011–0044). We did not identify any developments in practices, processes and control technologies to reduce CO or VOC emissions from FCCU as part of the review of Refinery NSPS J, and we have not identified any developments in practices, processes and control technologies for FCCU that would reduce organic HAP since promulgation of Refinery MACT 2. We are proposing that it is not necessary to revise the regulatory provisions for organic HAP in the current MACT standards for FCCU, pursuant to CAA section 112(d)(6).

Inorganic HAP. As mentioned previously, Refinery MACT 2 includes a CO emission limit of 500 ppmv. Although this limit is expressly provided as a limit addressing organic HAP emissions, this emission limit is also expected to limit the emissions of oxidizable inorganic HAP, such as HCN. That is, the CO concentration limit was developed as an indicator of complete combustion for all oxidizable pollutants typically found in exhaust gas from the FCCU regenerator operated in partial burn mode. We note that HCN concentrations in FCCU regenerator exhaust with high CO levels also have high HCN concentrations and that HCN concentrations in the regenerator exhaust from complete-combustion FCCU (those meeting the 500 ppmv CO limit without the need for a post-combustion device) are much lower than those from partial burn FCCU prior to a post-combustion device. Thus, we consider that the CO emission limit also acts as a surrogate for the control of oxidizable inorganic HAP, such as HCN.

The source test data from the ICR effort revealed that HCN emissions from FCCU are greater than previous tests indicated, particularly for complete-combustion FCCU. The increase in HCN emissions was observed at units meeting lower NO_X emission limits, which have recently been required by consent decrees, state and local requirements and Refinery NSPS Ja. The higher HCN emissions from complete-combustion FCCU appear to be directly related to operational changes made in efforts to meet these lower NO_X emission limits (*e.g.,* reduced excess oxygen levels in the regenerator and reduced regenerator bed temperatures). These higher HCN emissions were only observed in complete-combustion FCCU; FCCU that operated in partial burn mode followed by a CO boiler or similar post-combustion device had significantly lower HCN emissions subsequent to the post-combustion device.

Based on our review of the available ICR data and the technologies used in practice, we considered establishing specific emission limits for HCN. In order to comply with emission limits for HCN, owners or operators of complete-combustion FCCU would either have to operate their FCCU regenerator at slightly higher temperatures and excess oxygen concentrations (to limit the formation of HCN in the regenerator) or employ a post-combustion device or thermal oxidizer to destroy HCN exhausted from the FCCU regenerator. However, each of these options comes with significant secondary energy and environmental impacts. First, both of these control strategies would yield a significant increase in NO_X emissions. We anticipate that most FCCU owners or operators would have to install a selective catalytic reduction (SCR) system to meet their NO_X emission limits, if applicable. Operation of the SCR would have energy impacts and may have additional secondary $PM_{2.5}$ impacts (associated with ammonia slip from the SCR). We expect that modifying the regenerator operating characteristics is the most cost-effective option, although installing and using a thermal oxidizer may be necessary, depending on the operational characteristics of the regenerator and the HCN control requirement. Using a thermal oxidizer to treat FCCU regenerator exhaust, a gas stream that has limited heating value (due to the already low CO concentrations) would be much more expensive and would have additional energy and secondary impacts associated with the auxiliary fuel needed for the device, as compared to modifying regenerator operating conditions.

We first performed a screening analysis of the impacts of making only operational changes to the FCCU with the highest HCN concentrations. If this control option is not cost effective for these FCCU, it would not be cost effective for units that have lower HCN concentrations and lower HCN emissions. Similarly, if operating changes in the FCCU regenerator alone are not cost effective, then we can assume that installing a thermal oxidizer to achieve this same level of HCN emission reductions would also not be cost effective. We calculated the cost of changing the regenerator parameters and adding an SCR for the FCCU with the highest HCN emissions rate reported in the ICR, which is an annual emissions rate of 460 tpy. This is also the largest FCCU in operation in the United States and its territories. Based on the size of this unit, we project that an SCR would be expected to cost approximately $13-million and have annualized costs of approximately $4.0-million/yr. Thus, if the HCN emissions can be reduced by 95 percent, the cost effectiveness would be approximately $9,000 per ton of HCN. A smaller FCCU had similar HCN concentrations and annual HCN emissions of 141 tpy. Based on the size of this unit, we project an SCR would be expected to cost approximately $7-million and have annualized costs of approximately $1.5-million/yr. Assuming a 95-percent reduction in HCN emissions, the cost effectiveness would be approximately $11,000 per ton of HCN. The second-highest emitting FCCU was larger than this unit, but had lower HCN concentrations. This third unit had emissions of 184 tpy. Based on the size of this unit, we expect that an SCR would cost approximately $9-million and have annualized costs of approximately $2.2-million/yr. Assuming a 95-percent reduction in HCN emissions, the cost effectiveness would be approximately $12,600 per ton of HCN.

These costs are for the FCCU with the largest HCN emissions and the lowest control cost (assuming operational

changes alone are insufficient to significantly reduce HCN emissions), and the average cost effectiveness for these units exceeds $10,000 per ton HCN emissions reduced. Based on the economies of scale and considering lower HCN concentrations for all other units, the costs per ton of HCN removed for a nationwide standard would be higher. If a post-combustion device is needed to achieve a specific HCN emissions limit, the costs would be even higher.

Based on the cost, secondary energy and secondary environmental impacts of an HCN emission limit beyond that achieved by the CO emission limit as a surrogate for HCN, we are proposing, at this time, that it is not necessary, pursuant to CAA section 112(d)(6), to revise the MACT standard to establish a separate HCN standard. As our understanding of the mechanisms of HCN and NO_X formation improves and as catalyst additives evolve, it may be possible to achieve both low NO_X and low HCN emissions without the use of an SCR and/or post-combustion controls. However, at this time our test data indicate an inverse correlation between these two pollutants. The three facilities with the highest HCN concentrations were the facilities with the lowest NO_X concentrations, all of which were below 20 ppmv (dry basis, 0-percent excess air) during the performance tests. While a 20 ppmv NO_X limit may be achievable, we anticipate that further reducing the NO_X new source performance limits for FCCU would either increase $PM_{2.5}$ secondary emissions (via the use of an SCR and its associated ammonia slip) or further increase HCN emissions (if combustion controls are used).

b. CRU Process Vents

A CRU is designed to reform (*i.e.,* change the chemical structure of) naphtha into higher-octane aromatics. The reforming process uses a platinum or bimetal (*e.g.,* platinum and rhenium) catalyst material. Small amounts of coke deposit on the catalyst during the catalytic reaction and this coke is burned off the catalyst to regenerate catalyst activity. There are three types of CRU classified by differences in how the units are designed and operated to effect reforming catalyst regeneration. Semi-regenerative reforming is characterized by shutting down the reforming unit at specified intervals, or at the operator's convenience, for in situ catalyst regeneration. Semi-regenerative CRU typically regenerate catalyst once every 8 to 18 months, with the regeneration cycle lasting approximately 2 weeks. Cyclic-regeneration reforming is characterized by continuous or continual reforming operation with periodic (but frequent) regeneration of catalyst in situ by isolating one of the reactors in the series, regenerating the catalyst, then returning the reactor to the reforming operation. The regeneration of the catalyst in a single reactor may occur numerous times per year (*e.g.,* once a month), and the regeneration of each reactor may take 3 to 5 days to complete. Continuous-regeneration reforming units use moving catalyst bed reactors situated vertically (which is why they are often referred to as platforming units). Catalyst flows down the series of reactors. At the bottom of the last reactor, catalyst is continually isolated and sent to a special regenerator. After regeneration, the regenerated catalyst is continually fed to the first (top) reactor. Thus, continuous-regeneration reforming units are characterized by continuous-reforming operation along with continuous-regeneration operation.

The catalytic reforming reaction is performed in a closed reactor system; there are no emissions associated with the processing portion of the CRU. There is a series of emission points associated with the CRU catalyst regenerator. Regardless of the type of CRU used, there is a series of steps conducted to effect catalyst regeneration. These steps are: (1) Initial depressurization/purge; (2) coke burn-off; (3) catalyst rejuvenation; and (4) reduction/final purge. The primary emissions during the depressurization/purge cycle are organic HAP. Inorganic HAP, predominately HCl and chlorine, are emitted during the coke burn-off and rejuvenation cycles. The reduction purge is mostly inert materials (nitrogen and/or hydrogen). Refinery MACT 2 contains organic HAP emission limits for the depressurization/purge cycle (purging prior to coke-burn-off) and inorganic HAP emission limits for the coke burn-off and catalyst rejuvenation cycles. Our technology review, summarized below, considers each of these emission limits separately. For additional details on the technology review for CRU, see *Technology Review Memorandum for Catalytic Reforming Units at Petroleum Refineries* in Docket ID Number EPA–HQ–OAR–2010–0682.

Organic HAP. Refinery MACT 2 requires the owner or operator to comply with either a 98-percent reduction of TOC or non-methane TOC, or an outlet concentration of 20 ppmv or less (dry basis, as hexane, corrected to 3-percent oxygen). The emission limits for organic HAP for the CRU do not apply to emissions from process vents during depressuring and purging operations when the reactor vent pressure is 5 psig or less. Control technologies used include directing the purge gas directly to the CRU process heater to be burned, recovering the gas to the facility's fuel gas system, or venting to a flare or other APCD. The pressure limit exclusion was provided to allow atmospheric venting of the emissions when the pressure of the vessel fell below that needed to passively direct the purge gas to the APCD (most commonly the CRU process heater or flare).

We did not identify any developments in practices, processes and control technologies for reducing organic HAP emissions from CRU. However, as noted in section IV.A.2 of this preamble, we are proposing to amend the pressure limit exclusion pursuant to CAA sections 112(d)(2) and (3) to clarify that this limit only applies during passive vessel depressuring. Also, as described in section IV.A.3 of this preamble, we are proposing revisions to Refinery MACT 1 and 2, pursuant to CAA sections 112(d)(2) and (3), to ensure flares used as APCD meet the required destruction efficiency, which includes flares used to control the organic HAP emissions from the CRU depressurization/purge vent streams.

Inorganic HAP. Refinery MACT 2 uses HCl as a surrogate for inorganic HAP during the coke burn-off and rejuvenation cycles. Refinery MACT 2 requires owners or operators of existing semi-regenerative CRU to reduce uncontrolled emissions of HCl by 92-percent by weight or to a concentration of 30 ppmv (dry basis, corrected to 3-percent oxygen) during the coke burn-off and rejuvenation cycles. Owners or operators of new semi-regenerative CRU, new or existing cyclic CRU, or new or existing continuous CRU are required to reduce uncontrolled emissions of HCl by 97-percent by weight or to a concentration of 10 ppmv (dry basis, corrected to 3-percent oxygen) during the coke burn-off and rejuvenation cycles. Technologies used to achieve these limits include caustic spray injection, wet scrubbers, and solid adsorption systems. We conducted a technology review for CRU by reviewing the ICR responses and scientific literature. We did not identify any developments in practices, processes and control technologies for reducing inorganic HAP emissions from CRU. We are proposing that it is not necessary to revise the current inorganic HAP MACT standards for CRU, pursuant to CAA section 112(d)(6).

c. SRU Process Vents

Most sulfur recovery plants at petroleum refineries use the Claus reaction to produce elemental sulfur. In the Claus reaction, two moles of hydrogen sulfide (H_2S) react with one mole of SO_2 in a catalytic reactor to form elemental sulfur and water vapor. Prior to the Claus reactors, one-third of the H_2S in the sour gas feed to the sulfur plant must be oxidized to SO_2 to have the correct proportion of H_2S and SO_2 for the Claus reaction. This oxidation step is performed in the ''Claus burner.'' The remaining gas stream, after the elemental sulfur is condensed, is referred to as ''tail gas.'' HAP emissions in tail gas from sulfur recovery plants are predominately COS and CS_2, which are primarily formed as side reactions of the Claus process.

Refinery MACT 2 contains HAP standards for SRU that were based on the Refinery NSPS J SO_2 and reduced sulfur compounds emission limits. Refinery NSPS J includes an emission limit of 300 ppmv reduced sulfur compounds for a reduction control system not followed by an incinerator, and an emission limit of 250 ppmv SO_2 (dry basis, 0-percent excess air) for oxidative control systems or reductive control systems followed by incineration. These Refinery NSPS J limits apply only to Claus sulfur recovery plants with a sulfur recovery capacity greater than 20 long tons per day (LTD). These emission limits effectively required sulfur recovery plants to achieve 99.9-percent sulfur recovery.

Refinery MACT 2 defines SRU as a process unit that recovers elemental sulfur from gases that contain reduced sulfur compounds and other pollutants, usually by a vapor-phase catalytic reaction of sulfur dioxide and hydrogen sulfide (see 40 CFR 63.1579). This definition specifically excludes sulfur recovery processes that do not recover elemental sulfur, such as the LO–CAT II process, but does not necessarily limit applicability to Claus SRU. Refinery MACT 2 requires owners or operators of an SRU that is subject to Refinery NSPS J to meet the Refinery NSPS J limits. Owners or operators of an SRU that is not subject to Refinery NSPS J can elect to meet the emission limits in Refinery NSPS J or meet a reduced sulfur compound limit of 300 ppmv (dry basis, 0-percent excess air) regardless of the type of control system or the presence of an incinerator. Unlike Refinery NSPS J, Refinery MACT 2 does not have a capacity applicability limit, so this 300 ppmv reduced sulfur compound limit is applicable to all SRU (as that term is defined), regardless of size.

Upon completion of our technology review for Refinery NSPS J, we promulgated Refinery NSPS Ja, which includes new provisions for the sulfur recovery plant. First, Refinery NSPS Ja limits are now applicable to all sulfur recovery plants, not just Claus sulfur recovery plants. Second, emission limits were added for sulfur recovery plants with a capacity of 20 LTD or less, to require new, small sulfur recovery plants to achieve a target sulfur recovery efficiency of 99-percent. These limits are a factor of 10 higher than the emission limits for larger sulfur recovery plants (*i.e.,* 3,000 ppmv reduced sulfur compounds for a reduction control system not followed by an incinerator and 2,500 ppmv SO_2 for oxidative control systems or reductive control systems followed by incineration). Refinery NSPS J did not include emission limits for these smaller sulfur recovery plants. Third, new correlations were introduced to provide equivalent emission limits for systems that use oxygen-enriched air in their Claus burner.

The technology review conducted for Refinery NSPS J focused on SO_2 emissions. Under our current technology review for Refinery MACT 2, we considered the developments in practices, processes or control technologies identified in the Refinery NSPS J technology review as they pertain to HAP emissions and the existing Refinery MACT 2 requirements.

We considered the new Refinery NSPS Ja limits for small sulfur recovery plants. While Refinery NSPS Ja establishes criteria pollutant emission limits for these smaller sulfur recovery plants that were previously unregulated for such emissions, these sources are already covered under Refinery MACT 2. Refinery MACT 2 requires these SRU to meet a 300 ppmv reduced sulfur compound limit, which is more stringent than the 3,000 ppmv limit established in Refinery NSPS Ja.

We also considered the new correlations in Refinery NSPS Ja for SRU that use oxygen-enriched air in their Claus burner. In the technology review under Refinery NSPS J, we identified a change in practice in the operation of certain Claus SRU. At the time we promulgated Refinery MACT 2, we assumed that all units were using ambient air in the Claus burner, and we established the same emission limits as in Refinery NSPS J. Now, however, we understand that some facilities are using oxygen-enriched air. This practice lowers the amount of inert gases introduced into the SRU and improves operational performance and reliability of the sulfur recovery plant. Air is approximately 20.9 percent by volume oxygen and 79.1-percent inert gases (predominately nitrogen with 1-percent argon and other inert gases). The inert gases introduced in the Claus burner become a significant portion of the overall tail gas flow. When oxygen enrichment is used in the Claus burner, there are fewer inert gases in the tail gas and a lower overall tail gas flow rate. The same molar flow rate of reduced sulfur compounds will be present in the tail gas, but without the additional flow of inerts from the ambient air, the concentration of the reduced sulfur compounds (or SO_2) in the tail gas is higher.

In developing Refinery NSPS Ja, we included a correlation equation that facilities can use to adjust the concentration limit based on the enriched-oxygen concentration used in the Claus burner. This equation is designed to allow the same mass of emissions for these units as is allowed for units using only ambient air. That is, the emission equation establishes a concentration limit for units using oxygen enrichment so that the mass emissions from the unit do not exceed the mass emissions allowed under the 250 ppmv SO_2 (or 300 ppmv reduced sulfur compounds) emissions limits in Refinery NSPS J and in Refinery MACT 2. The new equation in Refinery NSPS Ja for large sulfur recovery plants (those with sulfur recovery greater than 20 LTD) provides an equivalent mass emissions rate of reduced sulfur HAP from the SRU as is currently required in Refinery MACT 2 while allowing a practice that improves the operational reliability of the unit. There are no costs to providing this option for units using oxygen-enriched air because: (1) It is an option that the owner or operator can elect to meet instead of the xisting 250 ppmv SO_2 emissions limit and (2) owners or operators of SRU that use oxygen-enriched air are expected to already routinely monitor the inlet air oxygen concentration for operational purposes. Therefore, we are proposing that it is necessary, pursuant to CAA section 112(d)(6), to amend Refinery MACT 2 sulfur recovery requirements to include this equation that addresses the use of oxygen-enriched air as a development in practice in SRU process operations.

The emission limits for large sulfur recovery plants (those with sulfur recovery greater than 20 LTD) in Refinery NSPS Ja are equivalent to those in Refinery MACT 2. We are proposing to allow owners or operators subject to Refinery NSPS Ja limits for sulfur

recovery plants with a capacity greater than 20 LTD to comply with Refinery NSPS Ja as a means of complying with Refinery MACT 2.

We have not identified any additional developments in practices, processes or control technologies for HAP from SRU since development of Refinery NSPS Ja.

C. What are the results of the risk assessment and analyses?

1. Inhalation Risk Assessment Results

Table 10 of this preamble provides an overall summary of the results of the inhalation risk assessment.

TABLE 10—PETROLEUM REFINING SOURCE SECTOR INHALATION RISK ASSESSMENT RESULTS

Maximum individual cancer risk (-in-1 million) [a]	Estimated population at increased risk levels of cancer	Estimated annual cancer incidence (cases per year)	Maximum chronic non-cancer TOSHI [b]	Maximum screening acute non-cancer HQ [c]
Actual Emissions				
60	≥ 1-in-1 million: 5,000,000 ≥ 10-in-1 million: 100,000 ≥ 100-in-1 million: 0	0.3	0.9	HQ_{REL} = 5 (Nickel Compounds).
Allowable Emissions [d]				
100	≥ 1-in-1 million: 7,000,000 [e] ≥ 10-in-1 million: Greater than 90,000 [e]. ≥ 100-in-1 million: 0	0.6	1	—

[a] Estimated maximum individual excess lifetime cancer risk due to HAP emissions from the source category.
[b] Maximum TOSHI. The target organ with the highest TOSHI for the Petroleum Refining source sector is the thyroid system for actual emissions and the neurological system for allowable emissions.
[c] The maximum off-site HQ acute value of 5 is driven by emissions of nickel from CCU. See section III.A.3 of this preamble for explanation of acute dose-response values. Acute assessments are not performed on allowable emissions because of a lack of detailed hourly emissions data. However, because of the conservative nature of the actual annual to actual hourly emissions rate multiplier, allowable acute risk estimates will be comparable to actual acute estimates.
[d] The development of allowable emission estimates can be found in the memo entitled *Refinery Risk Estimates for Modeled "Allowable" Emissions,* which can be found in Docket ID Number EPA–HQ–OAR–2010–0682.
[e] Population risks from allowable emissions were only calculated for the model plant emissions (REM) approach. For the 138 facilities modeled using the modeled plant approach the population risks greater than 10-in-1 million was estimated to be 90,000. If we consider the second approach to determining allowable emissions (combined the results of the actual and REM emissions estimates) we estimate that the allowable population risks greater than 10-in-1 million would be greater than 90,000 people. Further, the number of people above 1-in-1 million would also be higher than the 7,000,000 estimated using the REM model.

The inhalation risk modeling performed to estimate risks based on actual emissions relied primarily on emissions data from the ICR, updated based on our quality assurance review as described in section III.A.1 of this preamble.

The results of the chronic baseline inhalation cancer risk assessment indicate that, based on estimates of current actual emissions, the maximum individual lifetime cancer risk (MIR) posed by the refinery source category is 60-in-1 million, with benzene and naphthalene emissions from equipment leaks and storage tanks accounting for 98 percent of the MIR risk. The total estimated cancer incidence from refinery emission sources based on actual emission levels is 0.3 excess cancer cases per year or one case in every 3.3 years, with emissions of naphthalene, benzene, and 2-methylnaphthalene contributing 22 percent, 21 percent and 13 percent, respectively, to this cancer incidence. In addition, we note that approximately 100,000 people are estimated to have cancer risks greater than 10-in-1 million, and approximately 5,000,000 people are estimated to have risks greater than 1-in-1 million as a result of actual emissions from these source categories. When considering the MACT-allowable emissions, the maximum individual lifetime cancer risk is estimated to be up to 100-in-1 million, driven by emissions of benzene and naphthalene from refinery fugitives (*e.g.,* storage tanks, equipment leaks and wastewater) and the estimated cancer incidence is estimated to be 0.6 excess cancer cases per year or one excess case in every 1.5 years. Greater than 90,000 people were estimated to have cancer risks above 10-in-1 million and approximately 7,000,000 people were estimated to have cancer risks above 1-in-1 million considering allowable emissions from all petroleum refineries.

The maximum modeled chronic non-cancer HI (TOSHI) value for the source sector based on actual emissions was estimated to be less than 1. When considering MACT-allowable emissions, the maximum chronic non-cancer TOSHI value was estimated to be about 1.

2. Acute Risk Results

Our screening analysis for worst-case acute impacts based on actual emissions indicates the potential for five pollutants—acetaldehyde, acrolein, arsenic, benzene and nickel—to exceed an HQ value of 1, with an estimated worst-case maximum HQ of 5 for nickel based on the REL values. This REL occurred at a facility reporting nickel emissions from the FCCU vent. One hundred thirty-six of the 142 petroleum refineries had an estimated worst-case HQ less than or equal to 1 for all HAP; except for the one facility that had an estimated REL of 5, the remaining 5 refineries with an REL above 1 had an estimated worst-case HQ less than or equal to 3.

To better characterize the potential health risks associated with estimated worst-case acute exposures to HAP, and in response to a key recommendation from the SAB's peer review of EPA's RTR risk assessment methodologies, we examine a wider range of available acute health metrics than we do for our chronic risk assessments. This is in acknowledgement that there are generally more data gaps and inconsistencies in acute reference values than there are in chronic reference values. By definition, the acute CalEPA REL represents a health-

protective level of exposure, with no risk anticipated below those levels, even for repeated exposures; however, the health risk from higher-level exposures is unknown. Therefore, when a CalEPA REL is exceeded and an AEGL–1 or ERPG–1 level is available (*i.e.,* levels at which mild effects are anticipated in the general public for a single exposure), we have used them as a second comparative measure. Historically, comparisons of the estimated maximum off-site 1-hour exposure levels have not been typically made to occupational levels for the purpose of characterizing public health risks in RTR assessments. This is because occupational ceiling values are not generally considered protective for the general public since they are designed to protect the worker population (presumed healthy adults) for short-duration increases in exposure (less than 15 minutes). As a result, for most chemicals, the 15-minute occupational ceiling values are set at levels higher than a 1-hour AEGL–1, making comparisons to them irrelevant unless the AEGL–1 or ERPG–1 levels are also exceeded. Such is not the case when comparing the available acute inhalation health effect reference values for some of the pollutants considered in this analysis.

The worst-case maximum estimated 1-hour exposure to acetaldehyde outside the facility fence line for the source categories is 1 mg/m^3. This estimated worst-case exposure exceeds the 1-hour REL by a factor of 2 (HQ_{REL}=2) and is well below the 1-hour AEGL–1 (HQ_{AEGL-1}=0.01) and the ERPG–1 (HQ_{ERPG-1}=0.05).

The worst-case maximum estimated 1-hour exposure to acrolein outside the facility fence line for the source categories is 0.005 mg/m^3. This estimated worst-case exposure exceeds the 1-hour REL by a factor of 2 (HQ_{REL}=2) and is below the 1-hour AEGL–1 (HQ_{AEGL-1}=0.1) and the ERPG–1 (HQ_{ERPG-1}=0.04).

The worst-case maximum estimated 1-hour exposure to nickel compounds outside the facility fence line for the source categories is 0.001 mg/m^3. This estimated worst-case exposure exceeds the 1-hour REL by a factor of 5 (HQ_{REL}=5). There are no AEGL, ERPG or short-term occupational values for nickel to use as comparison to the acute 1-hour REL value.

The worst-case maximum estimated 1-hour exposure to arsenic compounds outside the facility fence line for the source categories is 0.0004 mg/m^3. This estimated worst-case exposure exceeds the 1-hour REL by a factor of 2 (HQ_{REL}=2). There are no AEGL, ERPG or short-term occupational values for arsenic to use as comparison to the acute 1-hour REL value.

The maximum estimated 1-hour exposure to benzene outside the facility fence line is 2.7 mg/m^3. This estimated exposure exceeds the REL by a factor of 2 (HQ_{REL}=2), but is significantly below both the 1-hour ERPG–1 and AEGL–1 value (HQ ERPG–1 (or AEGL–1) = 0.02). This exposure estimate neither exceeds the AEGL–1/ERPG–1 values, nor does it exceed workplace ceiling level guidelines designed to protect the worker population for short-duration exposure (less than 15 minutes) to benzene, as discussed below. The occupational short-term exposure limit (STEL) standard for benzene developed by the Occupational Safety and Health Administration is 16 mg/m^3, ''as averaged over any 15-minute period.'' [33] Occupational guideline STEL for exposures to benzene have also been developed by the American Conference of Governmental Industrial Hygienists (ACGIH) [34] for less than 15 minutes [35] (ACGIH threshold limit value (TLV)–STEL value of 8.0 mg/m^3), and by the National Institute for Occupational Safety and Health (NIOSH) [36] ''for any 15 minute period in a work day'' (NIOSH REL–STEL of 3.2 mg/m^3). These shorter duration occupational values indicate potential concerns regarding health effects at exposure levels below the 1-hour AEGL–1 value.

All other HAP and facilities modeled had worst-case acute HQ values less than 1, indicating that the HAP emissions are believed to be without appreciable risk of acute health effects. In characterizing the potential for acute non-cancer risks of concern, it is important to remember the upward bias of these exposure estimates (*e.g.,* worst-case meteorology coinciding with a person located at the point of maximum concentration during the hour) and to consider the results along with the conservative estimates used to develop hourly emissions as described earlier, as well as the screening methodology. Refer to the memo in the docket for this rulemaking (Docket ID Number EPA–HQ–OAR–2010–0682, *Derivation of hourly emission rates for petroleum refinery emission sources used in the acute risk analysis*) for a detailed description of how the hourly emissions were developed for this source sector.

3. Multipathway Risk Screening Results

Results of the worst-case Tier I screening analysis indicate that PB–HAP emissions (based on estimates of actual emissions) from several facilities in this source sector exceed the screening emission rates for POM (PAH), CDDF, mercury compounds, and cadmium compounds. For the compounds and facilities that did not screen out at Tier I, we conducted a Tier II screen. The Tier II screen replaces some of the assumptions used in Tier I with site-specific data, including the land use around the facilities, the location of fishable lakes, and local wind direction and speed. The Tier II screen continues to rely on high-end assumptions about consumption of local fish and locally grown or raised foods (adult female angler at 99th consumption for fish [37] and 90th percentile for consumption of locally grown or raised foods [38]) and uses an assumption that the same individual consumes each of these foods in high end quantities (*i.e.,* that an individual has high end ingestion rates for each food). The result of this analysis was the development of site-specific emission screening levels for POM, CDDF, mercury compounds, and cadmium compounds. It is important to note that, even with the inclusion of some site-specific information in the Tier II analysis, the multi-pathway screening analysis is a still a very conservative, health-protective assessment (*e.g.,* upper-bound consumption of local fish, locally grown, and/or raised foods) and in all likelihood will yield results that serve as an upper-bound multi-pathway risk associated with a facility.

While the screening analysis is not designed to produce a quantitative risk result, the factor by which the emissions exceed the screening value serves as a rough gauge of the ''upper-limit'' risks we would expect from a facility. Thus, for example, if a facility emitted a PB–HAP carcinogen at a level 2 times the screening value, we can say with a high degree of confidence that the actual maximum cancer risks will be less than

[33] 29 CFR 1910.1028, Benzene.

[34] ACGIH (2001) Benzene. In *Documentation of the TLVs® and BEIs® with Other Worldwide Occupational Exposure Values.* ACGIH, 1300 Kemper Meadow Drive, Cincinnati, OH 45240 (ISBN: 978–1–882417–74–1) and available online at *http://www.acgih.org.*

[35] The ACGIH definition of a TLV–STEL states that ''Exposures above the TLV–TWA up to the TLV–STEL should be less than 15 minutes, should occur no more than four times per day, and there should be at least 60 minutes between successive exposures in this range.''

[36] NIOSH. *Occupational Safety and Health Guideline for Benzene; http://www.cdc.gov/niosh/docs/81-123/pdfs/0049.pdf.*

[37] Burger, J. 2002. Daily consumption of wild fish and game: Exposures of high end recreationists. International Journal of Environmental Health Research 12:343–354.

[38] U.S. EPA. Exposure Factors Handbook 2011 Edition (Final). U.S. Environmental Protection Agency, Washington, DC, EPA/600/R–09/052F, 2011.

2-in-1 million. Likewise, if a facility emitted a noncancer PB–HAP at a level 2 times the screening level, the maximum noncancer risks would represent a HQ less than 2. The high degree of confidence comes from the fact that the screens are developed using the very conservative (health-protective) assumptions that we describe above.

Based on the Tier II screening analysis, one facility emits cadmium compounds above the Tier II screening level and exceeds that level by about a factor of 2. Twenty-three facilities emit CDDF as 2,3,7,8-tetrachlorodibenzo-p-dioxin toxicity equivalent (TEQ) above the Tier II screening level, and the facility with the highest emissions of dioxins exceeds the Tier II screening level by about a factor of 40. No facilities emit mercury compounds above the Tier II screening levels. Forty-four facilities emit POM as benzo(a)pyrene TEQ above the Tier II screening level, and the facility with the highest emissions of POM as benzo(a)pyrene TEQ exceeds its screening level by a factor of 30.

Polychlorinated biphenyls (PCB) are PB–HAP that do not currently have multi-pathway screening values and so are not evaluated for potential non-inhalation risks. These HAP, however, are not emitted in appreciable quantities (0.001 tpy) from refinery operations, and we do not believe they contribute to multi-pathway risks for this source category.

Results of the analysis for lead indicate that the maximum annual off-site ambient lead concentration was only 2 percent of the NAAQS for lead, and even if the total annual emissions occurred during a 3-month period, the maximum 3-month rolling average concentrations would still be less than 8 percent of the NAAQS, indicating that there is no concern for multi-pathway risks due to lead emissions.

4. Refined Multipathway Case Study

To gain a better understanding of the uncertainty associated with the multipathway Tier I and II screening analysis, a refined multipathway case study using the TRIM.Fate model was conducted for a single petroleum refinery. The site, a refinery in St. John the Baptist Parish, Louisiana, was selected based upon its close proximity to nearby lakes and farms as well as having one of the highest potential multipathway risks for PAH based on the Tier II analysis. The refined analysis for this facility showed that the Tier II screen for each pollutant over-predicted the potential risk when compared to the refined analysis results. For this site, the Tier II screen for mercury indicated that mercury emissions were 3 times lower than the screening value, indicating a potential maximum HQ for mercury of 0.3. In the refined analysis, the potential HQ was 0.04 or about 7 times lower than that predicted by the Tier II screen. For cadmium emissions, the Tier II screen for this facility indicated that cadmium emissions were about 20 times lower than the screening value, indicating a potential maximum HQ for mercury of 0.05. The results of the refined analysis for the selected site in Louisiana show a maximum cadmium HQ of 0.02 or about 3 times lower than that predicted by the Tier II screen. For PAH emissions, the site selected for the refined analysis had PAH emissions 20 times the PAH Tier II screening value, indicating a potential cancer risk of 20-in-1 million. When the more refined analysis was conducted for this site, the potential cancer risks were estimated to be 2-in-1 million or about 14 times lower than predicted by the Tier II analysis. Finally, for the facility selected for the refined assessment, the emissions of CDDF as 2,3,7,8-tetrachlorodibenzo-p-dioxin TEQ are 5 times higher than the dioxin Tier II screening value, indicating a potential maximum cancer risk of 5–in-1 million. In the refined assessment, the cancer risk from dioxins was estimated to be 2-in-1 million, about one-third of the estimate from the Tier II screen.

Overall, the refined analysis predicts a potential lifetime cancer risk of 4-in-1 million to the maximum most exposed individual (MIR). The non-cancer HQ is predicted to be well below 1 for all target organs. The chronic inhalation cancer risk assessment estimated inhalation cancer risk around this same facility to be approximately 10-in-1 million, due in large part to emissions of naphthalene and 2-methylnaphthalene (both non-persistent, bioaccumulative, and toxic (PBT) HAP). Thus, although highly unlikely, if around this facility the person with the highest chronic inhalation cancer risk is also the same person with the highest individual multipathway cancer risk, then the combined, worst-case MIR for that facility could theoretically be 10-in-1 million (risk estimates are expressed as 1 significant figure).

While this refined assessment was performed on only a single facility, the results of this single refined analysis indicate that if refined analyses were performed for other sites, the risk estimates would consistently be lower than those estimated by the Tier II analysis. In addition, the risks predicted by the multipathway analyses at most facilities are considerably lower than the risk estimates predicted by the inhalation assessment, indicating that the inhalation risk results are in all likelihood the primary factor in our residual risk determination for this source category.

Further details on the site-specific case study can be found in Appendix 10 of the *Draft Residual Risk Assessment for the Petroleum Refining Source Sector,* which is available in Docket ID Number EPA–HQ–OAR–2010–0682.

5. Environmental Risk Screening Results

As described in the *Draft Residual Risk Assessment for the Petroleum Refining Source Sector,* which is available in Docket ID Number EPA–HQ–OAR–2010–0682, we conducted an environmental risk screening assessment for the petroleum refineries source category. In the Tier I screening analysis for PB–HAP (other than lead, which was evaluated differently, as noted in section III.A.6 of this preamble), the individual modeled Tier I concentrations for one facility in the source category exceeded some of the ecological benchmarks for mercury. In addition, Tier I modeled concentrations for four facilities exceeded sediment and soil ecological benchmarks for PAH. Therefore, we conducted a Tier II assessment.

In the Tier II screening analysis for PB–HAP, none of the individual modeled concentrations for any facility in the source category exceeded any of the ecological benchmarks (either the LOAEL or NOAEL).

For lead compounds, we did not estimate any exceedances of the secondary lead NAAQS. Therefore, we did not conduct further assessment for lead compounds.

For acid gases, the average modeled concentration around each facility (*i.e.,* the average concentration of all off-site data points in the modeling domain) did not exceed any ecological benchmark. In addition, for both HCL and HF, each individual concentration (*i.e.,* each off-site data point in the modeling domain) was below the ecological benchmarks for all facilities.

6. Facility-Wide Risk Results

Table 11 of this preamble displays the results of the facility-wide risk assessment.

TABLE 11—PETROLEUM REFINING FACILITY-WIDE RISK ASSESSMENT RESULTS

Number of facilities analyzed	142
Cancer Risk:	
Estimated maximum facility-wide individual cancer risk (-in-1 million)	70
Number of facilities with estimated facility-wide individual cancer risk of 10-in-1 million or more	54
Number of petroleum refining operations contributing 50 percent or more to facility-wide individual cancer risk of 10-in-1 million or more	50
Number of facilities with facility-wide individual cancer risk of 1-in-1 million or more	115
Number of petroleum refining operations contributing 50 percent or more to facility-wide individual cancer risk of 1-in-1 million or more	107
Chronic Non-cancer Risk:	
Maximum facility-wide chronic non-cancer TOSHI	4
Number of facilities with facility-wide maximum non-cancer TOSHI greater than 1	5
Number of petroleum refining operations contributing 50 percent or more to facility-wide maximum non-cancer TOSHI of 1 or more	0

The maximum individual cancer whole-facility risk from all HAP emissions at any petroleum refinery is estimated to be 70-in-1 million, based on actual emissions. Of the 142 facilities included in this analysis, 54 have facility-wide maximum individual cancer risks of 10-in-1 million or greater. At the majority of these facilities (50 of 54), the petroleum refinery operations account for over 50 percent of the risk.

There are 115 facilities with facility-wide maximum individual cancer risks of 1-in-1 million or greater. At the majority of these facilities (107 of 115), the petroleum refinery operations account for over 50 percent of the risk. The facility-wide maximum individual chronic non-cancer TOSHI is estimated to be 4, based on actual emissions. Of the 142 refineries included in this analysis, five have a TOSHI value greater than 1. The highest non-cancer TOSHI results from emissions of chlorine from cooling towers. In each case, the petroleum refinery operations account for less than 20 percent of the TOSHI values greater than 1.

Additional detail regarding the methodology and the results of the facility-wide analyses are included in the risk assessment documentation (*Draft Residual Risk Assessment for the Petroleum Refining Source Sector*), which is available in the docket for this rulemaking (Docket ID Number EPA–HQ–OAR–2010–0682).

7. What demographic groups might benefit from this regulation?

To examine the potential for any environmental justice issues that might be associated with the source categories, we performed a demographic analysis of the population close to the facilities. In this analysis, we evaluated the distribution of HAP-related cancer and non-cancer risks from petroleum refineries across different social, demographic, and economic groups within the populations living near facilities identified as having the highest risks. The methodology and the results of the demographic analyses are included in a technical report, *Draft Risk and Technology Review—Analysis of Socio-Economic Factors for Populations Living Near Petroleum Refineries,* available in the docket for this action (Docket ID Number EPA–HQ–OAR–2010–0682).

The results of the demographic analysis are summarized in Table 12 of this preamble. These results, for various demographic groups, are based on the estimated risks from actual emissions levels for the population living within 50 km of the facilities.

TABLE 12—PETROLEUM REFINING DEMOGRAPHIC RISK ANALYSIS RESULTS

	Nationwide	Population with cancer risk at or above 1-in-1 million	Population with chronic hazard index above 1
Total Population	312,861,265	5,204,234	0
Race by Percent			
White	72	50	0
All Other Races	28	50	0
Race by Percent			
White	72	50	0
African American	13	28	0
Native American	1	1	0
Other and Multiracial	14	21	0
Ethnicity by Percent			
Hispanic	17	29	0
Non-Hispanic	83	71	0
Income by Percent			
Below Poverty Level	14	21	0
Above Poverty Level	86	79	0

TABLE 12—PETROLEUM REFINING DEMOGRAPHIC RISK ANALYSIS RESULTS—Continued

	Nationwide	Population with cancer risk at or above 1-in-1 million	Population with chronic hazard index above 1
Education by Percent			
Over 25 and without High School Diploma	15	23	0
Over 25 and with a High School Diploma	85	77	0

The results of the demographic analysis indicate that emissions from petroleum refineries expose approximately 5,000,000 people to a cancer risk at or above 1-in-1 million. Implementation of the provisions included in this proposal is expected to reduce the number of people estimated to have a cancer risk greater than 1-in-1 million due to HAP emissions from these sources from 5,000,000 people to about 4,000,000. Our analysis of the demographics of the population within 50 km of the facilities indicates potential disparities in certain demographic groups, including the African American, Other and Multiracial, Hispanic, Below the Poverty Level, and Over 25 without a High School Diploma. The population living within 50 km of the 142 petroleum refineries has a higher percentage of minority, lower income and lower education persons when compared to the nationwide percentages of those groups. For example, 50 percent are in one or more minority demographic group, compared to 28 percent nationwide. As noted above, approximately 5,000,000 people currently living within 50 km of a petroleum refinery have a cancer risk greater than 1-in-1 million. We would expect that half of those people are in one or more minority demographic groups.

Because minority groups make up a large portion of the population living near refineries, as compared with their representation nationwide, those groups would similarly see a greater benefit from the implementation of the controls proposed in this rule, if finalized. For example, we estimate that after implementation of the controls proposed in this action (*i.e.,* post-controls), about 1,000,000 fewer people will be exposed to cancer risks greater than 1-in-1 million (*i.e.,* 4,000,000 people). Further, we estimate that approximately 500,000 people no longer exposed to a cancer risk greater than 1-in-1 million would be in a minority demographic group. The post-control risk estimates are discussed further in section III.A.5 of this preamble.

Although the EPA's proposed fenceline monitoring requirement is intended to ensure that owners and operators monitor, manage and, if necessary, reduce fugitive emissions of HAP, we also expect the collected fenceline data to help the EPA understand and identify emissions of benzene and other fugitive emissions that are impacting communities in close proximity to the facility. While currently-available emissions and monitoring data do not indicate that risks to nearby populations are unacceptable (see section IV.D.1 of this preamble), we recognize that the collection of additional data through routine fenceline monitoring can provide important information to communities concerned with potential risks associated with emissions from fugitive sources. We note that the data we are proposing to collect on a semiannual basis may include exceedances of the fenceline action level that a facility could have addressed or could still be actively addressing at the time of the report. As noted in section IV.B.1.h of this preamble, directly monitoring fugitive emissions from each potential emissions source at the facility is impractical. Fenceline monitoring offers a cost-effective alternative for monitoring fugitive emissions from the entire facility. The EPA's proposal to require the electronic reporting of fenceline monitoring data on a semiannual basis will ensure that communities have access to data on benzene levels near the facility, which is directly relevant to the potential health risks posed by the facility. The proposed requirements for fenceline monitoring and corrective action when fugitive emissions from a facility exceed the specified corrective action level will serve as an important backstop to protect the health of the populations surrounding the facility, including minority and low-income populations.

D. What are our proposed decisions regarding risk acceptability, ample margin of safety and adverse environmental effects?

1. Risk Acceptability

As noted in section II.A.1 of this preamble, the EPA sets standards under CAA section 112(f)(2) using ''a two-step standard-setting approach, with an analytical first step to determine an 'acceptable risk' that considers all health information, including risk estimation uncertainty, and includes a presumptive limit on maximum individual lifetime risk (MIR) of approximately 1 in 10 thousand.[39] '' (54 FR 38045, September 14, 1989).

In this proposal, we estimate risks based on actual emissions from petroleum refineries. We also estimate risks from allowable emissions; as discussed earlier, we consider our analysis of risk from allowable emissions to be conservative and as such to represent an upper bound estimate on risk from emissions allowed under the current MACT standards for the source categories.

a. Estimated Risks From Actual Emissions

The baseline inhalation cancer risk to the individual most exposed to emissions from sources regulated by Refinery MACT 1 and 2 is 60-in-1 million based on actual emissions. The estimated incidence of cancer due to inhalation exposures is 0.3 excess cancer cases per year, or 1 case every 3.3 years. Approximately 5,000,000 people face an increased cancer risk greater than 1-in-1 million due to inhalation exposure to actual HAP emissions from these source categories, and approximately 100,000 people face an increased risk greater than 10-in-1 million and up to 60-in-1 million. The agency estimates that the maximum chronic non-cancer TOSHI from inhalation exposure is 0.9 due to actual emissions of HCN from FCCU.

[39] 1-in-10 thousand is equivalent to 100-in-1 million. The EPA currently describes cancer risks as 'n-in-1 million'.

The screening assessment of worst-case acute inhalation impacts from actual emissions indicates the potential for five pollutants—nickel, arsenic, acrolein, benzene and acetaldehyde—to exceed an HQ value of 1, with an estimated worst-case maximum HQ of 5 for nickel based on the REL values. One hundred thirty-six of the 142 petroleum refineries had an estimated worst-case HQ less than or equal to 1 for all HAP. One facility had an estimated worst-case maximum HQ of 5 and the remaining five refineries with an HQ above 1 had an estimated worst-case HQ less than or equal to 3. Considering the conservative, health-protective nature of the approach that is used to develop these acute estimates, it is highly unlikely that an individual would have an acute exposure above the REL. Specifically, the analysis is based on the assumption that worst-case emissions and meteorology would coincide with a person being at this exact location for a period of time long enough to have an exposure level above the conservative REL value.

The Tier II multipathway screening analysis of actual emissions indicated the potential for PAH emissions that are about 30 times the screening level for cancer, dioxin and furans emissions that are about 40 times the cancer screening level and cadmium emissions that are about 2 times the screening level for non-cancer health effects. No facility's emissions were above the screening level for mercury. As we note above, the Tier II multipathway screen is conservative in that it incorporates many health-protective assumptions. For example, we choose inputs from the upper end of the range of possible values for the influential parameters used in the Tier II screen and we assume that the exposed individual exhibits ingestion behavior that would lead to a high total exposure. A Tier II exceedance cannot be equated with a risk value or a HQ or HI. Rather, it represents a high-end estimate of what the risk or hazard may be. For example, an exceedance of 2 for a non-carcinogen can be interpreted to mean that we have high confidence that the HI would be lower than 2. Similarly, an exceedance of 30 for a carcinogen means that we have high confidence that the risk is lower than 30-in-1-million. Our confidence comes from the conservative, or health-protective, assumptions that are used in the Tier II screen.

The refined analysis that we conducted for a specific facility showed that the Tier II screen for each pollutant over-predicted the potential risk when compared to the refined analysis results. That refined multipathway assessment showed that the Tier II screen resulted in estimated risks that are higher than the risks estimated by the refined analysis by 14 times for PAH, 3 times for dioxins and furans, and 3 times for cadmium. The refined assessment results indicate that the multipathway risks are considerably lower than the estimated inhalation risks, and our refined multipathway analysis indicates that multipathway risks are low enough that, while they are considered in our proposed decisions, they do not weigh heavily into those decisions because risks for the source category are driven by inhalation.

b. Estimated Risks From Allowable Emissions

We estimate that the baseline inhalation cancer risk to the individual most exposed to emissions from sources regulated by Refinery MACT 1 and 2 is as high as 100-in-1 million based on allowable emissions. The EPA estimates that the incidence of cancer due to inhalation exposures could be as high as 0.6 excess cancer cases per year, or 1 case approximately every 1.5 years. About 7,000,000 people face an increased cancer risk greater than 1-in-1 million due to inhalation exposure to allowable HAP emissions from these source categories, and greater than 90,000 people face an increased risk greater than 10-in-1 million, and as high as 100-in-1 million. Further, we estimate that the maximum chronic non-cancer TOSHI from inhalation exposure values at all refineries is less than 1 based on allowable emissions.

The baseline risks summarized above do not account for additional risk reductions that we anticipate due to the MACT standards or the technology review requirements we are proposing in this action.

c. Acceptability Determination

In determining whether risk is acceptable, the EPA considered all available health information and risk estimation uncertainty as described above. As noted above, the agency estimated risk from actual and allowable emissions. While there are uncertainties associated with both the actual and allowable emissions, we consider the allowable emissions to be an upper bound, based on the conservative methods we used to calculate allowable emissions.

The results indicate that both the actual and allowable inhalation cancer risks to the individual most exposed are no greater than approximately 100–in-1 million, which is the presumptive limit of acceptability. The MIR based on actual emissions is 60-in-1 million, approximately 60 percent of the presumptive limit. Based on the results of the refined site-specific multipathway analysis summarized above and described in section IV.C.3 of this preamble, we also conclude that the ingestion cancer risk to the individual most exposed is significantly less than 100-in-1 million. In addition, the maximum chronic non-cancer TOSHI due to inhalation exposures is less than 1, and our refined multipathway analysis indicates that non-cancer ingestion risks are estimated to be less than non-cancer risk from inhalation. Finally, the evaluation of acute non-cancer risks was very conservative, and showed acute risks below a level of concern.

In determining risk acceptability, we also evaluated population impacts because of the large number of people living near facilities in the source category. The analysis indicates that there are approximately 5 million people exposed to actual emissions resulting in a cancer risk greater than 1-in-1 million, and a substantially smaller number of people (100,000) are exposed to a cancer risk of greater than 10-in-1 million but less than 100-in-1 million (with a maximum risk of 60-in-1 million). The inhalation cancer incidence is approximately one case in every 3 years based on actual emissions. More detail on this risk analysis is presented in section IV.C and summarized in Tables 10 and 11 of this preamble. The results of the demographic analysis for petroleum refineries indicate that a greater proportion of certain minority groups and low-income populations live near refineries than the national demographic profile. More detail on these population impacts is presented in section IV.C.7 of this preamble. We did not identify any sensitivity to pollutants emitted from these source categories particular to minority and low income populations. Considering the above information, we propose that the risks remaining after implementation of the existing NESHAP for the Refinery MACT 1 and 2 source categories is acceptable.

We also note that the estimated baseline risks for the refineries source categories include risks from emissions from DCU, which are a previously unregulated emission source. As discussed in section IV.A. of this preamble, we are proposing new MACT standards for these sources that would reduce emissions of HAP by 850 tpy. We estimate that these new standards would not affect the MIR, but would

reduce the source category cancer incidence by 15 percent.

We solicit comment on all aspects of our proposed acceptability determination. We note that while we are proposing that the risks estimated from actual and allowable emissions are acceptable, the risks based on allowable emissions are at the presumptive limit of acceptable risk. Furthermore, a significant number of people live in relative proximity to refineries across the country, and therefore a large population is exposed to risks greater than 1-in-1 million. In particular, we solicit comment on the methodology used to estimate allowable emissions. As noted above, we consider the allowable emissions to be an upper bound estimate based on the conservative methods used to calculate such emissions. We recognize, however, that some of the health information concerning allowable emissions arguably borders on the edge of acceptability. Specifically, the analysis of allowable emissions resulted in a MIR of 100-in-1 million, which is the presumptive limit of acceptability, a large number of people (7,000,000) estimated to be exposed at a cancer risk above 1-in-1 million, and an estimated high cancer incidence (one case approximately every 1.5 years). Although we believe that our allowable emissions represent an upper end estimate, we nonetheless solicit comment on whether the health information currently before the Agency should be deemed unacceptable. We also solicit comment on whether our allowable emissions analysis reflects a reasonable estimate of emissions allowed under the current MACT standards. Lastly, we solicit comment on the acceptability of risk considering individuals' potential cumulative inhalation and ingestion pathway exposure. Please provide comments and data supporting your position. Such information will aid the Agency to make an informed decision on risk acceptability as it moves forward with this rulemaking.

2. Ample Margin of Safety

We next considered whether the existing MACT standards provide an ample margin of safety to protect public health. In addition to considering all of the health risks and other health information considered in the risk acceptability determination, in the ample margin of safety analysis we evaluated the cost and feasibility of available control technologies and other measures that could be applied in these source categories to further reduce the risks due to emissions of HAP. For purposes of the ample margin of safety analysis, we evaluated the changes in risk that would occur through adoption of a specific technology by looking at the changes to the risk due to actual emissions. Due to the nature of the allowable risk analysis, which is based on model plants and post processing to combine risk results,[40] we did not evaluate the risk reductions resulting from reducing allowable emissions at individual emission sources. Such an approach would require an unnecessarily complex analysis that would not provide any more useful information than the analysis we undertook using actual emissions. We note that while we did not conduct a specific analysis for allowable emissions, it is reasonable to expect reductions in risk similar to those for actual emissions.

As noted in our discussion of the technology review in section IV.B of this preamble, we identified a number of developments in practices, processes or control technologies for reducing HAP emissions from petroleum refinery processes. As part of the risk review, we evaluated these developments to determine if any of them could reduce risks and whether it is necessary to require any of these developments to provide an ample margin of safety to protect public health.

We evaluated the health information and control options for all of the emission sources located at refineries, including: Storage vessels, equipment leaks, gasoline loading racks, marine vessel loading operations, cooling towers/heat exchange systems, wastewater collection and treatment, FCCU, flares, miscellaneous process vents, CRU and SRU. For each of these sources, we considered chronic cancer and non-cancer risk metrics as well as acute risk. Regarding our ample margin of safety analyses for chronic non-cancer risk for the various emission sources, we note that the baseline TOSHIs are less than 1 for the entire source category and considerably less than 1 for all of the emission sources except for the FCCU (which had an TOSHI of 0.9). Therefore, we did not quantitatively evaluate reductions in the chronic non-cancer TOSHI for sources other than FCCU in the ample margin of safety analysis. Regarding our ample margin of safety analyses for acute risk for all of the various emission sources, we note that our analyses did not identify acute risks at a level of concern and, therefore, we did not quantitatively evaluate reductions in the acute HQ values for each individual emission source in the ample margin of safety analysis. Accordingly, the following paragraphs focus on cancer risk in the determination of whether the standards provide an ample margin of safety to protect public health.

For storage vessels, as discussed in section IV.B of this preamble, we identified and evaluated three control options. Under the technology review, we determined that two of the options, which we call options 1 and 2, are cost effective. We are proposing option 2, which includes all of the requirements of option 1, as part of the technology review. The option 2 controls that we are proposing under the technology review would result in approximately 910 tpy reduction in HAP (a 40-percent reduction from this emission source). As described in section IV.B of this preamble, not only are these controls cost effective, but we estimate a net cost savings because the emission reductions translate into reduced product loss. These controls would reduce the cancer risk to the individual most exposed from 60-in-1 million to 50-in-1 million based on actual emissions at the facility where storage tank emissions were driving the risk. However, the MIR remains unchanged for the refinery source categories, at 60-in 1-million, because the facility with the next highest cancer risk is 60-in-1 million and this risk is driven by another emission source. The option 2 controls also would reduce cancer incidence by approximately 2 percent. Finally, we estimate that the option 2 controls reduce the number of people with a cancer risk greater than 10-in-1 million storage tanks from 3,000 to 60 and reduce the number of people with a cancer risk greater than 1-in-1 million from storage tanks from 140,000 to 72,000. Since these controls reduce cancer incidence, and reduce the number of people exposed to cancer risks greater than 1-in-10 million and 1-in-1 million from storage tank emissions, and are cost effective, we propose that these controls are necessary to provide an ample margin of safety to protect public health. We also evaluated one additional control option for storage vessels, option 3, which incorporated both options 1 and 2 along with additional monitoring requirements. We estimate incremental HAP emission reductions (beyond those provided by option 2) of 90 tpy. The

[40] As described in the memorandum entitled *Refinery Emissions and Risk Estimates for Modeled "Allowable" Emissions,* available in Docket EPA–HQ–OAR–2010–0682, the use of model plants and post-processing was for the purpose of ensuring that our analysis would provide a conservative estimate of actual emissions and thus a conservative estimate of risk.

incremental cost effectiveness for option 3 exceeds $60,000 per ton, which we do not consider cost effective. In addition, the option 3 controls do not result in quantifiable reductions in the cancer risk to the individual most exposed or the cancer incidence beyond the reductions estimated for the option 2 controls. For these reasons, we propose that it is not necessary to require the option 3 controls in order to provide an ample margin of safety to protect public health.

For equipment leaks, we identified and evaluated three control options discussed previously in the technology review section of this preamble (section IV.B). These options are:

- Option 1—monitoring and repair at lower leak definitions;
- Option 2—applying monitoring and repair requirements to connectors; and
- Option 3—optical gas imaging and repair.

We estimate that these three independent control options reduce industry-wide emissions of organic HAP by 24 tpy, 86 tpy, and 24 tpy, respectively. We estimate that none of the control options would reduce the risk to the individual most exposed. We also estimate that the cancer incidence would not change perceptively if these controls were required. Finally, we estimate that the control options do not reduce the number of people with a cancer risk greater than 10-in-1 million or the number of people with a cancer risk greater than 1-in-1 million. As discussed above, the available control options for equipment leaks do not provide quantifiable risk reductions and, therefore, we propose that these controls are not necessary to provide an ample margin of safety.

For gasoline loading racks, we identified and evaluated one control option discussed previously in the technology review section of this preamble (section IV.B). As discussed earlier, this option is a new development that results in emissions that are higher than the current level required under Refinery MACT 1. Since we estimate that no emission reductions would result from this new technology and thus no reduction in risk, we propose that this control option is not necessary to provide an ample margin of safety.

For marine vessel loading operations, we identified and evaluated two control options discussed previously in the technology review section of this preamble (section IV.B). The first option would be to require submerged fill for small and offshore marine vessel loading operations. Based on actual emissions, we project no HAP emission reductions for this option, as all marine vessels that are used to transport bulk refinery liquids are expected to already have the required submerged fill pipes. Accordingly, we do not project any changes in risk. While we are proposing this option under the technology review, because the option is not projected to reduce emissions or risk, we propose that a submerged loading requirement is not necessary to provide an ample margin of safety. We also identified and evaluated the use of add-on controls for gasoline loading at small marine vessel loading operations. In the technology review, we rejected this control option because the cost effectiveness exceeded $70,000 ton of HAP reduced. We estimate that this option would not result in quantifiable changes to any of the risk metrics. Because add-on controls would not result in quantifiable risk reductions and we do not consider the controls to be cost effective, we are proposing that add-on controls for gasoline loading at small marine vessel loading operations are not necessary to provide an ample margin of safety.

For cooling towers and heat exchangers, we did not identify as part of our technology review any developments in processes, practices or controls beyond those that we considered in our beyond-the-floor analysis at the time we set the MACT standards. We note that we issued MACT standards for heat exchange systems in a final rule on October 28, 2009 (74 FR 55686), but existing sources were not required to comply until October 29, 2012. As a result, the reductions were not reflected in the inventories submitted in response to the ICR for refineries and therefore were not included in our risk analysis based on actual emissions. We estimate that these MACT standards will result in an industry-wide reduction of over 600 tons HAP per year (or 85 percent). The projected contribution to risk associated with cooling tower emissions after implementation of these MACT standards for heat exchange systems is approximately 1 percent. Because we did not identify any control options beyond those required by the current standards for cooling towers and heat exchange systems, we are proposing that additional controls for these systems are not necessary to provide an ample margin of safety.

For wastewater collection and treatment systems, we identified and evaluated three options for reducing emissions. We estimate implementing these independent control options would result in emission reductions of 158 tpy (4 percent), 549 tpy (15 percent), and 929 tpy (25 percent), respectively. None of the control options would reduce the cancer risk to the individual most exposed from 60-in-1 million. Option 1 would reduce the cancer incidence by less than 1 percent, and we expect any reduction in cancer incidence that would result from options 2 or 3 to be small because this source accounts for about 10 percent of the cancer incidence from refineries as a whole and the most stringent control option would reduce emissions from these source by only 25 percent. Finally, we estimate that control option 1 would not reduce the number of people with a cancer risk greater than 10-in-1 million or the number of people with a cancer risk greater than 1-in-1 million. We expect any changes to the number of people with a cancer risk greater than 1-in-1 million from implementation of options 2 or 3 to be small for the same reasons mentioned above for cancer incidence. We estimate the cost effectiveness of these options to be $26,600 per ton, $52,100 per ton, and $54,500 per ton of organic HAP reduced, and we do not consider any of these options to be cost effective. Because of the very small reductions in risk and the lack of cost-effective control options, we propose that these controls are not necessary to provide an ample margin of safety.

For FCCU, we did not identify any developments in processes, practices or control technologies for organic HAP. For inorganic HAP from FCCU, in the technology review, we identified and evaluated one control option for an HCN emissions limit and one control option for a PM emissions limit. The PM limit was adopted for new sources in Refinery NSPS Ja as part of our review of Refinery NSPS J. We considered the costs and emission reductions associated with requiring existing sources to meet the new source level for PM under Refinery NSPS Ja (*i.e.,* 0.5 g PM/kg of coke burn-off rather than 1.0 g PM/kg). As indicated in our promulgation of Refinery NSPS Ja, the cost effectiveness of lowering the PM limit for existing sources to the level we are requiring for new sources was projected to be $21,000 per ton of PM reduced (see 73 FR 35845, June 24, 2008). Based on the typical metal HAP concentration in PM from FCCU, the cost effectiveness of this option for HAP metals is approximately $1 million per ton of HAP reduced. We estimate that this control option would not reduce the cancer risk to the individual most exposed, would not change the cancer incidence, and would not change the number of people with estimated cancer

risk greater than 1-in-1 million or 10-in-1 million. For the HCN emissions limit, we evaluated the costs of controlling HCN using combustion controls in combination with SCR. The cost effectiveness of this option was approximately $9,000 per ton of HCN. This control option would reduce the non-cancer HI from 0.9 to 0.8 and would not change any of the cancer risk metrics. Based on the cost effectiveness of these options and the limited reduction in cancer and non-cancer risk (the non-cancer risk is below a level of concern based on the existing standards), we propose that additional controls for FCCU are not necessary to provide an ample margin of safety.

Flares are used as APCD to control emissions from several emission sources covered by Refinery MACT 1 and 2. In this proposed rule, under CAA sections 112(d)(2) and (3), we are proposing operating and monitoring requirements to ensure flares achieve the 98-percent HAP destruction efficiency identified as the MACT Floor in the initial MACT rulemaking in 1995. Flares are critical safety devices that effectively reduce emissions during startup, shutdown, and process upsets or malfunctions. In most cases, flares are the only means by which emissions from pressure relief devices can be controlled. Thus, we find that properly-functioning flares act to reduce HAP emissions, and thereby risk, from petroleum refinery operations. The changes to the flare requirements that we are proposing under CAA sections 112(d)(2) and (3) will result in sources meeting the level required by the original standards, and we did not identify any control options that would further reduce the HAP emissions from flares. Therefore, we are proposing that additional controls for flares are not necessary to provide an ample margin of safety.

For the remaining emission sources within the Refinery MACT 1 and Refinery MACT 2 source categories, including miscellaneous process vents, CRU, and SRU, we did not identify any developments in processes practices and control technologies. Therefore, we are proposing that additional controls for these three Refinery MACT 1 and 2 emission sources are not necessary to provide an ample margin of safety.

In summary, we propose that the original Refinery MACT 1 and 2 MACT standards, along with the proposed requirements for storage vessels described above, provide an ample margin of safety to protect public health. We are specifically requesting comment on whether there are additional control measures for emission sources subject to Refinery MACT 1 and Refinery MACT 2 that are necessary to provide an ample margin of safety to protect public health. In particular, we are requesting that states identify any controls they have already required for these facilities, controls they are currently considering, or other controls of which they may be aware.

While not part of our decisions regarding residual risk, we note that DCU are an important emission source with respect to risk from refineries. As described in section IV.A of this preamble, we are proposing new MACT standards under CAA sections 112(d)(2) and (3) for DCU. For informational purposes, we also looked at the risk reductions that would result from implementation of those standards. We estimate no reduction in the cancer risk to the individual most exposed and a decrease in cancer incidence of 0.05 cases per year, or approximately 15 percent. While our decisions on risk acceptability and ample margin of safety are supported even in the absence of these reductions, if we finalize the proposed requirements for DCU, they would further strengthen our conclusions that the standards provide an ample margin of safety to protect public health.

3. Adverse Environmental Effects

We conducted an environmental risk screening assessment for the petroleum refineries source category for lead, mercury, cadmium, PAH, dioxins and furans, HF, and HCl. For mercury, cadmium, PAH, and dioxins and furans, none of the individual modeled concentrations for any facility in the source category exceeded any of the Tier II ecological benchmarks (either the LOAEL or NOAEL). For lead, we did not estimate any exceedances of the secondary lead NAAQS. For HF and HCl, the average modeled concentration around each facility (*i.e.,* the average concentration of all off-site data points in the modeling domain) did not exceed any ecological benchmark. Based on these results, EPA proposes that it is not necessary to set a more stringent standard to prevent, taking into consideration costs, energy, safety, and other relevant factors, an adverse environmental effect.

E. What other actions are we proposing?

We are proposing the following changes to Refinery MACT 1 and 2 as described below: (1) Revising the SSM provisions in order to ensure that the subparts are consistent with the court decision in *Sierra Club* v. *EPA,* 551 F. 3d 1019 (D.C. Cir. 2008), which vacated two provisions that exempted sources from the requirement to comply with otherwise applicable section 112(d) emission standards during periods of SSM; (2) proposing to clarify requirements related to open-ended valves or lines; (3) adding electronic reporting requirements in Refinery MACT 1 and 2; and (4) updating the General Provisions cross-reference tables.

1. SSM

In its 2008 decision in *Sierra Club* v. *EPA*, 551 F.3d 1019 (D.C. Cir. 2008), the United States Court of Appeals for the District of Columbia Circuit vacated portions of two provisions in the EPA's CAA section 112 regulations governing the emissions of HAP during periods of SSM. Specifically, the Court vacated the SSM exemption contained in 40 CFR 63.6(f)(1) and 40 CFR 63.6(h)(1), holding that under section 302(k) of the CAA, emissions standards or limitations must be continuous in nature and that the SSM exemption violates the CAA's requirement that some section 112 standards apply continuously.

We are proposing the elimination of the SSM exemption in 40 CFR part 63, subparts CC and UUU. Consistent with *Sierra Club* v. *EPA,* we are proposing standards in these rules that apply at all times. We are also proposing several revisions to Table 6 of subpart CC of 40 CFR part 63 and to Table 44 to subpart UUU of 40 CFR part 63 (the General Provisions Applicability tables for each subpart) as explained in more detail below. For example, we are proposing to eliminate the incorporation of the General Provisions' requirement that the source develop an SSM plan. We also are proposing to eliminate and revise certain recordkeeping and reporting requirements related to the SSM exemption as further described below.

The EPA has attempted to ensure that the provisions we are proposing to eliminate are inappropriate, unnecessary, or redundant in the absence of the SSM exemption. We are specifically seeking comment on whether we have successfully done so.

In proposing the standards in this rule, the EPA has taken into account startup and shutdown periods and, for the reasons explained below, we are proposing alternate standards for those periods for a few select emission sources. We expect facilities can meet nearly all of the emission standards in Refinery MACT 1 and 2 during startup and shutdown, including the amendments we are proposing in this action. For most of the emission sources, APCD are operating prior to process startup and continue to operate through process shutdown.

For Refinery MACT 1 and 2, we identified three emission sources for which specific startup and shutdown provisions may be needed. First, as noted above, most APCD used to control metal HAP emissions from FCCU under Refinery MACT 2 (*e.g.,* wet scrubber, fabric filter, cyclone) would be operating before emissions are routed to them and would be operating during startup and shutdown events in a manner consistent with normal operating periods, such that the monitoring parameter operating limits set during the performance test are maintained and met. However, we recognize that there are safety concerns associated with operating an ESP during startup of the FCCU, as described in the following paragraphs. Therefore, we are proposing specific PM standards for startup of FCCU controlled with an ESP under Refinery MACT 2.

During startup of the FCCU, ''torch oil'' (heavy oil typically used as feed to the unit via the riser) is injected directly into the regenerator and burned to raise the temperature of the regenerator and catalyst to levels needed for normal operation. Given the poor mixing of fuel and air in the regenerator during this initial startup, it is difficult to maintain optimal combustion characteristics, and high CO concentrations are common. Elevated CO levels pose an explosion threat due to the high electric current and potential for sparks within the ESP. Consequently, it is common practice to bypass the ESP during startup of the FCCU. Once torch oil is shut off and the regenerator is fueled by catalyst coke burn-off, the CO levels in the FCCU regenerator off-gas will stabilize and the gas can be sent to the ESP safely.

When the ESP is offline, the operating limits for the ESP are meaningless. During much of the startup process, either catalyst is not circulating between the FCCU regenerator and reactor or the catalyst circulation rate is much lower than during normal operations. While the catalyst is not circulating or is circulating at reduced rates, the PM and metal HAP emissions are expected to be much lower than during normal operations. Therefore, the cyclone separators that are internal to the FCCU regenerator should provide reasonable PM control during this initial startup. To ensure the internal cyclones are operating efficiently, we are proposing that FCCU using an ESP as the APCD meet a 30-percent opacity limit (on a 6-minute rolling average basis) during the period that torch oil is used during FCCU startup. This opacity limit was selected because it has been used historically to assess compliance with the PM emission limit for FCCU in Refinery NSPS J and because the emission limit can be assessed using manual opacity readings, eliminating the need to install a COMS. We note that Refinery NSPS J includes the exception for one 6-minute average of up to 60-percent opacity in a 1-hour period primarily to accommodate soot blowing events. As no soot blowing should be performed prior to the ESP coming on-line, we are not including this exception to the proposed 30-percent opacity limit during startup for FCCU that are controlled by an ESP.

Second, for emissions of organic HAP from FCCU under Refinery MACT 2, we also expect that APCD would be operating before emissions are routed to them, and would be operating during startup and shutdown events in a manner consistent with normal operating periods, such that the monitoring parameter operating limits set during the performance test are maintained and met. However, many FCCU operate in ''complete combustion'' mode without a post-combustion device. In other words, for FCCU without a post-combustion device, organic HAP are controlled by the FCCU itself, so there is no separate APCD that could be operating during startup and demonstrating continuous compliance with the monitoring parameter operating limits. Therefore, we are proposing specific CO standards for startup of FCCU without a post-combustion device under Refinery MACT 2.

As mentioned previously, ''torch oil'' is injected directly into the regenerator and burned during FCCU startup to raise the temperature of the regenerator and catalyst to levels needed for normal operation. During this period, CO concentrations often will exceed the 500 ppm emissions limit due to the poor mixing of fuel and air in the regenerator. The emissions limit is based on CO emissions, as a surrogate for organic HAP emissions, and the emission limit is evaluated using a 1-hour averaging period. This 1-hour averaging period does not provide adequate time for short-term excursions that occur during startup to be offset by lower emissions during normal operational periods.

Based on available data during normal operations, ensuring adequate combustion (indicated by CO concentration levels below 500 ppmv) minimizes organic HAP emissions. Low levels of CO in the exhaust gas are consistently achieved during normal operations when oxygen concentrations in the exhaust gas exceed 1-percent by volume (dry basis). Thus, maintaining an adequate level of excess oxygen for the combustion of fuel in the FCCU is expected to minimize organic HAP emissions. Emissions of CO during startup result from a series of reactions with the fuel source and are dependent on mixing, local oxygen concentrations, and temperature. While the refinery owner or operator has direct control over air blast rates, CO emissions may not always directly correlate with the air blast rate. Exhaust oxygen concentrations are expected to be more directly linked with air blast rates and are, therefore, more directly under control of the refinery owner or operator. We are proposing an excess oxygen concentration of 1 volume percent (dry basis) based on a 1-hour average during startup. We consider the 1-hour averaging period for the oxygen concentration in the exhaust gas from the FCCU to be appropriate during periods of FCCU startup because air blast rates can be directly controlled to ensure adequate oxygen supply on a short-term basis.

Third, we note that the SRU is unique in that it essentially is the APCD for the fuel gas system at the facility. The SRU would be operating if the refinery is operating, including during startup and shutdown events. There are typically multiple SRU trains at a facility. Different trains can be taken off-line as sour gas production decreases to maintain optimal operating characteristics of the operating SRU during startup or shutdown of a set of process units. Thus, the sulfur recovery plant is expected to run continuously and would only shut down its operation during a complete turnaround or shutdown of the facility. For these limited situations, the 12-hour averaging time provided for the SRU emissions limitation under Refinery MACT 2 may not be adequate time in which to shut down the unit without exceeding the emissions limitation. Therefore, we are proposing specific standards for SRU during periods of shutdown.

We note also that, for SRU subject to Refinery NSPS J or electing to comply with Refinery NSPS J as provided in Refinery MACT 2, the emissions limit is in terms of SO_2 concentration for SRU with oxidative control systems or reductive control systems followed by an incinerator. While the SO_2 concentration limit provides a reasonable proxy of the reduced sulfur HAP emissions during normal operations, it does not necessarily provide a good indication of reduced sulfur HAP emissions during periods of shutdown. During periods of shutdown, the sulfur remaining in the unit is purged and combusted generally in a thermal oxidizer or a flare. Although the sulfur loading to the thermal oxidizer

during shutdown may be higher than during normal operations (thereby causing an increase in the SO_2 concentration and exceedance of the SO_2 emissions limitation), appropriate operation of the thermal oxidizer will adequately control emissions of reduced sulfur HAP. Thus, during periods of shutdown, the 300 ppmv reduced sulfur compound emission limit alternative (provided for SRU not subject to Refinery NSPS J) is a better indicator of reduced sulfur HAP emissions. In Refinery MACT 2, SRU that elect to comply with the 300 ppmv reduced sulfur compound emission limit (*i.e.,* those not subject to Refinery NSPS J or electing to comply with Refinery NSPS J) and that use a thermal incinerator for sulfur HAP control are required to maintain a minimum temperature and excess oxygen level (as determined through a source test of the unit) to demonstrate compliance with the reduced sulfur compound emission limitation.

In Refinery MACT 2, SRU subject to Refinery NSPS J (or that elect to comply with Refinery NSPS J) that use an incinerator to control sulfur HAP emissions are required to install an SO_2 CEMS to demonstrate compliance with the SO_2 emission limitation. For these units, it is impractical to require installation of a reduced sulfur compound monitor or to require a source test to establish operating parameters during shutdown of the SRU because of the few hours per year that the entire series of SRU trains are shutdown. Although the autoignition temperature of COS is unknown, based on the autoignition temperature of CS_2 (between 200 and 250 °F) and the typical operating characteristics of thermal oxidizers used to control emissions from SRU, we are proposing that, for periods of SRU shutdown, diverting the purge gases to a flare meeting the design and operating requirements in 40 CFR 63.670 (or, for a limited transitional time period, 40 CFR 63.11) or to a thermal oxidizer operated at a minimum temperature of 1200 °F and a minimum outlet oxygen concentration of 2 volume percent (dry basis). We believe that this provides adequate assurance of compliance with the 300 ppmv reduced sulfur compound emission limitation for SRU because incineration at these temperatures was determined to be the MACT floor in cases where no tail gas treatment units were used (*i.e.,* units not subject to Refinery NSPS J).

For all other emission sources, we believe that the requirements that apply during normal operations should apply during startup and shutdown. For Refinery MACT 1, these emission sources include process vents, transfer operations, storage tanks, equipment leaks, heat exchange systems, and wastewater. Emission reductions for process vents and transfer operations, such as gasoline loading racks and marine tank vessel loading, are typically achieved by routing vapors to thermal oxidizers, carbon adsorbers, absorbers and flares. It is common practice to start an APCD prior to startup of the emissions source it is controlling, so the APCD would be operating before emissions are routed to it. We expect APCD would be operating during startup and shutdown events in a manner consistent with normal operating periods, and that these APCD will be operated to maintain and meet the monitoring parameter operating limits set during the performance test. We do not expect startup and shutdown events to affect emissions from equipment leaks, heat exchange systems, wastewater, or storage tanks. Leak detection programs associated with equipment leaks and heat exchange systems are in place to detect leaks, and, therefore, it is inconsequential whether the process is operating under normal operating conditions or is in startup or shutdown. Wastewater emissions are also not expected to be significantly affected by startup or shutdown events because the control systems used can operate while the wastewater treatment system is in startup or shutdown. Working and breathing losses from storage tanks are the same regardless of whether the process is operating under normal operating conditions or if it is in a startup or shutdown event. Degassing of a storage tank is common for shutdown of a process; the residual emissions in a storage tank are vented as part of the cleaning of the storage tank. We evaluated degassing controls as a control alternative for storage vessels and do not consider these controls to be cost effective (see memorandum *Survey of Control Technology for Storage Vessels and Analysis of Impacts for Storage Vessel Control Options,* Docket Item Number EPA–HQ–OAR–2010–0871–0027). Based on this review, we are not proposing specific standards for storage vessels during startup or shutdown.

Periods of startup, normal operations, and shutdown are all predictable and routine aspects of a source's operations. However, by contrast, malfunction is defined as a sudden, infrequent, and not reasonably preventable failure of air pollution control and monitoring equipment, process equipment or a process to operate in a normal or usual manner (see 40 CFR 63.2). The EPA has determined that CAA section 112 does not require that emissions that occur during periods of malfunction be factored into development of section 112 standards. Under section 112, emissions standards for new sources must be no less stringent than the level ''achieved'' by the best-controlled similar source and for existing sources generally must be no less stringent than the average emission limitation ''achieved'' by the best-performing 12 percent of sources in the category. There is nothing in section 112 that directs the EPA to consider malfunctions in determining the level ''achieved'' by the best-performing sources when setting emission standards. As the D.C. Circuit has recognized, the phrase ''average emissions limitation achieved by the best performing 12 percent of'' sources ''says nothing about how the performance of the best units is to be calculated.'' *Nat'l Ass'n of Clean Water Agencies* v. *EPA,* 734 F.3d 1115, 1141 (D.C. Cir. 2013). While the EPA accounts for variability in setting emissions standards, nothing in section 112 requires the EPA to consider malfunctions as part of that analysis. A malfunction should not be treated in the same manner as the type of variation in performance that occurs *during routine operations of a source.* A malfunction is a failure of the source to perform in a ''normal or usual manner'' and no statutory language compels EPA to consider such events in setting standards based on ''best performers.''

Further, accounting for malfunctions in setting emissions standards would be difficult, if not impossible, given the myriad different types of malfunctions that can occur across all sources in the category, and given the difficulties associated with predicting or accounting for the frequency, degree, and duration of various malfunctions that might occur. As such, the performance of units that are malfunctioning is not ''reasonably'' foreseeable. *See, e.g., Sierra Club* v. *EPA,* 167 F. 3d 658, 662 (D.C. Cir. 1999) (the EPA typically has wide latitude in determining the extent of data-gathering necessary to solve a problem. We generally defer to an agency's decision to proceed on the basis of imperfect scientific information, rather than to ''invest the resources to conduct the perfect study.''). *See also, Weyerhaeuser* v. *Costle,* 590 F.2d 1011, 1058 (D.C. Cir. 1978) (''In the nature of things, no general limit, individual permit, or even any upset provision can anticipate all upset situations. After a certain point, the transgression of regulatory limits caused by

'uncontrollable acts of third parties,' such as strikes, sabotage, operator intoxication or insanity, and a variety of other eventualities, must be a matter for the administrative exercise of case-by-case enforcement discretion, not for specification in advance by regulation.''). In addition, emissions during a malfunction event can be significantly higher than emissions at any other time of source operation, and thus, accounting for malfunctions in setting standards could lead to standards that are significantly less stringent than levels that are achieved by a well-performing non-malfunctioning source. It is reasonable to interpret section 112 to avoid such a result. The EPA's approach to malfunctions is consistent with CAA section 112 and is a reasonable interpretation of the statute.

In the event that a source fails to comply with the applicable CAA section 112(d) standards as a result of a malfunction event, the EPA would determine an appropriate response based on, among other things, the good-faith efforts of the source to minimize emissions during malfunction periods, including preventative and corrective actions, as well as root cause analyses to ascertain and rectify excess emissions. The EPA would also consider whether the source's failure to comply with the CAA section 112(d) standard was, in fact, sudden, infrequent, not reasonably preventable and was not instead caused in part by poor maintenance or careless operation, as described in the definition of malfunction (see 40 CFR 63.2). Further, to the extent the EPA files an enforcement action against a source for violation of an emission standard, the source can raise any and all defenses in that enforcement action and the federal district court will determine what, if any, relief is appropriate. The same is true for citizen enforcement actions. Similarly, the presiding officer in an administrative proceeding can consider any defense raised and determine whether administrative penalties are appropriate.

In several prior rules, the EPA had included an affirmative defense to civil penalties for violations caused by malfunctions in an effort to create a system that incorporates some flexibility, recognizing that there is a tension, inherent in many types of air regulation, to ensure adequate compliance while simultaneously recognizing that despite the most diligent of efforts, emission standards may be violated under circumstances entirely beyond the control of the source. Although the EPA recognized that its case-by-case enforcement discretion provides sufficient flexibility in these circumstances, it included the affirmative defense to provide a more formalized approach and more regulatory clarity. *See Weyerhaeuser Co.* v. *Costle,* 590 F.2d 1011, 1057–58 (D.C. Cir. 1978) (holding that an informal case-by-case enforcement discretion approach is adequate); *but see Marathon Oil Co.* v. *EPA,* 564 F.2d 1253, 1272–73 (9th Cir. 1977) (requiring a more formalized approach to consideration of ''upsets beyond the control of the permit holder.''). Under the EPA's regulatory affirmative defense provisions, if a source could demonstrate in a judicial or administrative proceeding that it had met the requirements of the affirmative defense in the regulation, civil penalties would not be assessed. Recently, the United States Court of Appeals for the District of Columbia Circuit vacated such an affirmative defense in one of the EPA's section 112(d) regulations. *NRDC* v. *EPA,* No. 10–1371 (D.C. Cir. April 18, 2014) 2014 U.S. App. LEXIS 7281 (vacating affirmative defense provisions in section 112(d) rule establishing emission standards for Portland cement kilns). The court found that the EPA lacked authority to establish an affirmative defense for private civil suits and held that under the CAA, the authority to determine civil penalty amounts lies exclusively with the courts, not the EPA. Specifically, the Court found: ''As the language of the statute makes clear, the courts determine, on a case-by-case basis, whether civil penalties are 'appropriate.' '' *See NRDC,* 2014 U.S. App. LEXIS 7281 at *21 (''[U]nder this statute, deciding whether penalties are 'appropriate' in a given private civil suit is a job for the courts, not EPA.'').[41] In light of *NRDC,* the EPA is not including a regulatory affirmative defense provision in this rulemaking. As explained above, if a source is unable to comply with emissions standards as a result of a malfunction, the EPA may use its case-by-case enforcement discretion to provide flexibility, as appropriate. Further, as the D.C. Circuit recognized, in an EPA or citizen enforcement action, the court has the discretion to consider any defense raised and determine whether penalties are appropriate. *Cf. NRDC,* 2014 U.S. App. LEXIS 7281 *at *24.* (arguments that violation were caused by unavoidable technology failure can be made to the courts in future civil cases when the issue arises). The same logic applies to EPA administrative enforcement actions.

a. General Duty

We are proposing to revise the 40 CFR part 63, subpart CC General Provisions table (Table 6) entry for 63.6(e)(1)(i) by changing the ''Yes'' in the second column to a ''No.'' Similarly, we are proposing to revise the 40 CFR part 63, subpart UUU General Provisions table (Table 44) entry for § 63.6(e)(1)(i) by changing the ''Yes'' in the third column to a ''No.'' We are making this change because section 63.6(e)(1)(i) describes the general duty to minimize emissions and the current characterizes what the general duty entails during periods of SSM and that language is no longer necessary or appropriate in light of the elimination of the SSM exemption. We are proposing instead to add general duty regulatory text at 40 CFR 63.642(n) and 40 CFR 63.1570(c) that reflects the general duty to minimize emissions while eliminating the reference to periods covered by an SSM exemption. With the elimination of the SSM exemption, there is no need to differentiate between normal operations, startup and shutdown, and malfunction events in describing the general duty. Therefore the language the EPA is proposing does not include that language from 40 CFR 63.6(e)(1).

We are also proposing to revise the 40 CFR part 63, subpart CC General Provisions table (Table 6) entry for 63.6(e)(1)(ii) by changing the ''Yes'' in the second column to a ''No.'' Similarly, we are also proposing to revise the 40 CFR part 63, subpart UUU General Provisions table (Table 44) entry for § 63.6(e)(1)(ii) by changing the ''Yes'' in the third column to a ''No.'' Section 63.6(e)(1)(ii) imposes requirements that are not necessary with the elimination of the SSM exemption or are redundant of the general duty requirement being added at 40 CFR 63.642(n) and 40 CFR 63.1570(c).

b. SSM Plan

We are proposing to revise the 40 CFR part 63, subpart CC General Provisions table (Table 6) entries for 63.6(e)(3)(i) and 63.6(e)(3)(iii)–63.6(e)(3)(ix) by changing the ''Yes'' in the second column to a ''No.'' Similarly, we are proposing to revise the 40 CFR part 63, subpart UUU General Provisions table (Table 44) entries for § 63.6(e)(3)(i)–(iii), § 63.6(e)(3)(iv), § 63.6(e)(3)(v)–(viii), § 63.6(e)(3)(ix) to be entries for 63.6(e)(3)(i) and 63.6(e)(3)(iii)–63.6(e)(3)(ix) with ''No'' in the third column and § 63.6(e)(3)(ii) with ''Not

[41] The court's reasoning in *NRDC* focuses on civil judicial actions. The Court noted that ''EPA's ability to determine whether penalties should be assessed for Clean Air Act violations extends only to administrative penalties, not to civil penalties imposed by a court.'' *Id.*

Applicable'' in the third column (that section is reserved). Generally, these paragraphs require development of an SSM plan and specify SSM recordkeeping and reporting requirements related to the SSM plan. As noted, the EPA is proposing to remove the SSM exemptions. Therefore, affected units will be subject to an emission standard during such events. The applicability of a standard during such events will ensure that sources have ample incentive to plan for and achieve compliance and thus the SSM plan requirements are no longer necessary.

c. Compliance With Standards

We are proposing to revise the 40 CFR part 63, subpart CC General Provisions table (Table 6) entry for 63.6(f)(1) by changing the ''Yes'' in the second column to a ''No.'' Similarly, we are proposing to revise the 40 CFR part 63, subpart UUU General Provisions table (Table 44) entry for § 63.6(f)(1) by changing the ''Yes'' in the third column to a ''No.'' The current language of 40 CFR 63.6(f)(1) exempts sources from non-opacity standards during periods of SSM. As discussed above, the court in *Sierra Club* vacated the exemptions contained in this provision and held that the CAA requires that some section 112 standard apply continuously. Consistent with *Sierra Club,* the EPA is proposing to revise standards in this rule to apply at all times.

We are proposing to revise the 40 CFR part 63, subpart CC General Provisions table (Table 6) entry for 63.6(h)(1) by changing the ''Yes'' in the second column to a ''No.'' Similarly, we are proposing to revise the 40 CFR part 63, subpart UUU General Provisions table (Table 44) entry for § 63.6(h)(1) by changing the ''Yes'' in the third column to a ''No.'' The current language of 40 CFR 63.6(h)(1) exempts sources from opacity standards during periods of SSM. As discussed above, the court in *Sierra Club* vacated the exemptions contained in this provision and held that the CAA requires that some section 112 standard apply continuously. Consistent with *Sierra Club,* the EPA is proposing to revise standards in this rule to apply at all times.

d. Performance Testing

We are proposing to revise the 40 CFR part 63, subpart CC General Provisions table (Table 6) entry for 63.7(e)(1) by changing the ''Yes'' in the second column to a ''No.'' Similarly, we are proposing to revise the 40 CFR part 63, subpart UUU General Provisions table (Table 44) entry for § 63.7(e)(1) by changing the ''Yes'' in the third column to a ''No.'' Section 63.7(e)(1) describes performance testing requirements. The EPA is instead proposing to add performance testing requirements at 40 CFR 63.642(d)(3) and 40 CFR 63.1571(b)(1). The performance testing requirements we are proposing differ from the General Provisions performance testing provisions in several respects. The regulatory text does not include the language in 40 CFR 63.7(e)(1) that restated the SSM exemption. The regulatory text also does not preclude startup and shutdown periods from being considered ''representative'' for purposes of performance testing, however, the testing. However, the specific testing provisions proposed at 40 CFR 63.642(d)(3) and 40 CFR 63.1571(b)(1) do not allow performance testing during startup or shutdown. As in 40 CFR 63.7(e)(1), performance tests conducted under this subpart may not be conducted during malfunctions because conditions during malfunctions are often not representative of normal operating conditions. The EPA is proposing to add language that requires the owner or operator to record the process information that is necessary to document operating conditions during the test and include in such record an explanation to support that such conditions represent normal operation. Section 63.7(e) requires that the owner or operator make available to the Administrator such records ''as may be necessary to determine the condition of the performance test'' available to the Administrator upon request, but does not specifically require the information to be recorded. The regulatory text EPA is proposing to add to Refinery MACT 1 and 2 builds on that requirement and makes explicit the requirement to record the information.

e. Monitoring

We are proposing to revise the 40 CFR part 63, subpart CC General Provisions table (Table 6) entries for 63.8(c)(1)(i) and 63.8(c)(1)(iii) by changing the ''Yes'' in the second column to a ''No.'' Similarly, we are proposing to revise the 40 CFR part 63, subpart UUU General Provisions table (Table 44) entry for § 63.8(c)(1)(i) and § 63.8(c)(1)(iii) by changing the ''Yes'' in the third column to a ''No.'' The cross-references to the general duty and SSM plan requirements in those subparagraphs are not necessary in light of other requirements of 40 CFR 63.8 that require good air pollution control practices (40 CFR 63.8(c)(1)) and that set out the requirements of a quality control program for monitoring equipment (40 CFR 63.8(d)).

We are proposing to revise the 40 CFR part 63, subpart UUU General Provisions table (Table 44) entry for § 63.8(d) to include separate entries for specific paragraphs of 40 CFR 63.8(d), including an entry for § 63.10(d)(3) with ''No'' in the third column. The final sentence in 40 CFR 63.8(d)(3) refers to the General Provisions' SSM plan requirement which is no longer applicable. The EPA is proposing to add to the rule at 40 CFR 63.1576(b)(3) text that is identical to 40 CFR 63.8(d)(3) except that the final sentence is replaced with the following sentence: ''The program of corrective action should be included in the plan required under § 63.8(d)(2).''

f. Recordkeeping

We are proposing to revise the 40 CFR part 63, subpart CC General Provisions table (Table 6) entry for 63.10(b)(2)(i) by changing the ''Yes'' in the second column to a ''No.'' Section 63.10(b)(2)(i) describes the recordkeeping requirements during startup and shutdown. These recording provisions are no longer necessary because the EPA is proposing that recordkeeping and reporting applicable to normal operations will apply to startup and shutdown. In the absence of special provisions applicable to startup and shutdown, such as a startup and shutdown plan, there is no reason to retain additional recordkeeping for startup and shutdown periods.

We are proposing to revise the 40 CFR part 63, subpart UUU General Provisions table (Table 44) entry for § 63.10(b) to include separate entries for specific paragraphs of 40 CFR 63.10(b), including an entry for § 63.10(b)(2)(i) with ''No'' in the third column. Section 63.10(b)(2)(i) describes the recordkeeping requirements during startup and shutdown. We are instead proposing to add recordkeeping requirements to 40 CFR 63.1576(a)(2). When a source is subject to a different standard during startup and shutdown, it will be important to know when such startup and shutdown periods begin and end in order to determine compliance with the appropriate standard. Thus, the EPA is proposing to add language to 40 CFR 63.1576(a)(2) requiring that sources subject to an emission standard during startup or shutdown that differs from the emission standard that applies at all other times must record the date, time, and duration of such periods.

We are proposing to revise the 40 CFR part 63, subpart CC General Provisions table (Table 6) entry for 63.10(b)(2)(ii) by changing the ''Yes'' in the second column to a ''No.'' Similarly, we are proposing to revise the 40 CFR part 63,

subpart UUU General Provisions table (Table 44) entry for § 63.10(b) to include separate entries for specific paragraphs of 40 CFR 63.10(b), including an entry for § 63.10(b)(2)(ii) with ''No'' in the third column. Section 63.10(b)(2)(ii) describes the recordkeeping requirements during a malfunction. The EPA is proposing to add such requirements to 40 CFR 63.655(i)(11) and 40 CFR 63.1576(a)(2). The regulatory text we are proposing to add differs from the General Provisions language that was cross-referenced, which provides the creation and retention of a record of the occurrence and duration of each malfunction of process, air pollution control, and monitoring equipment. The proposed text would apply to any failure to meet an applicable standard and would require the source to record the date, time, and duration of the failure. The EPA is also proposing to add to 40 CFR 63.655(i)(11) and 40 CFR 63.1576(a)(2) a requirement that sources keep records that include a list of the affected source or equipment and actions taken to minimize emissions, an estimate of the quantity of each regulated pollutant emitted over the standard for which the source failed to meet a standard, and a description of the method used to estimate the emissions. Examples of such methods would include product-loss calculations, mass balance calculations, measurements when available, or engineering judgment based on known process parameters. The EPA is proposing to require that sources keep records of this information to ensure that there is adequate information to allow the EPA to determine the severity of any failure to meet a standard, and to provide data that may document how the source met the general duty to minimize emissions when the source has failed to meet an applicable standard.

We are proposing to revise the 40 CFR part 63, subpart CC General Provisions table (Table 6) entry for 63.10(b)(2)(iv) by changing the ''Yes'' in the second column to a ''No.'' Similarly, we are proposing to revise the 40 CFR part 63, subpart UUU General Provisions table (Table 44) entry for § 63.10(b) to include separate entries for specific paragraphs of 40 CFR 63.10(b), including an entry for § 63.10(b)(2)(iv)–(v) with ''No'' in the third column. When applicable, 40 CFR 63.10(b)(2)(iv) requires sources to record actions taken during SSM events when actions were inconsistent with their SSM plan. The requirement is no longer appropriate because SSM plans will no longer be required. The requirement previously applicable under 40 CFR 63.10(b)(2)(iv)(B) to record actions to minimize emissions and record corrective actions is now applicable by reference to 40 CFR 63.655(i)(11)(iii) and 40 CFR 63.1576(a)(2)(iii).

We are proposing to revise the 40 CFR part 63, subpart CC General Provisions table (Table 6) entry for 63.10(b)(2)(v) by changing the ''Yes'' in the second column to a ''No.'' Similarly, we are proposing to revise the 40 CFR part 63, subpart UUU General Provisions table (Table 44) entry for § 63.10(b) to include separate entries for specific paragraphs of 40 CFR 63.10(b), including an entry for § 63.10(b)(2)(iv)–(v) with ''No'' in the third column. When applicable, 40 CFR 63.10(b)(2)(v) requires sources to record actions taken during SSM events to show that actions taken were consistent with their SSM plan. The requirement is no longer appropriate because SSM plans would no longer be required.

We are proposing to revise the 40 CFR part 63, subpart UUU General Provisions table (Table 44) entry for § 63.10(c)(9)–(15) to include separate entries for specific paragraphs of 40 CFR 63.10(c), including an entry for § 63.10(c)(15) with ''No'' in the third column. The EPA is proposing that 40 CFR 63.10(c)(15) no longer apply. When applicable, the provision allows an owner or operator to use the affected source's SSM plan or records kept to satisfy the recordkeeping requirements of the SSM plan, specified in 40 CFR 63.6(e), to also satisfy the requirements of 40 CFR 63.10(c)(10) through (12). The EPA is proposing to eliminate this requirement because SSM plans would no longer be required, and therefore 40 CFR 63.10(c)(15) no longer serves any useful purpose for affected units.

g. Reporting

We are proposing to revise the 40 CFR part 63, subpart CC General Provisions table (Table 6) entries for 63.10(d)(5)(i) and 63.10(d)(5)(ii) by combining them into one entry for 63.10(d)(5) with a ''No'' in the second column. Similarly, we are proposing to revise the 40 CFR part 63, subpart UUU General Provisions table (Table 44) entries for 63.10(d)(5)(i) and 63.10(d)(5)(ii) by combining them into one entry for 63.10(d)(5) with a ''No'' in the third column. Section 63.10(d)(5) describes the reporting requirements for startups, shutdowns, and malfunctions. To replace the General Provisions reporting requirement, the EPA is proposing to add reporting requirements to 40 CFR 63.655(g)(12), 40 CFR 63.1575(c)(4), 40 CFR 63.1575(d), and 40 CFR 63.1575(e). The General Provisions requirement that was cross-referenced requires periodic SSM reports as a stand-alone report. In its place, we are proposing language that requires sources that fail to meet an applicable standard at any time to report the information concerning such events in the periodic report already required under each of these rules. We are proposing that the report must contain the number, date, time, duration, and the cause of such events (including unknown cause, if applicable), a list of the affected source or equipment, an estimate of the quantity of each regulated pollutant emitted over any emission limit, and a description of the method used to estimate the emissions.

Examples of methods that can be used to estimate emissions would include product-loss calculations, mass balance calculations, measurements when available, or engineering judgment based on known process parameters. The EPA is proposing this requirement to ensure that there is adequate information to determine compliance, to allow the EPA to determine the severity of the failure to meet an applicable standard, and to provide data that may document how the source met the general duty to minimize emissions during a failure to meet an applicable standard.

We will no longer require owners or operators to determine whether actions taken to correct a malfunction are consistent with an SSM plan, because SSM plans would no longer be required. The proposed rule eliminates the cross-reference to 40 CFR 63.10(d)(5)(i) that contains the description of the previously required SSM report format and submittal schedule from this section. These specifications are no longer necessary because the events will be reported in otherwise required reports with similar format and submittal requirements.

As noted above, we are proposing to revise the 40 CFR part 63, subpart CC General Provisions table (Table 6) entries for 63.10(d)(5)(i) and 63.10(d)(5)(ii) by combining them into one entry for 63.10(d)(5) with a ''No'' in the second column. Similarly, we are proposing to revise the 40 CFR part 63, subpart UUU General Provisions table (Table 44) entries for 63.10(d)(5)(i) and 63.10(d)(5)(ii) by combining them into one entry for 63.10(d)(5) with a ''No'' in the third column. Section 63.10(d)(5)(ii) describes an immediate report for startups, shutdown, and malfunctions when a source fails to meet an applicable standard but does not follow the SSM plan. We are proposing to no longer require owners and operators to report when actions taken during a startup, shutdown, or malfunction were not consistent with an SSM plan,

because such plans would no longer be required.

2. Electronic Reporting

In this proposal, the EPA is describing a process to increase the ease and efficiency of performance test data submittal while improving data accessibility. Specifically, the EPA is proposing that owners and operators of petroleum refineries submit electronic copies of required performance test and performance evaluation reports by direct computer-to-computer electronic transfer using EPA-provided software. The direct computer-to-computer electronic transfer is accomplished through the EPA's Central Data Exchange (CDX) using the Compliance and Emissions Data Reporting Interface (CEDRI). The CDX is EPA's portal for submittal of electronic data. The EPA-provided software is called the Electronic Reporting Tool (ERT) which is used to generate electronic reports of performance tests and evaluations. The ERT generates an electronic report package which will be submitted using the CEDRI. The submitted report package will be stored in the CDX archive (the official copy of record) and the EPA's public database called WebFIRE. All stakeholders will have access to all reports and data in WebFIRE and accessing these reports and data will be very straightforward and easy (see the WebFIRE Report Search and Retrieval link at *http://cfpub.epa.gov/webfire/index.cfm?action=fire.searchERTSubmission*). A description and instructions for use of the ERT can be found at *http://www.epa.gov/ttn/chief/ert/index.html* and CEDRI can be accessed through the CDX Web site (*www.epa.gov/cdx*). A description of the WebFIRE database is available at: *http://cfpub.epa.gov/oarweb/index.cfm?action=fire.main.*

The proposal to submit performance test data electronically to the EPA applies only to those performance tests (and/or performance evaluations) conducted using test methods that are supported by the ERT. The ERT supports most of the commonly used EPA reference methods. A listing of the pollutants and test methods supported by the ERT is available at: *http://www.epa.gov/ttn/chief/ert/index.html.*

We believe that industry would benefit from this proposed approach to electronic data submittal. Specifically, by using this approach, industry will save time in the performance test submittal process. Additionally, the standardized format that the ERT uses allows sources to create a more complete test report resulting in less time spent on data backfilling if a source failed to include all data elements required to be submitted. Also through this proposal industry may only need to submit a report once to meet the requirements of the applicable subpart because stakeholders can readily access these reports from the WebFIRE database. This also benefits industry by cutting back on recordkeeping costs as the performance test reports that are submitted to the EPA using CEDRI are no longer required to be retained in hard copy, thereby reducing staff time needed to coordinate these records.

Since the EPA will already have performance test data in hand, another benefit to industry is that fewer or less substantial data collection requests in conjunction with prospective required residual risk assessments or technology reviews will be needed. This would result in a decrease in staff time needed to respond to data collection requests.

State, local and tribal air pollution control agencies (S/L/Ts) may also benefit from having electronic versions of the reports they are now receiving. For example, S/L/Ts may be able to conduct a more streamlined and accurate review of electronic data submitted to them. For example, the ERT would allow for an electronic review process, rather than a manual data assessment, therefore, making review and evaluation of the source provided data and calculations easier and more efficient. In addition, the public stands to benefit from electronic reporting of emissions data because the electronic data will be easier for the public to access. How the air emissions data are collected, accessed and reviewed will be more transparent for all stakeholders.

One major advantage of the proposed submittal of performance test data through the ERT is a standardized method to compile and store much of the documentation required to be reported by this rule. The ERT clearly states what testing information would be required by the test method and has the ability to house additional data elements that might be required by a delegated authority.

In addition the EPA must have performance test data to conduct effective reviews of CAA sections 111 and 112 standards, as well as for many other purposes including compliance determinations, emission factor development and annual emission rate determinations. In conducting these required reviews, the EPA has found it ineffective and time consuming, not only for us, but also for regulatory agencies and source owners and operators, to locate, collect and submit performance test data. In recent years, stack testing firms have typically collected performance test data in electronic format, making it possible to move to an electronic data submittal system that would increase the ease and efficiency of data submittal and improve data accessibility.

A common complaint heard from industry and regulators is that emission factors are outdated or not representative of a particular source category. With timely receipt and incorporation of data from most performance tests, the EPA would be able to ensure that emission factors, when updated, represent the most current range of operational practices. Finally, another benefit of the proposed data submittal to WebFIRE electronically is that these data would greatly improve the overall quality of existing and new emissions factors by supplementing the pool of emissions test data for establishing emissions factors.

In summary, in addition to supporting regulation development, control strategy development and other air pollution control activities, having an electronic database populated with performance test data would save industry, state, local and tribal agencies and the EPA significant time, money and effort while also improving the quality of emission inventories and air quality regulations.

In addition, we are proposing that the fenceline data at each monitor location (as proposed above) would be reported electronically on a semiannual basis. All data reported electronically would be submitted to CDX through CEDRI and made available to the public.

3. Technical Amendments to Refinery MACT 1 and 2

a. Open-Ended Valves and Lines

Refinery MACT 1 requires an owner or operator to control emissions from equipment leaks according to the requirements of either 40 CFR part 60, subpart VV or 40 CFR part 63, subpart H. For open-ended valves and lines, both subparts require that the open end be equipped with a cap, blind flange, plug or second valve that ''shall seal the open end at all times.'' However, neither subpart defines ''seal'' or explains in practical and enforceable terms what constitutes a sealed open-ended valve or line. This has led to uncertainty on the part of the owner or operator as to whether compliance is being achieved. Inspections under the EPA's Air Toxics LDAR initiative have provided evidence that while certain open-ended lines may be equipped with a cap, blind flange, plug or second valve, they are not

operating in a ''sealed'' manner as the EPA interprets that term.

In response to this uncertainty, we are proposing to amend 40 CFR 63.648 to clarify what is meant by ''seal.'' This proposed amendment clarifies that, for the purpose of complying with the requirements of 40 CFR 63.648, open-ended valves and lines are ''sealed'' by the cap, blind flange, plug, or second valve when there are no detectable emissions from the open-ended valve or line at or above an instrument reading of 500 ppm. We solicit comment on this approach to reducing the compliance uncertainty associated with open-ended valves and lines and our proposed amendment.

b. General Provisions Cross-Referencing

We have reviewed the application of 40 CFR part 63, subpart A (General Provisions) to Refinery MACT 2. The applicable requirements of 40 CFR part 63, subpart A are contained in Table 44 of 40 CFR part 63, subpart UUU. As a result of our review, we are proposing several amendments to Table 44 of 40 CFR part 63, subpart UUU (in addition to those discussed in section IV.E.1 of this preamble that address SSM) to bring the table up-to-date with requirements of the General Provisions that have been amended since this table was created, to correct cross-references, and to incorporate additional sections of the General Provisions that are necessary to implement other subparts that are cross-referenced by this rule.

Although we reviewed the application of the General Provisions to Refinery MACT 1 and amended Table 6 of 40 CFR part 63, subpart CC in 2009, we are proposing a few additional technical corrections to this table (in addition to those discussed in section IV.E.1 of this preamble that address SSM). We are not discussing the details of these proposed technical corrections in this preamble but the rationale for each change to Table 6 of 40 CFR part 63, subpart CC and Table 44 of 40 CFR part 63, subpart UUU (including the proposed amendments to address SSM discussed above), is included in Docket ID Number EPA–HQ–OAR–2010–0682.

4. Amendments to Refinery NSPS J and Ja

As discussed in section II.B.2 of this preamble, we are addressing a number of technical corrections and clarifications for Refinery NSPS J and Ja to address some of the issues raised in the petition for reconsideration and to improve consistency and clarity of the rule requirements. These issues are addressed in detail in API's amended petition, dated August 21, 2008 (see Docket Item Number EPA–HQ–OAR–2007–0011–0246) and the meeting minutes for a September 11, 2008 meeting between EPA and API (see Docket Item Number EPA–HQ–OAR–2007–0011–0266).

a. The Depressurization Work Practice Standard for Delayed Coking Units

HOVENSA and the Industry Petitioners raised several issues with the analysis conducted to support the DCU work practice standard in Refinery NSPS Ja. With the promulgation and implementation of the standards we are proposing for the DCU under Refinery MACT 1, the DCU work practice standards in Refinery NSPS Ja are not expected to result in any further decreases in emissions from the DCU. Any DCU that becomes subject to Refinery NSPS Ja would already be in compliance with Refinery MACT 1, which is a more stringent standard than the DCU work practice standards in Refinery NSPS Ja. As such, we are contemplating various ideas for harmonizing the requirements for the DCU in these two regulations. One option is to amend Refinery NSPS Ja to incorporate the same requirements being proposed for Refinery MACT 1 (the DCU work practice standard in Refinery NSPS Ja is less stringent than the proposed requirements for Refinery MACT 1). Another option we are contemplating is deleting the DCU work practice standard within Refinery NSPS Ja once the DCU standards in Refinery MACT 1 are promulgated and fully implemented. We believe deletion of this work practice standard is consistent with the objectives of Executive Order 13563, ''Improving Regulation and Regulatory Review.'' We solicit comment on these options as well as any other comments regarding the interaction between the DCU requirements in these two rules (*i.e.,* the need to keep the DCU work practice standard in Refinery NSPS Ja after promulgation of these revisions to Refinery MACT 1.)

b. Technical Corrections and Clarifications

In addition to their primary issues, the Industry Petitioners enumerated several points of clarification and recommended amendments to Refinery NSPS J and Ja. These issues are addressed in detail in API's amended petition for reconsideration, dated August 21, 2008 (see Docket Item Number EPA–HQ–OAR–2007–0011–0246) and the meeting minutes for a September 11, 2008 meeting between EPA and API (see Docket Item Number EPA–HQ–OAR–2007–0011–0266). We are including several proposed amendments in this rulemaking to specifically address these issues. These amendments are discussed in the remainder of this section. We are addressing these issues now while we are proposing amendments for Refinery MACT 2 in an effort to improve consistency and clarity for sources regulated under both the NSPS and Refinery MACT 2.

We are proposing a series of amendments to the requirements for sulfur recovery plants in 40 CFR 60.102a, to clarify the applicable emission limits for different types of sulfur recovery plants based on whether oxygen enrichment is used. These amendments also clarify that emissions averaging across a group of emission points within a given sulfur recovery plant is allowed from each of the different types of sulfur recovery plants, and that emissions averaging is specific to the SO_2 or reduced sulfur standards (and not to the H_2S limit). The 10 ppmv H_2S limit for reduction control systems not followed by incineration must be met on a release point-specific basis. These amendments are being made to clarify the original intent of the Refinery NSPS Ja requirements for sulfur recovery plants.

We are proposing a series of corresponding amendments in 40 CFR 60.106a to clarify the monitoring requirements, particularly when oxygen enrichment or emissions averaging is used. The monitoring requirements in Refinery NSPS Ja were incomplete for these provisions and did not specify all of the types of monitoring devices needed for implementation. We are also proposing in 40 CFR 60.106a to use the term ''reduced sulfur compounds'' when referring to the emission limits and monitoring devices needed to comply with the reduced sulfur compound emission limits for sulfur recovery plants with reduction control systems not followed by incineration. The term ''reduced sulfur compounds'' is a defined term in Refinery NSPS Ja, and the emissions limit for sulfur recovery plants with reduction control systems not followed by incineration is specific to ''reduced sulfur compounds.'' Therefore, the proposed amendments to the monitoring provisions provide clarification of the requirements by using a consistent, defined term.

We are proposing amendments to 40 CFR 60.102a(g)(1) to clarify that CO boilers, while part of the FCCU affected facility, can also be fuel gas combustion devices (FGCD). Industry Petitioners suggested that the CO boiler should only be subject to the FCCU NO_X and SO_2

limits and should not be considered a FGCD. While Refinery NSPS Ja clearly states that the coke burn-off exhaust from the FCCU catalyst regenerator is not considered to be fuel gas, other fuels combusted in the CO boiler must meet the H_2S concentration requirements for fuel gas like any other FGCD. This amendment is provided to clarify our original intent with respect to fuel gas. Industry Petitioners also noted that some CO boiler ''furnaces'' may be used as process heaters rather than steam-generating boilers. While we did not originally contemplate that CO furnaces would be used as process heaters, available data from the detailed ICR suggests that there are a few CO furnaces used as process heaters. These CO furnaces are all forced-draft process heaters, and the newly amended NO_X emissions limit in Refinery NSPS Ja for forced-draft process heaters is 60 ppmv, averaged over a 30-day period. Given the longer averaging time of the process heater NO_X limits, these two emission limits (for FCCU NO_X and for process heater NO_X) are reasonably comparable and are not expected to result in a significant difference in the control systems selected for compliance. As such, we are not amending or clarifying the NO_X standards for the FCCU or process heaters at this time. We are, however, clarifying (through this response) that if an emission source meets the definition of more than one affected facility, that source would need to comply with all requirements applicable to the emissions source.

We are proposing to revise the annual testing requirement in 40 CFR 60.104a(b) to clarify our original intent. Instead of requiring a PM performance test at least once every 12 months, the rule would require a PM performance test annually and specify that annually means once per calendar year, with an interval of at least 8 months but no more than 16 months between annual tests. This provision will ensure that testing is conducted at a reasonable interval while giving owners and operators flexibility in scheduling the testing. We are also proposing to amend 40 CFR 60.104a(f) to clarify that the provisions of that paragraph are specific to owners or operators of an FCCU or FCU that use a cyclone to comply with the PM per coke burn-off emissions limit (rather than just the PM limit) in 40 CFR 60.102a(b)(1), to clarify that facilities electing to comply with the concentration limit using a PM CEMS would not also be required to install a COMS. We are also proposing to amend 40 CFR 60.104a(j) to delete the requirements to measure flow for the H_2S concentration limit for fuel gas, as these are not needed in the performance evaluation.

We are proposing amendments to 40 CFR 60.105a(b)(1)(ii)(A) to require corrective action be completed to repair faulty (leaking or plugged) air or water lines within 12 hours of identification of an abnormal pressure reading during the daily checks. We are also proposing amendments to 40 CFR 60.105a(i) to include periods when abnormal pressure readings for a jet ejector-type wet scrubber (or other type of wet scrubber equipped with atomizing spray nozzles) are not corrected within 12 hours of identification, and periods when a bag leak detection system alarm (for a fabric filter) is not alleviated within the time period specified in the rule. These proposed amendments are necessary so that periods when the APCD operation is compromised are properly managed and/or reported.

We are proposing amendments to 40 CFR 60.105(b)(1)(iv) and 60.107a(b)(1)(iv) to allow using tubes with a maximum span between 10 and 40 ppmv, inclusive, when $1 \leq N \leq 10$, where N = number of pump strokes rather than requiring use of tubes with ranges 0–10/0–100 ppm (N = 10/1) because different length-of-stain tube manufacturers have different span ranges, and none of the commercially-available tubes have a specific span of 0–10/0–100 ppm (N = 10/1). We are also proposing to amend 40 CFR 60.105(b)(3)(iii) and 40 CFR 60.107a(b)(3)(iii) to specify that the temporary daily stain sampling must be made using length-of stain tubes with a maximum span between 200 and 400 ppmv, inclusive, when $1 \leq N \leq 5$, where N = number of pump strokes. This proposed amendment clarifies this monitoring requirement, ensures the proper tube range is used, and provides some flexibility in span range to accommodate different manufacturers of the length-of-stain tubes. We also propose to delete the last sentence in 40 CFR 60.105(b)(3)(iii), as there is no long-term H_2S concentration limit in Refinery NSPS J.

We are proposing to clarify that flares are subject to the performance test requirements. We are also proposing to clarify those performance test requirements in 40 CFR 60.107a(e)(1)(ii) and 40 CFR 60.107a(e)(2)(ii) to remove the distinction between flares with or without routine flow. The term ''routine flow'' is not defined and it is difficult to make this distinction in practice.

F. What compliance dates are we proposing?

Amendments to Refinery MACT 1 and 2 proposed in this rulemaking for adoption under CAA section 112(d)(2) and (3) and CAA section 112(d)(6) are subject to the compliance deadlines outlined in the CAA under section 112(i). For all of the requirements we are proposing under CAA section 112(d)(2) and (3) or CAA section 112(d)(6) except for storage vessels, which we are also requiring under 112 (f)(2), we are proposing the following compliance dates. As provided in CAA section 112(i), new sources would be required to comply with these requirements by the effective date of the final amendments to Refinery MACT 1 and 2 or startup, whichever is later.

For existing sources, CAA section 112(i) provides that the compliance date shall be as expeditiously as practicable, but no later than 3 years after the effective date of the standard. In determining what compliance period is as expeditious as practicable, we consider the amount of time needed to plan and construct projects and change operating procedures. Under CAA section 112(d)(2) and (3), we are proposing new operating requirements for DCU. In order to comply with these new requirements, we project that most DCU owners or operators would need to install additional controls (*e.g.,* steam ejector systems). Similarly, the proposed revision in the CRU pressure limit exclusions would require operational changes and, in some cases, additional controls. The addition of new control equipment would require engineering design, solicitation and review of vendor quotes, contracting and installation of the equipment, which would need to be timed with process unit outage and operator training. Therefore, we are proposing that it is necessary to provide 3 years after the effective date of the final rule for these sources to comply with the DCU and CRU requirements.

We are proposing new operating and monitoring requirements for flares under CAA section 112(d)(2) and (3). We anticipate that these requirements would require the installation of new flare monitoring equipment and we project most refineries would install new control systems to monitor and adjust assist gas (air or steam) addition rates. Similar to the addition of new control equipment, these new monitoring requirements for flares would require engineering evaluations, solicitation and review of vendor quotes, contracting and installation of the equipment, and operator training.

Installation of new monitoring and control equipment on flares will require the flare to be taken out of service. Depending on the configuration of the flares and flare header system, taking the flare out of service may also require a significant portion of the refinery operations to be shut down. Therefore, we are proposing that it is necessary to provide 3 years after the effective date of the final rule for owners or operators to comply with the new operating and monitoring requirements for flares.

Under CAA section 112(d)(2) and (3), we are proposing new vent control requirements for bypasses. These requirements would typically require the addition of piping and potentially new control requirements. As these vent controls would most likely be routed to the flare, we are proposing to provide 3 years after the effective date of the final rule for owners or operators to afford coordination of these bypass modifications with the installation of the new monitoring equipment for the flares.

Under our technology review, we are proposing to require fenceline monitoring pursuant to CAA section 112(d)(6). These proposed provisions would require refinery owners or operators to install a number of monitoring stations around the facility fenceline. While the diffusive tube sampling system is relatively low-tech and is easy to install, site-specific factors must be considered in the placement of the monitoring systems. We also assume all refinery owners or operators would invest in the analytical equipment needed to perform automated sample analysis on-site and time is needed to select an appropriate vendor for this equipment. Furthermore, additional monitoring systems may be needed to account for near-field contributing sources, for which the development and approval of a site-specific monitoring plan. Considering all of the requirements needed to implement the fenceline monitoring system, we are proposing to provide 3 years from the effective date of the final rule for refinery owners or operators to install and begin collecting ambient air samples around the fenceline of their facility following an approved (if necessary) site-specific monitoring plan.

As a result of our technology review for equipment leaks, we are proposing to allow the use of optical gas imaging devices in lieu of using EPA Method 21 of 40 CFR part 60, Appendix A–7 without the annual compliance demonstration with EPA Method 21 as required in the AWP (see 73 FR 73202, December 22, 2008), provided that the owner and operator follows the provisions of Appendix K to 40 CFR part 60. Facilities could begin to comply with the optical gas imaging alternative as soon as Appendix K to 40 CFR part 60 is promulgated. Alternatively, as is currently provided in the AWP, the refinery owner or operator can elect to use the optical gas imaging monitoring option prior to installation and use of the fenceline monitoring system, provided they conduct an annual compliance demonstration using EPA Method 21 as required in the AWP.

Under our technology review for marine vessel loading operations, we are proposing to add a requirement for submerged filling for small and for offshore marine vessel loading operations. We anticipate that the submerged fill pipes are already in place on all marine vessels used to transport petroleum refinery liquids, so we are proposing that existing sources comply with this requirement on the effective date of the final rule. We request comment regarding the need to provide additional time to comply with the submerged filling requirement; please provide in your comment a description of the vessels loaded that do not already have a submerged fill pipe, how these vessels comply with (or are exempt from) the Coast Guard requirements at 46 CFR 153.282, and an estimate of the time needed to add the required submerged fill pipes to these vessels.

We are also proposing to require FCCU owners and operators currently subject to Refinery NSPS J (or electing that compliance option in Refinery MACT 2) to transition from the Refinery NSPS J option to one of the alternatives included in the proposed rule. We are also proposing altering the averaging times for some of the operating limits. A PM performance test is needed in order to establish these new operating limits prior to transitioning to the proposed requirements. Additionally, we are proposing that a PM performance test be conducted for each FCCU once every 5 years. We do not project any new control or monitoring equipment will be needed in order to comply with the proposed provisions; however, compliance with the proposed provisions is dependent on conducting a performance test. Establishing an early compliance date for the first performance test can cause scheduling issues as refinery owners or operators compete for limited number of testing contractors. Considering these scheduling issues, we propose to require the first performance test for PM and compliance with the new operating limits be completed no later than 18 months after the effective date of the final rule.

In this action, we are proposing revisions to the SSM provisions of Refinery MACT 1 and 2, including specific startup or shutdown standards for certain emission sources, and we are proposing electronic reporting requirements in Refinery MACT 1 and 2. The proposed monitoring requirements associated with the new startup and shutdown standards are expected to be present on the affected source, so we do not expect that owners or operators will need additional time to transition to these requirements. Similarly, the electronic reporting requirements are not expected to require a significant change in operation or equipment, so these requirements should be able to be implemented more quickly than those that require installation of new control or monitoring equipment. Based on our review of these requirements, we propose that these requirements become effective upon the effective date of the final rule.

Finally, we are proposing additional requirements for storage vessels under CAA sections 112(d)(6) and (f)(2). The compliance deadlines for standards developed under CAA section 112(f)(2) are delineated in CAA sections 112(f)(3) and (4). As provided in CAA section 112(f)(4), risk standards shall not apply to existing sources until 90 days after the effective date of the rule, but the Administrator may grant a waiver for a particular source for a period of up to 2 years after the effective date. While additional controls will be necessary to comply with the proposed new control and fitting requirements for storage vessels, the timing for installation of these controls is specified within the Generic MACT (40 CFR part 63, subpart WW). Therefore, we propose that these new requirements for storage vessels become effective 90 days following the effective date of the final rule.

V. Summary of Cost, Environmental and Economic Impacts

A. What are the affected sources, the air quality impacts and cost impacts?

The sources affected by significant amendments to the petroleum refinery standards include storage vessels, equipment leaks, fugitive emissions and DCU subject to Refinery MACT 1. The proposed amendments for other sources subject to one or more of the petroleum refinery standards are expected to have minimal air quality and cost impacts.

The total capital investment cost of the proposed amendments and standards is estimated at $239 million, $82.8 million from proposed amendments and $156 million from

standards to ensure compliance. We estimate annualized costs to be approximately $4.53 million, which includes an estimated $14.4 million credit for recovery of lost product and the annualized cost of capital. We also estimate annualized costs of the proposed standards to ensure compliance to be approximately $37.9 million. The proposed amendments would achieve a nationwide HAP emission reduction of 1,760 tpy, with a concurrent reduction in VOC emissions of 18,800 tpy. Table 13 of this preamble summarizes the cost and emission reduction impacts of the proposed amendments, and Table 14 of this preamble summarizes the costs of the proposed standards to ensure compliance.

TABLE 13—NATIONWIDE IMPACTS OF PROPOSED AMENDMENTS

Affected source	Total capital investment (million $)	Total annualized cost without credit (million $/yr)	Product recovery credit (million $/yr)	Total annualized costs (million $/yr)	VOC emission reductions (tpy)	Cost effectiveness ($/ton VOC)	HAP emission reductions (tpy)	Cost effectiveness ($/ton HAP)
Storage Vessels	18.5	3.13	(8.16)	(5.03)	14,600	(345)	910	(5,530)
Delayed Coking Units	52.0	10.2	(6.20)	3.98	4,250	937	850	4,680
Fugitive Emissions (Fenceline Monitoring)	12.2	5.58	.....	5.58	.....	.....	.....	.....
Total	82.8	18.9	(14.4)	4.53	18,800	241	1,760	2,570

TABLE 14—NATIONWIDE COSTS OF PROPOSED AMENDMENTS TO ENSURE COMPLIANCE

Affected source	Total capital investment (million $)	Total annualized cost without credit (million $/yr)	Product recovery credit (million $/yr)	Total annualized costs (million $/yr)
Relief Valve Monitoring	9.54	1.36	.....	1.36
Flare Monitoring	147	36.3	.....	36.3
FCCU Testing	—	0.21	.....	0.21
Total	156	37.9	—	37.9

Note that any corrective actions taken in response to the fenceline monitoring program are not included in the impacts shown in Table 13. Any corrective actions associated with fenceline monitoring will result in additional emission reductions and additional costs.

The impacts shown in Table 14 do not consider emission reductions associated with relief valve or flare monitoring provisions or emission reductions that may occur as a result of the additional FCCU testing requirements. The proposed operational and monitoring requirements for flares at refineries have the potential to reduce excess emissions from flares by approximately 3,800 tpy of HAP, 33,000 tpy of VOC, and 327,000 metric tonnes per year of CO_2e. When added to the reductions in CO_2e achieved from proposed controls on DCU, these proposed amendments are projected to result in reductions of 670,000 metric tonnes of CO_2e due to reductions of methane emissions.[42]

[42] The flare operational and monitoring requirements are projected to reduce methane emissions by 29,500 tpy while increasing CO_2 emissions by 260,000 tpy, resulting in a net GHG reduction of 327,000 metric tonnes per year of CO_2e, assuming a global warming potential of 21 for methane. Combined with methane emissions reduction of 18,000 tpy from the proposed controls on DCU, the overall GHG reductions of the proposed amendments is 670,000 metric tonnes per year of CO_2e assuming a global warming potential of 21 for methane.

B. What are the economic impacts?

We performed a national economic impact analysis for petroleum product producers. All petroleum product refiners will incur annual compliance costs of much less than 1 percent of their sales. For all firms, the minimum cost-to-sales ratio is <0.01 percent; the maximum cost-to-sales ratio is 0.87 percent; and the mean cost-to-sales ratio is 0.03 percent. Therefore, the overall economic impact of this proposed rule should be minimal for the refining industry and its consumers.

In addition, the EPA performed a screening analysis for impacts on small businesses by comparing estimated annualized engineering compliance costs at the firm-level to firm sales. The screening analysis found that the ratio of compliance cost to firm revenue falls below 1 percent for the 28 small companies likely to be affected by the proposal. For small firms, the minimum cost-to-sales ratio is <0.01 percent; the maximum cost-to-sales ratio is 0.62 percent; and the mean cost-to-sales ratio is 0.07 percent.

More information and details of this analysis are provided in the technical document *Economic Impact Analysis for Petroleum Refineries Proposed Amendments to the National Emissions Standards for Hazardous Air Pollutants,* which is available in the docket for this proposed rule (Docket ID Number EPA–HQ–OAR–2010–0682).

C. What are the benefits?

The proposed rule is anticipated to result in a reduction of 1,760 tons of HAP (based on allowable emissions under the MACT standards) and 18,800 tons of VOC emissions per year, not including potential emission reductions that may occur as a result of the proposed provisions for flares or fenceline monitoring. These avoided emissions will result in improvements in air quality and reduced negative health effects associated with exposure to air pollution of these emissions; however, we have not quantified or monetized the benefits of reducing these emissions for this rulemaking.

VI. Request for Comments

We solicit comments on all aspects of this proposed action. In addition to general comments on this proposed action, we are also interested in additional data that may improve the risk assessments and other analyses. We are specifically interested in receiving any improvements to the data used in the site-specific emissions profiles used for risk modeling. Such data should include supporting documentation in sufficient detail to allow characterization of the quality and representativeness of the data or information. Section VII of this preamble provides more information on submitting data.

VII. Submitting Data Corrections

The site-specific emissions profiles used in the source category risk and demographic analyses and instructions are available on the RTR Web page at: *http://www.epa.gov/ttn/atw/rrisk/rtrpg.html*. The data files include detailed information for each HAP emissions release point for the facilities in the source categories.

If you believe that the data are not representative or are inaccurate, please identify the data in question, provide your reason for concern and provide any ''improved'' data that you have, if available. When you submit data, we request that you provide documentation of the basis for the revised values to support your suggested changes. To submit comments on the data downloaded from the RTR page, complete the following steps:

1. Within this downloaded file, enter suggested revisions to the data fields appropriate for that information.
2. Fill in the commenter information fields for each suggested revision (*i.e.,* commenter name, commenter organization, commenter email address, commenter phone number and revision comments).
3. Gather documentation for any suggested emissions revisions (*e.g.,* performance test reports, material balance calculations).
4. Send the entire downloaded file with suggested revisions in Microsoft® Access format and all accompanying documentation to Docket ID Number EPA–HQ–OAR–2010–0682 (through one of the methods described in the **ADDRESSES** section of this preamble).
5. If you are providing comments on a single facility or multiple facilities, you need only submit one file for all facilities. The file should contain all suggested changes for all sources at that facility. We request that all data revision comments be submitted in the form of updated Microsoft® Excel files that are generated by the Microsoft® Access file. These files are provided on the RTR Web page at: *http://www.epa.gov/ttn/atw/rrisk/rtrpg.html*.

VIII. Statutory and Executive Order Reviews

A. Executive Order 12866: Regulatory Planning and Review and Executive Order 13563: Improving Regulation and Regulatory Review

Under Executive Order 12866 (58 FR 51735, October 4, 1993), this action is a ''significant regulatory action'' because it raises novel legal and policy issues. Accordingly, the EPA submitted this action to the Office of Management and Budget (OMB) for review under Executive Orders 12866 and 13563 (76 FR 3821, January 21, 2011) and any changes made in response to OMB recommendations have been documented in the docket for this action (Docket ID Number EPA–HQ–OAR–2010–0682).

B. Paperwork Reduction Act

The information collection requirements in this rule have been submitted for approval to OMB under the Paperwork Reduction Act, 44 U.S.C. 3501, *et seq.*

Revisions and burden associated with amendments to 40 CFR part 63, subparts CC and UUU are discussed in the following paragraphs. OMB has previously approved the information collection requirements contained in the existing regulations in 40 CFR part 63, subparts CC and UUU under the provisions of the Paperwork Reduction Act, 44 U.S.C. 3501, *et seq.,* OMB control numbers for the EPA's regulations in 40 CFR are listed in 40 CFR part 9. Burden is defined at 5 CFR 1320.3(b).

The ICR document prepared by the EPA for the amendments to the Petroleum Refinery MACT standards for 40 CFR part 63, subpart CC has been assigned the EPA ICR number 1692.08. Burden changes associated with these amendments would result from new monitoring, recordkeeping and reporting requirements. The estimated annual increase in recordkeeping and reporting burden hours is 53,619 hours; the frequency of response is semiannual for all reports for all respondents that must comply with the rule's reporting requirements; and the estimated average number of likely respondents per year is 95 (this is the average in the second year). The cost burden to respondents resulting from the collection of information includes the total capital cost annualized over the equipment's expected useful life (about $17 million, which includes monitoring equipment for bypass valves, fenceline monitoring, relief valves, and flares), a total operation and maintenance component (about $16 million per year for fenceline and flare monitoring), and a labor cost component (about $4.5 million per year, the cost of the additional 53,619 labor hours). An agency may not conduct or sponsor (and a person is not required to respond to) a collection of information unless it displays a currently-valid OMB control number.

The ICR document prepared by the EPA for the amendments to the Petroleum Refinery MACT standards for 40 CFR part 63, subpart UUU has been assigned the EPA ICR number 1844.07. Burden changes associated with these amendments would result from new testing, recordkeeping and reporting requirements being proposed with this action. The estimated average burden per response is 26 hours; the frequency of response is both once and every 5 years for respondents that have FCCU, and the estimated average number of likely respondents per year is 67. The cost burden to respondents resulting from the collection of information includes the performance testing costs (approximately $356,000 per year over the first 3 years for the initial performance test and $213,000 per year starting in the fourth year), and a labor cost component (approximately $238,000 per year for 2,860 additional labor hours). An agency may not conduct or sponsor (and a person is not required to respond to) a collection of information unless it displays a currently-valid OMB control number.

To comment on the agency's need for this information, the accuracy of the provided burden estimates, and any suggested methods for minimizing respondent burden, the EPA has established a public docket for this rule, which includes the ICR, under Docket ID Number EPA–HQ–OAR–2010–0682. Submit any comments related to the ICR to the EPA and OMB. See the **ADDRESSES** section at the beginning of this preamble for where to submit comments to the EPA. Send comments to OMB at the Office of Information and Regulatory Affairs, Office of Management and Budget, 725 17th Street NW., Washington, DC 20503, Attention: Desk Office for the EPA. Since OMB is required to make a decision concerning the ICR between 30 and 60 days after June 30, 2014, a comment to OMB is best assured of having its full effect if OMB receives it by July 30, 2014. The final rule will respond to any OMB or public comments on the information collection requirements contained in this proposal.

C. Regulatory Flexibility Act

The Regulatory Flexibility Act (RFA) generally requires an agency to prepare a regulatory flexibility analysis of any rule subject to notice and comment rulemaking requirements under the Administrative Procedure Act or any other statute, unless the agency certifies that the rule will not have a significant economic impact on a substantial number of small entities (SISNOSE). Small entities include small businesses, small organizations and small governmental jurisdictions. For purposes of assessing the impacts of this proposed rule on small entities, a small entity is defined as: (1) A small business in the petroleum refining industry

having 1,500 or fewer employees (Small Business Administration (SBA), 2011); (2) a small governmental jurisdiction that is a government of a city, county, town, school district or special district with a population of less than 50,000; and (3) a small organization that is any not-for-profit enterprise which is independently owned and operated and is not dominant in its field.

After considering the economic impacts of this proposed rule on small entities, I certify that this action will not have a significant economic impact on a substantial number of small entities. The small entities subject to the requirements of this proposed rule are small refiners. We have determined that 36 companies (59 percent of the 61 total) employ fewer than 1,500 workers and are considered to be small businesses. For small businesses, the average cost-to-sales ratio is about 0.05 percent, the median cost-to-sales ratio is 0.02 percent and the maximum cost-to-sales ratio is 0.55 percent. The potential costs do not have a more significant impact on small refiners and because no small firms are expected to have cost-to-sales ratios greater than 1 percent, we determined that the cost impacts for this rulemaking will not have a SISNOSE.

Although not required by the RFA to convene a Small Business Advocacy Review (SBAR) Panel; because the EPA has determined that this proposal would not have a significant economic impact on a substantial number of small entities, the EPA originally convened a panel to obtain advice and recommendations from small entity representatives potentially subject to this rule's requirements. The panel was not formally concluded; however, a summary of the outreach conducted and the written comments submitted by the small entity representatives can be found in the docket for this proposed rule (Docket ID Number EPA–HQ–OAR–2010–0682).

We continue to be interested in the potential impacts of the proposed rule on small entities and welcome comments on issues related to such impacts.

D. Unfunded Mandates Reform Act

This proposed rule does not contain a federal mandate under the provisions of Title II of the Unfunded Mandates Reform Act of 1995 (UMRA), 2 U.S.C. 1531–1538 that may result in expenditures of $100 million or more for state, local and tribal governments, in the aggregate, or the private sector in any one year. As discussed earlier in this preamble, these amendments result in nationwide costs of $42.4 million per year for the private sector. Thus, this proposed rule is not subject to the requirements of sections 202 or 205 of the UMRA.

This proposed rule is also not subject to the requirements of section 203 of UMRA because it contains no regulatory requirements that might significantly or uniquely affect small governments because it contains no requirements that apply to such governments and does not impose obligations upon them.

E. Executive Order 13132: Federalism

This rule does not have federalism implications. It will not have substantial direct effects on the states, on the relationship between the national government and the states, or on the distribution of power and responsibilities among the various levels of government, as specified in Executive Order 13132. None of the facilities subject to this action are owned or operated by state governments, and, because no new requirements are being promulgated, nothing in this proposal will supersede state regulations. Thus, Executive Order 13132 does not apply to this rule.

In the spirit of Executive Order 13132, and consistent with the EPA policy to promote communications between the EPA and state and local governments, the EPA specifically solicits comment on this proposed rule from state and local officials.

F. Executive Order 13175: Consultation and Coordination With Indian Tribal Governments

This action does not have tribal implications, as specified in Executive Order 13175 (65 FR 67249, November 9, 2000). It will not have substantial direct effects on tribal governments, on the relationship between the federal government and Indian tribes, or on the distribution of power and responsibilities between the federal government and Indian tribes as specified in Executive Order 13175. Thus, Executive Order 13175 does not apply to this action.

Although Executive Order 13175 does not apply to this action, the EPA consulted with tribal officials in developing this action. The EPA sent out letters to tribes nationwide to invite them to participate in a tribal consultation meeting and solicit their input on this rulemaking. The EPA conducted the tribal consultation meeting on December 14, 2011. Participants from eight tribes attended the meeting, but they were interested only in outreach, and none of the tribes had delegation for consultation. The EPA presented all the information prepared for the consultation and conducted a question and answer session where participants asked clarifying questions about the information that was presented and generally expressed their support of the rulemaking requirements.

The EPA specifically solicits additional comment on this proposed action from tribal officials.

G. Executive Order 13045: Protection of Children From Environmental Health Risks and Safety Risks

This action is not subject to Executive Order 13045 (62 FR 19885, April 23, 1997) because it is not economically significant as defined in Executive Order 12866, and because the agency does not believe the environmental health or safety risks addressed by this action present a disproportionate risk to children. This action's health and risk assessments are contained in sections III.A and B and sections IV.C and D of this preamble.

The public is invited to submit comments or identify peer-reviewed studies and data that assess effects of early life exposure to emissions from petroleum refineries.

H. Executive Order 13211: Actions Concerning Regulations That Significantly Affect Energy Supply, Distribution, or Use

This action is not a ''significant energy action'' as defined under Executive Order 13211 (66 FR 28355, May 22, 2001), because it is not likely to have significant adverse effect on the supply, distribution or use of energy. The overall economic impact of this proposed rule should be minimal for the refining industry and its consumers.

I. National Technology Transfer and Advancement Act

Section 12(d) of the National Technology Transfer and Advancement Act of 1995 (NTTAA), Public Law No. 104–113, 12(d) (15 U.S.C. 272 note) directs the EPA to use voluntary consensus standards (VCS) in its regulatory activities unless to do so would be inconsistent with applicable law or otherwise impractical. VCS are technical standards (*e.g.,* materials specifications, test methods, sampling procedures, and business practices) that are developed or adopted by VCS bodies. The NTTAA directs the EPA to provide Congress, through OMB, explanations when the agency decides not to use available and applicable VCS.

This proposed rulemaking involves technical standards. The EPA proposes to use ISO 16017–2, ''Air quality Sampling and analysis of volatile organic compounds in ambient air,

indoor air and workplace air by sorbent tube/thermal desorption/capillary gas chromatography Part 2: Diffusive sampling'' as an acceptable alternative to EPA Method 325A. This method is available at *http://www.iso.org*. This method was chosen because it meets the requirements of EPA Method 301 for equivalency, documentation and validation data for diffusive tube sampling.

The EPA welcomes comments on this aspect of the proposed rulemaking and, specifically, invites the public to identify potentially-applicable VCS and to explain why such standards should be used in this regulation.

J. Executive Order 12898: Federal Actions To Address Environmental Justice in Minority Populations and Low-Income Populations

Executive Order 12898 (59 FR 7629, February 16, 1994) establishes federal executive policy on environmental justice. Its main provision directs federal agencies, to the greatest extent practicable and permitted by law, to make environmental justice part of their mission by identifying and addressing, as appropriate, disproportionately high and adverse human health or environmental effects of their programs, policies and activities on minority populations and low-income populations in the United States.

The EPA has determined that this proposed rule will not have disproportionately high and adverse human health or environmental effects on minority, low-income or indigenous populations because it maintains or increases the level of environmental protection for all affected populations without having any disproportionately high and adverse human health or environmental effects on any population, including any minority, low-income or indigenous populations. Further, the EPA believes that implementation of the provisions of this rule will provide an ample margin of safety to protect public health of all demographic groups.

To examine the potential for any environmental justice issues that might be associated with the refinery source categories associated with today's proposed rule, we evaluated the percentages of various social, demographic and economic groups within the at-risk populations living near the facilities where these source categories are located and compared them to national averages. Our analysis of the demographics of the population with estimated risks greater than 1-in-1 million indicates potential disparities in risks between demographic groups, including the African American, Other and Multiracial, Hispanic, Below the Poverty Level, and Over 25 without a High School Diploma groups. In addition, the population living within 50 km of the 142 petroleum refineries has a higher percentage of minority, lower income and lower education persons when compared to the nationwide percentages of those groups. These groups stand to benefit the most from the emission reductions achieved by this proposed rulemaking, and this proposed rulemaking is projected to result in 1 million fewer people exposed to risks greater than 1-in-1 million.

The EPA defines ''Environmental Justice'' to include meaningful involvement of all people regardless of race, color, national origin or income with respect to the development, implementation and enforcement of environmental laws, regulations and policies. To promote meaningful involvement, the EPA conducted numerous outreach activities and discussions, including targeted outreach (such as conference calls and Webinars) to communities and environmental justice organizations. In addition, after the rule is proposed, the EPA will be conducting a webinar to inform the public about the proposed rule and to outline how to submit written comments to the docket. Further stakeholder and public input is expected through public comment and follow-up meetings with interested stakeholders.

List of Subjects

40 CFR Part 60

Environmental protection, Administrative practice and procedure, Air pollution control, Incorporation by reference, Intergovernmental relations, Reporting and recordkeeping requirements.

40 CFR Part 63

Environmental protection, Air pollution control, Hazardous substances, Incorporation by reference, Reporting and recordkeeping requirements, Volatile organic compounds.

Dated: May 15, 2014.

Gina McCarthy,

Administrator.

For the reasons stated in the preamble, title 40, chapter I, of the Code of Federal Regulations is proposed to be amended as follows:

PART 60—STANDARDS OF PERFORMANCE FOR NEW STATIONARY SOURCES

■ 1. The authority citation for part 60 continues to read as follows:

Authority: 42 U.S.C. 7401, *et seq.*

Subpart J—[AMENDED]

■ 2. Section 60.105 is amended by:

■ a. Revising paragraph (b)(1)(iv) and

■ b. Revising paragraph (b)(3)(iii) to read as follows:

§ 60.105 Monitoring of emissions and operations.

* * * * *

(b) * * *

(1) * * *

(iv) The supporting test results from sampling the requested fuel gas stream/system demonstrating that the sulfur content is less than 5 ppmv. Sampling data must include, at minimum, 2 weeks of daily monitoring (14 grab samples) for frequently operated fuel gas streams/systems; for infrequently operated fuel gas streams/systems, seven grab samples must be collected unless other additional information would support reduced sampling. The owner or operator shall use detector tubes (''length-of-stain tube'' type measurement) following the ''Gas Processors Association Standard 2377–86, Test for Hydrogen Sulfide and Carbon Dioxide in Natural Gas Using Length of Stain Tubes,'' 1986 Revision (incorporated by reference—see § 60.17), using tubes with a maximum span between 10 and 40 ppmv inclusive when $1 \leq N \leq 10$, where N = number of pump strokes, to test the applicant fuel gas stream for H_2S; and

* * * * *

(3) * * *

(iii) If the operation change results in a sulfur content that is outside the range of concentrations included in the original application and the owner or operator chooses not to submit new information to support an exemption, the owner or operator must begin H_2S monitoring using daily stain sampling to demonstrate compliance using length-of-stain tubes with a maximum span between 200 and 400 ppmv inclusive when $1 \leq N \leq 5$, where N = number of pump strokes. The owner or operator must begin monitoring according to the requirements in paragraphs (a)(1) or (a)(2) of this section as soon as practicable but in no case later than 180 days after the operation change. During daily stain tube sampling, a daily sample exceeding 162 ppmv is an

exceedance of the 3-hour H_2S concentration limit.

* * * * *

Subpart Ja—[AMENDED]

■ 3. Section 60.100a is amended by revising the first sentence of paragraph (b) to read as follows:

§ 60.100a Applicability, designation of affected facility, and reconstruction.

* * * * *

(b) Except for flares, the provisions of this subpart apply only to affected facilities under paragraph (a) of this section which either commence construction, modification or reconstruction after May 14, 2007, or elect to comply with the provisions of this subpart in lieu of complying with the provisions in subpart J of this part. * * *

■ 4. Section 60.101a is amended by:

■ a. Revising the definition of ''Corrective action''; and

■ b. Adding, in alphabetical order, a definition for ''Sour water'' to read as follows:

§ 60.101a Definitions.

* * * * *

Corrective action means the design, operation and maintenance changes that one takes consistent with good engineering practice to reduce or eliminate the likelihood of the recurrence of the primary cause and any other contributing cause(s) of an event identified by a root cause analysis as having resulted in a discharge of gases from an affected facility in excess of specified thresholds.

* * * * *

Sour water means water that contains sulfur compounds (usually H_2S) at concentrations of 10 parts per million by weight or more.

* * * * *

■ 5. Section 60.102a is amended by:

■ a. Revising paragraphs (b)(1)(i) and (iii);

■ b. Revising paragraph (f); and

■ c. Revising paragraph (g)(1).

The revisions read as follows:

§ 60.102a Emissions limitations.

* * * * *

(b) * * *

(1) * * *

(i) 1.0 gram per kilogram (g/kg) (1 pound (lb) per 1,000 lb) coke burn-off or, if a PM continuous emission monitoring system (CEMS) is used, 0.040 grain per dry standard cubic feet (gr/dscf) corrected to 0 percent excess air for each modified or reconstructed FCCU.

* * * * *

(iii) 1.0 g/kg (1 lb/1,000 lb) coke burn-off or, if a PM CEMS is used, 0.040 grain per dry standard cubic feet (gr/dscf) corrected to 0 percent excess air for each affected FCU.

* * * * *

(f) Except as provided in paragraph (f)(3), each owner or operator of an affected sulfur recovery plant shall comply with the applicable emission limits in paragraphs (f)(1) or (2) of this section.

(1) For a sulfur recovery plant with a design production capacity greater than 20 long tons per day (LTD), the owner or operator shall comply with the applicable emission limit in paragraphs (f)(1)(i) or (f)(1)(ii) of this section. If the sulfur recovery plant consists of multiple process trains or release points, the owner or operator shall comply with the applicable emission limit for each process train or release point individually or comply with the applicable emission limit in paragraphs (f)(1)(i) or (f)(1)(ii) of this section as a flow rate weighted average for a group of release points from the sulfur recovery plant provided that flow is monitored as specified in § 60.106a(a)(7); if flow is not monitored as specified in § 60.106a(a)(7), the owner or operator shall comply with the applicable emission limit in paragraphs (f)(1)(i) or (f)(1)(ii) of this section for each process train or release point individually. For a sulfur recovery plant with a design production capacity greater than 20 long LTD and a reduction control system not followed by incineration, the owner or operator shall also comply with the H_2S emission limit in paragraph (f)(1)(iii) of this section for each individual release point.

(i) For a sulfur recovery plant with an oxidation control system or a reduction control system followed by incineration, the owner or operator shall not discharge or cause the discharge of any gases into the atmosphere (SO_2) in excess of the emission limit calculated using Equation 1 of this section. For Claus units that use only ambient air in the Claus burner or that elect not to monitor O_2 concentration of the air/oxygen mixture used in the Claus burner or for non-Claus sulfur recovery plants, this SO_2 emissions limit is 250 ppmv (dry basis) at zero percent excess air.

$$E_{LS} = k_1 \times \left(-0.038 \times (\%O_2)^2 + 11.53 \times \%O_2 + 25.6\right) \qquad \text{(Eq. 1)}$$

Where:

E_{LS} = Emission limit for large sulfur recovery plant, ppmv (as SO_2, dry basis at zero percent excess air);

k_1 = Constant factor for emission limit conversion: k_1 = 1 for converting to the SO_2 limit for a sulfur recovery plant with an oxidation control system or a reduction control system followed by incineration and k_1 = 1.2 for converting to the reduced sulfur compounds limit for a sulfur recovery plant with a reduction control system not followed by incineration; and

$\%O_2$ = O_2 concentration of the air/oxygen mixture supplied to the Claus burner, percent by volume (dry basis). If only ambient air is used for the Claus burner or if the owner or operator elects not to monitor O_2 concentration of the air/oxygen mixture used in the Claus burner or for non-Claus sulfur recovery plants, use 20.9% for $\%O_2$.

(ii) For a sulfur recovery plant with a reduction control system not followed by incineration, the owner or operator shall not discharge or cause the discharge of any gases into the atmosphere containing reduced sulfur compounds in excess of the emission limit calculated using Equation 1 of this section. For Claus units that use only ambient air in the Claus burner or for non-Claus sulfur recovery plants, this reduced sulfur compounds emission limit is 300 ppmv calculated as ppmv SO_2 (dry basis) at 0-percent excess air.

(iii) For a sulfur recovery plant with a reduction control system not followed by incineration, the owner or operator shall not discharge or cause the discharge of any gases into the atmosphere containing hydrogen sulfide (H_2S) in excess of 10 ppmv calculated as ppmv SO_2 (dry basis) at zero percent excess air.

(2) For a sulfur recovery plant with a design production capacity of 20 LTD or less, the owner or operator shall comply with the applicable emission limit in paragraphs (f)(2)(i) or (f)(2)(ii) of this section. If the sulfur recovery plant consists of multiple process trains or release points, the owner or operator may comply with the applicable emission limit for each process train or release point individually or comply with the applicable emission limit in paragraphs (f)(2)(i) or (f)(2)(ii) of this

section as a flow rate weighted average for a group of release points from the sulfur recovery plant provided that flow is monitored as specified in § 60.106a(a)(7); if flow is not monitored as specified in § 60.106a(a)(7), the owner or operator shall comply with the applicable emission limit in paragraphs (f)(2)(i) or (f)(2)(ii) of this section for each process train or release point individually. For a sulfur recovery plant with a design production capacity of 20 LTD or less and a reduction control system not followed by incineration, the owner or operator shall also comply with the H_2S emission limit in paragraph (f)(2)(iii) of this section for each individual release point.

(i) For a sulfur recovery plant with an oxidation control system or a reduction control system followed by incineration, the owner or operator shall not discharge or cause the discharge of any gases into the atmosphere containing SO_2 in excess of the emission limit calculated using Equation 2 of this section. For Claus units that use only ambient air in the Claus burner or that elect not to monitor O_2 concentration of the air/oxygen mixture used in the Claus burner or for non-Claus sulfur recovery plants, this SO_2 emission limit is 2,500 ppmv (dry basis) at zero percent excess air.

$$E_{SS} = k_1 \times \left(-0.38 \times (\%O_2)^2 + 115.3 \times \%O_2 + 256\right) \qquad \text{(Eq. 2)}$$

Where:

E_{SS} = Emission limit for small sulfur recovery plant, ppmv (as SO_2, dry basis at zero percent excess air);

k_1 = Constant factor for emission limit conversion: k_1 = 1 for converting to the SO_2 limit for a sulfur recovery plant with an oxidation control system or a reduction control system followed by incineration and k_1 = 1.2 for converting to the reduced sulfur compounds limit for a sulfur recovery plant with a reduction control system not followed by incineration; and

$\%O_2$ = O_2 concentration of the air/oxygen mixture supplied to the Claus burner, percent by volume (dry basis). If only ambient air is used in the Claus burner or if the owner or operator elects not to monitor O_2 concentration of the air/oxygen mixture used in the Claus burner or for non-Claus sulfur recovery plants, use 20.9% for $\%O_2$.

(ii) For a sulfur recovery plant with a reduction control system not followed by incineration, the owner or operator shall not discharge or cause the discharge of any gases into the atmosphere containing reduced sulfur compounds in excess of the emission limit calculated using Equation 2 of this section. For Claus units that use only ambient air in the Claus burner or for non-Claus sulfur recovery plants, this reduced sulfur compounds emission limit is 3,000 ppmv calculated as ppmv SO_2 (dry basis) at zero percent excess air.

(iii) For a sulfur recovery plant with a reduction control system not followed by incineration, the owner or operator shall not discharge or cause the discharge of any gases into the atmosphere containing H_2S in excess of 100 ppmv calculated as ppmv SO_2 (dry basis) at zero percent excess air.

(3) The emission limits in paragraphs (f)(1) and (2) shall not apply during periods of maintenance of the sulfur pit, which shall not exceed 240 hours per year. The owner or operator must document the time periods during which the sulfur pit vents were not controlled and measures taken to minimize emissions during these periods. Examples of these measures include not adding fresh sulfur or shutting off vent fans.

(g) * * *

(1) Except as provided in (g)(1)(iii) of this section, for each fuel gas combustion device, the owner or operator shall comply with either the emission limit in paragraph (g)(1)(i) of this section or the fuel gas concentration limit in paragraph (g)(1)(ii) of this section. For CO boilers or furnaces that are part of a fluid catalytic cracking unit or fluid coking unit affected facility, the owner or operator shall comply with the fuel gas concentration limit in paragraph (g)(1)(ii) of this section for all fuel gas streams combusted in these units.

* * * * *

■ 6. Section 60.104a is amended by:

■ a. Revising the first sentence of paragraph (a);

■ b. Revising paragraph (b);

■ c. Revising paragraph (f) introductory text;

■ d. Revising paragraph (h) introductory text;

■ e. Adding paragraph (h)(6); and

■ f. Removing and reserving paragraphs (j)(1) through (3).

The revisions and additions read as follows:

§ 60.104a Performance tests.

* * * * *

(a) The owner or operator shall conduct a performance test for each FCCU, FCU, sulfur recovery plant and fuel gas combustion device to demonstrate initial compliance with each applicable emissions limit in § 60.102a and conduct a performance test for each flare to demonstrate initial compliance with the H_2S concentration requirement in § 60.103a(h) according to the requirements of § 60.8. * * *

(b) The owner or operator of a FCCU or FCU that elects to monitor control device operating parameters according to the requirements in § 60.105a(b), to use bag leak detectors according to the requirements in § 60.105a(c), or to use COMS according to the requirements in § 60.105a(e) shall conduct a PM performance test at least annually (i.e., once per calendar year, with an interval of at least 8 months but no more than 16 months between annual tests) and furnish the Administrator a written report of the results of each test.

* * * * *

(f) The owner or operator of an FCCU or FCU that uses cyclones to comply with the PM per coke burn-off emissions limit in § 60.102a(b)(1) shall establish a site-specific opacity operating limit according to the procedures in paragraphs (f)(1) through (3) of this section.

* * * * *

(h) The owner or operator shall determine compliance with the SO_2 emissions limits for sulfur recovery plants in §§ 60.102a(f)(1)(i) and 60.102a(f)(2)(i) and the reduced sulfur compounds and H_2S emissions limits for sulfur recovery plants in §§ 60.102a(f)(1)(ii), 60.102a(f)(1)(iii), 60.102a(f)(2)(ii) and 60.102a(f)(2)(iii) using the following methods and procedures:

* * * * *

(6) If oxygen or oxygen-enriched air is used in the Claus burner and either Equation 1 or 2 of this subpart is used to determine the applicable emissions limit, determine the average O_2 concentration of the air/oxygen mixture supplied to the Claus burner, in percent by volume (dry basis), for the performance test using all hourly average O_2 concentrations determined during the test runs using the procedures in § 60.106a(a)(5) or (6).

* * * * *

■ 7. Section 60.105a is amended by:

■ a. Revising paragraph (b)(1)(i);

■ b. Revising paragraph (b)(1)(ii)(A);

■ c. Revising paragraph (b)(2);
■ d. Revising paragraph (h)(1);
■ e. Revising paragraph (h)(3)(i);
■ f. Revising paragraph (i)(1);
■ g. Redesignating paragraphs (i)(2) through (6) as (i)(3) through (7);
■ h. Adding paragraph (i)(2); and
■ i. Revising newly redesignated paragraph (i)(7).

The revisions and additions read as follows:

§ 60.105a Monitoring of emissions and operations for fluid catalytic cracking units (FCCU) and fluid coking units (FCU).

* * * * *

(b) * * *

(1) * * *

(i) For units controlled using an electrostatic precipitator, the owner or operator shall use CPMS to measure and record the hourly average total power input and secondary current to the entire system.

(ii) * * *

(A) As an alternative to pressure drop, the owner or operator of a jet ejector type wet scrubber or other type of wet scrubber equipped with atomizing spray nozzles must conduct a daily check of the air or water pressure to the spray nozzles and record the results of each check. Faulty (e.g., leaking or plugged) air or water lines must be repaired within 12 hours of identification of an abnormal pressure reading.

* * * * *

(2) For use in determining the coke burn-off rate for an FCCU or FCU, the owner or operator shall install, operate, calibrate, and maintain an instrument for continuously monitoring the concentrations of CO_2, O_2 (dry basis), and if needed, CO in the exhaust gases prior to any control or energy recovery system that burns auxiliary fuels. A CO monitor is not required for determining coke burn-off rate when no auxiliary fuel is burned and a continuous CO monitor is not required in accordance with § 60.105a(h)(3).

(i) The owner or operator shall install, operate, and maintain each CO_2 and O_2 monitor according to Performance Specification 3 of Appendix B to part 60.

(ii) The owner or operator shall conduct performance evaluations of each CO_2 and O_2 monitor according to the requirements in § 60.13(c) and Performance Specification 3 of Appendix B to part 60. The owner or operator shall use Method 3 of Appendix A–3 to part 60 for conducting the relative accuracy evaluations.

(iii) If a CO monitor is required, the owner or operator shall install, operate, and maintain each CO monitor according to Performance Specification 4 or 4A of Appendix B to part 60. If this CO monitor also serves to demonstrate compliance with the CO emissions limit in § 60.102a(b)(4), the span value for this instrument is 1,000 ppm; otherwise, the span value for this instrument should be set at approximately 2 times the typical CO concentration expected in the FCCU of FCU flue gas prior to any emission control or energy recovery system that burns auxiliary fuels.

(iv) If a CO monitor is required, the owner or operator shall conduct performance evaluations of each CO monitor according to the requirements in § 60.13(c) and Performance Specification 4 of Appendix B to part 60. The owner or operator shall use Method 10, 10A, or 10B of Appendix A–3 to part 60 for conducting the relative accuracy evaluations.

(v) The owner or operator shall comply with the quality assurance requirements of procedure 1 of Appendix F to part 60, including quarterly accuracy determinations for CO_2 and CO monitors, annual accuracy determinations for O_2 monitors, and daily calibration drift tests.

* * * * *

(h) * * *

(1) The owner or operator shall install, operate, and maintain each CO monitor according to Performance Specification 4 or 4A of appendix B to part 60. The span value for this instrument is 1,000 ppmv CO.

* * * * *

(3) * * *

(i) The demonstration shall consist of continuously monitoring CO emissions for 30 days using an instrument that meets the requirements of Performance Specification 4 or 4A of appendix B to part 60. The span value shall be 100 ppmv CO instead of 1,000 ppmv, and the relative accuracy limit shall be 10 percent of the average CO emissions or 5 ppmv CO, whichever is greater. For instruments that are identical to Method 10 of appendix A–4 to part 60 and employ the sample conditioning system of Method 10A of appendix A–4 to part 60, the alternative relative accuracy test procedure in section 10.1 of Performance Specification 2 of appendix B to part 60 may be used in place of the relative accuracy test.

* * * * *

(i) * * *

(1) If a CPMS is used according to § 60.105a(b)(1), all 3-hour periods during which the average PM control device operating characteristics, as measured by the continuous monitoring systems under § 60.105a(b)(1), fall below the levels established during the performance test. If the alternative to pressure drop CPMS is used for the owner or operator of a jet ejector type wet scrubber or other type of wet scrubber equipped with atomizing spray nozzles, each day in which abnormal pressure readings are not corrected within 12 hours of identification.

(2) If a bag leak detection system is used according to § 60.105a(c), each day in which the cause of an alarm is not alleviated within the time period specified in § 60.105a(c)(3).

* * * * *

(7) All 1-hour periods during which the average CO concentration as measured by the CO continuous monitoring system under § 60.105a(h) exceeds 500 ppmv or, if applicable, all 1-hour periods during which the average temperature and O_2 concentration as measured by the continuous monitoring systems under § 60.105a(h)(4) fall below the operating limits established during the performance test.

* * * * *

■ 8. Section 60.106a is amended by:
■ a. Revising paragraph (a)(1)(i);
■ b. Adding paragraphs (a)(1)(iv) through (vii);
■ c. Revising paragraph (a)(2) introductory text;
■ d. Revising paragraphs (a)(2)(i) and (ii);
■ e. Revising the first sentence of paragraph (a)(2)(iii);
■ f. Removing paragraphs (a)(2)(iv) and (v);
■ g. Redesignating (a)(2)(vi) through (ix) as (a)(2)(iv) through (vii);
■ h. Revising the first sentence of paragraph (a)(3) introductory text;
■ i. Revising paragraph (a)(3)(i);
■ j. Adding paragraphs (a)(4) through (7); and
■ k. Revising paragraphs (b)(2) and (3).

The revisions and additions read as follows:

§ 60.106a Monitoring of emissions and operations for sulfur recovery plants.

(a) * * *

(1) * * *

(i) The span value for the SO_2 monitor is two times the applicable SO_2 emission limit at the highest O_2 concentration in the air/oxygen stream used in the Claus burner, if applicable.

* * * * *

(iv) The owner or operator shall install, operate, and maintain each O_2 monitor according to Performance Specification 3 of Appendix B to part 60.

(v) The span value for the O_2 monitor must be selected between 10 and 25 percent, inclusive.

(vi) The owner or operator shall conduct performance evaluations for the

O_2 monitor according to the requirements of § 60.13(c) and Performance Specification 3 of Appendix B to part 60. The owner or operator shall use Methods 3, 3A, or 3B of Appendix A–2 to part 60 for conducting the relative accuracy evaluations. The method ANSI/ASME PTC 19.10–1981, ''Flue and Exhaust Gas Analyses,'' (incorporated by reference—see § 60.17) is an acceptable alternative to EPA Method 3B of Appendix A–2 to part 60.

(vii) The owner or operator shall comply with the applicable quality assurance procedures of Appendix F to part 60 for each monitor, including annual accuracy determinations for each O_2 monitor, and daily calibration drift determinations.

(2) For sulfur recovery plants that are subject to the reduced sulfur compounds emission limit in § 60.102a(f)(1)(ii) or § 60.102a(f)(2)(ii), the owner or operator shall install, operate, calibrate, and maintain an instrument for continuously monitoring and recording the concentration of reduced sulfur compounds and O_2 emissions into the atmosphere. The reduced sulfur compounds emissions shall be calculated as SO_2 (dry basis, zero percent excess air).

(i) The span value for the reduced sulfur compounds monitor is two times the applicable reduced sulfur compounds emission limit as SO_2 at the highest O_2 concentration in the air/oxygen stream used in the Claus burner, if applicable.

(ii) The owner or operator shall install, operate, and maintain each reduced sulfur compounds CEMS according to Performance Specification 5 of Appendix B to part 60.

(iii) The owner or operator shall conduct performance evaluations of each reduced sulfur compounds monitor according to the requirements in § 60.13(c) and Performance Specification 5 of Appendix B to part 60. * * *

* * * * *

(3) In place of the reduced sulfur compounds monitor required in paragraph (a)(2) of this section, the owner or operator may install, calibrate, operate, and maintain an instrument using an air or O_2 dilution and oxidation system to convert any reduced sulfur to SO_2 for continuously monitoring and recording the concentration (dry basis, 0 percent excess air) of the total resultant SO_2. * * *

(i) The span value for this monitor is two times the applicable reduced sulfur compounds emission limit as SO_2 at the highest O_2 concentration in the air/oxygen stream used in the Claus burner, if applicable.

* * * * *

(4) For sulfur recovery plants that are subject to the H_2S emission limit in § 60.102a(f)(1)(iii) or § 60.102a(f)(2)(iii), the owner or operator shall install, operate, calibrate, and maintain an instrument for continuously monitoring and recording the concentration of H_2S, and O_2 emissions into the atmosphere. The H_2S emissions shall be calculated as SO_2 (dry basis, zero percent excess air).

(i) The span value for this monitor is two times the applicable H_2S emission limit.

(ii) The owner or operator shall install, operate, and maintain each H_2S CEMS according to Performance Specification 7 of appendix B to part 60.

(iii) The owner or operator shall conduct performance evaluations for each H_2S monitor according to the requirements of § 60.13(c) and Performance Specification 7 of appendix B to part 60. The owner or operator shall use Methods 11 or 15 of appendix A–5 to part 60 or Method 16 of appendix A–6 to part 60 for conducting the relative accuracy evaluations. The method ANSI/ASME PTC 19.10–1981, ''Flue and Exhaust Gas Analyses,'' (incorporated by reference—see § 60.17) is an acceptable alternative to EPA Method 15A of appendix A–5 to part 60.

(iv) The owner or operator shall install, operate, and maintain each O_2 monitor according to Performance Specification 3 of appendix B to part 60.

(v) The span value for the O_2 monitor must be selected between 10 and 25 percent, inclusive.

(vi) The owner or operator shall conduct performance evaluations for the O_2 monitor according to the requirements of § 60.13(c) and Performance Specification 3 of appendix B to part 60. The owner or operator shall use Methods 3, 3A, or 3B of appendix A–2 to part 60 for conducting the relative accuracy evaluations. The method ANSI/ASME PTC 19.10–1981, ''Flue and Exhaust Gas Analyses,'' (incorporated by reference—see § 60.17) is an acceptable alternative to EPA Method 3B of appendix A–2 to part 60.

(vii) The owner or operator shall comply with the applicable quality assurance procedures of appendix F to part 60 for each monitor, including annual accuracy determinations for each O_2 monitor, and daily calibration drift determinations.

(5) For sulfur recovery plants that use oxygen or oxygen enriched air in the Claus burner and that elects to monitor O_2 concentration of the air/oxygen mixture supplied to the Claus burner, the owner or operator shall install, operate, calibrate, and maintain an instrument for continuously monitoring and recording the O_2 concentration of the air/oxygen mixture supplied to the Claus burner in order to determine the allowable emissions limit.

(i) The owner or operator shall install, operate, and maintain each O_2 monitor according to Performance Specification 3 of appendix B to part 60.

(ii) The span value for the O_2 monitor shall be 100 percent.

(iii) The owner or operator shall conduct performance evaluations for the O_2 monitor according to the requirements of § 60.13(c) and Performance Specification 3 of appendix B to part 60. The owner or operator shall use Methods 3, 3A, or 3B of appendix A–2 to part 60 for conducting the relative accuracy evaluations. The method ANSI/ASME PTC 19.10–1981, ''Flue and Exhaust Gas Analyses,'' (incorporated by reference—see § 60.17) is an acceptable alternative to EPA Method 3B of appendix A–2 to part 60.

(iv) The owner or operator shall comply with the applicable quality assurance procedures of appendix F to part 60 for each monitor, including annual accuracy determinations for each O_2 monitor, and daily calibration drift determinations.

(v) The owner or operator shall use the hourly average O_2 concentration from this monitor for use in Equation 1 or 2 of § 60.102a(f), as applicable, for each hour and determine the allowable emission limit as the arithmetic average of 12 contiguous 1-hour averages (i.e., the rolling 12-hour average).

(6) As an alternative to the O_2 monitor required in paragraph (a)(5) of this section, the owner or operator may install, calibrate, operate, and maintain a CPMS to measure and record the volumetric gas flow rate of ambient air and oxygen-enriched gas supplied to the Claus burner and calculate the hourly average O_2 concentration of the air/oxygen mixture used in the Claus burner as specified in paragraphs (a)(6)(i) through (iv) of this section in order to determine the allowable emissions limit as specified in paragraphs (a)(6)(v) of this section.

(i) The owner or operator shall install, calibrate, operate and maintain each flow monitor according to the manufacturer's procedures and specifications and the following requirements.

(A) The owner or operator shall install locate the monitor in a position that

provides a representative measurement of the total gas flow rate.

(B) Use a flow sensor with a measurement sensitivity of no more than 5 percent of the flow rate or 10 cubic feet per minute, whichever is greater.

(C) Use a flow monitor that is maintainable online, is able to continuously correct for temperature, pressure and, for ambient air flow monitor, moisture content, and is able to record dry flow in standard conditions (as defined in § 60.2) over one-minute averages.

(D) At least quarterly, perform a visual inspection of all components of the monitor for physical and operational integrity and all electrical connections for oxidation and galvanic corrosion if the flow monitor is not equipped with a redundant flow sensor.

(E) Recalibrate the flow monitor in accordance with the manufacturer's procedures and specifications biennially (every two years) or at the frequency specified by the manufacturer.

(ii) The owner or operator shall use 20.9 percent as the oxygen content of the ambient air.

(iii) The owner or operator shall use product specifications (e.g., as reported in material safety data sheets) for percent oxygen for purchased oxygen. For oxygen produced onsite, the percent oxygen shall be determined by periodic measurements or process knowledge.

(iv) The owner or operator shall calculate the hourly average O_2 concentration of the air/oxygen mixture used in the Claus burner using Equation 10 of this section:

$$\%O_2 = \left(\frac{20.9 \times Q_{air} + \%O_{2,oxy} \times Q_{oxy}}{Q_{air} + Q_{oxy}} \right) \qquad \text{(Eq. 10)}$$

Where:

$\%O_2$ = O_2 concentration of the air/oxygen mixture used in the Claus burner, percent by volume (dry basis);

20.9 = O_2 concentration in air, percent dry basis;

Q_{air} = Volumetric flow rate of ambient air used in the Claus burner, dscfm;

$\%O_{2,oxy}$ = O_2 concentration in the enriched oxygen stream, percent dry basis; and

Q_{oxy} = Volumetric flow rate of enriched oxygen stream used in the Claus burner, dscfm.

(v) The owner or operator shall use the hourly average O_2 concentration determined using Equation 8 of this section for use in Equation 1 or 2 of § 60.102a(f), as applicable, for each hour and determine the allowable emission limit as the arithmetic average of 12 contiguous 1-hour averages (i.e., the rolling 12-hour average).

(7) Owners or operators of a sulfur recovery plant that elects to comply with the SO_2 emission limit in § 60.102a(f)(1)(i) or § 60.102a(f)(2)(i) or the reduced sulfur compounds emission limit in § 60.102a(f)(1)(ii) or § 60.102a(f)(2)(ii) as a flow rate weighted average for a group of release points from the sulfur recovery plant rather than for each process train or release point individually shall install, calibrate, operate, and maintain a CPMS to measure and record the volumetric gas flow rate of each release point within the group of release points from the sulfur recovery plant as specified in paragraphs (a)(7)(i) through (iv) of this section.

(i) The owner or operator shall install, calibrate, operate and maintain each flow monitor according to the manufacturer's procedures and specifications and the following requirements.

(A) The owner or operator shall install locate the monitor in a position that provides a representative measurement of the total gas flow rate.

(B) Use a flow sensor with a measurement sensitivity of no more than 5 percent of the flow rate or 10 cubic feet per minute, whichever is greater.

(C) Use a flow monitor that is maintainable online, is able to continuously correct for temperature, pressure, and moisture content, and is able to record dry flow in standard conditions (as defined in § 60.2) over one-minute averages.

(D) At least quarterly, perform a visual inspection of all components of the monitor for physical and operational integrity and all electrical connections for oxidation and galvanic corrosion if the flow monitor is not equipped with a redundant flow sensor.

(E) Recalibrate the flow monitor in accordance with the manufacturer's procedures and specifications biennially (every two years) or at the frequency specified by the manufacturer.

(ii) The owner or operator shall correct the flow to 0 percent excess air using Equation 11 of this section:

$$Q_{adj} = Q_{meas} \left[\left(20.9 - \%O_2\right) \Big/ 20.9_c \right] \qquad \text{(Eq. 11)}$$

Where:

Q_{adj} = Volumetric flow rate adjusted to 0 percent excess air, dry standard cubic feet per minute (dscfm);

C_{meas} = Volumetric flow rate measured by the flow meter corrected to dry standard conditions, dscfm;

20.9_c = 20.9 percent O_2 − 0.0 percent O_2 (defined O_2 correction basis), percent;

20.9 = O_2 concentration in air, percent; and

$\%O_2$ = O_2 concentration measured on a dry basis, percent.

(iii) The owner or operator shall calculate the flow weighted average SO_2 or reduced sulfur compounds concentration for each hour using Equation 12 of this section:

$$C_{ave} = \frac{\sum_{n=1}^{N} \left(C_n \times Q_{adj,n}\right)}{\sum_{n=1}^{N} Q_{adj,n}} \qquad \text{(Eq. 12)}$$

Where:

C_{ave} = Flow weighted average concentration of the pollutant, ppmv (dry basis, zero percent excess air). The pollutant is either SO_2 [if complying with the SO_2 emission limit in § 60.102a(f)(1)(i) or § 60.102a(f)(2)(i)] or reduced sulfur compounds [if complying with the reduced sulfur compounds emission limit in § 60.102a(f)(1)(ii) or § 60.102a(f)(2)(ii)];

N = Number of release points within the group of release points from the sulfur recovery plant for which emissions averaging is elected;

C_n = Pollutant concentration in the nth release point within the group of release points from the sulfur recovery plant for which emissions averaging is elected, ppmv (dry basis, zero percent excess air);

$Q_{adj,n}$ = Volumetric flow rate of the nth release point within the group of release points from the sulfur recovery plant for which emissions averaging is elected, dry standard cubic feet per minute (dscfm, adjusted to 0 percent excess air).

(iv) For sulfur recovery plants that use oxygen or oxygen enriched air in the Claus burner, the owner or operator shall use Equation 10 of this section and the hourly emission limits determined in paragraphs (a)(5)(v) or (a)(6)(v) of this section in-place of the pollutant concentration to determine the flow weighted average hourly emission limit for each hour. The allowable emission limit shall be calculated as the arithmetic average of 12 contiguous 1-hour averages (i.e., the rolling 12-hour average).

(b) * * *

(2) All 12-hour periods during which the average concentration of reduced sulfur compounds (as SO_2) as measured by the reduced sulfur compounds continuous monitoring system required under paragraph (a)(2) or (3) of this section exceeds the applicable emission limit; or

(3) All 12-hour periods during which the average concentration of H_2S as measured by the H_2S continuous monitoring system required under paragraph (a)(4) of this section exceeds the applicable emission limit (dry basis, 0 percent excess air).

■ 9. Section 60.107a is amended by:

■ a. Revising paragraphs (a)(1)(i) and (ii);

■ b. Revising paragraph (b)(1)(iv);

■ c. Revising the first sentence of paragraph (b)(3)(iii);

■ d. Revising paragraph (d)(3);

■ e. Revising paragraph (e)(1) introductory text;

■ f. Revising paragraph (e)(1)(ii);

■ g. Revising paragraph (e)(2) introductory text;

■ h. Revising paragraph (e)(2)(ii);

■ i. Revising paragraph (e)(2)(vi)(C);

■ j. Revising paragraph (e)(3); and

■ k. Revising paragraph (h)(5).

The revisions read as follows:

§ 60.107a Monitoring of emissions and operations for fuel gas combustion devices and flares.

(a) * * *

(1) * * *

(i) The owner or operator shall install, operate, and maintain each SO_2 monitor according to Performance Specification 2 of appendix B to part 60. The span value for the SO_2 monitor is 50 ppmv SO_2.

(ii) The owner or operator shall conduct performance evaluations for the SO_2 monitor according to the requirements of § 60.13(c) and Performance Specification 2 of appendix B to part 60. The owner or operator shall use Methods 6, 6A, or 6C of appendix A–4 to part 60 for conducting the relative accuracy evaluations. The method ANSI/ASME PTC 19.10–1981, ''Flue and Exhaust Gas Analyses,'' (incorporated by reference—see § 60.17) is an acceptable alternative to EPA Method 6 or 6A of appendix A–4 to part 60. Samples taken by Method 6 of appendix A–4 to part 60 shall be taken at a flow rate of approximately 2 liters/min for at least 30 minutes. The relative accuracy limit shall be 20 percent or 4 ppmv, whichever is greater, and the calibration drift limit shall be 5 percent of the established span value.

* * * * *

(b) * * *

(1) * * *

(iv) The supporting test results from sampling the requested fuel gas stream/system demonstrating that the sulfur content is less than 5 ppmv H_2S. Sampling data must include, at minimum, 2 weeks of daily monitoring (14 grab samples) for frequently operated fuel gas streams/systems; for infrequently operated fuel gas streams/systems, seven grab samples must be collected unless other additional information would support reduced sampling. The owner or operator shall use detector tubes (''length-of-stain tube'' type measurement) following the ''Gas Processors Association Standard 2377–86, Test for Hydrogen Sulfide and Carbon Dioxide in Natural Gas Using Length of Stain Tubes,'' 1986 Revision (incorporated by reference—see § 60.17), using tubes with a maximum span between 10 and 40 ppmv inclusive when $1 \leq N \leq 10$, where N = number of pump strokes, to test the applicant fuel gas stream for H_2S; and

* * * * *

(3) * * *

(iii) If the operation change results in a sulfur content that is outside the range of concentrations included in the original application and the owner or operator chooses not to submit new information to support an exemption, the owner or operator must begin H_2S monitoring using daily stain sampling to demonstrate compliance using length-of-stain tubes with a maximum span between 200 and 400 ppmv inclusive when $1 \leq N \leq 5$, where N = number of pump strokes. * * *

* * * * *

(d) * * *

(3) As an alternative to the requirements in paragraph (d)(2) of this section, the owner or operator of a gas-fired process heater shall install, operate and maintain a gas composition analyzer and determine the average F factor of the fuel gas using the factors in Table 1 of this subpart and Equation 13 of this section. If a single fuel gas system provides fuel gas to several process heaters, the F factor may be determined at a single location in the fuel gas system provided it is representative of the fuel gas fed to the affected process heater(s).

$$F_d = \frac{1{,}000{,}000 \times \sum \left(X_i \times MEV_i \right)}{\sum \left(X_i \times MHC_i \right)} \qquad \text{(Eq. 13)}$$

Where:

F_d = F factor on dry basis at 0% excess air, dscf/MMBtu.

X_i = mole or volume fraction of each component in the fuel gas.

MEV_i = molar exhaust volume, dry standard cubic feet per mole (dscf/mol).

MHC_i = molar heat content, Btu per mole (Btu/mol).

1,000,000 = unit conversion, Btu per MMBtu.

* * * * *

(e) * * *

(1) *Total reduced sulfur monitoring requirements.* The owner or operator shall install, operate, calibrate and maintain an instrument or instruments for continuously monitoring and

recording the concentration of total reduced sulfur in gas discharged to the flare.

* * * * *

(ii) The owner or operator shall conduct performance evaluations of each total reduced sulfur monitor according to the requirements in § 60.13(c) and Performance Specification 5 of Appendix B to part 60. The owner or operator of each total reduced sulfur monitor shall use EPA Method 15A of Appendix A–5 to part 60 for conducting the relative accuracy evaluations. The method ANSI/ASME PTC 19.10–1981 (incorporated by reference—see § 60.17) is an acceptable alternative to EPA Method 15A of Appendix A–5 to part 60. The alternative relative accuracy procedures described in section 16.0 of Performance Specification 2 of Appendix B to part 60 (cylinder gas audits) may be used for conducting the relative accuracy evaluations, except that it is not necessary to include as much of the sampling probe or sampling line as practical.

* * * * *

(2) *H_2S monitoring requirements.* The owner or operator shall install, operate, calibrate, and maintain an instrument or instruments for continuously monitoring and recording the concentration of H_2S in gas discharged to the flare according to the requirements in paragraphs (e)(2)(i) through (iii) of this section and shall collect and analyze samples of the gas and calculate total sulfur concentrations as specified in paragraphs (e)(2)(iv) through (ix) of this section.

* * * * *

(ii) The owner or operator shall conduct performance evaluations of each H_2S monitor according to the requirements in § 60.13(c) and Performance Specification 7 of Appendix B to part 60. The owner or operator shall use EPA Method 11, 15 or 15A of Appendix A–5 to part 60 for conducting the relative accuracy evaluations. The method ANSI/ASME PTC 19.10–1981 (incorporated by reference—see § 60.17) is an acceptable alternative to EPA Method 15A of Appendix A–5 to part 60. The alternative relative accuracy procedures described in section 16.0 of Performance Specification 2 of Appendix B to part 60 (cylinder gas audits) may be used for conducting the relative accuracy evaluations, except that it is not necessary to include as much of the sampling probe or sampling line as practical.

* * * * *

(vi) * * *

(C) Determine the acceptable range for subsequent weekly samples based on the 95-percent confidence interval for the distribution of daily ratios based on the 10 individual daily ratios using Equation 14 of this section.

$$AR = Ratio_{Avg} \pm 2.262 \times SDev \qquad \text{(Eq. 14)}$$

Where:

AR = Acceptable range of subsequent ratio determinations, unitless.

$Ratio_{Avg}$ = 10-day average total sulfur-to-H_2S concentration ratio, unitless.

2.262 = t-distribution statistic for 95-percent 2-sided confidence interval for 10 samples (9 degrees of freedom).

SDev = Standard deviation of the 10 daily average total sulfur-to-H_2S concentration ratios used to develop the 10-day average total sulfur-to-H_2S concentration ratio, unitless.

* * * * *

(3) *SO_2 monitoring requirements.* The owner or operator shall install, operate, calibrate, and maintain an instrument for continuously monitoring and recording the concentration of SO_2 from a process heater or other fuel gas combustion device that is combusting gas representative of the fuel gas in the flare gas line according to the requirements in paragraph (a)(1) of this section, determine the F factor of the fuel gas at least daily according to the requirements in paragraphs (d)(2) through (4) of this section, determine the higher heating value of the fuel gas at least daily according to the requirements in paragraph (d)(7) of this section, and calculate the total sulfur content (as SO_2) in the fuel gas using Equation 15 of this section.

Where:

TS_{FG} = Total sulfur concentration, as SO_2, in the fuel gas, ppmv.

C_{SO2} = Concentration of SO_2 in the exhaust gas, ppmv (dry basis at 0-percent excess air).

F_d = F factor gas on dry basis at 0-percent excess air, dscf/MMBtu.

HHV_{FG} = Higher heating value of the fuel gas, MMBtu/scf.

* * * * *

(h) * * *

(5) *Daily O_2 limits for fuel gas combustion devices.* Each day during which the concentration of O_2 as measured by the O_2 continuous monitoring system required under paragraph (c)(6) or (d)(8) of this section exceeds the O_2 operating limit or operating curve determined during the most recent biennial performance test.

PART 63—NATIONAL EMISSION STANDARDS FOR HAZARDOUS AIR POLLUTANTS FOR SOURCE CATEGORIES

■ 10. The authority citation for part 63 continues to read as follows:

Authority: 42 U.S.C. 7401, *et seq.*

Subpart A—[Amended]

■ 11. Section 63.14 is amended by:

■ a. Revising paragraph (g)(14);

■ b. Adding paragraphs (g)(95) and (96);

■ c. Adding paragraph (i)(2);

■ d. Adding paragraphs (l)(21) through (23); and

■ e. Adding paragraphs (m)(3) and (s).

The revisions and additions read as follows:

§ 63.14 Incorporation by reference.

* * * * *

(g) * * *

(14) ASTM D1945–03 (Reapproved 2010), Standard Test Method for Analysis of Natural Gas by Gas Chromatography, (Approved January 1, 2010), IBR approved for §§ 63.670(j), 63.772(h), and 63.1282(g).

* * * * *

(95) ASTM D6196–03 (Reapproved 2009), Standard Practice for Selection of Sorbents, Sampling, and Thermal Desorption Analysis Procedures for Volatile Organic Compounds in Air, IBR approved for appendix A to part 63: Method 325A, Sections 1.2 and 6.1, and Method 325B, Sections 1.3, 7.1.2, 7.1.3, and A.1.1.

(96) ASTM UOP539–12, Refinery Gas Analysis by Gas Chromatography, IBR approved for § 63.670(j).

* * * * *

(i) * * *

(2) BS EN 14662–4:2005, Ambient Air Quality: Standard Method for the Measurement of Benzene Concentrations—Part 4: Diffusive Sampling Followed By Thermal Desorption and Gas Chromatography, IBR approved for appendix A to part 63: Method 325A, Section 1.2, and Method 325B, Sections 1.3, 7.1.3, and A.1.1.

* * * * *

(l) * * *

(21) EPA–454/R–99–005, Office of Air Quality Planning and Standards (OAQPS), Meteorological Monitoring

Guidance for Regulatory Modeling Applications, February 2000, IBR approved for appendix A to part 63: Method 325A, Section 8.3.

(22) EPA–454/B–08–002, Office of Air Quality Planning and Standards (OAQPS), Quality Assurance Handbook for Air Pollution Measurement Systems, Volume IV: Meteorological Measurements, Version 2.0 (Final), March 2008, IBR approved for § 63.658(d) and appendix A to part 63: Method 325A, Sections 8.1.4 and 10.0.

(23) EPA–454/B–13–003, Office of Air Quality Planning and Standards (OAQPS), Quality Assurance Handbook for Air Pollution Measurement Systems, Volume II: Ambient Air Quality Monitoring Program, May 2013, IBR approved for § 63.658(c) and appendix A to part 63: Method 325A, Section 4.1.

(m) * * *

(3) ISO 16017–2:2003, Indoor, Ambient and Workplace Air—Sampling and Analysis of Volatile Organic Compounds by Sorbent Tube/Thermal Desorption/Capillary Gas Chromatography—Part 2: Diffusive Sampling, First edition, June 11, 2003, IBR approved for appendix A to part 63: Method 325A, Sections 1.2, 6.1, and 6.5, and Method 325B, Sections 1.3, 7.1.2, 7.1.3, and A.1.1.

* * * * *

(s) U.S. Department of the Interior, 1849 C Street NW., Washington, DC 20240, (202) 208–3100, *www.doi.gov.*

(1) Bulletin 627, Bureau of Mines, Flammability Characteristics of Combustible Gases and Vapors, 1965, IBR approved for § 63.670(l).

(2) [Reserved]

Subpart Y—[Amended]

■ 12. Section 63.560 is amended by revising paragraph (a)(4) to read as follows:

§ 63.560 Applicability and designation of affected source.

(a) * * *

(4) Existing sources with emissions less than 10 and 25 tons must meet the submerged fill standards of 46 CFR 153.282.

* * * * *

Subpart CC—[Amended]

■ 13. Section 63.640 is amended by:

■ a. Revising paragraph (a) introductory text;

■ b. Revising paragraph (c) introductory text;

■ c. Adding paragraph (c)(9);

■ d. Revising paragraph (d)(5);

■ e. Revising paragraph (h);

■ f. Revising paragraph (k)(1);

■ g. Revising paragraph (l) introductory text;

■ h. Revising paragraph (l)(2) introductory text;

■ i. Revising paragraph (l)(2)(i);

■ j. Revising paragraph (l)(3) introductory text;

■ k. Revising paragraph (m) introductory text;

■ l. Revising paragraph (n) introductory text;

■ m. Revising paragraphs (n)(1) through (5);

■ n. Revising paragraph (n)(8) introductory text;

■ o. Revising paragraph (n)(8)(ii);

■ p. Adding paragraphs (n)(8)(vii) and (viii);

■ q. Revising paragraph (n)(9)(i);

■ r. Adding paragraph (n)(10);

■ s. Revising paragraph (o)(2)(i) introductory text;

■ t. Adding paragraph (o)(2)(i)(D);

■ u. Revising paragraph (o)(2)(ii) introductory text;

■ v. Adding paragraph (o)(2)(ii)(C); and

■ w. Revising paragraph (p)(2).

The revisions and additions read as follows:

§ 63.640 Applicability and designation of affected source.

(a) This subpart applies to petroleum refining process units and to related emissions points that are specified in paragraphs (c)(1) through (9) of this section that are located at a plant site and that meet the criteria in paragraphs (a)(1) and (2) of this section:

* * * * *

(c) For the purposes of this subpart, the affected source shall comprise all emissions points, in combination, listed in paragraphs (c)(1) through (c)(9) of this section that are located at a single refinery plant site.

* * * * *

(9) All releases associated with the decoking operations of a delayed coking unit, as defined in this subpart.

* * * * *

(d) * * *

(5) Emission points routed to a fuel gas system, as defined in § 63.641 of this subpart, provided that on and after [THE DATE 3 YEARS AFTER THE DATE OF PUBLICATION OF THE FINAL RULE AMENDMENTS IN THE **FEDERAL REGISTER**], any flares receiving gas from that fuel gas system are in compliance with § 63.670. No other testing, monitoring, recordkeeping, or reporting is required for refinery fuel gas systems or emission points routed to refinery fuel gas systems.

* * * * *

(h) Sources subject to this subpart are required to achieve compliance on or before the dates specified in table 11 of this subpart, except as provided in paragraphs (h)(1) through (3) of this section.

(1) Marine tank vessels at existing sources shall be in compliance with this subpart, except for §§ 63.657 through 63.661, no later than August 18, 1999, unless the vessels are included in an emissions average to generate emission credits. Marine tank vessels used to generate credits in an emissions average shall be in compliance with this subpart no later than August 18, 1998 unless an extension has been granted by the Administrator as provided in § 63.6(i).

(2) Existing Group 1 floating roof storage vessels meeting the applicability criteria in item 1 of the definition of Group 1 storage vessel shall be in compliance with § 63.646 at the first degassing and cleaning activity after August 18, 1998, or August 18, 2005, whichever is first.

(3) An owner or operator may elect to comply with the provisions of § 63.648(c) through (i) as an alternative to the provisions of § 63.648(a) and (b). In such cases, the owner or operator shall comply no later than the dates specified in paragraphs (h)(3)(i) through (h)(3)(iii) of this section.

(i) Phase I (see table 2 of this subpart), beginning on August 18, 1998;

(ii) Phase II (see table 2 of this subpart), beginning no later than August 18, 1999; and

(iii) Phase III (see table 2 of this subpart), beginning no later than February 18, 2001.

* * * * *

(k) * * *

(1) The reconstructed source, addition, or change shall be in compliance with the new source requirements in item (1), (2), or (3) of table 11 of this subpart, as applicable, upon initial startup of the reconstructed source or by August 18, 1995, whichever is later; and

* * * * *

(l) If an additional petroleum refining process unit is added to a plant site or if a miscellaneous process vent, storage vessel, gasoline loading rack, marine tank vessel loading operation, heat exchange system, or decoking operation that meets the criteria in paragraphs (c)(1) through (9) of this section is added to an existing petroleum refinery or if another deliberate operational process change creating an additional Group 1 emissions point(s) (as defined in § 63.641) is made to an existing petroleum refining process unit, and if the addition or process change is not subject to the new source requirements as determined according to paragraphs (i) or (j) of this section, the requirements in paragraphs (l)(1) through (4) of this

section shall apply. Examples of process changes include, but are not limited to, changes in production capacity, or feed or raw material where the change requires construction or physical alteration of the existing equipment or catalyst type, or whenever there is replacement, removal, or addition of recovery equipment. For purposes of this paragraph and paragraph (m) of this section, process changes do not include: Process upsets, unintentional temporary process changes, and changes that are within the equipment configuration and operating conditions documented in the Notification of Compliance Status report required by § 63.655(f).

* * * * *

(2) The added emission point(s) and any emission point(s) within the added or changed petroleum refining process unit shall be in compliance with the applicable requirements in item (4) of table 11 of this subpart by the dates specified in paragraphs (l)(2)(i) or (l)(2)(ii) of this section.

(i) If a petroleum refining process unit is added to a plant site or an emission point(s) is added to any existing petroleum refining process unit, the added emission point(s) shall be in compliance upon initial startup of any added petroleum refining process unit or emission point(s) or by the applicable compliance date in item (4) of table 11 of this subpart, whichever is later.

* * * * *

(3) The owner or operator of a petroleum refining process unit or of a storage vessel, miscellaneous process vent, wastewater stream, gasoline loading rack, marine tank vessel loading operation, heat exchange system, or decoking operation meeting the criteria in paragraphs (c)(1) through (9) of this section that is added to a plant site and is subject to the requirements for existing sources shall comply with the reporting and recordkeeping requirements that are applicable to existing sources including, but not limited to, the reports listed in paragraphs (l)(3)(i) through (vii) of this section. A process change to an existing petroleum refining process unit shall be subject to the reporting requirements for existing sources including, but not limited to, the reports listed in paragraphs (l)(3)(i) through (l)(3)(vii) of this section. The applicable reports include, but are not limited to:

* * * * *

(m) If a change that does not meet the criteria in paragraph (l) of this section is made to a petroleum refining process unit subject to this subpart, and the change causes a Group 2 emission point to become a Group 1 emission point (as defined in § 63.641), then the owner or operator shall comply with the applicable requirements of this subpart for existing sources, as specified in item (4) of table 11 of this subpart, for the Group 1 emission point as expeditiously as practicable, but in no event later than 3 years after the emission point becomes Group 1.

* * * * *

(n) Overlap of subpart CC with other regulations for storage vessels. As applicable, paragraphs (n)(1), (n)(3), (n)(4), (n)(6), and (n)(7) of this section apply for Group 2 storage vessels and paragraphs (n)(2) and (n)(5) of this section apply for Group 1 storage vessels.

(1) After the compliance dates specified in paragraph (h) of this section, a Group 2 storage vessel that is subject to the provisions of 40 CFR part 60, subpart Kb is required to comply only with the requirements of 40 CFR part 60, subpart Kb, except as provided in paragraph (n)(8) of this section. After the compliance dates specified in paragraph (h) of this section, a Group 2 storage vessel that is subject to the provisions of CFR part 61, subpart Y is required to comply only with the requirements of 40 CFR part 60, subpart Y, except as provided in paragraph (n)(10) of this section.

(2) After the compliance dates specified in paragraph (h) of this section, a Group 1 storage vessel that is also subject to 40 CFR part 60, subpart Kb is required to comply only with either 40 CFR part 60, subpart Kb, except as provided in paragraph (n)(8) of this section; or this subpart. After the compliance dates specified in paragraph (h) of this section, a Group 1 storage vessel that is also subject to 40 CFR part 61, subpart Y is required to comply only with either 40 CFR part 61, subpart Y, except as provided in paragraph (n)(10) of this section; or this subpart.

(3) After the compliance dates specified in paragraph (h) of this section, a Group 2 storage vessel that is part of a new source and is subject to 40 CFR 60.110b, but is not required to apply controls by 40 CFR 60.110b or 60.112b, is required to comply only with this subpart.

(4) After the compliance dates specified in paragraph (h) of this section, a Group 2 storage vessel that is part of a new source and is subject to 40 CFR 61.270, but is not required to apply controls by 40 CFR 61.271, is required to comply only with this subpart.

(5) After the compliance dates specified in paragraph (h) of this section, a Group 1 storage vessel that is also subject to the provisions of 40 CFR part 60, subparts K or Ka is required to only comply with the provisions of this subpart.

* * * * *

(8) Storage vessels described by paragraph (n)(1) of this section are to comply with 40 CFR part 60, subpart Kb except as provided in paragraphs (n)(8)(i) through (n)(8)(vi) of this section. Storage vessels described by paragraph (n)(2) electing to comply with part 60, subpart Kb of this chapter shall comply with subpart Kb except as provided in paragraphs (n)(8)(i) through (n)(8)(vii) of this section.

* * * * *

(ii) If the owner or operator determines that it is unsafe to perform the seal gap measurements required in § 60.113b(b) of subpart Kb or to inspect the vessel to determine compliance with § 60.113b(a) of subpart Kb because the roof appears to be structurally unsound and poses an imminent danger to inspecting personnel, the owner or operator shall comply with the requirements in either § 63.120(b)(7)(i) or § 63.120(b)(7)(ii) of subpart G (only up to the compliance date specified in paragraph (h) of this section for compliance with § 63.660, as applicable) or either § 63.1063(c)(2)(iv)(A) or § 63.1063(c)(2)(iv)(B) of subpart WW.

* * * * *

(vii) To be in compliance with § 60.112b(a)(2)(ii) of this chapter, floating roof storage vessels must be equipped with guidepole controls as described in Appendix I: Acceptable Controls for Slotted Guidepoles Under the Storage Tank Emissions Reduction Partnership Program (available at *http://www.epa.gov/ttn/atw/petrefine/petrefpg.html*).

(viii) If a flare is used as a control device for a storage vessel, on and after [THE DATE 3 YEARS AFTER THE DATE OF PUBLICATION OF THE FINAL RULE AMENDMENTS IN THE **FEDERAL REGISTER**], the owner or operator must meet the requirements of § 63.670 instead of the requirements referenced from part 60, subpart Kb of this chapter for that flare.

(9) * * *

(i) If the owner or operator determines that it is unsafe to perform the seal gap measurements required in § 60.113a(a)(1) of subpart Ka because the floating roof appears to be structurally unsound and poses an imminent danger to inspecting personnel, the owner or operator shall comply with the requirements in either § 63.120(b)(7)(i) or § 63.120(b)(7)(ii) of subpart G (only up to the compliance date specified in paragraph (h) of this section for

compliance with § 63.660, as applicable) or either § 63.1063(c)(2)(iv)(A) or § 63.1063(c)(2)(iv)(B) of subpart WW.

* * * * *

(10) Storage vessels described by paragraph (n)(1) of this section are to comply with 40 CFR part 61, subpart Y except as provided in paragraphs (n)(10)(i) through (n)(8)(vi) of this section. Storage vessels described by paragraph (n)(2) electing to comply with 40 CFR part 61, subpart Y shall comply with subpart Y except as provided for in paragraphs (n)(10)(i) through (n)(10)(viii) of this section.

(i) Storage vessels that are to comply with § 61.271(b) of this chapter are exempt from the secondary seal requirements of § 61.271(b)(2)(ii) of this chapter during the gap measurements for the primary seal required by § 61.272(b) of this chapter.

(ii) If the owner or operator determines that it is unsafe to perform the seal gap measurements required in § 61.272(b) of this chapter or to inspect the vessel to determine compliance with § 61.272(a) of this chapter because the roof appears to be structurally unsound and poses an imminent danger to inspecting personnel, the owner or operator shall comply with the requirements in either § 63.120(b)(7)(i) or § 63.120(b)(7)(ii) of subpart G (only up to the compliance date specified in paragraph (h) of this section for compliance with § 63.660, as applicable) or either § 63.1063(c)(2)(iv)(A) or § 63.1063(c)(2)(iv)(B) of subpart WW.

(iii) If a failure is detected during the inspections required by § 61.272(a)(2) of this chapter or during the seal gap measurements required by § 61.272(b)(1) of this chapter, and the vessel cannot be repaired within 45 days and the vessel cannot be emptied within 45 days, the owner or operator may utilize up to two extensions of up to 30 additional calendar days each. The owner or operator is not required to provide a request for the extension to the Administrator.

(iv) If an extension is utilized in accordance with paragraph (n)(10)(iii) of this section, the owner or operator shall, in the next periodic report, identify the vessel, provide the information listed in § 61.272(a)(2) or § 61.272(b)(4)(iii) of this chapter, and describe the nature and date of the repair made or provide the date the storage vessel was emptied.

(v) Owners and operators of storage vessels complying with 40 CFR part 61, subpart Y may submit the inspection reports required by § 61.275(a), (b)(1), and (d) of this chapter as part of the periodic reports required by this subpart, rather than within the 60-day period specified in § 61.275(a), (b)(1), and (d) of this chapter.

(vi) The reports of rim seal inspections specified in § 61.275(d) of this chapter are not required if none of the measured gaps or calculated gap areas exceed the limitations specified in § 61.272(b)(4) of this chapter. Documentation of the inspections shall be recorded as specified in § 61.276(a) of this chapter.

(vii) To be in compliance with § 61.271(b)(3) of this chapter, floating roof storage vessels must be equipped with guidepole controls as described in Appendix I: Acceptable Controls for Slotted Guidepoles Under the Storage Tank Emissions Reduction Partnership Program (available at *http://www.epa.gov/ttn/atw/petrefine/petrefpg.html*).

(viii) If a flare is used as a control device for a storage vessel, on and after [THE DATE 3 YEARS AFTER THE DATE OF PUBLICATION OF THE FINAL RULE AMENDMENTS IN THE **FEDERAL REGISTER**], the owner or operator must meet the requirements of § 63.670 instead of the requirements referenced from part 61, subpart Y of this chapter for that flare.

(o) * * *

(2) * * *

(i) Comply with paragraphs (o)(2)(i)(A) through (D) of this section.

* * * * *

(D) If a flare is used as a control device, on and after [THE DATE 3 YEARS AFTER THE DATE OF PUBLICATION OF THE FINAL RULE AMENDMENTS IN THE **FEDERAL REGISTER**], the flare shall meet the requirements of § 63.670. Prior to [THE DATE 3 YEARS AFTER THE DATE OF PUBLICATION OF THE FINAL RULE AMENDMENTS IN THE **FEDERAL REGISTER**], the flare shall meet the applicable requirements of 40 CFR part 61, subpart FF and subpart G of this part, or the requirements of § 63.670.

(ii) Comply with paragraphs (o)(2)(ii)(A) through (C) of this section.

* * * * *

(C) If a flare is used as a control device, on and after [THE DATE 3 YEARS AFTER THE DATE OF PUBLICATION OF THE FINAL RULE AMENDMENTS IN THE **FEDERAL REGISTER**], the flare shall meet the requirements of § 63.670. Prior to [THE DATE 3 YEARS AFTER THE DATE OF PUBLICATION OF THE FINAL RULE AMENDMENTS IN THE **FEDERAL REGISTER**], the flare shall meet the applicable requirements of 40 CFR part 61, subpart FF and subpart G of this part, or the requirements of § 63.670.

(p) * * *

(2) Equipment leaks that are also subject to the provisions of 40 CFR part 60, subpart GGGa, are required to comply only with the provisions specified in 40 CFR part 60, subpart GGGa. Owners and operators of equipment leaks that are subject to the provisions of 40 CFR part 60, subpart GGGa and subject to this subpart may elect to monitor equipment leaks following the provisions in § 63.661, provided that the equipment is in compliance with all other provisions of 40 CFR part 60, subpart GGGa.

* * * * *

■ 14. Section 63.641 is amended by:

■ a. Adding, in alphabetical order, new definitions of ''Assist air,'' ''Assist steam,'' ''Center steam,'' ''Closed blowdown system,'' ''Combustion zone,'' ''Combustion zone gas,'' ''Decoking operations,'' ''Delayed coking unit,'' ''Flare,'' ''Flare purge gas,'' ''Flare supplemental gas,'' ''Flare sweep gas,'' ''Flare vent gas,'' ''Halogenated vent stream or halogenated stream,'' ''Halogens and hydrogen halides,'' ''Lower steam,'' ''Net heating value,'' ''Perimeter assist air,'' ''Pilot gas,'' ''Premix assist air,'' ''Total steam,'' and ''Upper steam''; and

■ b. Revising the definitions of ''Delayed coker vent,'' ''Emission point,'' ''Group 1 storage vessel,'' ''Miscellaneous process vent,'' ''Periodically discharged,'' and ''Reference control technology for storage vessels''.

The revisions and additions read as follows:

§ 63.641 Definitions.

* * * * *

Assist air means all air that intentionally is introduced prior to or at a flare tip through nozzles or other hardware conveyance for the purposes including, but not limited to, protecting the design of the flare tip, promoting turbulence for mixing or inducing air into the flame. *Assist air* includes premix assist air and perimeter assist air. *Assist air* does not include the surrounding ambient air.

Assist steam means all steam that intentionally is introduced prior to or at a flare tip through nozzles or other hardware conveyance for the purposes including, but not limited to, protecting the design of the flare tip, promoting turbulence for mixing or inducing air into the flame. *Assist steam* includes, but is not necessarily limited to, center steam, lower steam and upper steam.

* * * * *

Center steam means the portion of assist steam introduced into the stack of a flare to reduce burnback.

Closed blowdown system means a system used for depressuring process vessels that is not open to the atmosphere and is configured of piping, ductwork, connections, accumulators/knockout drums, and, if necessary, flow inducing devices that transport gas or vapor from process vessel to a control device or back into the process.

* * * * *

Combustion zone means the area of the flare flame where the combustion zone gas combines for combustion.

Combustion zone gas means all gases and vapors found just after a flare tip. This gas includes all flare vent gas, total steam, and premix air.

* * * * *

Decoking operations means the sequence of steps conducted at the end of the delayed coking unit's cooling cycle to open the coke drum to the atmosphere in order to remove coke from the coke drum. *Decoking operations* begin at the end of the cooling cycle when steam released from the coke drum is no longer discharged via the delayed coker vent to the unit's blowdown system but instead is vented directly to the atmosphere. *Decoking operations* include atmospheric depressuring (venting), deheading, draining, and decoking (coke cutting).

Delayed coker vent means a vent that is typically intermittent in nature, and usually occurs only during the cooling cycle of a delayed coking unit coke drum when vapor from the coke drums cannot be sent to the fractionator column for product recovery, but instead is routed to the atmosphere through the delayed coking unit's blowdown system. The emissions from the decoking operations, which include direct atmospheric venting, deheading, draining, or decoking (coke cutting), are not considered to be *delayed coker vents.*

Delayed coking unit means a refinery process unit in which high molecular weight petroleum derivatives are thermally cracked and petroleum coke is produced in a series of closed, batch system reactors. A *delayed coking unit* includes, but is not limited to, all of the coke drums associated with a single fractionator; the fractionator, including the bottoms receiver and the overhead condenser; the coke drum cutting water and quench system, including the jet pump and coker quench water tank; and the coke drum blowdown recovery compressor system.

* * * * *

Emission point means an individual miscellaneous process vent, storage vessel, wastewater stream, equipment leak, decoking operation or heat exchange system associated with a petroleum refining process unit; an individual storage vessel or equipment leak associated with a bulk gasoline terminal or pipeline breakout station classified under Standard Industrial Classification code 2911; a gasoline loading rack classified under Standard Industrial Classification code 2911; or a marine tank vessel loading operation located at a petroleum refinery.

* * * * *

Flare means a combustion device lacking an enclosed combustion chamber that uses an uncontrolled volume of ambient air to burn gases. For the purposes of this rule, the definition of *flare* includes, but is not necessarily limited to, air-assisted flares, steam-assisted flares and non-assisted flares.

Flare purge gas means gas introduced between a flare header's water seal and the flare tip to prevent oxygen infiltration (backflow) into the flare tip. For a flare with no water seal, the function of *flare purge gas* is performed by flare sweep gas and, therefore, by definition, such a flare has no *flare purge gas.*

Flare supplemental gas means all gas introduced to the flare in order to improve the combustible characteristics of combustion zone gas.

Flare sweep gas means, for a flare with a flare gas recovery system, the minimum amount of gas necessary to maintain a constant flow of gas through the flare header in order to prevent oxygen buildup in the flare header; *flare sweep gas* in these flares is introduced prior to and recovered by the flare gas recovery system. For a flare without a flare gas recovery system, *flare sweep gas* means the minimum amount of gas necessary to maintain a constant flow of gas through the flare header and out the flare tip in order to prevent oxygen buildup in the flare header and to prevent oxygen infiltration (backflow) into the flare tip.

Flare vent gas means all gas found just prior to the flare tip. This gas includes all flare waste gas (*i.e.,* gas from facility operations that is directed to a flare for the purpose of disposing of the gas), flare sweep gas, flare purge gas and flare supplemental gas, but does not include pilot gas, total steam or assist air.

* * * * *

Group 1 storage vessel means:

(1) Prior to [THE DATE OF PUBLICATION OF THE FINAL RULE AMENDMENTS IN THE **FEDERAL REGISTER**]:

(i) A storage vessel at an existing source that has a design capacity greater than or equal to 177 cubic meters and stored-liquid maximum true vapor pressure greater than or equal to 10.4 kilopascals and stored-liquid annual average true vapor pressure greater than or equal to 8.3 kilopascals and annual average HAP liquid concentration greater than 4 percent by weight total organic HAP;

(ii) A storage vessel at a new source that has a design storage capacity greater than or equal to 151 cubic meters and stored-liquid maximum true vapor pressure greater than or equal to 3.4 kilopascals and annual average HAP liquid concentration greater than 2 percent by weight total organic HAP; or

(iii) A storage vessel at a new source that has a design storage capacity greater than or equal to 76 cubic meters and less than 151 cubic meters and stored-liquid maximum true vapor pressure greater than or equal to 77 kilopascals and annual average HAP liquid concentration greater than 2 percent by weight total organic HAP.

(2) On and after [THE DATE OF PUBLICATION OF THE FINAL RULE AMENDMENTS IN THE **FEDERAL REGISTER**]:

(i) A storage vessel at an existing source that has a design capacity greater than or equal to 151 cubic meters (40,000 gallons) and stored-liquid maximum true vapor pressure greater than or equal to 5.2 kilopascals (0.75 pounds per square inch) and annual average HAP liquid concentration greater than 4 percent by weight total organic HAP;

(ii) A storage vessel at an existing source that has a design storage capacity greater than or equal to 76 cubic meters (20,000 gallons) and less than 151 cubic meters (40,000 gallons) and stored-liquid maximum true vapor pressure greater than or equal to 13.1 kilopascals (1.9 pounds per square inch) and annual average HAP liquid concentration greater than 4 percent by weight total organic HAP;

(iii) A storage vessel at a new source that has a design storage capacity greater than or equal to 151 cubic meters (40,000 gallons) and stored-liquid maximum true vapor pressure greater than or equal to 3.4 kilopascals (0.5 pounds per square inch) and annual average HAP liquid concentration greater than 2 percent by weight total organic HAP; or

(iv) A storage vessel at a new source that has a design storage capacity greater than or equal to 76 cubic meters (20,000 gallons) and less than 151 cubic meters (40,000 gallons) and stored-liquid maximum true vapor pressure greater than or equal to 13.1 kilopascals (1.9 pounds per square inch) and annual average HAP liquid concentration

greater than 2 percent by weight total organic HAP.

* * * * *

Halogenated vent stream or *halogenated stream* means a stream determined to have a mass rate of halogen atoms of 0.45 kilograms per hour or greater, determined by the procedures presented in § 63.115(d)(2)(v). The following procedures may be used as alternatives to the procedures in § 63.115(d)(2)(v)(A):

(1) Process knowledge that halogen or hydrogen halides are present in a vent stream and that the vent stream is halogenated, or

(2) Concentration of compounds containing halogen and hydrogen halides measured by Method 26 or 26A of part 60, Appendix A–8 of this chapter, or

(3) Concentration of compounds containing hydrogen halides measured by Method 320 of Appendix A of this part.

Halogens and *hydrogen halides* means hydrogen chloride (HCl), chlorine (Cl_2), hydrogen bromide (HBr), bromine (Br_2), and hydrogen fluoride (HF).

* * * * *

Lower steam means the portion of assist steam piped to an exterior annular ring near the lower part of a flare tip, which then flows through tubes to the flare tip, and ultimately exits the tubes at the flare tip.

* * * * *

Miscellaneous process vent means a gas stream containing greater than 20 parts per million by volume organic HAP that is continuously or periodically discharged from a petroleum refining process unit meeting the criteria specified in § 63.640(a). *Miscellaneous process vents* include gas streams that are discharged directly to the atmosphere, gas streams that are routed to a control device prior to discharge to the atmosphere, or gas streams that are diverted through a product recovery device prior to control or discharge to the atmosphere. *Miscellaneous process vents* include vent streams from: caustic wash accumulators, distillation tower condensers/accumulators, flash/knockout drums, reactor vessels, scrubber overheads, stripper overheads, vacuum pumps, steam ejectors, hot wells, high point bleeds, wash tower overheads, water wash accumulators, blowdown condensers/accumulators, and delayed coker vents. *Miscellaneous process vents* do not include:

(1) Gaseous streams routed to a fuel gas system, provided that on and after [THE DATE 3 YEARS AFTER THE DATE OF PUBLICATION OF THE FINAL RULE AMENDMENTS IN THE **FEDERAL REGISTER**], any flares receiving gas from the fuel gas system are in compliance with § 63.670;

(2) Relief valve discharges regulated under § 63.648;

(3) Leaks from equipment regulated under § 63.648;

(4) [Reserved];

(5) In situ sampling systems (onstream analyzers) until [THE DATE 3 YEARS AFTER THE DATE OF PUBLICATION OF THE FINAL RULE AMENDMENTS IN THE **FEDERAL REGISTER**]. After this date, these sampling systems will be included in the definition of miscellaneous process vents;

(6) Catalytic cracking unit catalyst regeneration vents;

(7) Catalytic reformer regeneration vents;

(8) Sulfur plant vents;

(9) Vents from control devices such as scrubbers, boilers, incinerators, and electrostatic precipitators applied to catalytic cracking unit catalyst regeneration vents, catalytic reformer regeneration vents, and sulfur plant vents;

(10) Vents from any stripping operations applied to comply with the wastewater provisions of this subpart, subpart G of this part, or 40 CFR part 61, subpart FF;

(11) Emissions associated with delayed coking unit decoking operations;

(12) Vents from storage vessels;

(13) Emissions from wastewater collection and conveyance systems including, but not limited to, wastewater drains, sewer vents, and sump drains; and

(14) Hydrogen production plant vents through which carbon dioxide is removed from process streams or through which steam condensate produced or treated within the hydrogen plant is degassed or deaerated.

Net heating value means the energy released as heat when a compound undergoes complete combustion with oxygen to form gaseous carbon dioxide and gaseous water (also referred to as lower heating value).

* * * * *

Perimeter assist air means the portion of assist air introduced at the perimeter of the flare tip or above the flare tip. *Perimeter assist air* includes air intentionally entrained in lower and upper steam. *Perimeter assist air* includes all assist air except premix assist air.

Periodically discharged means discharges that are intermittent and associated with routine operations, maintenance activities, startups, shutdowns, malfunctions, or process upsets.

* * * * *

Pilot gas means gas introduced into a flare tip that provides a flame to ignite the flare vent gas.

* * * * *

Premix assist air means the portion of assist air that is introduced to the flare vent gas prior to the flare tip. *Premix assist air* also includes any air intentionally entrained in center steam.

* * * * *

Reference control technology for storage vessels means either:

(1) For Group 1 storage vessels complying with § 63.660:

(i) An internal floating roof meeting the specifications of §§ 63.1063(a)(1)(i) and (b);

(ii) An external floating roof meeting the specifications of § 63.1063(a)(1)(ii), (a)(2), and (b);

(iii) An external floating roof converted to an internal floating roof meeting the specifications of § 63.1063(a)(1)(i) and (b); or

(iv) A closed-vent system to a control device that reduces organic HAP emissions by 95 percent, or to an outlet concentration of 20 parts per million by volume (ppmv).

(v) For purposes of emissions averaging, these four technologies are considered equivalent.

(2) For all other storage vessels:

(i) An internal floating roof meeting the specifications of § 63.119(b) of subpart G except for § 63.119(b)(5) and (b)(6);

(ii) An external floating roof meeting the specifications of § 63.119(c) of subpart G except for § 63.119(c)(2);

(iii) An external floating roof converted to an internal floating roof meeting the specifications of § 63.119(d) of subpart G except for § 63.119(d)(2); or

(iv) A closed-vent system to a control device that reduces organic HAP emissions by 95 percent, or to an outlet concentration of 20 parts per million by volume.

(v) For purposes of emissions averaging, these four technologies are considered equivalent.

* * * * *

Total steam means the total of all steam that is supplied to a flare and includes, but is not limited to, lower steam, center steam and upper steam.

Upper steam means the portion of assist steam introduced via nozzles located on the exterior perimeter of the upper end of the flare tip.

* * * * *

■ 15. Section 63.642 is amended by:

■ a. Adding paragraph (b);

■ b. Revising paragraph (d)(3);

■ c. Revising paragraph (e);
■ d. Revising paragraph (i);
■ e. Revising paragraph (k) introductory text;
■ f. Revising paragraph (k)(1);
■ g. Revising paragraph (l) introductory text;
■ h. Revising paragraph (l)(2); and
■ i. Adding paragraph (n).

The revisions and additions read as follows:

§ 63.642 General standards.

* * * * *

(b) The emission standards set forth in this subpart shall apply at all times.

* * * * *

(d) * * *

(3) Performance tests shall be conducted at maximum representative operating capacity for the process. During the performance test, an owner or operator shall operate the control device at either maximum or minimum representative operating conditions for monitored control device parameters, whichever results in lower emission reduction. An owner or operator shall not conduct a performance test during startup, shutdown, periods when the control device is bypassed or periods when the process, monitoring equipment or control device is not operating properly. The owner/operator may not conduct performance tests during periods of malfunction. The owner or operator must record the process information that is necessary to document operating conditions during the test and include in such record an explanation to support that the test was conducted at maximum representative operating capacity. Upon request, the owner or operator shall make available to the Administrator such records as may be necessary to determine the conditions of performance tests.

* * * * *

(e) All applicable records shall be maintained as specified in § 63.655(i).

* * * * *

(i) The owner or operator of an existing source shall demonstrate compliance with the emission standard in paragraph (g) of this section by following the procedures specified in paragraph (k) of this section for all emission points, or by following the emissions averaging compliance approach specified in paragraph (l) of this section for specified emission points and the procedures specified in paragraph (k)(1) of this section.

* * * * *

(k) The owner or operator of an existing source may comply, and the owner or operator of a new source shall comply, with the applicable provisions in §§ 63.643 through 63.645, 63.646 or 63.660, 63.647, 63.650, and 63.651, as specified in § 63.640(h).

(1) The owner or operator using this compliance approach shall also comply with the requirements of §§ 63.648 and/or 63.649 or 63.661, 63.654, 63.655, 63.657, 63.658, 63.670 and 63.671, as applicable.

* * * * *

(l) The owner or operator of an existing source may elect to control some of the emission points within the source to different levels than specified under §§ 63.643 through 63.645, 63.646 or 63.660, 63.647, 63.650, and 63.651, as applicable according to § 63.640(h), by using an emissions averaging compliance approach as long as the overall emissions for the source do not exceed the emission level specified in paragraph (g) of this section. The owner or operator using emissions averaging shall meet the requirements in paragraphs (l)(1) and (2) of this section.

* * * * *

(2) Comply with the requirements of §§ 63.648 and/or 63.649 or 63.661, 63.654, 63.652, 63.653, 63.655, 63.657, 63.658, 63.670 and 63.671, as applicable.

* * * * *

(n) At all times, the owner or operator must operate and maintain any affected source, including associated air pollution control equipment and monitoring equipment, in a manner consistent with safety and good air pollution control practices for minimizing emissions. The general duty to minimize emissions does not require the owner operator to make any further efforts to reduce emissions if levels required by the applicable standard have been achieved. Determination of whether a source is operating in compliance with operation and maintenance requirements will be based on information available to the Administrator which may include, but is not limited to, monitoring results, review of operation and maintenance procedures, review of operation and maintenance records, and inspection of the source.

■ 16. Section 63.643 is amended by revising paragraph (a)(1) to read as follows:

§ 63.643 Miscellaneous process vent provisions.

(a) * * *

(1) Reduce emissions of organic HAP's using a flare. On and after [THE DATE 3 YEARS AFTER THE DATE OF PUBLICATION OF THE FINAL RULE AMENDMENTS IN THE **FEDERAL REGISTER**], the flare shall meet the requirements of § 63.670. Prior to [THE DATE 3 YEARS AFTER THE DATE OF PUBLICATION OF THE FINAL RULE AMENDMENTS IN THE **FEDERAL REGISTER**], the flare shall meet the requirements of § 63.11(b) of subpart A or the requirements of § 63.670.

* * * * *

■ 17. Section 63.644 is amended by:
■ a. Revising paragraph (a) introductory text;
■ b. Revising paragraph (a)(2); and
■ c. Revising paragraph (c).

The revisions read as follows:

§ 63.644 Monitoring provisions for miscellaneous process vents.

(a) Except as provided in paragraph (b) of this section, each owner or operator of a Group 1 miscellaneous process vent that uses a combustion device to comply with the requirements in § 63.643(a) shall install the monitoring equipment specified in paragraph (a)(1), (a)(2), (a)(3), or (a)(4) of this section, depending on the type of combustion device used. All monitoring equipment shall be installed, calibrated, maintained, and operated according to manufacturer's specifications or other written procedures that provide adequate assurance that the equipment will monitor accurately and must meet the applicable minimum accuracy, calibration and quality control requirements specified in table 13 of this subpart.

* * * * *

(2) Where a flare is used prior to [THE DATE 3 YEARS AFTER THE DATE OF PUBLICATION OF THE FINAL RULE AMENDMENTS IN THE **FEDERAL REGISTER**], a device (including but not limited to a thermocouple, an ultraviolet beam sensor, or an infrared sensor) capable of continuously detecting the presence of a pilot flame is required, or the requirements of § 63.670 shall be met. Where a flare is used on and after [THE DATE 3 YEARS AFTER THE DATE OF PUBLICATION OF THE FINAL RULE AMENDMENTS IN THE **FEDERAL REGISTER**], the requirements of § 63.670 shall be met.

* * * * *

(c) The owner or operator of a Group 1 miscellaneous process vent using a vent system that contains bypass lines that could divert a vent stream away from the control device used to comply with paragraph (a) of this section shall comply with either paragraph (c)(1) or (2) of this section. Use of the bypass at any time to divert a Group 1 miscellaneous process vent stream is an emissions standards violation. Equipment such as low leg drains and equipment subject to § 63.648 are not subject to this paragraph.

(1) Install, operate, calibrate, and maintain a continuous parameter monitoring system for flow, as specified in paragraphs (c)(1)(i) through (iii) of this section.

(i) Install a continuous parameter monitoring system for flow at the entrance to any bypass line. The continuous parameter monitoring system must record the volume of the gas stream that bypassed the control device and must meet the applicable minimum accuracy, calibration and quality control requirements specified in table 13 of this subpart.

(ii) Equip the continuous parameter monitoring system for flow with an alarm system that will alert an operator immediately and automatically when flow is detected in the bypass line. Locate the alarm such that an operator can easily detect and recognize the alert.

(iii) Reports and records shall be generated as specified in § 63.655(g) and (i).

(2) Secure the bypass line valve in the non-diverting position with a car-seal or a lock-and-key type configuration. A visual inspection of the seal or closure mechanism shall be performed at least once every month to ensure that the valve is maintained in the non-diverting position and that the vent stream is not diverted through the bypass line.

* * * * *

■ 18. Section 63.645 is amended by revising paragraphs (e)(1) and (f)(2) to read as follows:

§ 63.645 Test methods and procedures for miscellaneous process vents.

* * * * *

(e) * * *

(1) Methods 1 or 1A of 40 CFR part 60, Appendix A–1, as appropriate, shall be used for selection of the sampling site. For vents smaller than 0.10 meter in diameter, sample at the center of the vent.

* * * * *

(f) * * *

(2) The gas volumetric flow rate shall be determined using Methods 2, 2A, 2C, 2D, or 2F of 40 CFR part 60, Appendix A–1 or Method 2G of 40 CFR part 60, Appendix A–2, as appropriate.

* * * * *

■ 19. Section 63.646 is amended by:

■ a. Adding introductory text to § 63.646; and

■ b. Revising paragraph (b)(2).

The revisions and additions read as follows:

§ 63.646 Storage vessel provisions.

Upon a demonstration of compliance with the standards in § 63.660 by the compliance dates specified in § 63.640(h), the standards in this section shall no longer apply.

* * * * *

(b) * * *

(2) When an owner or operator and the Administrator do not agree on whether the annual average weight percent organic HAP in the stored liquid is above or below 4 percent for a storage vessel at an existing source or above or below 2 percent for a storage vessel at a new source, an appropriate method (based on the type of liquid stored) as published by EPA or a consensus-based standards organization shall be used. Consensus-based standards organizations include, but are not limited to, the following: ASTM International (100 Barr Harbor Drive, P.O. Box CB700, West Conshohocken, Pennsylvania 19428–B2959, (800) 262–1373, *http://www.astm.org*), the American National Standards Institute (ANSI, 1819 L Street NW., 6th Floor, Washington, DC 20036, (202) 293–8020, *http://www.ansi.org*), the American Gas Association (AGA, 400 North Capitol Street NW., 4th Floor, Washington, DC 20001, (202) 824–7000, *http://www.aga.org*), the American Society of Mechanical Engineers (ASME, Three Park Avenue, New York, NY 10016–5990, (800) 843–2763, *http://www.asme.org*), the American Petroleum Institute (API, 1220 L Street NW., Washington, DC 20005–4070, (202) 682–8000, *http://www.api.org*), and the North American Energy Standards Board (NAESB, 801 Travis Street, Suite 1675, Houston, TX 77002, (713) 356–0060, *http://www.naesb.org*).

* * * * *

■ 20. Section 63.647 is amended by:

■ a. Revising paragraph (a);

■ b. Redesignating paragraph (c) as paragraph (d); and

■ c. Adding paragraph (c).

The revisions and additions read as follows:

§ 63.647 Wastewater provisions.

(a) Except as provided in paragraphs (b) and (c) of this section, each owner or operator of a Group 1 wastewater stream shall comply with the requirements of §§ 61.340 through 61.355 of this chapter for each process wastewater stream that meets the definition in § 63.641.

* * * * *

(c) If a flare is used as a control device, on and after [THE DATE 3 YEARS AFTER THE DATE OF PUBLICATION OF THE FINAL RULE AMENDMENTS IN THE **FEDERAL REGISTER**], the flare shall meet the requirements of § 63.670. Prior to [THE DATE 3 YEARS AFTER THE DATE OF PUBLICATION OF THE FINAL RULE AMENDMENTS IN THE **FEDERAL REGISTER**], the flare shall meet the applicable requirements of part 61, subpart FF of this chapter, or the requirements of § 63.670.

* * * * *

■ 21. Section 63.648 is amended by:

■ a. Revising paragraph (a) introductory text;

■ b. Adding paragraphs (a)(3) and (4);

■ c. Revising paragraph (c) introductory text;

■ d. Revising paragraph (c)(2)(ii);

■ e. Adding paragraphs (c)(11) and (12); and

■ f. Adding paragraph (j).

The revisions and additions read as follows:

§ 63.648 Equipment leak standards.

(a) Each owner or operator of an existing source subject to the provisions of this subpart shall comply with the provisions of part 60, subpart VV of this chapter and paragraph (b) of this section except as provided in paragraphs (a)(1), (a)(2), and (c) through (i) of this section. Each owner or operator of a new source subject to the provisions of this subpart shall comply with subpart H of this part except as provided in paragraphs (c) through (i) of this section. As an alternative to the monitoring requirements of part 60, subpart VV of this chapter or subpart H of this part, as applicable, the owner or operator may elect to monitor equipment leaks following the provisions in § 63.661.

* * * * *

(3) On and after [THE DATE OF PUBLICATION OF THE FINAL RULE AMENDMENTS IN THE **FEDERAL REGISTER**], for the purpose of complying with the requirements of § 60.482–6(a)(2) of this chapter, the term ''seal'' or ''sealed'' means that instrument monitoring of the open-ended valve or line conducted according to the method specified in § 60.485(b) and, as applicable, § 60.485(c) of this chapter indicates no readings of 500 parts per million or greater.

(4) If a flare is used as a control device, on and after [THE DATE 3 YEARS AFTER THE DATE OF PUBLICATION OF THE FINAL RULE AMENDMENTS IN THE **FEDERAL REGISTER**], the flare shall meet the requirements of § 63.670. Prior to [THE DATE 3 YEARS AFTER THE DATE OF PUBLICATION OF THE FINAL RULE AMENDMENTS IN THE **FEDERAL REGISTER**], the flare shall meet the applicable requirements of part 60, subpart VV of this chapter, or the requirements of § 63.670.

* * * * *

(c) In lieu of complying with the existing source provisions of paragraph (a) in this section, an owner or operator may elect to comply with the requirements of §§ 63.161 through 63.169, 63.171, 63.172, 63.175, 63.176, 63.177, 63.179, and 63.180 of subpart H of this part except as provided in paragraphs (c)(1) through (c)(12) and (e) through (i) of this section.

* * * * *

(2) * * *

(ii) If an owner or operator elects to monitor connectors according to the provisions of § 63.649, paragraphs (b), (c), or (d), then the owner or operator shall monitor valves at the frequencies specified in table 9 of this subpart. If an owner or operator elects to comply with § 63.649, the owner or operator cannot also elect to comply with § 63.661.

* * * * *

(11) On and after [THE DATE OF PUBLICATION OF THE FINAL RULE AMENDMENTS IN THE **FEDERAL REGISTER**], for the purpose of complying with the requirements of § 63.167(a)(2), the term ''seal'' or ''sealed'' means that instrument monitoring of the open-ended valve or line conducted according to the method specified in § 63.180(b) and, as applicable, § 63.180(c) of this chapter indicates no readings of 500 parts per million or greater.

(12) If a flare is used as a control device, on and after [THE DATE 3 YEARS AFTER THE DATE OF PUBLICATION OF THE FINAL RULE AMENDMENTS IN THE **FEDERAL REGISTER**], the flare shall meet the requirements of § 63.670. Prior to [THE DATE 3 YEARS AFTER THE DATE OF PUBLICATION OF THE FINAL RULE AMENDMENTS IN THE **FEDERAL REGISTER**], the flare shall meet the applicable requirements of §§ 63.172 and 63.180, or the requirements of § 63.670.

* * * * *

(j) Except as specified in paragraph (j)(4) of this section, the owner or operator must comply with the requirements specified in paragraphs (j)(1) and (2) of this section for relief valves in organic HAP gas or vapor service instead of the pressure relief device requirements of § 60.482–4 or § 63.165, as applicable. Except as specified in paragraph (j)(4) of this section, the owner or operator must also comply with the requirements specified in paragraph (j)(3) of this section for all relief valves in organic HAP service.

(1) *Operating requirements.* Except during a pressure release, operate each relief valve in organic HAP gas or vapor service with an instrument reading of less than 500 ppm above background as detected by Method 21 of 40 CFR part 60, Appendix A–7.

(2) *Pressure release requirements.* For relief valves in organic HAP gas or vapor service, the owner or operator must comply with either paragraph (j)(2)(i) or (ii) of this section following a pressure release.

(i) If the relief valve does not consist of or include a rupture disk, conduct instrument monitoring, as specified in § 60.485(b) or § 63.180(c), as applicable, no later than 5 calendar days after the relief valve returns to organic HAP gas or vapor service following a pressure release to verify that the relief valve is operating with an instrument reading of less than 500 ppm.

(ii) If the relief valve consists of or includes a rupture disk, install a replacement disk as soon as practicable after a pressure release, but no later than 5 calendar days after the pressure release. The owner or operator must also conduct instrument monitoring, as specified in § 60.485(b) or § 63.180(c), as applicable, no later than 5 calendar days after the relief valve returns to organic HAP gas or vapor service following a pressure release to verify that the relief valve is operating with an instrument reading of less than 500 ppm.

(3) *Pressure release management.* Except as specified in paragraph (j)(4) of this section, emissions of organic HAP may not be discharged to the atmosphere from relief valves in organic HAP service, and on or before [THE DATE 3 YEARS AFTER THE DATE OF PUBLICATION OF THE FINAL RULE AMENDMENTS IN THE **FEDERAL REGISTER**], the owner or operator shall comply with the requirements specified in paragraphs (j)(3)(i) and (ii) of this section for all relief valves in organic HAP service.

(i) The owner or operator must equip each relief valve in organic HAP service with a device(s) or use a monitoring system that is capable of: (1) Identifying the pressure release; (2) recording the time and duration of each pressure release; and (3) notifying operators immediately that a pressure release is occurring. The device or monitoring system may be either specific to the pressure relief device itself or may be associated with the process system or piping, sufficient to indicate a pressure release to the atmosphere. Examples of these types of devices and systems include, but are not limited to, a rupture disk indicator, magnetic sensor, motion detector on the pressure relief valve stem, flow monitor, or pressure monitor.

(ii) If any relief valve in organic HAP service vents or releases to atmosphere as a result of a pressure release event, the owner or operator must calculate the quantity of organic HAP released during each pressure release event and report this quantity as required in § 63.655(g)(10)(iii). Calculations may be based on data from the relief valve monitoring alone or in combination with process parameter monitoring data and process knowledge.

(4) *Relief valves routed to a control device.* If all releases and potential leaks from a relief valve in organic HAP service are routed through a closed vent system to a control device, the owner or operator is not required to comply with paragraphs (j)(1), (2) or (3) (if applicable) of this section. Both the closed vent system and control device (if applicable) must meet the requirements of § 63.644. When complying with this paragraph, all references to ''Group 1 miscellaneous process vent'' in 63.644 mean ''relief valve.''

■ 22. Section 63.650 is amended by revising paragraph (a) and adding paragraph (d) to read as follows:

§ 63.650 Gasoline loading rack provisions.

(a) Except as provided in paragraphs (b) through (d) of this section, each owner or operator of a Group 1 gasoline loading rack classified under Standard Industrial Classification code 2911 located within a contiguous area and under common control with a petroleum refinery shall comply with subpart R, §§ 63.421, 63.422(a) through (c) and (e), 63.425(a) through (c) and (i), 63.425(e) through (h), 63.427(a) and (b), and 63.428(b), (c), (g)(1), (h)(1) through (3), and (k).

* * * * *

(d) If a flare is used as a control device, on and after [THE DATE 3 YEARS AFTER THE DATE OF PUBLICATION OF THE FINAL RULE AMENDMENTS IN THE **FEDERAL REGISTER**], the flare shall meet the requirements of § 63.670. Prior to [THE DATE 3 YEARS AFTER THE DATE OF PUBLICATION OF THE FINAL RULE AMENDMENTS IN THE **FEDERAL REGISTER**], the flare shall meet the applicable requirements of subpart R of this part, or the requirements of § 63.670.

■ 23. Section 63.651 is amended by revising paragraph (a) and adding paragraph (e) to read as follows:

§ 63.651 Marine tank vessel loading operation provisions.

(a) Except as provided in paragraphs (b) through (e) of this section, each owner or operator of a marine tank vessel loading operation located at a petroleum refinery shall comply with

the requirements of §§ 63.560 through 63.568.

* * * * *

(e) If a flare is used as a control device, on and after [THE DATE 3 YEARS AFTER THE DATE OF PUBLICATION OF THE FINAL RULE AMENDMENTS IN THE **FEDERAL REGISTER**], the flare shall meet the requirements of § 63.670. Prior to [THE DATE 3 YEARS AFTER THE DATE OF PUBLICATION OF THE FINAL RULE AMENDMENTS IN THE **FEDERAL REGISTER**], the flare shall meet the applicable requirements of subpart Y of this part, or the requirements of § 63.670.

■ 24. Section 63.652 is amended by:

■ a. Revising paragraph (a);

■ b. Removing and reserving paragraph (f)(2);

■ c. Revising paragraph (g)(2)(iii)(B)(*1*);

■ d. Revising paragraph (h)(3);

■ e. Revising paragraph (k) introductory text; and

■ f. Revising paragraph (k)(3).

The revisions and additions read as follows:

§ 63.652 Emissions averaging provisions.

(a) This section applies to owners or operators of existing sources who seek to comply with the emission standard in § 63.642(g) by using emissions averaging according to § 63.642(l) rather than following the provisions of §§ 63.643 through 63.645, 63.646 or 63.660, 63.647, 63.650, and 63.651. Existing marine tank vessel loading operations located at the Valdez Marine Terminal source may not comply with the standard by using emissions averaging.

* * * * *

(g) * * *

(2) * * *

(iii) * * *

(B) * * *

(*1*) The percent reduction shall be measured according to the procedures in § 63.116 of subpart G if a combustion control device is used. For a flare meeting the criteria in § 63.116(a) of subpart G or § 63.670 of this subpart, as applicable, or a boiler or process heater meeting the criteria in § 63.645(d) of this subpart or § 63.116(b) of subpart G, the percentage of reduction shall be 98 percent. If a noncombustion control device is used, percentage of reduction shall be demonstrated by a performance test at the inlet and outlet of the device, or, if testing is not feasible, by a control design evaluation and documented engineering calculations.

* * * * *

(h) * * *

(3) Emissions from storage vessels shall be determined as specified in § 63.150(h)(3) of subpart G, except as follows:

(i) For storage vessels complying with § 63.646:

(A) All references to § 63.119(b) in § 63.150(h)(3) of subpart G shall be replaced with: § 63.119(b) or § 63.119(b) except for § 63.119(b)(5) and (b)(6).

(B) All references to § 63.119(c) in § 63.150(h)(3) of subpart G shall be replaced with: § 63.119(c) or § 63.119(c) except for § 63.119(c)(2).

(C) All references to § 63.119(d) in § 63.150(h)(3) of subpart G shall be replaced with: § 63.119(d) or § 63.119(d) except for § 63.119(d)(2).

(ii) For storage vessels complying with § 63.660:

(A) Sections 63.1063(a)(1)(i), (a)(2), and (b) or §§ 63.1063(a)(1)(i) and (b) shall apply instead of § 63.119(b) in § 63.150(h)(3) of subpart G.

(B) Sections 63.1063(a)(1)(ii), (a)(2), and (b) shall apply instead of § 63.119(c) in § 63.150(h)(3) of subpart G.

(C) Sections 63.1063(a)(1)(i), (a)(2), and (b) or §§ 63.1063(a)(1)(i) and (b) shall apply instead of § 63.119(d) in § 63.150(h)(3) of subpart G.

* * * * *

(k) The owner or operator shall demonstrate that the emissions from the emission points proposed to be included in the average will not result in greater hazard or, at the option of the State or local permitting authority, greater risk to human health or the environment than if the emission points were controlled according to the provisions in §§ 63.643 through 63.645, 63.646 or 63.660, 63.647, 63.650, and 63.651, as applicable.

* * * * *

(3) An emissions averaging plan that does not demonstrate an equivalent or lower hazard or risk to the satisfaction of the State or local permitting authority shall not be approved. The State or local permitting authority may require such adjustments to the emissions averaging plan as are necessary in order to ensure that the average will not result in greater hazard or risk to human health or the environment than would result if the emission points were controlled according to §§ 63.643 through 63.645, 63.646 or 63.660, 63.647, 63.650, and 63.651, as applicable.

* * * * *

■ 25. Section 63.653 is amended by:

■ a. Revising paragraph (a) introductory text;

■ b. Revising paragraphs (a)(3)(i) and (ii); and

■ c. Revising paragraph (a)(7).

The revisions read as follows:

§ 63.653 Monitoring, recordkeeping, and implementation plan for emissions averaging.

(a) For each emission point included in an emissions average, the owner or operator shall perform testing, monitoring, recordkeeping, and reporting equivalent to that required for Group 1 emission points complying with §§ 63.643 through 63.645, 63.646 or 63.660, 63.647, 63.650, and 63.651, as applicable. The specific requirements for miscellaneous process vents, storage vessels, wastewater, gasoline loading racks, and marine tank vessels are identified in paragraphs (a)(1) through (7) of this section.

* * * * *

(3) * * *

(i) Perform the monitoring or inspection procedures in § 63.646 and either § 63.120 of subpart G or § 63.1063 of subpart WW, as applicable; and

(ii) For closed vent systems with control devices, conduct an initial design evaluation as specified in § 63.646 and either § 63.120(d) of subpart G or § 63.985(b) of subpart SS, as applicable.

* * * * *

(7) If an emission point in an emissions average is controlled using a pollution prevention measure or a device or technique for which no monitoring parameters or inspection procedures are specified in §§ 63.643 through 63.645, 63.646 or 63.660, 63.647, 63.650, and 63.651, as applicable, the owner or operator shall establish a site-specific monitoring parameter and shall submit the information specified in § 63.655(h)(4) in the Implementation Plan.

* * * * *

■ 26. Section 63.655 is amended by:

■ a. Revising paragraph (f) introductory text;

■ b. Revising paragraph (f)(1) introductory text;

■ c. Revising paragraph (f)(1)(i)(A) introductory text;

■ d. Revising paragraphs (f)(1)(i)(A)(*2*) and (*3*);

■ e. Revising paragraph (f)(1)(i)(B) introductory text;

■ f. Revising paragraph (f)(1)(i)(B)(*2*);

■ g. Revising paragraph (f)(1)(i)(D)(*2*);

■ h. Revising paragraph (f)(1)(iv) introductory text;

■ i. Revising paragraph (f)(1)(iv)(A);

■ j. Adding paragraph (f)(1)(vii);

■ k. Revising paragraph (f)(2) introductory text;

■ l. Revising paragraph (f)(3) introductory text;

■ m. Revising paragraph (f)(6);

■ n. Revising paragraph (g) introductory text;

■ o. Revising paragraphs (g)(1) through (5);
■ p. Revising paragraph (g)(6)(iii);
■ q. Revising paragraph (g)(7)(i);
■ r. Adding paragraphs (g)(10) through (13);
■ s. Removing and reserving paragraph (h)(1);
■ t. Revising paragraph (h)(2) introductory text;
■ u. Revising paragraph (h)(2)(i)(B);
■ v. Revising paragraph (h)(2)(ii);
■ w. Adding paragraphs (h)(8) and (9);
■ x. Adding paragraph (i) introductory text;
■ y. Revising paragraph (i)(1) introductory text;
■ z. Revising paragraph (i)(1)(ii);
■ aa. Adding paragraphs (i)(1)(v) and (vi);
■ bb. Redesignating paragraph (i)(4) and (5) as (i)(5) and (6) respectively;
■ cc. Adding paragraph (i)(4);
■ dd. Revising newly redesignated paragraph (i)(5) introductory text; and
■ ee. Adding paragraphs (i)(7) through (11).

The revisions and additions read as follows:

§ 63.655 Reporting and recordkeeping requirements.

* * * * *

(f) Each owner or operator of a source subject to this subpart shall submit a Notification of Compliance Status report within 150 days after the compliance dates specified in § 63.640(h) with the exception of Notification of Compliance Status reports submitted to comply with § 63.640(l)(3) and for storage vessels subject to the compliance schedule specified in § 63.640(h)(2). Notification of Compliance Status reports required by § 63.640(l)(3) and for storage vessels subject to the compliance dates specified in § 63.640(h)(2) shall be submitted according to paragraph (f)(6) of this section. This information may be submitted in an operating permit application, in an amendment to an operating permit application, in a separate submittal, or in any combination of the three. If the required information has been submitted before the date 150 days after the compliance date specified in § 63.640(h), a separate Notification of Compliance Status report is not required within 150 days after the compliance dates specified in § 63.640(h). If an owner or operator submits the information specified in paragraphs (f)(1) through (f)(5) of this section at different times, and/or in different submittals, later submittals may refer to earlier submittals instead of duplicating and resubmitting the previously submitted information. Each owner or operator of a gasoline loading rack classified under Standard Industrial Classification Code 2911 located within a contiguous area and under common control with a petroleum refinery subject to the standards of this subpart shall submit the Notification of Compliance Status report required by subpart R of this part within 150 days after the compliance dates specified in § 63.640(h) of this subpart.

(1) The Notification of Compliance Status report shall include the information specified in paragraphs (f)(1)(i) through (f)(1)(vii) of this section.

(i) * * *

(A) Identification of each storage vessel subject to this subpart, and for each Group 1 storage vessel subject to this subpart, the information specified in paragraphs (f)(1)(i)(A)(*1*) through (f)(1)(i)(A)(*3*) of this section. This information is to be revised each time a Notification of Compliance Status report is submitted for a storage vessel subject to the compliance schedule specified in § 63.640(h)(2) or to comply with § 63.640(l)(3).

* * * * *

(*2*) For storage vessels subject to the compliance schedule specified in § 63.640(h)(2) that are not complying with § 63.646, the anticipated compliance date.

(*3*) For storage vessels subject to the compliance schedule specified in § 63.640(h)(2) that are complying with § 63.646 and the Group 1 storage vessels described in § 63.640(l), the actual compliance date.

(B) If a closed vent system and a control device other than a flare is used to comply with § 63.646 or § 63.660, the owner or operator shall submit:

* * * * *

(*2*) The design evaluation documentation specified in § 63.120(d)(1)(i) of subpart G or § 63.985(b)(1)(i) of subpart SS (as applicable), if the owner or operator elects to prepare a design evaluation; or

* * * * *

(D) * * *

(*2*) All visible emission readings, heat content determinations, flow rate measurements, and exit velocity determinations made during the compliance determination required by § 63.120(e) of subpart G or § 63.987(b) of subpart SS or § 63.670(h), as applicable; and

* * * * *

(iv) For miscellaneous process vents controlled by flares, initial compliance test results including the information in paragraphs (f)(1)(iv)(A) and (B) of this section;

(A) All visible emission readings, heat content determinations, flow rate measurements, and exit velocity determinations made during the compliance determination required by § 63.645 of this subpart and § 63.116(a) of subpart G of this part or § 63.670(h) of this subpart, as applicable, and

* * * * *

(vii) For relief valves in organic HAP service, a description of the monitoring system to be implemented, including the relief valves and process parameters to be monitored, and a description of the alarms or other methods by which operators will be notified of a pressure release.

(2) If initial performance tests are required by §§ 63.643 through 63.653 of this subpart, the Notification of Compliance Status report shall include one complete test report for each test method used for a particular source. On and after [THE DATE 3 YEARS AFTER THE DATE OF PUBLICATION OF THE FINAL RULE AMENDMENTS IN THE **FEDERAL REGISTER**], performance tests shall be submitted according to paragraph (h)(9) of this section.

* * * * *

(3) For each monitored parameter for which a range is required to be established under § 63.120(d) of subpart G or § 63.985(b) of subpart SS for storage vessels or § 63.644 for miscellaneous process vents, the Notification of Compliance Status report shall include the information in paragraphs (f)(3)(i) through (f)(3)(iii) of this section.

* * * * *

(6) Notification of Compliance Status reports required by § 63.640(l)(3) and for storage vessels subject to the compliance dates specified in § 63.640(h)(2) shall be submitted no later than 60 days after the end of the 6-month period during which the change or addition was made that resulted in the Group 1 emission point or the existing Group 1 storage vessel was brought into compliance, and may be combined with the periodic report. Six-month periods shall be the same 6-month periods specified in paragraph (g) of this section. The Notification of Compliance Status report shall include the information specified in paragraphs (f)(1) through (f)(5) of this section. This information may be submitted in an operating permit application, in an amendment to an operating permit application, in a separate submittal, as part of the periodic report, or in any combination of these four. If the required information has been submitted before the date 60 days after the end of the 6-month period in which the addition of the Group 1 emission

point took place, a separate Notification of Compliance Status report is not required within 60 days after the end of the 6-month period. If an owner or operator submits the information specified in paragraphs (f)(1) through (f)(5) of this section at different times, and/or in different submittals, later submittals may refer to earlier submittals instead of duplicating and resubmitting the previously submitted information.

(g) The owner or operator of a source subject to this subpart shall submit Periodic Reports no later than 60 days after the end of each 6-month period when any of the information specified in paragraphs (g)(1) through (7) of this section or paragraphs (g)(9) through (12) of this section is collected. The first 6-month period shall begin on the date the Notification of Compliance Status report is required to be submitted. A Periodic Report is not required if none of the events identified in paragraph (g)(1) through (7) of this section or paragraphs (g)(9) through (12) of this section occurred during the 6-month period unless emissions averaging is utilized. Quarterly reports must be submitted for emission points included in emission averages, as provided in paragraph (g)(8) of this section. An owner or operator may submit reports required by other regulations in place of or as part of the Periodic Report required by this paragraph if the reports contain the information required by paragraphs (g)(1) through (12) of this section.

(1) For storage vessels, Periodic Reports shall include the information specified for Periodic Reports in paragraph (g)(2) through (g)(5) of this section. Information related to gaskets, slotted membranes, and sleeve seals is not required for storage vessels that are part of an existing source complying with § 63.646.

(2) *Internal floating roofs.* (i) An owner or operator who elects to comply with § 63.646 by using a fixed roof and an internal floating roof or by using an external floating roof converted to an internal floating roof shall submit the results of each inspection conducted in accordance with § 63.120(a) of subpart G in which a failure is detected in the control equipment.

(A) For vessels for which annual inspections are required under § 63.120(a)(2)(i) or (a)(3)(ii) of subpart G, the specifications and requirements listed in paragraphs (g)(2)(i)(A)(*1*) through (*3*) of this section apply.

(*1*) A failure is defined as any time in which the internal floating roof is not resting on the surface of the liquid inside the storage vessel and is not resting on the leg supports; or there is liquid on the floating roof; or the seal is detached from the internal floating roof; or there are holes, tears, or other openings in the seal or seal fabric; or there are visible gaps between the seal and the wall of the storage vessel.

(*2*) Except as provided in paragraph (g)(2)(i)(C) of this section, each Periodic Report shall include the date of the inspection, identification of each storage vessel in which a failure was detected, and a description of the failure. The Periodic Report shall also describe the nature of and date the repair was made or the date the storage vessel was emptied.

(*3*) If an extension is utilized in accordance with § 63.120(a)(4) of subpart G, the owner or operator shall, in the next Periodic Report, identify the vessel; include the documentation specified in § 63.120(a)(4) of subpart G; and describe the date the storage vessel was emptied and the nature of and date the repair was made.

(B) For vessels for which inspections are required under § 63.120(a)(2)(ii), (a)(3)(i), or (a)(3)(iii) of subpart G (i.e., internal inspections), the specifications and requirements listed in paragraphs (g)(2)(i)(B)(*1*) and (*2*) of this section apply.

(*1*) A failure is defined as any time in which the internal floating roof has defects; or the primary seal has holes, tears, or other openings in the seal or the seal fabric; or the secondary seal (if one has been installed) has holes, tears, or other openings in the seal or the seal fabric; or, for a storage vessel that is part of a new source, the gaskets no longer close off the liquid surface from the atmosphere; or, for a storage vessel that is part of a new source, the slotted membrane has more than a 10 percent open area.

(*2*) Each Periodic Report shall include the date of the inspection, identification of each storage vessel in which a failure was detected, and a description of the failure. The Periodic Report shall also describe the nature of and date the repair was made.

(ii) An owner or operator who elects to comply with § 63.660 by using a fixed roof and an internal floating roof shall submit the results of each inspection conducted in accordance with § 63.1063(c)(1), (d)(1), and (d)(2) of subpart WW in which a failure is detected in the control equipment. For vessels for which inspections are required under § 63.1063(c) and (d), the specifications and requirements listed in paragraphs (g)(2)(ii)(A) through (g)(2)(ii)(C) of this section apply.

(A) A failure is defined in § 63.1063(d)(1) of subpart WW.

(B) Each Periodic Report shall include a copy of the inspection record required by § 63.1065(b) of subpart WW when a failure occurs.

(C) An owner or operator who elects to use an extension in accordance with § 63.1063(e)(2) of subpart WW shall, in the next Periodic Report, submit the documentation required by § 63.1063(e)(2).

(3) *External floating roofs.* (i) An owner or operator who elects to comply with § 63.646 by using an external floating roof shall meet the periodic reporting requirements specified in paragraphs (g)(3)(i)(A) and (B) of this section.

(A) The owner or operator shall submit, as part of the Periodic Report, documentation of the results of each seal gap measurement made in accordance with § 63.120(b) of subpart G in which the seal and seal gap requirements of § 63.120(b)(3), (b)(4), (b)(5), or (b)(6) of subpart G are not met. This documentation shall include the information specified in paragraphs (g)(3)(i)(A)(*1*) through (*4*) of this section.

(*1*) The date of the seal gap measurement.

(*2*) The raw data obtained in the seal gap measurement and the calculations described in § 63.120(b)(3) and (b)(4) of subpart G.

(*3*) A description of any seal condition specified in § 63.120(b)(5) or (b)(6) of subpart G that is not met.

(*4*) A description of the nature of and date the repair was made, or the date the storage vessel was emptied.

(B) If an extension is utilized in accordance with § 63.120(b)(7)(ii) or (b)(8) of subpart G, the owner or operator shall, in the next Periodic Report, identify the vessel; include the documentation specified in § 63.120(b)(7)(ii) or (b)(8) of subpart G, as applicable; and describe the date the vessel was emptied and the nature of and date the repair was made.

(C) The owner or operator shall submit, as part of the Periodic Report, documentation of any failures that are identified during visual inspections required by § 63.120(b)(10) of subpart G. This documentation shall meet the specifications and requirements in paragraphs (g)(3)(i)(C)(*1*) and (*2*) of this section.

(*1*) A failure is defined as any time in which the external floating roof has defects; or the primary seal has holes or other openings in the seal or the seal fabric; or the secondary seal has holes, tears, or other openings in the seal or the seal fabric; or, for a storage vessel that is part of a new source, the gaskets no longer close off the liquid surface from the atmosphere; or, for a storage

vessel that is part of a new source, the slotted membrane has more than 10 percent open area.

(*2*) Each Periodic Report shall include the date of the inspection, identification of each storage vessel in which a failure was detected, and a description of the failure. The Periodic Report shall also describe the nature of and date the repair was made.

(ii) An owner or operator who elects to comply with § 63.660 by using an external floating roof shall meet the periodic reporting requirements specified in paragraphs (g)(3)(ii)(A) and (B) of this section.

(A) For vessels for which inspections are required under § 63.1063(c)(2), (d)(1), and (d)(3) of subpart WW, the owner or operator shall submit, as part of the Periodic Report, a copy of the inspection record required by § 63.1065(b) of subpart WW when a failure occurs. A failure is defined in § 63.1063(d)(1).

(B) An owner or operator who elects to use an extension in accordance with § 63.1063(e)(2) or § 63.1063(c)(2)(iv)(B) of subpart WW shall, in the next Periodic Report, submit the documentation required by those paragraphs.

(4) An owner or operator who elects to comply with § 63.646 or § 63.660 by using an external floating roof converted to an internal floating roof shall comply with the periodic reporting requirements of paragraph (g)(2)(i) of this section.

(5) An owner or operator who elects to comply with § 63.646 or § 63.660 by installing a closed vent system and control device shall submit, as part of the next Periodic Report, the information specified in paragraphs (g)(5)(i) through (g)(5)(iii) of this section, as applicable.

(i) The Periodic Report shall include the information specified in paragraphs (g)(5)(i)(A) and (B) of this section for those planned routine maintenance operations that would require the control device not to meet the requirements of either § 63.119(e)(1) or (e)(2) of subpart G, § 63.985(a) and (b) of subpart SS, or § 63.670, as applicable.

(A) A description of the planned routine maintenance that is anticipated to be performed for the control device during the next 6 months. This description shall include the type of maintenance necessary, planned frequency of maintenance, and lengths of maintenance periods.

(B) A description of the planned routine maintenance that was performed for the control device during the previous 6 months. This description shall include the type of maintenance performed and the total number of hours during those 6 months that the control device did not meet the requirements of either § 63.119(e)(1) or (2) of subpart G, § 63.985(a) and (b) of subpart SS, or § 63.670, as applicable, due to planned routine maintenance.

(ii) If a control device other than a flare is used, the Periodic Report shall describe each occurrence when the monitored parameters were outside of the parameter ranges documented in the Notification of Compliance Status report. The description shall include: Identification of the control device for which the measured parameters were outside of the established ranges, and causes for the measured parameters to be outside of the established ranges.

(iii) If a flare is used prior to [THE DATE 3 YEARS AFTER THE DATE OF PUBLICATION OF THE FINAL RULE AMENDMENTS IN THE **FEDERAL REGISTER**] and prior to electing to comply with the requirements in § 63.670, the Periodic Report shall describe each occurrence when the flare does not meet the general control device requirements specified in § 63.11(b) of subpart A of this part and shall include: Identification of the flare that does not meet the general requirements specified in § 63.11(b) of subpart A of this part, and reasons the flare did not meet the general requirements specified in § 63.11(b) of subpart A of this part.

(iv) If a flare is used on and after compliance with the requirements in § 63.670 is elected, which can be no later than [THE DATE 3 YEARS AFTER THE DATE OF PUBLICATION OF THE FINAL RULE AMENDMENTS IN THE **FEDERAL REGISTER**], the Periodic Report shall include the items specified in paragraph (g)(11) of this section.

(v) An owner or operator who elects to comply with § 63.660 by installing an alternate control device as described in § 63.1064 of subpart WW shall submit, as part of the next Periodic Report, a written application as described in § 63.1066(b)(3) of subpart WW.

(6) * * *

(iii) For closed vent systems, include the records of periods when vent stream flow was detected in the bypass line or diverted from the control device, a flow indicator was not operating or a bypass of the system was indicated, as specified in paragraph (i)(4) of this section.

(7) * * *

(i) Results of the performance test shall include the identification of the source tested, the date of the test, the percentage of emissions reduction or outlet pollutant concentration reduction (whichever is needed to determine compliance) for each run and for the average of all runs, and the values of the monitored operating parameters.

* * * * *

(10) For relief valves, Periodic Reports must include the information specified in paragraphs (g)(10)(i) through (iii) of this section.

(i) For relief valves in organic HAP gas or vapor service, pursuant to § 63.648(j), report any instrument reading of 500 ppm or greater, more than 5 days after the relief valve returns to service after a pressure release.

(ii) For relief valves in organic HAP gas or vapor service subject to § 63.648(j)(2), report confirmation that all monitoring to show compliance was conducted within the reporting period.

(iii) For relief valves in organic HAP service, report each pressure release to the atmosphere, including duration of the pressure release and estimate of quantity of substances released.

(11) For flares subject to § 63.670, Periodic Reports must include the information specified in paragraphs (g)(11)(i) through (iii) of this section.

(i) Records as specified in paragraph (i)(9)(i) of this section for each period when regulated material is routed to a flare and a pilot flame is not present.

(ii) Visible emission records as specified in paragraph (i)(9)(ii) of this section for each period of 2 consecutive hours during which visible emissions exceeded a total of 5 minutes.

(iii) The 15-minute block periods for which the applicable operating limits specified in § 63.670(d) through (f) are not met. Indicate the date and time for the period, the 15-minute block average operating parameters determined following the methods in § 63.670(k) through (o) as applicable, and an indication of whether the three criteria in § 63.670(e)(vi) were all met for that 15-minute block period.

(iv) Records as specified in paragraph (i)(9)(x) of this section for each period when a halogenated vent stream as defined in § 63.641 is discharged to the flare.

(12) If a source fails to meet an applicable standard, report such events in the Periodic Report. Report the number of failures to meet an applicable standard. For each instance, report the date, time and duration of each failure. For each failure the report must include a list of the affected sources or equipment, an estimate of the quantity of each regulated pollutant emitted over any emission limit, and a description of the method used to estimate the emissions.

(13) Any changes in the information provided in a previous Notification of Compliance Status report.

(h) * * *

(2) For storage vessels, notifications of inspections as specified in paragraphs (h)(2)(i) and (h)(2)(ii) of this section.

(i) * * *

(B) Except as provided in paragraph (h)(2)(i)(C) of this section, if the internal inspection required by § 63.120(a)(2), § 63.120(a)(3), or § 63.120(b)(10) of subpart G or § 63.1063(d)(1) of subpart WW is not planned and the owner or operator could not have known about the inspection 30 calendar days in advance of refilling the vessel with organic HAP, the owner or operator shall notify the Administrator at least 7 calendar days prior to refilling of the storage vessel. Notification may be made by telephone and immediately followed by written documentation demonstrating why the inspection was unplanned. This notification, including the written documentation, may also be made in writing and sent so that it is received by the Administrator at least 7 calendar days prior to the refilling.

* * * * *

(ii) In order to afford the Administrator the opportunity to have an observer present, the owner or operator of a storage vessel equipped with an external floating roof shall notify the Administrator of any seal gap measurements. The notification shall be made in writing at least 30 calendar days in advance of any gap measurements required by § 63.120(b)(1) or (b)(2) of subpart G or § 63.1062(d)(3) of subpart WW. The State or local permitting authority can waive this notification requirement for all or some storage vessels subject to the rule or can allow less than 30 calendar days' notice.

* * * * *

(8) For fenceline monitoring systems subject to § 63.658, within 45 calendar days after the end of each semiannual reporting period, each owner or operator shall submit the following information to the EPA's Compliance and Emissions Data Reporting Interface (CEDRI) that is accessed through the EPA's Central Data Exchange (CDX) (*www.epa.gov/cdx*). The owner or operator need not transmit this data prior to obtaining 12 months of data.

(i) Individual sample results for each monitor for each sampling episode during the semiannual reporting period. For the first reporting period and for any period in which a passive monitor is added or moved, the owner or operator shall report the coordinates of all of the passive monitor locations. The owner or operator shall determine the coordinates using an instrument with an accuracy of at least 3 meters. Coordinates shall be in decimal degrees with at least five decimal places.

(ii) The biweekly 12-month rolling average concentration difference (Δc) values for benzene for the semiannual reporting period.

(iii) Notation for each biweekly value that indicates whether background correction was used, all measurements in the sampling period were below detection, or whether an outlier was removed from the sampling period data set.

(9) On and after [THE DATE OF PUBLICATION OF THE FINAL RULE AMENDMENTS IN THE **FEDERAL REGISTER**], if required to submit the results of a performance test or CEMS performance evaluation, the owner or operator shall submit the results using EPA's Electronic Reporting Tool (ERT) according to the procedures in paragraphs (h)(9)(i) and (ii) of this section.

(i) Within 60 days after the date of completing each performance test as required by this subpart, the owner or operator shall submit the results of the performance tests according to the method specified by either paragraph (h)(9)(i)(A) or (h)(9)(i)(B) of this section.

(A) For data collected using test methods supported by the EPA's ERT as listed on the EPA's ERT Web site (*http://www.epa.gov/ttn/chief/ert/index.html*), the owner or operator must submit the results of the performance test to the CEDRI accessed through the EPA's CDX (*http://cdx.epa.gov/epa_home.asp*), unless the Administrator approves another approach. Performance test data must be submitted in a file format generated through the use of the EPA's ERT. If an owner or operator claims that some of the performance test information being submitted is confidential business information (CBI), the owner or operator must submit a complete file generated through the use of the EPA's ERT, including information claimed to be CBI, on a compact disc or other commonly used electronic storage media (including, but not limited to, flash drives) by registered letter to the EPA. The electronic media must be clearly marked as CBI and mailed to U.S. EPA/OAQPS/CORE CBI Office, Attention: WebFIRE Administrator, MD C404–02, 4930 Old Page Rd., Durham, NC 27703. The same ERT file with the CBI omitted must be submitted to the EPA via CDX as described earlier in this paragraph.

(B) For data collected using test methods that are not supported by the EPA's ERT as listed on the EPA's ERT Web site, the owner or operator must submit the results of the performance test to the Administrator at the appropriate address listed in § 63.13.

(ii) Within 60 days after the date of completing each CEMS performance evaluation as required by this subpart, the owner or operator must submit the results of the performance evaluation according to the method specified by either paragraph (h)(9)(ii)(A) or (h)(9)(ii)(B) of this section.

(A) For data collection of relative accuracy test audit (RATA) pollutants that are supported by the EPA's ERT as listed on the ERT Web site, the owner or operator must submit the results of the performance evaluation to the CEDRI that is accessed through the EPA's CDX, unless the Administrator approves another approach. Performance evaluation data must be submitted in a file format generated through the use of the EPA's ERT. If an owner or operator claims that some of the performance evaluation information being submitted is CBI, the owner or operator must submit a complete file generated through the use of the EPA's ERT, including information claimed to be CBI, on a compact disc or other commonly used electronic storage media (including, but not limited to, flash drives) by registered letter to the EPA. The electronic media must be clearly marked as CBI and mailed to U.S. EPA/OAQPS/CORE CBI Office, Attention: WebFIRE Administrator, MD C404–02, 4930 Old Page Rd., Durham, NC 27703. The same ERT file with the CBI omitted must be submitted to the EPA via CDX as described earlier in this paragraph.

(B) For any performance evaluation data with RATA pollutants that are not supported by the EPA's ERT as listed on the EPA's ERT Web site, the owner or operator must submit the results of the performance evaluation to the Administrator at the appropriate address listed in § 63.13.

(i) *Recordkeeping.* Each owner or operator of a source subject to this subpart shall keep copies of all applicable reports and records required by this subpart for at least 5 years except as otherwise specified in paragraphs (i)(1) through (11) of this section. All applicable records shall be maintained in such a manner that they can be readily accessed within 24 hours. Records may be maintained in hard copy or computer-readable form including, but not limited to, on paper, microfilm, computer, flash drive, floppy disk, magnetic tape, or microfiche.

(1) Each owner or operator subject to the storage vessel provisions in § 63.646 shall keep the records specified in § 63.123 of subpart G of this part except as specified in paragraphs (i)(1)(i)

through (iv) of this section. Each owner or operator subject to the storage vessel provisions in § 63.660 shall keep records as specified in paragraphs (i)(1)(v) and (vi) of this section.

* * * * *

(ii) All references to § 63.122 in § 63.123 of subpart G of this part shall be replaced with § 63.655(e).

* * * * *

(v) Each owner or operator of a Group 1 storage vessel subject to the provisions in § 63.660 shall keep records as specified in § 63.1065.

(vi) Each owner or operator of a Group 2 storage vessel shall keep the records specified in § 63.1065(a) of subpart WW. If a storage vessel is determined to be Group 2 because the weight percent total organic HAP of the stored liquid is less than or equal to 4 percent for existing sources or 2 percent for new sources, a record of any data, assumptions, and procedures used to make this determination shall be retained.

* * * * *

(4) For each closed vent system that contains bypass lines that could divert a vent stream away from the control device and to the atmosphere, or cause air intrusion into the control device, the owner or operator shall keep a record of the information specified in either paragraph (i)(4)(i) or (ii) of this section, as applicable.

(i) The owner or operator shall maintain records of any alarms triggered because flow was detected in the bypass line, including the date and time the alarm was triggered and the duration of the flow in the bypass line. The owner or operator shall also maintain records of all periods when the vent stream is diverted from the control device or air intrudes into the control device. The owner or operator shall include an estimate of the volume of gas, the concentration of organic HAP in the gas and the resulting emissions of organic HAP that bypassed the control device.

(ii) Where a seal mechanism is used to comply with § 63.644(c)(2), hourly records of flow are not required. In such cases, the owner or operator shall record the date that the monthly visual inspection of the seals or closure mechanisms is completed. The owner or operator shall also record the occurrence of all periods when the seal or closure mechanism is broken, the bypass line valve position has changed or the key for a lock-and-key type lock has been checked out. The owner or operator shall include an estimate of the volume of gas, the concentration of organic HAP in the gas and the resulting emissions of organic HAP that bypassed the control device.

(5) The owner or operator of a heat exchange system subject to this subpart shall comply with the recordkeeping requirements in paragraphs (i)(5)(i) through (v) of this section and retain these records for 5 years.

* * * * *

(7) Each owner or operator subject to the delayed coking unit decoking operations provisions in § 63.657 must maintain records of the average pressure for the 5-minute period prior to venting to the atmosphere, draining, or deheading the coke drum for each cooling cycle for each coke drum.

(8) For fenceline monitoring systems subject to § 63.658, each owner or operator shall keep the records specified in paragraphs (i)(8)(i) through (ix) of this section on an ongoing basis.

(i) Coordinates of all passive monitors, including replicate samplers and field blanks, and the meteorological station. The owner or operator shall determine the coordinates using an instrument with an accuracy of at least 3 meters. The coordinates shall be in decimal degrees with at least five decimal places.

(ii) The start and stop times and dates for each sample, as well as the tube identifying information.

(iii) Daily unit vector wind direction, calculated daily sigma theta, daily average temperature and daily average barometric pressure measurements.

(iv) For each outlier determined in accordance with Section 9.2 of Method 325A of Appendix A of this part, the sampler location of and the concentration of the outlier and the evidence used to conclude that the result is an outlier.

(v) For samples that will be adjusted for a background, the location of and the concentration measured simultaneously by the background sampler, and the perimeter samplers to which it applies.

(vi) Individual sample results, the calculated Δc for benzene for each sampling episode and the two samples used to determine it, whether background correction was used, and the 12-month rolling average Δc calculated after each sampling episode.

(vii) Method detection limit for each sample, including co-located samples and blanks.

(viii) Documentation of corrective action taken each time the action level was exceeded.

(ix) Other records as required by Methods 325A and 325B of Appendix A of this part.

(9) For each flare subject to § 63.670, each owner or operator shall keep the records specified in paragraphs (i)(9)(i) through (vii) of this section up-to-date and readily accessible, as applicable.

(i) Retain records of the output of the monitoring device used to detect the presence of a pilot flame as required in § 63.670(b) for a minimum of 2 years. Retain records of periods during which the pilot flame is not present when regulated material is routed to a flare for a minimum of 5 years.

(ii) Daily visible emissions observations, as required in § 63.670(c), as well as any observations required in § 63.670(h). The record must identify whether the visible emissions observation was performed, the results of each observation, total duration of observed visible emissions, and whether it was a 5-minute or 2-hour observation. If the owner or operator performs visible emissions observations more than one time during a day, the record must also identify the date and time of day each visible emissions observation was performed.

(iii) The 15-minute block average cumulative flows for flare vent gas and, if applicable, total steam, perimeter assist air, and premix assist air specified to be monitored under § 63.670(i), along with the date and time interval for the 15-minute block. If multiple monitoring locations are used to determine cumulative vent gas flow, total steam, perimeter assist air, and premix assist air, retain records of the 15-minute block average flows for each monitoring location for a minimum of 2 years, and retain the 15-minute block average cumulative flows that are used in subsequent calculations for a minimum of 5 years. If pressure and temperature monitoring is used, retain records of the 15-minute block average temperature, pressure and molecular weight of the flare vent gas or assist gas stream for each measurement location used to determine the 15-minute block average cumulative flows for a minimum of 2 years, and retain the 15-minute block average cumulative flows that are used in subsequent calculations for a minimum of 5 years.

(iv) The flare vent gas compositions specified to be monitored under § 63.670(j). Retain records of individual component concentrations from each compositional analyses for a minimum of 2 years. If NHV_{vg} or total hydrocarbon analyzer is used, retain records of the 15-minute block average values for a minimum of 5 years.

(v) Each 15-minute block average operating parameter calculated following the methods specified in § 63.670(k) through (m), as applicable.

(vi) The 15-minute block average olefins, hydrogen, and olefins plus

hydrogen concentration in the combustion zone used to determine if the criteria in § 63.670(e)(4) are met. If process knowledge and engineering calculations are used, retain records of the information used in the assessment and records of all compositional analyses required in § 63.670(o)(ii). Identify all 15-minute block averages for which all three criteria in § 63.670(e)(4) are met or are assumed to be met.

(vii) All periods during which operating values are outside of the applicable operating limits specified in § 63.670(d) through (f) when regulated material is being routed to the flare.

(viii) All periods during which the owner or operator does not perform flare monitoring according to the procedures in § 63.670(g) through (j).

(ix) Records of periods when there is flow of vent gas to the flare, but when there is no flow of regulated material to the flare, including the start and stop time and dates of periods of no regulated material flow.

(x) All periods during which a halogenated vent stream, as defined in § 63.641, is discharged to the flare. Records shall include the start time and date of the event, the end time and date of the event, and an estimate of the cumulative flow of the halogenated vent stream over the duration of the event.

(10) If the owner or operator elects to comply with § 63.661, the owner or operator shall keep the records described in paragraphs (i)(10)(i) through (v) of this section.

(i) The equipment and process units for which the owner or operator chooses to use the optical gas imaging instrument.

(ii) All records required by part 60, Appendix K of this chapter, as applicable.

(iii) A video record to document the leak survey results. The video record must include a time and date stamp for each monitoring event.

(iv) Identification of the equipment screened and the time and date of the screening.

(v) Documentation of repairs attempted and repairs delayed. If repair of a leak is confirmed using the optical gas imaging instrument, then instead of the maximum instrument reading measured by Method 21 of part 60, Appendix A–7 of this chapter, the owner or operator shall keep a video record following repair to confirm the equipment is repaired.

(11) Other records must be kept as specified in paragraphs (i)(11)(i) through (iii) of this section.

(i) In the event that an affected unit fails to meet an applicable standard, record the number of failures. For each failure, record the date, time and duration of each failure.

(ii) For each failure to meet an applicable standard, record and retain a list of the affected sources or equipment, an estimate of the volume of each regulated pollutant emitted over any emission limit and a description of the method used to estimate the emissions.

(iii) Record actions taken to minimize emissions in accordance with § 63.642(n), and any corrective actions taken to return the affected unit to its normal or usual manner of operation.

■ 27. Section 63.656 is amended by:

■ a. Revising paragraph (c) introductory text;

■ b. Revising paragraph (c)(1); and

■ c. Adding paragraph (c)(5).

The revisions and additions read as follows:

§ 63.656 Implementation and enforcement.

* * * * *

(c) The authorities that cannot be delegated to state, local, or Tribal agencies are as specified in paragraphs (c)(1) through (5) of this section.

(1) Approval of alternatives to the requirements in §§ 63.640, 63.642(g) through (l), 63.643, 63.646 through 63.652, 63.654, 63.657 through 63.661, and 63.670. Where these standards reference another subpart, the cited provisions will be delegated according to the delegation provisions of the referenced subpart. Where these standards reference another subpart and modify the requirements, the requirements shall be modified as described in this subpart. Delegation of the modified requirements will also occur according to the delegation provisions of the referenced subpart.

* * * * *

(5) Approval of the corrective action plan under § 63.658(h).

■ 28. Section 63.657 is added to read as follows:

§ 63.657 Delayed coking unit decoking operation standards.

(a) Each owner or operator of a delayed coking unit shall depressure each coke drum to a closed blowdown system until the coke drum vessel pressure is 2 pounds per square inch gauge (psig) or less prior to venting to the atmosphere, draining or deheading the coke drum at the end of the cooling cycle.

(b) Each owner or operator of a delayed coking unit shall install, operate, calibrate, and maintain a continuous parameter monitoring system to determine the coke drum vessel pressure. The pressure monitoring system must be capable of measuring a pressure of 2 psig within ±0.5 psig.

(c) The owner or operator of a delayed coking unit shall determine the coke drum vessel pressure on a 5-minute rolling average basis while the coke drum is vented to the closed blowdown system to demonstrate compliance the requirement in paragraph (a) of this section. Pressure readings after initiating steps to isolate the coke drum from the closed blowdown system just prior to atmospheric venting, draining, or deheading the coke drum shall not be used in determining the average coke drum vessel pressure for the purpose of compliance with the requirement in paragraph (a) of this section.

■ 29. Section 63.658 is added to read as follows:

§ 63.658 Fenceline monitoring provisions.

(a) The owner or operator shall conduct sampling along the facility property boundary and analyze the samples in accordance with Methods 325A and 325B of Appendix A of this part.

(b) The target analyte is benzene.

(c) The owner or operator shall determine passive monitor locations in accordance with Section 8.2 of Method 325A of Appendix A of this part. General guidance for siting passive monitors can be found in EPA–454/R–98–004, Quality Assurance Handbook for Air Pollution Measurement Systems, Volume II: Part 1: Ambient Air Quality Monitoring Program Quality System Development, August 1998 (incorporated by reference—see § 63.14). Alternatively, the owner or operator may elect to place monitors at 2 kilometers intervals as measured along the property boundary, provided additional monitors are located, if necessary, as required in Section 8.2.2.5 in Method 325A of Appendix A of this part.

(1) As it pertains to this subpart, known emission source, as used in Section 8.2.2.5 in Method 325A of Appendix A of this part for siting passive monitors means a wastewater treatment unit or a Group 1 storage vessel.

(2) The owner or operator may collect one or more background samples if the owner or operator believes that an offsite upwind source or an onsite source excluded under § 63.640(g) may influence the sampler measurements. If the owner or operator elects to collect one or more background samples, the owner of operator must develop and submit a site-specific monitoring plan for approval according to the requirements in paragraph (i) of this section. Upon approval of the site-specific monitoring plant, the background sampler(s) should be

operated co-currently with the routine samplers.

(3) The owner or operator shall collect at least one co-located duplicate sample for every 10 field samples per sampling episode and at least two field blanks per sampling episode, as described in Section 9.3 in Method 325A of Appendix A of this part. The co-located duplicates may be collected at any one of the perimeter sampling locations.

(4) The owner or operator shall follow the procedure in Section 9.6 of Method 325B of Appendix A of this part to determine the detection limit of benzene for each sampler used to collect samples, background samples (if the owner or operator elects to do so), co-located samples and blanks.

(d) The owner or operator shall use a dedicated meteorological station in accordance with Section 8.3 of Method 325A of Appendix A of this part.

(1) The owner or operator shall collect and record hourly average meteorological data, including wind speed, wind direction and temperature.

(2) The owner or operator shall follow the calibration and standardization procedures for meteorological measurements in EPA–454/B–08–002, Quality Assurance Handbook for Air Pollution Measurement Systems, Volume IV: Meteorological Measurements, Version 2.0 (Final), March 2008 (incorporated by reference—see § 63.14).

(e) The length of the sampling episode must be fourteen days, unless a shorter sampling episode is determined to be necessary under paragraph (g) or (i) of this section. A sampling episode is defined as the period during which the owner or operator collects the sample and does not include the time required to analyze the sample.

(f) Within 30 days of completion of each sampling episode, the owner or operator shall determine whether the results are above or below the action level as follows:

(1) For each sampling episode, the owner or operator shall determine the highest and lowest sample results for benzene from the sample pool and calculate the difference in concentration (Δc).

(i) The owner or operator shall adhere to the following procedures when one or more samples for the sampling episode are below the method detection limit for benzene:

(A) If the lowest detected value of benzene is below detection, the owner or operator shall use zero as the lowest sample result when calculating Δc.

(B) If all sample results are below the method detection limit, the owner or operator shall use the method detection limit as the highest sample result.

(ii) If the owner or operator identifies an offsite upwind source or an onsite source excluded under § 63.640(g) that contributes to the benzene concentration at any passive monitor and collects background samples according to an approved site-specific monitoring plan, the owner or operator shall determine Δc using the calculation protocols outlined in the approved site-specific monitoring plan and in paragraph (i) of this section.

(2) The owner or operator shall average the Δc values collected over the twelve months prior to and including the most recent sampling episode. The owner or operator shall update this value after receiving the results of each sampling episode.

(3) The action level for benzene is 9 micrograms per cubic meter ($\mu g/m^3$). If the 12-month rolling average Δc value for benzene is less than 9 $\mu g/m^3$, the concentration is below the action level. If the 12-month rolling average Δc value for benzene is equal to or greater than 9 $\mu g/m^3$, the concentration is above the action level, and the owner or operator shall conduct a root cause analysis and corrective action in accordance with paragraph (g) of this section.

(g) Within 5 days of determining that the action level has been exceeded for any 12-month rolling average and no longer than 35 days after completion of the sampling episode, the owner or operator shall initiate a root cause analysis to determine the cause of such exceedance and to determine appropriate corrective action, as described in paragraphs (g)(1) through (4) of this section. The root cause analysis and corrective action analysis shall be completed no later than 45 days after determining there is an exceedance. Root cause analysis and corrective action may include, but is not limited to:

(1) Leak inspection using Method 21 of part 60, Appendix A–7 of this chapter and repairing any leaks found.

(2) Leak inspection using optical gas imaging as specified in § 63.661 and repairing any leaks found.

(3) Visual inspection to determine the cause of the high benzene emissions and implementing repairs to reduce the level of emissions.

(4) Employing progressively more frequent sampling, analysis and meteorology (e.g., using shorter sampling episodes for Methods 325A and 325B of Appendix A of this part, or using active sampling techniques), or employing additional monitors to determine contributing offsite sources.

(h) If, upon completion of the corrective actions described in paragraph (g) of this section, the action level is exceeded for the next sampling episode following the completion of the corrective action, the owner or operator shall develop a corrective action plan that describes the corrective action(s) completed to date, additional measures that the owner or operator proposes to employ to reduce fenceline concentrations below the action level, and a schedule for completion of these measures. The owner or operator shall submit the corrective action plan to the Administrator within 60 days after determining the action level was exceeded during the sampling episode following the completion of the initial corrective action. The Administrator shall approve or disapprove the plan in 90 days. The plan shall be considered approved if the Administrator either approves the plan in writing, or fails to disapprove the plan in writing. The 90-day period shall begin when the Administrator receives the plan.

(i) An owner or operator may request approval from the Administrator for a site-specific monitoring plan to account for offsite upwind sources or onsite sources excluded under § 63.640(g) according to the requirements in paragraphs (i)(1) through (4) of this section.

(1) The owner or operator shall prepare and submit a site-specific monitoring plan and receive approval of the site-specific monitoring plan prior to using the near-field source alternative calculation for determining Δc provided in paragraph (i)(2) of this section. The site-specific monitoring plan shall include, at a minimum, the elements specified in paragraphs (i)(1)(i) through (v) of this section.

(i) Identification of the near-field source or sources. For onsite sources, documentation that the onsite source is excluded under § 63.640(g) and identification of the specific provision in § 63.640(g) that applies to the source.

(ii) Location of the additional monitoring stations that shall be used to determine the uniform background concentration and the near-field source concentration contribution.

(iii) Identification of the fenceline monitoring locations impacted by the near-field source. If more than one near-field source is present, identify for each monitoring location, the near field source or sources that are expected to contribute to fenceline concentration at that monitoring location.

(iv) A description of (including sample calculations illustrating) the planned data reduction and calculations to determine the near-field source

concentration contribution for each monitoring location.

(v) If more frequent monitoring is proposed or if a monitoring station other than a passive diffusive tub monitoring station is proposed, provide a detailed description of the measurement methods, measurement frequency, and recording frequency proposed for determining the uniform background or near-field source concentration contribution.

(2) When an approved site-specific monitoring plan is used, the owner or operator shall determine Δc for comparison with the 9 μg/m³ action level using the requirements specified in paragraphs (2)(i) through (iii) of this section.

(i) For each monitoring location, calculate Δc_i using the following equation.

$$\Delta c_i = MCF_i - NFS_i - UB$$

Where:

Δc_i = The fenceline concentration, corrected for background, at measurement location i, micrograms per cubic meter (μg/m³).

MFC_i = The measured fenceline concentration at measurement location i, μg/m³.

NFS_i = The near-field source contributing concentration at measurement location i determined using the additional measurements and calculation procedures included in the site-specific monitoring plan, μg/m³. For monitoring locations that are not included in the site-specific monitoring plan as impacted by a near-field source, use NFS_i = 0 μg/m³.

UB = The uniform background concentration determined using the additional measurements specified included in the site-specific monitoring plan, μg/m³. If no additional measurement location is specified in the site-specific monitoring plan for determining the uniform background concentration, use UB = 0 μg/m³.

(ii) When one or more samples for the sampling episode are below the method detection limit for benzene, adhere to the following procedures:

(A) If the benzene concentration at the monitoring location used for the uniform background concentration is below detection, the owner or operator shall use zero for UB for that monitoring period.

(B) If the benzene concentration at the monitoring location(s) used to determine the near-field source contributing concentration is below detection, the owner or operator shall use zero for the monitoring location concentration when calculating NFS_i for that monitoring period.

(C) If a fenceline monitoring location sample result is below the method detection limit, the owner or operator shall use the method detection limit as the sample result.

(iii) Determine Δc for the monitoring period as the maximum value of Δc_i from all of the fenceline monitoring locations for that monitoring period.

(3) The site-specific monitoring plan shall be submitted and approved as described in paragraphs (i)(3)(i) through (iv) of this section.

(i) The site-specific monitoring plan must be submitted to the Administrator for approval.

(ii) The site-specific monitoring plan shall also be submitted to the following address: U.S. Environmental Protection Agency, Office of Air Quality Planning and Standards, Sector Policies and Programs Division, U.S. EPA Mailroom (E143–01), Attention: Refinery Sector Lead, 109 T.W. Alexander Drive, Research Triangle Park, NC 27711. Electronic copies in lieu of hard copies may also be submitted to *refineryrtr@epa.gov.*

(iii) The Administrator shall approve or disapprove the plan in 90 days. The plan shall be considered approved if the Administrator either approves the plan in writing, or fails to disapprove the plan in writing. The 90-day period shall begin when the Administrator receives the plan.

(iv) If the Administrator finds any deficiencies in the site-specific monitoring plan and disapproves the plan in writing, the owner or operator may revise and resubmit the site-specific monitoring plan following the requirements in paragraphs (i)(3)(i) and (ii) of this section. The 90-day period starts over with the resubmission of the revised monitoring plan.

(4) The approval by the Administrator of a site-specific monitoring plan will be based on the completeness, accuracy and reasonableness of the request process for a site-specific monitoring plan. Factors that the EPA will consider in reviewing the request for a site-specific monitoring plan include, but are not limited to, those described in paragraphs (i)(4)(i) through (v) of this section.

(i) The identification of the near-field source or sources. For onsite sources, the documentation provided that the onsite source is excluded under § 63.640(g).

(ii) The monitoring location selected to determine the uniform background concentration or an indication that no uniform background concentration monitor will be used.

(iii) The location(s) selected for additional monitoring to determine the near-field source concentration contribution.

(iv) The identification of the fenceline monitoring locations impacted by the near-field source or sources.

(v) The appropriateness of the planned data reduction and calculations to determine the near-field source concentration contribution for each monitoring location.

(vi) If more frequent monitoring is proposed or if a monitoring station other than a passive diffusive tub monitoring station is proposed, the adequacy of the description of the measurement methods, measurement frequency, and recording frequency proposed and the adequacy of the rationale for using the alternative monitoring frequency or method.

(j) The owner or operator shall comply with the applicable recordkeeping and reporting requirements in § 63.655(h) and (i).

■ 30. Section 63.660 is added to read as follows:

§ 63.660 Storage vessel provisions.

On and after the applicable compliance date for a Group 1 storage vessel located at a new or existing source as specified in § 63.640(h), the owner or operator of a Group 1 storage vessel that is part of a new or existing source shall comply with the requirements in subpart WW or subpart SS of this part according to the requirements in paragraphs (a) through (i) of this section.

(a) As used in this section, all terms not defined in § 63.641 shall have the meaning given them in subpart A, subpart WW, or subpart SS of this part. The definitions of ''Group 1 storage vessel'' (item 2) and ''storage vessel'' in § 63.641 shall apply in lieu of the definition of ''storage vessel'' in § 63.1061.

(1) An owner or operator may use good engineering judgment or test results to determine the stored liquid weight percent total organic HAP for purposes of group determination. Data, assumptions, and procedures used in the determination shall be documented.

(2) When an owner or operator and the Administrator do not agree on whether the annual average weight percent organic HAP in the stored liquid is above or below 4 percent for a storage vessel at an existing source or above or below 2 percent for a storage vessel at a new source, an appropriate method (based on the type of liquid stored) as published by EPA or a consensus-based standards organization shall be used. Consensus-based standards organizations include, but are not limited to, the following: ASTM International (100 Barr Harbor Drive, P.O. Box CB700, West Conshohocken,

Pennsylvania 19428–B2959, (800) 262–1373, *http://www.astm.org*), the American National Standards Institute (ANSI, 1819 L Street NW., 6th Floor, Washington, DC 20036, (202) 293–8020, *http://www.ansi.org*), the American Gas Association (AGA, 400 North Capitol Street NW., 4th Floor, Washington, DC 20001, (202) 824–7000, *http://www.aga.org*), the American Society of Mechanical Engineers (ASME, Three Park Avenue, New York, NY 10016–5990, (800) 843–2763, *http://www.asme.org*), the American Petroleum Institute (API, 1220 L Street NW., Washington, DC 20005–4070, (202) 682–8000, *http://www.api.org*), and the North American Energy Standards Board (NAESB, 801 Travis Street, Suite 1675, Houston, TX 77002, (713) 356–0060, *http://www.naesb.org*).

(b) In addition to the options presented in §§ 63.1063(a)(2)(vii)(A), 63.1063(a)(2)(vii)(B), and 63.1064, an external floating roof storage vessel may comply with § 63.1063(a)(2)(vii) using a flexible enclosure system as described in item 6 of Appendix I: Acceptable Controls for Slotted Guidepoles Under the Storage Tank Emissions Reduction Partnership Program (available at *http://www.epa.gov/ttn/atw/petrefine/petrefpg.html).*

(c) For the purposes of this subpart, references shall apply as specified in paragraphs (c)(1) through (6) of this section.

(1) All references to ''the proposal date for a referencing subpart'' and ''the proposal date of the referencing subpart'' in subpart WW of this part mean June 30, 2014.

(2) All references to ''promulgation of the referencing subpart'' and ''the promulgation date of the referencing subpart'' in subpart WW of this part mean [THE DATE OF PUBLICATION OF THE FINAL RULE AMENDMENTS IN THE **FEDERAL REGISTER**].

(3) All references to ''promulgation date of standards for an affected source or affected facility under a referencing subpart'' in subpart SS of this part mean [THE DATE OF PUBLICATION OF THE FINAL RULE AMENDMENTS IN THE **FEDERAL REGISTER**].

(4) All references to ''the proposal date of the relevant standard established pursuant to CAA section 112(f)'' in subpart SS of this part mean June 30, 2014.

(5) All references to ''the proposal date of a relevant standard established pursuant to CAA section 112(d)'' in subpart SS of this part mean July 14, 1994.

(6) All references to the ''required control efficiency'' in subpart SS of this part mean reduction of organic HAP emissions by 95 percent or to an outlet concentration of 20 ppmv.

(d) For an existing storage vessel fixed roof that meets the definition of Group 1 storage vessel (item 2) in § 63.641 but not the definition of Group 1 storage vessel (item 1) in § 63.641, the requirements of § 63.1062 do not apply until the next time the storage vessel is completely emptied and degassed, or [THE DATE 10 YEARS AFTER PUBLICATION OF THE FINAL RULE AMENDMENTS IN THE **FEDERAL REGISTER**], whichever occurs first.

(e) Failure to perform inspections and monitoring required by this section shall constitute a violation of the applicable standard of this subpart.

(f) References in § 63.1066(a) to initial startup notification requirements do not apply.

(g) References to the Notification of Compliance Status in § 63.999(b) mean the Notification of Compliance Status required by § 63.655(f).

(h) References to the Periodic Reports in §§ 63.1066(b) and 63.999(c) mean the Periodic Report required by § 63.655(g).

(i) Owners or operators electing to comply with the requirements in subpart SS of this part for a Group 1 storage vessel must comply with the requirements in paragraphs (c)(1) through (3) of this section.

(1) If a flare is used as a control device, the flare shall meet the requirements of § 63.670 instead of the flare requirements in § 63.987.

(2) If a closed vent system contains a bypass line, the owner or operator shall comply with the provisions of either § 63.985(a)(3)(i) or (ii) for each closed vent system that contains bypass lines that could divert a vent stream to the atmosphere. Use of the bypass at any time to divert a Group 1 storage vessel to the atmosphere is an emissions standards violation. Equipment such as low leg drains and equipment subject to § 63.648 are not subject to this paragraph.

(3) If storage vessel emissions are routed to a fuel gas system or process, the fuel gas system or process shall be operating at all times when regulated emissions are routed to it. The exception in paragraph § 63.984(a)(1) does not apply.

■ 31. Section 63.661 is added to read as follows:

§ 63.661 Alternative means of emission limitation: Monitoring equipment leaks using optical gas imaging.

(a) *Applicability.* The owner or operator may only use an optical gas imaging instrument to screen for leaking equipment, as required by § 63.648, if the requirements in paragraphs (a)(1) through (3) of this section are met.

(1) The owner or operator may only use the optical gas imaging instrument as an alternative to provisions in § 63.648 that would otherwise require monitoring according to § 60.485(b) or § 63.180(b)(1) through (5), as applicable. The owner or operator shall continue to comply with all other requirements in § 63.648 (*e.g.,* weekly inspections of pumps; for relief valves, installation of a device that is capable of identifying and recording the time and duration of each pressure release, if applicable; sampling connection system requirements).

(2) The owner or operator must be in compliance with the fenceline monitoring provisions of § 63.658.

(3) The optical gas imaging instrument must be able to meet all of the criteria and requirements specified in part 60, Appendix K of this chapter, and the owner or operator shall conduct monitoring according to part 60, Appendix K of this chapter.

(b) *Compliance requirements.* The owner or operator shall meet the requirements of paragraphs (b)(1) through (3) of this section.

(1) The owner or operator shall identify the equipment and process units for which the optical gas imaging instrument will be used to identify leaks.

(2) The owner or operator shall repair leaking equipment as required in the applicable section of part 60, subpart VV of this chapter or subpart H of this part.

(3) Monitoring to confirm repair of leaking equipment must be conducted using the procedures referenced in paragraph (a)(2) of this section.

(c) *Recordkeeping.* The owner or operator shall comply with the applicable requirements in § 63.655(i).

■ 32. Section 63.670 is added to read as follows:

§ 63.670 Requirements for flare control devices.

On or before [THE DATE 3 YEARS AFTER THE DATE OF PUBLICATION OF THE FINAL RULE AMENDMENTS IN THE **FEDERAL REGISTER**], the owner or operator of a flare used as a control device for an emission point subject to this subpart shall meet the applicable requirements for flares as specified in paragraphs (a) through (q) of this section and the applicable requirements in § 63.671. The owner or operator may elect to comply with the requirements of paragraph (r) of this section in lieu of the requirements in paragraphs (d) through (f) of this section, as applicable.

(a) *Halogenated vent streams.* The owner or operator shall not use a flare

to control halogenated vent streams as defined in § 63.641.

(b) *Pilot flame presence.* The owner or operator shall operate each flare with a pilot flame present at all times when regulated material is routed to the flare. The pilot system must be equipped with an automated device to relight the pilot if extinguished. The owner or operator shall monitor for the presence of a pilot flame as specified in paragraph (g) of this section.

(c) *Visible emissions.* Each flare must be designed for and operated with no visible emissions, except for periods not to exceed a total of 5 minutes during any 2 consecutive hours. The owner or operator shall monitor for visible emissions from the flare as specified in paragraph (b) of this section.

(d) *Flare tip velocity.* For each flare, the owner or operator shall comply with either paragraph (d)(1) or (d)(2) of this section, provided the appropriate monitoring systems are in-place. If a total hydrocarbon analyzer is used for compositional analysis as allowed under section (j)(4) of this section, then the owner or operator must comply with paragraph (d)(1) of this section.

(1) Except as provided in paragraph (d)(2) of this section, the actual flare tip velocity (V_{tip}) must be less than 60 feet per second when regulated material is being routed to the flare. The owner or operator shall monitor V_{tip} using the procedures specified in paragraph (i) and (k) of this section.

(2) V_{tip} must be less than 400 feet per second and also less than the maximum allowed flare tip velocity (V_{max}) as calculated according to the following equation at all times regulated material is being routed to the flare. The owner or operator shall monitor V_{tip} using the procedures specified in paragraph (i) and (k) of this section and monitor gas composition and determine NHV_{vg} using the procedures specified in paragraphs (j) and (l) of this section.

$$Log_{10}(V_{max}) = \frac{NHV_{vg} + 1{,}212}{850}$$

Where:

V_{max} = Maximum allowed flare tip velocity, ft/sec.

NHV_{vg} = Net heating value of flare vent gas, as determined by paragraph (l)(4) of this section, Btu/scf.

1,212 = Constant.

850 = Constant.

(e) *Target combustion zone gas properties.* For each flare, the owner or operator shall comply with the applicable requirements in either paragraph (e)(1), (2), or (3) of this section. The owner or operator may elect to comply with any of these applicable requirements at any time (e.g., may elect to comply with the requirements in paragraph (e)(1) during certain flow conditions and comply with the requirements in paragraph (e)(2) or (e)(3) under different flow conditions) provided that the owner or operator has the appropriate monitoring equipment to determine compliance with the specified requirement.

(1) The net heating value of flare combustion zone gas (NHV_{cz}) must be greater than or equal to the target values in paragraphs (e)(1)(i) or (ii), as applicable, when regulated material is being routed to the flare. The owner or operator shall monitor and calculate NHV_{cz} as specified in paragraph (m) of this section.

(i) For flares meeting all three requirements in paragraph (e)(4) of this section, the target NHV_{cz} value is 380 British thermal units per standard cubic feet (Btu/scf).

(ii) For all flares other than those meeting all three requirements in paragraph (e)(4) of this section, the target NHV_{cz} value is 270 Btu/scf.

(2) The lower flammability limit of the combustion zone gas (LFL_{cz}) must be less than or equal to the target values in paragraphs (e)(2)(i) or (ii), as applicable, when regulated material is being routed to the flare. The owner or operator shall monitor and calculate LFL_{cz} as specified in paragraph (m) of this section.

(i) For flares meeting all three requirements in paragraph (e)(4) of this section, the target LFL_{cz} value is 0.11 volume fraction.

(ii) For all flares other than those meeting all three requirements in paragraph (e)(4) of this section, the target LFL_{cz} value is 0.15 volume fraction.

(3) The total volumetric fraction of hydrogen and combustible organic components present in the combustion zone gas (C_{cz}), as propane, must be greater than or equal to the target values in paragraphs (e)(3)(i) or (ii), as applicable, when regulated material is being routed to the flare. The owner or operator shall monitor and calculate C_{cz} as specified in paragraph (m) of this section.

(i) For flares meeting all three requirements in paragraph (e)(4) of this section, the target C_{cz} value is 0.23 volume fraction as propane.

(ii) For all flares other than those meeting all three requirements in paragraph (e)(4) of this section, the target C_{cz} value is 0.18 volume fraction as propane.

(4) More stringent combustion zone gas target properties apply only during those flare flow periods when all three conditions in paragraphs (e)(4)(i) through (iii) simultaneously exist. The owner or operator shall monitor and calculate hydrogen and cumulative olefin combustion zone concentrations as specified in paragraph (o) of this section:

(i) The concentration of hydrogen in the combustion zone is greater than 1.2 percent by volume.

(ii) The cumulative concentration of olefins in the combustion zone is greater than 2.5 percent by volume.

(iii) The cumulative concentration of olefins in the combustion zone plus the concentration of hydrogen in the combustion zone is greater than 7.4 percent by volume.

(f) *Target dilution parameters for flares with perimeter assist air.* For each flare actively receiving perimeter assist air, the owner or operator shall comply with the applicable requirements in either paragraph (f)(1), (2), or (3) of this section in addition to complying with the target combustion zone gas properties as specified in paragraph (e) of this section. The owner or operator may elect to comply with any of these applicable requirements at any time (e.g., may elect to comply with the requirements in paragraph (f)(1) during certain flow conditions and comply with the requirements in paragraph (f)(2) or (f)(3) under different flow conditions) provided that the owner or operator has the appropriate monitoring equipment to determine compliance with the specified requirement.

(1) The net heating value dilution parameter (NHV_{dil}) must be greater than or equal to the target values in paragraphs (f)(1)(i) or (ii), as applicable, when regulated material is being routed to the flare. The owner or operator shall monitor and calculate NHV_{dil} as specified in paragraph (n) of this section.

(i) For flares meeting all three requirements in paragraph (e)(4) of this section, the target NHV_{dil} value is 31

British thermal units per square foot (Btu/ft^2).

(ii) For all flares other than those meeting all three requirements in paragraph (e)(4) of this section, the target NHV_{dil} value is 22 Btu/ft^2.

(2) The lower flammability limit dilution parameter (LFL_{dil}) must be less than or equal to the target values in paragraphs (f)(2)(i) or (ii), as applicable, when regulated material is being routed to the flare. The owner or operator shall monitor and calculate LFL_{dil} as specified in paragraph (n) of this section.

(i) For flares meeting all three requirements in paragraph (e)(4) of this section, the target LFL_{dil} value is 1.6 volume fraction per foot (volume fraction/ft).

(ii) For all flares other than those meeting all three requirements in paragraph (e)(4) of this section, the target LFL_{dil} value is 2.2 volume fraction/ft.

(3) The combustibles concentration dilution parameter (C_{dil}) must be greater than or equal to the target values in paragraphs (f)(3)(i) or (ii), as applicable, when regulated material is being routed to the flare. The owner or operator shall monitor and calculate C_{dil} as specified in paragraph (n) of this section.

(i) For flares meeting all three requirements in paragraph (e)(4) of this section, the target C_{dil} value is 0.015 volume fraction-ft.

(ii) For all flares other than those meeting all three requirements in paragraph (e)(4) of this section, the target C_{cz} value is 0.012 volume fraction-ft.

(g) *Pilot flame monitoring.* The owner or operator shall continuously monitor the presence of the pilot flame(s) using a device (including, but not limited to, a thermocouple, ultraviolet beam sensor, or infrared sensor) capable of detecting that the pilot flame(s) is present.

(h) *Visible emissions monitoring.* The owner or operator shall monitor visible emissions while regulated materials are vented to the flare. An initial visible emissions demonstration must be conducted using an observation period of 2 hours using Method 22 at 40 CFR part 60, Appendix A–7. Subsequent visible emissions observations must be conducted at a minimum of once per day using an observation period of 5 minutes using Method 22 at 40 CFR part 60, Appendix A–7. If at any time the owner or operator sees visible emissions, even if the minimum required daily visible emission monitoring has already been performed, the owner or operator shall immediately begin an observation period of 5 minutes using Method 22 at 40 CFR part 60, Appendix A–7. If visible emissions are observed for more than one continuous minute during any 5-minute observation period, the observation period using Method 22 at 40 CFR part 60, Appendix A–7 must be extended to 2 hours.

(i) *Flare vent gas, steam assist and air assist flow rate monitoring.* The owner or operator shall install, operate, calibrate, and maintain a monitoring system capable of continuously measuring, calculating, and recording the volumetric flow rate in the flare header or headers that feed the flare. If assist air or assist steam is used, the owner or operator shall install, operate, calibrate, and maintain a monitoring system capable of continuously measuring, calculating, and recording the volumetric flow rate of assist air and/or assist steam used with the flare. If pre-mix assist air and perimeter assist are both used, the owner or operator shall install, operate, calibrate, and maintain a monitoring system capable of separately measuring, calculating, and recording the volumetric flow rate of premix assist air and perimeter assist air used with the flare.

(1) The flow rate monitoring systems must be able to correct for the temperature and pressure of the system and output parameters in standard conditions (i.e., a temperature of 20 °C [68 °F] and a pressure of 1 atm). The flare vent gas flow rate monitoring system(s) must also be able to output flow in actual conditions for use in the flare tip velocity calculation.

(2) Mass flow monitors may be used for determining volumetric flow rate of flare vent gas provided the molecular weight of the flare vent gas is determined using compositional analysis as specified in paragraph (j) of this section so that the mass flow rate can be converted to volumetric flow at standard conditions using the following equation.

$$Q_{vol} = \frac{Q_{mass} \times 385.3}{MWt}$$

Where:

Q_{vol} = Volumetric flow rate, standard cubic feet per second.

Q_{mass} = Mass flow rate, pounds per second.

385.3 = Conversion factor, standard cubic feet per pound-mole.

MWt = Molecular weight of the gas at the flow monitoring location, pounds per pound-mole.

(3) Mass flow monitors may be used for determining volumetric flow rate of assist air or assist steam. Use equation in paragraph (i)(2) of this section to convert mass flow rates to volumetric flow rates. Use a molecular weight of 18 pounds per pound-mole for assist steam and use a molecular weight of 29 pounds per pound-mole for assist air.

(4) Continuous pressure/temperature monitoring system(s) and appropriate engineering calculations may be used in lieu of a continuous volumetric flow monitoring systems provided the molecular weight of the gas is known. For assist steam, use a molecular weight of 18 pounds per pound-mole. For assist air, use a molecular weight of 29 pounds per pound-mole. For flare vent gas, molecular weight must be determined using compositional analysis as specified in paragraph (j) of this section.

(j) *Flare vent gas composition monitoring.* The owner or operator shall determine the concentration of individual components in the flare vent gas using either the methods provided in paragraphs (j)(1) or (j)(2) of this section, to assess compliance with the operating limits in paragraph (e) of this section and, if applicable, paragraphs (d) and (f) of this section. Alternatively, the owner or operator may elect to directly monitor the net heating value of the flare vent gas following the methods provided in paragraphs (j)(3) of this section or the combustibles concentration following the methods provided in paragraphs (j)(4) of this section.. The owner or operator electing to directly monitor the net heating value of the flare vent gas must comply with the net heating value operating limits in paragraph (e) and, if applicable, paragraph (f) of this section. The owner or operator electing to directly monitor the combustibles concentration in the flare vent gas must comply with the combustibles concentration operating limits in paragraph (e) and, if applicable, paragraph (f) of this section, and must comply with the maximum velocity requirements in paragraph (d)(1) of this section.

(1) Except as provided in paragraph (j)(5) of this section, the owner or operator shall install, operate, calibrate, and maintain a monitoring system capable of continuously measuring (i.e., at least once every 15 minutes), calculating, and recording the individual component concentrations present in the flare vent gas.

(2) Except as provided in paragraph (j)(5) of this section, the owner or operator shall install, operate, and maintain a grab sampling system capable of collecting an evacuated canister sample for subsequent compositional analysis at least once every eight hours while there is flow of regulated material to the flare. Subsequent compositional analysis of the samples must be performed according to Method 18 of 40 CFR part

60, Appendix A–6, ASTM D1945–03 (Reapproved 2010) (incorporated by reference—see § 63.14), or ASTM UOP539–12 (incorporated by reference—see § 63.14).

(3) The owner or operator shall install, operate, calibrate, and maintain a monitoring system capable of continuously measuring, calculating, and recording $NHV_{vg.}$ at standard conditions.

(4) The owner or operator shall install, operate, calibrate, and maintain a monitoring system capable of continuously measuring, calculating, and recording total hydrocarbon content (as propane) as a surrogate for combustibles concentration.

(5) Direct compositional monitoring is not required for pipeline quality natural gas streams. In lieu of monitoring the composition of a pipeline quality natural gas stream, the following composition can be used for any pipeline quality natural gas stream.

(i) 93.2 volume percent (vol %) methane.

(ii) 3.2 vol % ethane.

(iii) 0.6 vol % propane.

(iv) 0.3 vol % butane.

(v) 2.0 vol % hydrogen.

(vi) 0.7 vol % nitrogen.

(k) *Calculation methods for determining compliance with* V_{tip} *operating limits.* The owner or operator shall determine V_{tip} on a 15-minute block average basis according to the following requirements.

(1) The owner or operator shall use design and engineering principles to determine the unobstructed cross sectional area of the flare tip. The unobstructed cross sectional area of the flare tip is the total tip area that vent gas can pass through. This area does not include any stability tabs, stability rings, and upper steam or air tubes because vent gas does not exit through them.

(2) The owner or operator shall determine the cumulative volumetric flow of vent gas for each 15-minute block average period using the data from the continuous flow monitoring system required in paragraph (i) of this section according to the following requirements, as applicable.

(i) Use set 15-minute time periods starting at 12 midnight to 12:15 a.m., 12:15 a.m. to 12:30 a.m. and so on concluding at 11:45 p.m. to midnight when calculating 15-minute block average flow volumes.

(ii) If continuous pressure/temperature monitoring system(s) and engineering calculations are used as allowed under paragraph (i)(4) of this section, the owner of operator shall, at a minimum, determine the 15-minute block average temperature and pressure from the monitoring system and use those values to perform the engineering calculations to determine the cumulative flow over the 15-minute block average period. Alternatively, the owner or operator may divide the 15-minute block average period into equal duration subperiods (e.g., three 5-minute periods) and determine the average temperature and pressure for each subperiod, perform engineering calculations to determine the flow for each subperiod, then add the volumetric flows for the subperiods to determine the cumulative volumetric flow of vent gas for the 15-minute block average period.

(3) The 15-minute block average V_{tip} shall be calculated using the following equation.

$$V_{tip} = \frac{Q_{cum}}{Area \times 900}$$

Where:

V_{tip} = Flare tip velocity, feet per second.

Q_{cum} = Cumulative volumetric flow over 15-minute block average period, actual cubic feet.

Area = Unobstructed area of the flare tip, square feet.

900 = Conversion factor, seconds per 15-minute block average.

(4) If the owner or operator chooses to comply with paragraph (d)(2) of this section, the owner or operator shall also determine the net heating value of the flare vent gas following the requirements in paragraph (j) and (l) of this section and calculate V_{max} using the equation in paragraph (d)(2) of this section in order to compare V_{tip} to V_{max} on a 15-minute block average basis.

(l) *Calculation methods for determining flare vent gas parameters.* The owner or operator shall determine the net heating value, lower flammability limit, and/or combustibles concentration vent gas of the flare (NHV_{vg}, LFL_{vg}, and/or C_{vg}, respectively) based on the composition monitoring data on a 15-minute block average basis according to the following requirements.

(1) Use set 15-minute time periods starting at 12 midnight to 12:15 a.m., 12:15 a.m. to 12:30 a.m. and so on concluding at 11:45 p.m. to midnight when calculating 15-minute block averages.

(2) When a continuous monitoring system is used to determine flare vent gas composition, net heating value, or total hydrocarbon content:

(i) Use the results from the first sample collected during an event, (for periodic flare vent gas flow events) for the first and second 15-minute block associated with that event.

(ii) For all other 15-minute block periods, use the results that are available from the most recent sample prior to the 15-minute block period for that 15-minute block period. For the purpose of this requirement, use the time that the results become available rather than the time the sample was collected. For example, if a sample is collected at 12:25 a.m. and the analysis is completed at 12:38 a.m., the results are available at 12:38 a.m. and these results would be used to determine compliance during the 15-minute block period from 12:45 a.m. to 1:00 a.m.

(3) When grab samples are used to determine flare vent gas composition:

(i) Use the analytical results from the first grab sample collected for an event for all 15-minute periods from the start of the event through the 15-minute block prior to the 15-minute block in which a subsequent grab sample is collected.

(ii) Use the results from subsequent grab sampling events for all 15 minute periods starting with the 15-minute block in which the sample was collected and ending with the 15-minute block prior to the 15-minute block in which the next grab sample is collected. For the purpose of this requirement, use the time the sample was collected rather than the time the analytical results become available.

(4) The owner or operator shall determine NHV_{vg} from compositional analysis data by using the following equation. If the owner or operator uses a monitoring system(s) capable of continuously measuring, calculating, and recording NHV_{vg}, as provided in paragraph (j)(3) of this section, the owner or operator shall use the NHV_{vg} as determined by the continuous NHV_{vg} monitor.

$$NHV_{vg} = \sum_{i=1}^{n} x_i NHV_i$$

Where:

NHV_{vg} = Net heating value of flare vent gas, Btu/scf.

i = Individual component in flare vent gas.

n = Number of components in flare vent gas.

x_i = Concentration of component i in flare vent gas, volume fraction.

NHV_i = Net heating value of component i according to table 12 of this subpart, Btu/scf. If the component is not specified in table 12 of this subpart, the heats of combustion may be determined using any published values where the net enthalpy per mole of offgas is based on combustion at 25 °C and 1 atmosphere (or constant pressure) with offgas water in the gaseous state, but the standard temperature for determining the volume corresponding to one mole of vent gas is 20 °C.

(5) The owner or operator shall calculate LFL_{vg} using the following equation:

$$LFL_{vg} = \frac{1}{\sum_{i=1}^{n}\left(\frac{\chi_i}{LFL_i}\right)}$$

Where:

LFL_{vg} = Lower flammability limit of flare vent gas, volume fraction.

n = Number of components in the vent gas.

i = Individual component in the vent gas.

χ_i = Concentration of component i in the vent gas, volume percent (vol %).

LFL_i = Lower flammability limit of component i according to table 12 of this subpart, vol %. If the component is not specified in table 12 of this subpart, the owner or operator shall use the LFL value as published in Appendix A of Flammability Characteristics of Combustible Gases and Vapors, U.S. Bureau of Mines, Bulletin 627, 1965 (incorporated by reference—see § 63.14). All inerts, including nitrogen, shall be assumed to have an infinite lower flammability limit (e.g., $LFL_{N2} = \infty$, so that $\chi_{N2}/LFL_{N2} = 0$).

(6) The owner or operator shall calculate C_{vg} using the following equation. If the owner or operator uses a total hydrocarbon analyzer, the owner or operator may substitute the "$\Sigma\chi_i$" term in the following equation with the total volumetric hydrocarbon concentration present in the flare vent gas (vol % as propane), and the owner or operator may choose to ignore the concentration of hydrogen in the flare vent gas.

$$C_{vg} = \frac{\left[\sum_{i=1}^{n}\left(\frac{CMN_i \times \chi_i}{3}\right) + \chi_h\right]}{100\%}$$

Where:

C_{vg} = Total volumetric fraction of hydrogen and combustible organic components present in the flare vent gas, volume fraction. For the purposes of C_{vg}, carbon dioxide is not considered to be a combustible organic component, but carbon monoxide may be included in C_{vg}.

n = Number of individual combustible organic components in flare vent gas.

i = Individual combustible organic component in flare vent gas.

χ_i = Concentration of combustible organic component *i* in flare vent gas, vol %.

CMN_i = Carbon mole number of combustible organic component *i* in flare vent gas, mole carbon atoms per mole of compound. E.g., CMN for ethane (C_2H_6) is 2; CMN for propane (C_3H_8) is 3.

χ_h = Concentration of hydrogen in flare vent gas, vol %.

100% = Constant, used to convert volume percent to volume fraction.

(m) *Calculation methods for determining combustion zone parameters.* The owner or operator shall determine the net heating value, lower flammability limit and combustibles concentration of the combustion zone gas (NHV_{cz}, LFL_{cz}, and C_{cz}, respectively) based on the vent gas and assist gas flow rates on a 15-minute block average basis according to the following requirements. For periods when there is no assist steam flow or premix assist air flow, the combustion zone parameters are equal to the vent gas parameters.

(1) The owner or operator shall calculate NHV_{cz} using the following equation:

$$NHV_{cz} = \frac{Q_{vg} \times NHV_{vg}}{\left(Q_{vg} + Q_s + Q_{a,premix}\right)}$$

Where:

NHV_{cz} = Net heating value of combustion zone gas, Btu/scf.

NHV_{vg} = Net heating value of flare vent gas for the 15-minute block period, Btu/scf.

Q_{vg} = Cumulative volumetric flow of flare vent gas during the 15-minute block period, scf.

Q_s = Cumulative volumetric flow of total steam during the 15-minute block period, scf.

$Q_{a,premix}$ = Cumulative volumetric flow of premix assist air during the 15-minute block period, scf.

(2) The owner or operator shall calculate LFL_{cz} using the following equation:

$$LFL_{cz} = \frac{LFL_{vg} \times \left(Q_{vg} + Q_s + Q_{a,premix}\right)}{Q_{vg}}$$

Where:

LFL_{cz} = Lower flammability limit of combustion zone gas, volume fraction.

LFL_{vg} = Lower flammability limit of flare vent gas determined for the 15-minute block period, volume fraction.

Q_{vg} = Cumulative volumetric flow of flare vent gas during the 15-minute block period, scf.

Q_s = Cumulative volumetric flow of total steam during the 15-minute block period, scf.

$Q_{a,premix}$ = Cumulative volumetric flow of premix assist air during the 15-minute block period, scf.

(3) The owner or operator shall calculate C_{cz} using the following equation:

$$C_{cz} = \frac{Q_{vg} \times C_{vg}}{\left(Q_{vg} + Q_s + Q_{a,premix}\right)}$$

Where:

C_{cz} = Combustibles concentration in the combustion zone gas, volume fraction.

C_{vg} = Combustibles concentration of flare vent gas determined for the 15-minute block period, volume fraction.

Q_{vg} = Cumulative volumetric flow of flare vent gas during the 15-minute block period, scf.

Q_s = Cumulative volumetric flow of total steam during the 15-minute block period, scf.

$Q_{a,premix}$ = Cumulative volumetric flow of premix assist air during the 15-minute block period, scf.

(n) *Calculation methods for determining dilution parameters.* The owner or operator shall determine the net heating value, lower flammability limit and combustibles concentration dilution parameters (NHV_{dil}, LFL_{dil}, and C_{dil}, respectively) based on the vent gas and perimeter assist air flow rates on a 15-minute block average basis according to the following requirements only during periods when perimeter assist air is used. For 15-minute block periods when there is no cumulative volumetric flow of perimeter assist air, the dilution parameters do not need to be calculated.

(1) The owner or operator shall calculate NHV_{dil} using the following equation:

$$NHV_{dil} = \frac{Q_{vg} \times Diam \times NHV_{vg}}{\left(Q_{vg} + Q_s + Q_{a,premix} + Q_{a,perimeter}\right)}$$

where:

NHV_{dil} = Net heating value of combustion zone gas, Btu/ft^2

NHV_{vg} = Net heating value of flare vent gas determined for the 15-minute block period, Btu/scf.

Q_{vg} = Cumulative volumetric flow of flare vent gas during the 15-minute block period, scf.

Diam = Effective diameter of the unobstructed area of the flare tip for flare vent gas flow, ft. Use the area as determined in paragraph (k)(1) of this section and determine the diameter as $Diam = 2 \times \sqrt{Area/\pi}$

Q_s = Cumulative volumetric flow of total steam during the 15-minute block period, scf.

$Q_{a,premix}$ = Cumulative volumetric flow of premix assist air during the 15-minute block period, scf.

$Q_{a,perimiter}$ = Cumulative volumetric flow of perimeter assist air during the 15-minute block period, scf

(2) The owner or operator shall calculate LFL_{dil} using the following equation:

$$LFL_{dil} = \frac{LFL_{vg} \times \left(Q_{vg} + Q_s + Q_{a,premix} + Q_{a,perimeter}\right)}{Q_{vg} \times Diam}$$

where:

LFL_{dil} = Lower flammability limit of combustion zone gas, ft^{-1}.

LFL_{vg} = Lower flammability limit of flare vent gas determined for the 15-minute block period, volume fraction.

Q_{vg} = Cumulative volumetric flow of flare vent gas during the 15-minute block period, scf.

Diam = Effective diameter of the unobstructed area of the flare tip for flare vent gas flow, ft. Use the area as determined in paragraph (k)(1) of this section and determine the diameter as $Diam = 2 \times \sqrt{Area/\pi}$

Q_s = Cumulative volumetric flow of total steam during the 15-minute block period, scf.

$Q_{a,premix}$ = Cumulative volumetric flow of premix assist air during the 15-minute block period, scf.

$Q_{a,perimiter}$ = Cumulative volumetric flow of perimeter assist air during the 15-minute block period, scf.

(3) The owner or operator shall calculate C_{dil} using the following equation:

$$C_{dil} = \frac{Q_{vg} \times Diam \times C_{vg}}{\left(Q_{vg} + Q_s + Q_{a,premix} + Q_{a,perimeter}\right)}$$

where:

C_{cz} = Combustibles concentration in the combustion zone gas, volume fraction.

C_{vg} = Combustibles concentration of flare vent gas determined for the 15-minute block period, volume fraction.

Q_{vg} = Cumulative volumetric flow of flare vent gas during the 15-minute block period, scf.

Diam = Effective diameter of the unobstructed area of the flare tip for flare vent gas flow, ft. Use the area as determined in paragraph (k)(1) of this section and determine the diameter as $Diam = 2 \times \sqrt{Area/\pi}$

Q_s = Cumulative volumetric flow of total steam during the 15-minute block period, scf.

$Q_{a,premix}$ = Cumulative volumetric flow of premix assist air during the 15-minute block period, scf.

$Q_{a,perimeter}$ = Cumulative volumetric flow of perimeter assist air during the 15-minute block period, scf.

(o) *Special provisions for assessing olefins and hydrogen combustion zone concentrations.* The owner or operator shall determine the olefins and hydrogen content of the flare vent gas and calculate the combustion zone

concentrations for the purposes of assessing the criteria in paragraph (e)(4) of this section on a 15-minute block average according to the following requirements.

(1) The olefins concentration shall be determined as the cumulative sum of the following flare gas constituents: ethylene, acetylene, propylene, propadiene, all isomers of n- or iso-butene, and all isomers of butadiene.

(2) If individual component concentrations are determined following the methods specified in paragraphs (j)(1) or (j)(2) of this section, the measured vent gas concentrations shall be used to determine the hydrogen, olefins, and hydrogen plus olefins concentration in the combustion zone using the following general equation. The methods specified in paragraphs (l)(1) through (3) of this section, as applicable, shall be used to assign the vent gas concentration results to a specific 15-minute block period.

$$A_{cz} = \frac{Q_{vg} \times A_{vg}}{\left(Q_{vg} + Q_s + Q_{a,premix}\right)}$$

Where:

A_{cz} = Concentration of target compound(s) ''A'' (representing either the olefins concentration, the hydrogen concentration, or the sum of the olefins and hydrogen concentration) in the combustion zone gas, volume fraction.

A_{vg} = Concentration of target compound(s) ''A'' (representing either the olefins concentration, the hydrogen concentration, or the sum of the olefins and hydrogen concentration) in the flare vent gas determined for the 15-minute block period, volume fraction.

Q_{vg} = Cumulative volumetric flow of flare vent gas during the 15-minute block period, scf.

Q_s = Cumulative volumetric flow of total steam during the 15-minute block period, scf.

$Q_{a,\ premix}$ = Cumulative volumetric flow of premix assist air during the 15-minute block period, scf.

(3) If NHV_{vg} or total hydrocarbon monitoring systems are used as provided in paragraphs (j)(3) or (j)(4) of this section, the owner or operator may elect to determine the hydrogen and olefins concentrations using any of the following methods.

(i) The owner or operator may elect to assume the hydrogen concentration, the olefins concentration, and the olefins plus hydrogen concentration in the combustion zone gas exceed all three criteria in (e)(4) at all times without making specific measurements of olefins or hydrogen concentrations.

(ii) The owner or operator may elect to use process knowledge and engineering calculations to determine the highest flare vent gas concentrations of olefins and hydrogen that can reasonably be expected to be discharged to the flare and the highest concentration of olefins plus hydrogen that can reasonably be expected to be discharged to the flare while the flare vent gas concentrations exceed the target combustion zone concentrations in paragraphs (e)(4)(i) and (ii) of this section at the same time. The owner or operator shall take daily flare vent gas samples for fourteen days or for 7 flaring events, whichever results in the greatest number of grab samples to verify that the calculated values are representative of the highest concentrations that reasonably be expected to be discharged to the flare.

(A) If the highest flare vent gas concentrations of olefins, hydrogen, and olefins plus hydrogen that can reasonably be expected to be discharged to the flare do not exceed all three combustion zone concentration criteria in paragraph (e)(4) of this section, for example, if the flare does not service any process units that contain olefins, then the engineering assessment is sufficient to document that all three criteria in paragraph (e)(4) of this section are not met and that the more stringent operating limits do not apply at any time.

(B) If the highest flare vent gas concentrations of olefins, hydrogen, and olefins plus hydrogen that can reasonably be expected to be discharged to the flare exceed all three combustion zone concentration criteria in paragraph (e)(4), then the owner or operator will use the concentrations determined from the engineering analysis as the vent gas concentrations that exist in the vent gas at all times and use the equation in paragraph (o)(2) of this section to determine the combustion zone concentrations of olefins.

(C) If the operation of process units connected to the flares change or new connections are made to the flare and these changes can reasonably be expected to alter the highest vent gas concentrations of olefins, hydrogen, and/or olefins plus hydrogen received by the flare, a new engineering assessment and sampling period for verification will be conducted following the requirements of paragraph (o)(3)(ii) of this section.

(p) *Flare monitoring records.* The owner or operator shall keep the records specified in § 63.655(i)(9).

(q) *Reporting.* The owner or operator shall comply with the reporting requirements specified in § 63.655(g)(11).

(r) *Alternative means of emissions limitation.* An owner or operator may request approval from the Administrator for site-specific operating limits that shall apply specifically to a selected flare. Site-specific operating limits include alternative threshold values for the parameters specified in paragraphs (d) through (f) of this section as well as threshold values for operating parameters other than those specified in paragraphs (d) through (f) of this section. The owner or operator must demonstrate that the flare achieves 96.5 percent combustion efficiency (or 98 percent destruction efficiency) using the site-specific operating limits based on a performance test as described in paragraph (r)(1) of this section. The request shall include information as described in paragraph (r)(2) of this section. The request shall be submitted and followed as described in paragraph (r)(3) of this section.

(1) The owner or operator shall prepare and submit a site-specific test plan and receive approval of the site-specific test plan prior to conducting any flare performance test intended for use in developing site-specific operating limits. The site-specific test plan shall include, at a minimum, the elements specified in paragraphs (r)(1)(i) through (ix) of this section. Upon approval of the site-specific test plan, the owner or operator shall conduct a performance test for the flare following the procedures described in the site-specific test plan.

(i) The design and dimensions of the flare, flare type (air-assisted only, steam-assisted only, air- and steam-assisted, pressure-assisted, or non-assisted), and description of gas being flared, including quantity of gas flared, frequency of flaring events (if periodic), expected net heating value of flare vent gas, minimum total steam assist rate.

(ii) The operating conditions (vent gas compositions, vent gas flow rates and assist flow rates, if applicable) likely to be encountered by the flare during normal operations and the operating conditions for the test period.

(iii) A description of (including sample calculations illustrating) the planned data reduction and calculations to determine the flare combustion or destruction efficiency.

(iv) Site-specific operating parameters to be monitored continuously during the flare performance test. These parameters may include but are not limited to vent gas flow rate, steam and/or air assist flow rates, and flare vent gas composition. If new operating parameters are proposed for use other than those specified in paragraphs (d) through (f) of this section, an explanation of the relevance of the proposed operating parameter(s) as an

indicator of flare combustion performance and why the alternative operating parameter(s) can adequately ensure that the flare achieves the required combustion efficiency.

(v) A detailed description of the measurement methods, monitored pollutant(s), measurement locations, measurement frequency, and recording frequency proposed for both emission measurements and flare operating parameters.

(vi) A description of (including sample calculations illustrating) the planned data reduction and calculations to determine the flare operating parameters.

(vii) The minimum number and length of test runs and range of operating values to be evaluated during the performance test. A sufficient number of test runs shall be conducted to identify the point at which the combustion/destruction efficiency of the flare deteriorates.

(viii) If the flare can receive vent gases containing olefins and hydrogen above the levels specified for the combustion zone gas in paragraph (e)(4) of this section, a sufficient number of tests must be conducted while exceeding these limits to assess whether more stringent operating limits are required under these conditions.

(ix) Test schedule.

(2) The request for flare-specific operating limits shall include sufficient and appropriate data, as determined by the Administrator, to allow the Administrator to confirm that the selected site-specific operating limit(s) adequately ensures that the flare destruction efficiency is 98 percent or greater or that the flare combustion efficiency is 96.5 percent or greater at all times. At a minimum, the request shall contain the information described in paragraphs (r)(2)(i) through (iv) of this section.

(i) The design and dimensions of the flare, flare type (air-assisted only, steam-assisted only, air- and steam-assisted, pressure-assisted, or non-assisted), and description of gas being flared, including quantity of gas flared, frequency of flaring events (if periodic), expected net heating value of flare vent gas, minimum total steam assist rate.

(ii) Results of each performance test run conducted, including, at a minimum:

(A) The measured combustion/destruction efficiency.

(B) The measured or calculated operating parameters for each test run. If operating parameters are calculated, the raw data from which the parameters are calculated must be included in the test report.

(C) Measurement location descriptions for both emission measurements and flare operating parameters.

(D) Description of sampling and analysis procedures (including number and length of test runs) and any modifications to standard procedures. If there were deviations from the approved test plan, a detailed description of the deviations and rationale why the test results or calculation procedures used are appropriate.

(E) Operating conditions (e.g., vent gas composition, assist rates, etc.) that occurred during the test.

(F) Quality assurance procedures.

(G) Records of calibrations.

(H) Raw data sheets for field sampling.

(I) Raw data sheets for field and laboratory analyses.

(J) Documentation of calculations.

(iii) The selected flare-specific operating limit values based on the performance test results, including the averaging time for the operating limit(s), and rationale why the selected values and averaging times are sufficiently stringent to ensure proper flare performance. If new operating parameters or averaging times are proposed for use other than those specified in paragraphs (d) through (f) of this section, an explanation of why the alternative operating parameter(s) or averaging time(s) adequately ensures the flare achieves the required combustion efficiency.

(iv) The means by which the owner or operator will document on-going, continuous compliance with the selected flare-specific operating limit(s), including the specific measurement location and frequencies, calculation procedures, and records to be maintained.

(3) The request shall be submitted as described in paragraphs (r)(3)(i) through (iv) of this section.

(i) The owner or operator may request approval from the Administrator at any time upon completion of a performance test conducted following the methods in an approved site-specific test plan for an operating limit(s) that shall apply specifically to that flare.

(ii) The request must be submitted to the Administrator for approval. The owner or operator must continue to comply with the applicable standards for flares in this subpart until the requirements in 40 CFR 63.6(g)(1) are met and a notice is published in the **Federal Register** allowing use of such an alternative means of emission limitation.

(iii) The request shall also be submitted to the following address: U.S. Environmental Protection Agency, Office of Air Quality Planning and Standards, Sector Policies and Programs Division, U.S. EPA Mailroom (E143–01), Attention: Refinery Sector Lead, 109 T.W. Alexander Drive, Research Triangle Park, NC 27711. Electronic copies in lieu of hard copies may also be submitted to *refineryrtr@epa.gov*.

(iv) If the Administrator finds any deficiencies in the request, the request must be revised to address the deficiencies and be re-submitted for approval within 45 days of receipt of the notice of deficiencies. The owner or operator must comply with the revised request as submitted until it is approved.

(4) The approval process for a request for a flare-specific operating limit(s) is described in paragraphs (r)(4)(i) through (iii) of this section.

(i) Approval by the Administrator of a flare-specific operating limit(s) request will be based on the completeness, accuracy and reasonableness of the request. Factors that the EPA will consider in reviewing the request for approval include, but are not limited to, those described in paragraphs (r)(4)(i)(A) through (C) of this section.

(A) The description of the flare design and operating characteristics.

(B) If a new operating parameter(s) other than those specified in paragraphs (d) through (f) of this section is proposed, the explanation of how the proposed operating parameter(s) serves a good indicator(s) of flare combustion performance.

(C) The results of the flare performance test and the establishment of operating limits that ensures that the flare destruction efficiency is 98 percent or greater or that the flare combustion efficiency is 96.5 percent or greater at all times.

(D) The completeness of the flare performance test report.

(ii) If the request is approved by the Administrator, a flare-specific operating limit(s) will be established at the level(s) demonstrated in the approved request.

(iii) If the Administrator finds any deficiencies in the request, the request must be revised to address the deficiencies and be re-submitted for approval.

33. Section 63.671 is added to read as follows:

§ 63.671 Requirements for flare monitoring systems.

(a) *Operation of CPMS.* For each CPMS installed to comply with applicable provisions in § 63.670, the owner or operator shall install, operate, calibrate, and maintain the CPMS as

specified in paragraphs (a)(1) through (8) of this section.

(1) All monitoring equipment must meet the minimum accuracy, calibration and quality control requirements specified in table 13 of this subpart.

(2) The owner or operator shall ensure the readout (that portion of the CPMS that provides a visual display or record) or other indication of the monitored operating parameter from any CPMS required for compliance is readily accessible onsite for operational control or inspection by the operator of the source.

(3) All CPMS must complete a minimum of one cycle of operation (sampling, analyzing and data recording) for each successive 15-minute period.

(4) Except for maintenance periods, instrument adjustments or checks to maintain precision and accuracy, calibration checks, and zero and span adjustments, the owner or operator shall operate all CPMS and collect data continuously when regulated emissions are routed to the flare.

(5) The owner or operator shall operate, maintain, and calibrate each CPMS according to the CPMS monitoring plan specified in paragraph (b) of this section.

(6) For each CPMS, the owner or operator shall comply with the out-of-control procedures described in paragraphs (c) of this section. The CPMS monitoring plan must be submitted to the Administrator for approval upon request.

(7) The owner or operator shall reduce data from a CPMS as specified in paragraph (d) of this section.

(8) The CPMS must be capable of measuring the appropriate parameter over the range of values expected for that measurement location. The data recording system associated with each CPMS must have a resolution that is equal to or better than the required system accuracy.

(b) *CPMS monitoring plan.* The owner or operator shall develop and implement a CPMS quality control program documented in a CPMS monitoring plan. The owner or operator shall have the CPMS monitoring plan readily available on-site at all times and shall submit a copy of the CPMS monitoring plan to the Administrator upon request by the Administrator. The CPMS monitoring plan must contain the information listed in paragraphs (b)(1) through (5) of this section.

(1) Identification of the specific flare being monitored and the flare type (air-assisted only, steam-assisted only, air- and steam-assisted, pressure-assisted, or non-assisted).

(2) Identification of the parameter to be monitored by the CPMS and the expected parameter range, including worst case and normal operation.

(3) Description of the monitoring equipment, including the information specified in (c)(3)(i) through (viii) of this section.

(i) Manufacturer and model number for all monitoring equipment components.

(ii) Performance specifications, as provided by the manufacturer, and any differences expected for this installation and operation.

(iii) The location of the CPMS sampling probe or other interface and a justification of how the location meets the requirements of paragraph (a)(1) of this section.

(iv) Placement of the CPMS readout, or other indication of parameter values, indicating how the location meets the requirements of paragraph (a)(2) of this section.

(v) Span of the analyzer. The span must encompass all expected concentrations and meet the requirements of paragraph (b)(10) of this section.

(vi) How data outside of the analyzer's span will be handled and the corrective action that will be taken to reduce and eliminate such occurrences in the future.

(vii) Identification of the parameter detected by the parametric signal analyzer and the algorithm used to convert these values into the operating parameter monitored to demonstrate compliance, if the parameter detected is different from the operating parameter monitored.

(4) Description of the data collection and reduction systems, including the information specified in paragraphs (b)(4)(i) through (iii) of this section.

(i) A copy of the data acquisition system algorithm used to reduce the measured data into the reportable form of the standard and to calculate the applicable averages.

(ii) Identification of whether the algorithm excludes data collected during CPMS breakdowns, out-of-control periods, repairs, maintenance periods, instrument adjustments or checks to maintain precision and accuracy, calibration checks, and zero (low-level), mid-level (if applicable) and high-level adjustments.

(iii) If the data acquisition algorithm does not exclude data collected during CPMS breakdowns, out-of-control periods, repairs, maintenance periods, instrument adjustments or checks to maintain precision and accuracy, calibration checks, and zero (low-level), mid-level (if applicable) and high-level adjustments, a description of the procedure for excluding this data when the averages calculated as specified in paragraph (e) of this section are determined.

(5) Routine quality control and assurance procedures, including descriptions of the procedures listed in paragraphs (c)(5)(i) through (vi) of this section and a schedule for conducting these procedures. The routine procedures must provide an assessment of CPMS performance.

(i) Initial and subsequent calibration of the CPMS and acceptance criteria.

(ii) Determination and adjustment of the calibration drift of the CPMS.

(iii) Daily checks for indications that the system is responding. If the CPMS system includes an internal system check, the owner or operator may use the results to verify the system is responding, as long as the owner or operator checks the internal system results daily for proper operation and the results are recorded.

(iv) Preventive maintenance of the CPMS, including spare parts inventory.

(v) Data recording, calculations and reporting.

(vi) Program of corrective action for a CPMS that is not operating properly.

(c) *Out-of-control periods.* For each CPMS, the owner or operator shall comply with the out-of-control procedures described in paragraphs (c)(1) and (2) of this section.

(1) A CPMS is out-of-control if the zero (low-level), mid-level (if applicable) or high-level calibration drift exceeds two times the accuracy requirement of table 13 of this subpart.

(2) When the CPMS is out of control, the owner or operator shall take the necessary corrective action and repeat all necessary tests that indicate the system is out of control. The owner or operator shall take corrective action and conduct retesting until the performance requirements are below the applicable limits. The beginning of the out-of-control period is the hour a performance check (*e.g.,* calibration drift) that indicates an exceedance of the performance requirements established in this section is conducted. The end of the out-of-control period is the hour following the completion of corrective action and successful demonstration that the system is within the allowable limits. The owner or operator shall not use data recorded during periods the CPMS is out of control in data averages and calculations, used to report emissions or operating levels, as specified in paragraph (d)(3) of this section.

(d) *CPMS data reduction.* The owner or operator shall reduce data from a

CPMS as specified in paragraphs (d)(1) through (3) of this section.

(1) The owner or operator may round the data to the same number of significant digits used in that operating limit.

(2) Periods of non-operation of the process unit (or portion thereof) resulting in cessation of the emissions to which the monitoring applies must not be included in the 15-minute block averages.

(3) Periods when the CPMS is out of control must not be included in the 15-minute block averages.

(e) *Additional requirements for gas chromatographs.* For monitors used to determine compositional analysis for net heating value per § 63.670(j)(1), the gas chromatograph must also meet the requirements of paragraphs (e)(1) through (3) of this section.

(1) The quality assurance requirements are in table 13 of this subpart.

(2) The calibration gases must meet one of the following options:

(i) The owner or operator must use a calibration gas or multiple gases that include all of the compounds that exist in the flare gas stream. All of the calibration gases may be combined in one cylinder. If multiple calibration gases are necessary to cover all compounds, the owner or operator must calibrate the instrument on all of the gases.

(ii) The owner or operator must use a surrogate calibration gas consisting of C1 through C7 normal hydrocarbons. All of the calibration gases may be combined in one cylinder. If multiple calibration gases are necessary to cover all compounds, the owner or operator must calibrate the instrument on all of the gases.

(3) If the owner or operator chooses to use a surrogate calibration gas under paragraph (e)(2)(ii) of this section, the owner or operator must comply with the following paragraphs.

(i) Use the response factor for the nearest normal hydrocarbon (i.e., n-alkane) in the calibration mixture to quantify unknown components detected in the analysis.

(ii) Unknown compounds that elute after n-heptane must either be identified and quantified using an identical compound standard, or the owner or operator must extend the calibration range to include the additional normal hydrocarbons necessary to perform the unknown hydrocarbon quantitation procedure.

■ 34. Table 6 to Subpart CC is amended by:

■ a. Revising the entry ''63.5(d)(1)(ii)'';

■ b. Revising the entry ''63.5(f)'';

■ c. Removing the entry ''63.6(e)'';

■ d. Adding, in numerical order, the entries ''63.6(e)(1)(i) and (ii)'' and ''63.6(e)(1)(iii)'';

■ e. Revising the entries ''63.6(e)(3)(i)'' and ''63.6(e)(3)(iii)–63.6(e)(3)(ix)'';

■ f. Revising the entry ''63.6(f)(1)'';

■ g. Removing the entry ''63.6(f)(2) and (3)'';

■ h. Adding, in numerical order, the entries ''63.6(f)(2)'' and ''63.6(f)(3)'';

■ i. Removing the entry ''63.6(h)(1) and 63.6(h)(2)'';

■ j. Adding, in numerical order, the entries ''63.6(h)(1)'' and ''63.6(h)(2)'';

■ k. Revising the entry ''63.7(b)'';

■ l. Revising the entry ''63.7(e)(1)'';

■ m. Removing the entry ''63.8(a)'';

■ n. Adding, in numerical order, the entries ''63.8(a)(1) and (2),'' ''63.8(a)(3)'' and ''63.8(a)(4)'';

■ o. Revising the entry ''63.8(c)(1)'';

■ p. Adding, in numerical order, the entries ''63.8(c)(1)(i)'' and ''63.8(c)(1)(iii)'';

■ q. Revising the entries ''63.8(c)(4)'' and ''63.8(c)(5)–63.8(c)(8)'';

■ r. Revising the entries ''63.8(d)'' and ''63.8(e)'';

■ s. Revising the entry ''63.8(g)'';

■ t. Revising the entries ''63.10(b)(2)(i)'' and ''63.10(b)(2)(ii)'';

■ u. Revising the entries ''63.10(b)(2)(iv)'' and ''63.10(b)(2)(v)'';

■ v. Revising the entry ''63.10(b)(2)(vii)'';

■ w. Removing the entry ''63.10(c)(9)–63.10(c)(15)'';

■ x. Adding, in numerical order, the entries ''63.10(c)(9),'' ''63.10(c)(10)–63.10(c)(11)'', and ''63.10(c)(12)–63.10(c)(15)'';

■ y. Removing the entries ''63.10(d)(5)(i)'' and ''63.10(d)(5)(ii)'';

■ z. Adding, in numerical order, the entry ''63.10(d)(5)'';

■ aa. Removing the entry ''63.11–63.16'';

■ bb. Adding, in numerical order, the entries ''63.11'' and ''63.12–63.16'';

■ cc. Removing footnote b.

The revisions and additions read as follows:

TABLE 6—GENERAL PROVISIONS APPLICABILITY TO SUBPART CC [a]

Reference	Applies to subpart CC	Comment
* *		* * * * *
63.5(d)(1)(ii)	Yes	Except that for affected sources subject to subpart CC, emission estimates specified in § 63.5(d)(1)(ii)(H) are not required, and § 63.5(d)(1)(ii)(G) and (I) are Reserved and do not apply.
* *		* * * * *
63.5(f)	Yes	Except that the cross-reference in § 63.5(f)(2) to § 63.9(b)(2) does not apply.
* *		* * * * *
63.6(e)(1)(i) and (ii)	No	See § 63.642(n) for general duty requirement.
63.6(e)(1)(iii)	Yes.	
* *		* * * * *
63.6(e)(3)(i)	No.	
* *		* * * * *
63.6(e)(3)(iii)–63.6(e)(3)(ix)	No.	
63.6(f)(1)	No.	
63.6(f)(2)	Yes	Except the phrase ''as specified in § 63.7(c)'' in § 63.6(f)(2)(iii)(D) does not apply because subpart CC does not require a site-specific test plan.
63.6(f)(3)	Yes	Except the cross-references to § 63.6(f)(1) and § 63.6(e)(1)(i) are changed to § 63.642(n).
* *		* * * * *
63.6(h)(1)	No.	

TABLE 6—GENERAL PROVISIONS APPLICABILITY TO SUBPART CC [a]—Continued

Reference	Applies to subpart CC	Comment
63.6(h)(2)	Yes	Except § 63.6(h)(2)(ii), which is reserved.
* *		* * * * *
63.7(b)	Yes	Except subpart CC requires notification of performance test at least 30 days (rather than 60 days) prior to the performance test.
* *		* * * * *
63.7(e)(1)	No	See § 63.642(d)(3).
* *		* * * * *
63.8(a)(1) and (2)	Yes.	
63.8(a)(3)	No	Reserved.
63.8(a)(4)	Yes	Except that for a flare complying with § 63.670, the cross-reference to § 63.11 in this paragraph does not include § 63.11(b).
* *		* * * * *
63.8(c)(1)	Yes	Except § 63.8(c)(1)(i) and § 63.8(c)(iii).
63.8(c)(1)(i)	No	See § 63.642(n).
63.8(c)(1)(iii)	No.	
* *		* * * * *
63.8(c)(4)	Yes	Except that for sources other than flares, subpart CC specifies the monitoring cycle frequency specified in § 63.8(c)(4)(ii) is ''once every hour'' rather than ''for each successive 15-minute period.''
63.8(c)(5)–63.8(c)(8)	No	Subpart CC specifies continuous monitoring system requirements.
63.8(d)	No	Subpart CC specifies quality control procedures for continuous monitoring systems.
63.8(e)	Yes.	
* *		* * * * *
63.8(g)	No	Subpart CC specifies data reduction procedures in §§ 63.655(i)(3) and 63.671(d).
* *		* * * * *
63.10(b)(2)(i)	No.	
63.10(b)(2)(ii)	No	See § 63.655(i)(11) for recordkeeping of (1) date, time and duration; (2) listing of affected source or equipment, and an estimate of the volume of each regulated pollutant emitted over the standard; and (3) actions to minimize emissions and correct the failure.
* *		* * * * *
63.10(b)(2)(iv)	No.	
63.10(b)(2)(v)	No.	
* *		* * * * *
63.10(b)(2)(vii)	No	§ 63.655(i) of subpart CC specifies records to be kept for parameters measured with continuous monitors.
* *		* * * * *
63.10(c)(9)	No	Reserved.
63.10(c)(10)–63.10(c)(11)	No	See § 63.655(i)(11) for malfunctions recordkeeping requirements.
63.10(c)(12)–63.10(c)(15)	No.	
* *		* * * * *
63.10(d)(5)	No	See § 63.655(g)(12) for malfunctions reporting requirements.
* *		* * * * *
63.11	Yes	Except that flares complying with § 63.670 are not subject to the requirements of § 63.11(b).
63.12–63.16	Yes.	

[a] Wherever subpart A specifies ''postmark'' dates, submittals may be sent by methods other than the U.S. Mail (e.g., by fax or courier). Submittals shall be sent by the specified dates, but a postmark is not required.

■ 35. Table 10 to Subpart CC is amended by:

■ a. Redesignating the entry ''Flare'' as ''Flare (if meeting the requirements of 63.643 and 63.644)'';

■ b. Adding the entry ''Flare (if meeting the requirements of 63.670 and 63.671)'' after the newly redesignated entry ''Flare (if meeting the requirements of 63.643 and 63.644)'';

■ c. Revising the entry ''All control devices''; and

■ d. Revising footnote i.

The revisions and additions read as follows:

TABLE 10—MISCELLANEOUS PROCESS VENTS—MONITORING, RECORDKEEPING AND REPORTING REQUIREMENTS FOR COMPLYING WITH 98 WEIGHT-PERCENT REDUCTION OF TOTAL ORGANIC HAP EMISSIONS OR A LIMIT OF 20 PARTS PER MILLION BY VOLUME

Control device	Parameters to be monitored [a]	Recordkeeping and reporting requirements for monitored parameters
* *	* *	* * *
Flare (if meeting the requirements of 63.670 and 63.671).	The parameters specified in 63.670	1. Records as specified in 63.655(i)(9).
		2. Report information as specified in 63.655(g)(11)—PR [g].
All control devices	Volume of the gas stream diverted to the atmosphere from the control device (63.644(c)(1)) *or*	1. Continuous records [c].
		2. Record and report the times and durations of all periods when the vent stream is diverted through a bypass line or the monitor is not operating—PR [g].
	Monthly inspections of sealed valves (63.644(c)(2)).	1. Records that monthly inspections were performed.
		2. Record and report all monthly inspections that show the valves are not closed or the seal has been changed—PR [g].

[a] Regulatory citations are listed in parentheses.
[c] "Continuous records" is defined in § 63.641.
[g] PR = Periodic Reports described in § 63.655(g).
[i] Process vents that are routed to refinery fuel gas systems are not regulated under this subpart provided that on and after [THE DATE 3 YEARS AFTER THE DATE OF PUBLICATION OF THE FINAL RULE AMENDMENTS IN THE **FEDERAL REGISTER**], any flares receiving gas from that fuel gas system are in compliance with § 63.670. No monitoring, recordkeeping, or reporting is required for boilers and process heaters that combust refinery fuel gas.

■ 36. Table 11 is added to Subpart CC to read as follows:

TABLE 11—COMPLIANCE DATES AND REQUIREMENTS

If the construction/reconstruction date [a] is . . .	Then the owner or operator must comply with . . .	And the owner or operator must achieve compliance . . .	Except as provided in . . .
(1) After June 30, 2014	(i) Requirements for new sources in §§ 63.640 through 63.642, § 63.647, §§ 63.650 through 63.653, and §§ 63.656 through 63.660.	(a) Upon initial startup or [THE DATE OF PUBLICATION OF THE FINAL RULE AMENDMENTS IN THE **FEDERAL REGISTER**], whichever is later.	(*1*) § 63.640(k), (l) and (m).
	(ii) The new source requirements in § 63.654 for heat exchange systems.	(a) Upon initial startup or October 28, 2009, whichever is later.	(*1*) § 63.640(k), (l) and (m).
(2) After September 4, 2007 but on or before June 30, 2014.	(i) Requirements for new sources in §§ 63.640 through 63.653 and 63.656 [b c].	(a) Upon initial startup	(*1*) § 63.640(k), (l) and (m).
	(ii) Requirements for new sources in §§ 63.640 through 63.645, §§ 63.647 through 63.653, and §§ 63.656, through 63.658 [b].	(a) On or before [THE DATE 3 YEARS AFTER THE DATE OF PUBLICATION OF THE FINAL RULE AMENDMENTS IN THE **FEDERAL REGISTER**].	(*1*) § 63.640(k), (l) and (m).
	(iii) Requirements for new sources in § 63.660 [c].	(a) On or before [THE DATE 90 DAYS AFTER THE DATE OF PUBLICATION OF THE FINAL RULE AMENDMENTS IN THE **FEDERAL REGISTER**].	(*1*) § 63.640(k), (l) and (m).
	(iv) The new source requirements in § 63.654 for heat exchange systems.	(a) Upon initial startup or October 28, 2009, whichever is later.	(*1*) § 63.640(k), (l) and (m).
(3) After July 14, 1994 but on or before September 4, 2007.	(i) Requirements for new sources in §§ 63.640 through 63.653 and 63.656 [d e].	(a) Upon initial startup or August 18, 1995, whichever is later.	(*1*) § 63.640(k), (l) and (m).
	(ii) Requirements for new sources in §§ 63.640 through 63.645, §§ 63.647 through 63.653, and §§ 63.656, through 63.658 [d].	(a) On or before [THE DATE 3 YEARS AFTER THE DATE OF PUBLICATION OF THE FINAL RULE AMENDMENTS IN THE **FEDERAL REGISTER**].	(*1*) § 63.640(k), (l) and (m).
	(iii) Requirements for new sources in § 63.660 [e].	(a) On or before [THE DATE 90 DAYS AFTER THE DATE OF PUBLICATION OF THE FINAL RULE AMENDMENTS IN THE **FEDERAL REGISTER**].	(*1*) § 63.640(k), (l) and (m).

TABLE 11—COMPLIANCE DATES AND REQUIREMENTS—Continued

If the construction/reconstruction date [a] is . . .	Then the owner or operator must comply with . . .	And the owner or operator must achieve compliance . . .	Except as provided in . . .
	(iv) The existing source requirements in § 63.654 for heat exchange systems.	(a) On or before October 29, 2012	(*1*) § 63.640(k), (l) and (m).
(4) On or before July 14, 1994.	(i) Requirements for existing sources in §§ 63.640 through 63.653 and 63.656 [f g].	(a) On or before August 18, 1998	(*1*) § 63.640(k), (l) and (m) (*2*) § 63.6(c)(5) of subpart A of this part or unless an extension has been granted by the Administrator as provided in § 63.6(i) of subpart A of this part.
	(ii) Requirements for existing sources in §§ 63.640 through 63.645, §§ 63.647 through 63.653, and §§ 63.656 through 63.658 [f].	(a) On or before [THE DATE 3 YEARS AFTER THE DATE OF PUBLICATION OF THE FINAL RULE AMENDMENTS IN THE **FEDERAL REGISTER**].	(*1*) § 63.640(k), (l) and (m).
	(iii) Requirements for existing sources in § 63.660 [g].	(a) On or before [THE DATE 90 DAYS AFTER THE DATE OF PUBLICATION OF THE FINAL RULE AMENDMENTS IN THE **FEDERAL REGISTER**].	(*1*) § 63.640(k), (l) and (m).
	(iii) The existing source requirements in § 63.654 for heat exchange systems.	(a) On or before October 29, 2012	(*1*) § 63.640(k), (l) and (m).

[a] For purposes of this table, the construction/reconstruction date means the date of construction or reconstruction of an entire affected source or the date of a process unit addition or change meeting the criteria in § 63.640(i) or (j). If a process unit addition or change does not meet the criteria in § 63.640(i) or (j), the process unit shall comply with the applicable requirements for existing sources.

[b] Between the compliance dates in items (2)(i)(a) and (2)(ii)(a) of this table, the owner or operator may elect to comply with either the requirements in item (2)(i) or item (2)(ii) of this table. The requirements in item (2)(i) of this table no longer apply after demonstrated compliance with the requirements in item (2)(ii) of this table.

[c] Between the compliance dates in items (2)(i)(a) and (2)(iii)(a) of this table, the owner or operator may elect to comply with either the requirements in item (2)(i) or item (2)(iii) of this table. The requirements in item (2)(i) of this table no longer apply after demonstrated compliance with the requirements in item (2)(iii) of this table.

[d] Between the compliance dates in items (3)(i)(a) and (3)(ii)(a) of this table, the owner or operator may elect to comply with either the requirements in item (3)(i) or item (3)(ii) of this table. The requirements in item (3)(i) of this table no longer apply after demonstrated compliance with the requirements in item (3)(ii) of this table.

[e] Between the compliance dates in items (3)(i)(a) and (3)(iii)(a) of this table, the owner or operator may elect to comply with either the requirements in item (3)(i) or item (3)(iii) of this table. The requirements in item (3)(i) of this table no longer apply after demonstrated compliance with the requirements in item (3)(iii) of this table.

[f] Between the compliance dates in items (4)(i)(a) and (4)(ii)(a) of this table, the owner or operator may elect to comply with either the requirements in item (4)(i) or item (4)(ii) of this table. The requirements in item (4)(i) of this table no longer apply after demonstrated compliance with the requirements in item (4)(ii) of this table.

[g] Between the compliance dates in items (4)(i)(a) and (4)(iii)(a) of this table, the owner or operator may elect to comply with either the requirements in item (4)(i) or item (4)(iii) of this table. The requirements in item (4)(i) of this table no longer apply after demonstrated compliance with the requirements in item (4)(iii) of this table.

■ 37. Table 12 is added to Subpart CC to read as follows:

TABLE 12—INDIVIDUAL COMPONENT PROPERTIES

Component	Molecular formula	MW_i (pounds per pound-mole)	CMN_i (mole per mole)	NHV_i (British thermal units per standard cubic foot)	LFL_i (volume %)
Acetylene	C_2H_2	26.04	2	1,404	2.5
Benzene	C_6H_6	78.11	6	3,591	1.3
1,2-Butadiene	C_4H_6	54.09	4	2,794	2.0
1,3-Butadiene	C_4H_6	54.09	4	2,690	2.0
iso-Butane	C_4H_{10}	58.12	4	2,957	1.8
n-Butane	C_4H_{10}	58.12	4	2,968	1.8
cis-Butene	C_4H_8	56.11	4	2,830	1.6
iso-Butene	C_4H_8	56.11	4	2,928	1.8
trans-Butene	C_4H_8	56.11	4	2,826	1.7
Carbon Dioxide	CO_2	44.01	1	0	∞
Carbon Monoxide	CO	28.01	1	316	12.5
Cyclopropane	C_3H_6	42.08	3	2,185	2.4
Ethane	C_2H_6	30.07	2	1,595	3.0
Ethylene	C_2H_4	28.05	2	1,477	2.7
Hydrogen	H_2	2.02	0	274	4.0
Methane	CH_4	16.04	1	896	5.0

TABLE 12—INDIVIDUAL COMPONENT PROPERTIES—Continued

Component	Molecular formula	MW_i (pounds per pound-mole)	CMN_i (mole per mole)	NHV_i (British thermal units per standard cubic foot)	LFL_i (volume %)
Methyl-Acetylene	C_3H_4	40.06	3	2,088	1.7
Nitrogen	N_2	28.01	0	0	∞
Oxygen	O_2	32.00	0	0	∞
Pentane+ (C5+)	C_5H_{12}	72.15	5	3,655	1.4
Propadiene	C_3H_4	40.06	3	2,066	2.16
Propane	C_3H_8	44.10	3	2,281	2.1
Propylene	C_3H_6	42.08	3	2,150	2.4
Water	H_2O	18.02	0	0	∞

■ 38. Table 13 is added to Subpart CC to read as follows:

TABLE 13—CALIBRATION AND QUALITY CONTROL REQUIREMENTS FOR CPMS

Parameter	Accuracy requirements	Calibration requirements
Temperature	±1 percent over the normal range of temperature measured or 2.8 degrees Celsius (5 degrees Fahrenheit), whichever is greater, for non-cryogenic temperature ranges.	Performance evaluation annually and following any period of more than 24 hours throughout which the temperature exceeded the maximum rated temperature of the sensor, or the data recorder was off scale. Visual inspections and checks of CPMS operation every 3 months, unless the CPMS has a redundant temperature sensor.
	±2.5 percent over the normal range of temperature measured or 2.8 degrees Celsius (5 degrees Fahrenheit), whichever is greater, for cryogenic temperature ranges.	Select a representative measurement location.
Flow Rate	±5 percent over the normal range of flow measured or 1.9 liters per minute (0.5 gallons per minute), whichever is greater, for liquid flow rate.	Performance evaluation annually and following any period of more than 24 hours throughout which the flow rate exceeded the maximum rated flow rate of the sensor, or the data recorder was off scale. Checks of all mechanical connections for leakage monthly. Visual inspections and checks of CPMS operation every 3 months, unless the CPMS has a redundant flow sensor.
	±5 percent over the normal range of flow measured or 280 liters per minute (10 cubic feet per minute), whichever is greater, for gas flow rate.	Select a representative measurement location where swirling flow or abnormal velocity distributions due to upstream and downstream disturbances at the point of measurement are minimized.
	±5 percent over the normal range measured for mass flow rate.	
Pressure	±5 percent over the normal range measured or 0.12 kilopascals (0.5 inches of water column), whichever is greater.	Checks for obstructions at least once each process operating day (e.g., pressure tap pluggage).
		Performance evaluation annually and following any period of more than 24 hours throughout which the pressure exceeded the maximum rated pressure of the sensor, or the data recorder was off scale. Checks of all mechanical connections for leakage monthly. Visual inspection of all components for integrity, oxidation and galvanic corrosion every 3 months, unless the CPMS has a redundant pressure sensor.
		Select a representative measurement location that minimizes or eliminates pulsating pressure, vibration, and internal and external corrosion.
Net Heating Value by Calorimeter.	±2 percent of span	Specify calibration requirements in your site specific CPMS monitoring plan. Calibration requirements should follow manufacturer's recommendations at a minimum.
		Temperature control (heated and/or cooled as necessary) the sampling system to ensure proper year-round operation.
		Where feasible, select a sampling location at least two equivalent diameters downstream from and 0.5 equivalent diameters upstream from the nearest disturbance. Select the sampling location at least two equivalent duct diameters from the nearest control device, point of pollutant generation, air in-leakages, or other point at which a change in the pollutant concentration or emission rate occurs.
Net Heating Value by Gas Chromatograph.	As specified in Performance Specification 9 of 40 CFR part 60, Appendix B.	Follow the procedure in Performance Specification 9 of 40 CFR part 60, Appendix B

TABLE 13—CALIBRATION AND QUALITY CONTROL REQUIREMENTS FOR CPMS—Continued

Parameter	Accuracy requirements	Calibration requirements
Net Heating Value by Total Hydrocarbon Monitor.	Calibration drift ≤3% of instrument span at each level.	Calibration drift check daily. Follow the procedure in Sections 4.1 and 4.2 of Procedure 1 in 40 CFR part 60, Appendix F.
	Cylinder Gas Audit Accuracy ≤5% of instrument span at each level.	Cylinder gas audit quarterly. Follow the procedure in Section 5.1.2 of Procedure 1 in 40 CFR part 60, Appendix F, except the audit shall be performed every quarter. For both the calibration drift and error tests, the calibration gases should be injected into the sampling system as close to the sampling probe outlet as practical and must pass through all filters, scrubbers, conditioners, and other monitor components used during normal sampling. Select a measurement location that meets the requirements of Section 3.1 of Performance Specification 8A of Appendix B to 40 CFR part 60.

Subpart UUU—[Amended]

■ 39. Section 63.1562 is amended by:
■ (a) Revising paragraph (b)(3) and
■ (b) Revising paragraph (f)(5).
The revisions read as follows:

§ 63.1562 What parts of my plant are covered by this subpart?

* * * * *

(b) * * *

(3) The process vent or group of process vents on Claus or other types of sulfur recovery plant units or the tail gas treatment units serving sulfur recovery plants that are associated with sulfur recovery.

* * * * *

(f) * * *

(5) Gaseous streams routed to a fuel gas system, provided that on and after [THE DATE 3 YEARS AFTER THE DATE OF PUBLICATION OF THE FINAL RULE AMENDMENTS IN THE **FEDERAL REGISTER**], any flares receiving gas from the fuel gas system are in compliance with § 63.670.

■ 40. Section 63.1564 is amended by:
■ a. Revising paragraph (a)(1) introductory text;
■ b. Revising paragraph (a)(1)(i);
■ c. Revising paragraph (a)(1)(ii);
■ d. Revising paragraph (a)(1)(iv);
■ e. Adding paragraph (a)(5);
■ f. Revising paragraph (b)(4)(i);
■ g. Revising paragraph (b)(4)(ii);
■ h. Revising paragraph (b)(4)(iv);
■ i. Adding paragraph (c)(5).
The revisions and additions read as follows:

§ 63.1564 What are my requirements for metal HAP emissions from catalytic cracking units?

(a) * * *

(1) Meet each emission limitation in Table 1 of this subpart that applies to you. If your catalytic cracking unit is subject to the NSPS for PM in § 60.102 or is subject to § 60.102a(b)(1) of this chapter, you must meet the emission limitations for NSPS units. If your catalytic cracking unit is not subject to the NSPS for PM, you can choose from the four options in paragraphs (a)(1)(i) through (iv) of this section:

(i) You can elect to comply with the PM per coke burn-off emission limit (Option 1);

(ii) You can elect to comply with the PM concentration emission limit (Option 2);

* * * * *

(iv) You can elect to comply with the Ni per coke burn-off emission limit (Option 4).

* * * * *

(5) During periods of startup only, if your catalytic cracking unit is followed by an electrostatic precipitator, you can choose from the two options in paragraphs (a)(5)(i) and (ii) of this section:

(i) You can elect to comply with the requirements paragraphs (a)(1) and (2) of this section; or

(ii) You can elect to maintain the opacity in the exhaust gas from your catalyst regenerator at or below 30 percent opacity on a 6-minute average basis.

(b) * * *

(4) * * *

(i) If you elect Option 1 in paragraph (a)(1)(i) of this section, compute the PM emission rate (lb/1,000 lb of coke burn-off) for each run using Equations 1, 2, and 3 (if applicable) of this section and the site-specific opacity limit, if applicable, using Equation 4 of this section as follows:

$$R_c = K_1 Q_r \left(\%CO_2 + \%CO\right) + K_2 Q_a - K_3 Q_r \left[\left(\frac{\%CO}{2}\right) + \%CO_2 + \%O_2\right] + K_3 Q_{oxy}\left(\%O_{xy}\right) \quad \text{(Eq. 1)}$$

Where:

R_c = Coke burn-off rate, kg/hr (lb/hr);

Q_r = Volumetric flow rate of exhaust gas from catalyst regenerator before adding air or gas streams. Example: You may measure upstream or downstream of an electrostatic precipitator, but you must measure upstream of a carbon monoxide boiler, dscm/min (dscf/min). You may use the alternative in either § 63.1573(a)(1) or (a)(2), as applicable, to calculate Q_r;

Q_a = Volumetric flow rate of air to catalytic cracking unit catalyst regenerator, as determined from instruments in the catalytic cracking unit control room, dscm/min (dscf/min);

$\%CO_2$ = Carbon dioxide concentration in regenerator exhaust, percent by volume (dry basis);

%CO = Carbon monoxide concentration in regenerator exhaust, percent by volume (dry basis);

$\%O_2$ = Oxygen concentration in regenerator exhaust, percent by volume (dry basis);

K_1 = Material balance and conversion factor, 0.2982 (kg-min)/(hr-dscm-%) (0.0186 (lb-min)/(hr-dscf-%));

K_2 = Material balance and conversion factor, 2.088 (kg-min)/(hr-dscm) (0.1303 (lb-min)/(hr-dscf));

K_3 = Material balance and conversion factor, 0.0994 (kg-min)/(hr-dscm-%) (0.0062 (lb-min)/(hr-dscf-%));

Q_{oxy} = Volumetric flow rate of oxygen-enriched air stream to regenerator, as determined from instruments in the catalytic cracking unit control room, dscm/min (dscf/min); and

$\%O_{xy}$ = Oxygen concentration in oxygen-enriched air stream, percent by volume (dry basis).

$$E = \frac{K \times C_s \times Q_{sd}}{R_c} \qquad \text{(Eq. 2)}$$

Where:

E = Emission rate of PM, kg/1,000 kg (lb/1,000 lb) of coke burn-off;

C_s = Concentration of PM, g/dscm (lb/dscf);

Q_{sd} = Volumetric flow rate of the catalytic cracking unit catalyst regenerator flue gas as measured by Method 2 in appendix A to part 60 of this chapter, dscm/hr (dscf/hr);

R_c = Coke burn-off rate, kg coke/hr (1,000 lb coke/hr); and

K = Conversion factor, 1.0 (kg^2/g)/(1,000 kg) (1,000 lb/(1,000 lb)).

$$E_s = 1.0 + A\left(\frac{H}{R_c}\right)K' \qquad \text{(Eq. 3)}$$

Where:

E_s = Emission rate of PM allowed, kg/1,000 kg (1b/1,000 lb) of coke burn-off in catalyst regenerator;

1.0 = Emission limitation, kg coke/1,000 kg (lb coke/1,000 lb);

A = Allowable incremental rate of PM emissions. Before [THE DATE 18 MONTHS AFTER THE DATE OF PUBLICATION OF THE FINAL RULE AMENDMENTS IN THE **FEDERAL REGISTER**], A=0.18 g/million cal (0.10 lb/million Btu). On or after [THE DATE 18 MONTHS AFTER THE DATE OF PUBLICATION OF THE FINAL RULE AMENDMENTS IN THE **FEDERAL REGISTER**], A=0 g/million cal (0 lb/million Btu);

H = Heat input rate from solid or liquid fossil fuel, million cal/hr (million Btu/hr). Make sure your permitting authority approves procedures for determining the heat input rate;

R_c = Coke burn-off rate, kg coke/hr (1,000 lb coke/hr) determined using Equation 1 of this section; and

K′ = Conversion factor to units to standard, 1.0 (kg^2/g)/(1,000 kg) (10^3 lb/(1,000 lb)).

$$Opacity\ Limit = Opacity_{st} \times \left(\frac{1\,\text{lb} / 1000\ \text{lb coke burn}}{PMEmR_{st}}\right) \qquad \text{(Eq. 4)}$$

Where:

Opacity Limit = Maximum permissible hourly average opacity, percent, or 10 percent, whichever is greater;

$Opacity_{st}$ = Hourly average opacity measured during the source test, percent; and

$PMEmR_{st}$ = PM emission rate measured during the source test, lb/1,000 lb coke burn.

(ii) If you elect Option 2 in paragraph (a)(1)(ii) of this section, the PM concentration emission limit, determine the average PM concentration from the initial performance test used to certify your PM CEMS.

* * * * *

(iv) If you elect Option 4 in paragraph (a)(1)(iv) of this section, the Ni per coke burn-off emission limit, compute your Ni emission rate using Equations 1 and 8 of this section and your site-specific Ni operating limit (if you use a continuous opacity monitoring system) using Equations 9 and 10 of this section as follows:

$$E_{Ni_2} = \frac{C_{Ni} \times Q_{sd}}{R_c} \qquad \text{(Eq. 8)}$$

Where:

E_{Ni2} = Normalized mass emission rate of Ni, mg/kg coke (lb/1,000 lb coke).

$$Opacity_2 = \frac{1.0\,\text{mg/kgcoke}}{NiEmR2_{st}} \times Opacity_{st} \qquad \text{(Eq. 9)}$$

Where:

$Opacity_2$ = Opacity value for use in Equation 10 of this section, percent, or 10 percent, whichever is greater; and

$NiEmR2_{st}$ = Average Ni emission rate calculated as the arithmetic average Ni emission rate using Equation 8 of this section for each of the performance test runs, mg/kg coke.

$$Ni\ Operating\ Limit_2 = Opacity_2 \times E\text{-}Cat_{st} \times \frac{Q_{mon,st}}{R_{c,st}} \qquad \text{(Eq. 10)}$$

Where:

Ni Operating $Limit_2$ = Maximum permissible hourly average Ni operating limit, percent-ppmw-acfm-hr/kg coke, i.e., your site-specific Ni operating limit; and

$R_{c,st}$ = Coke burn rate from Equation 1 of this section, as measured during the initial performance test, kg coke/hr.

* * * * *

(c) * * *

(5) During periods of startup only, if you elect to comply with the alternative limit in paragraph (a)(5)(ii) of this section, determine continuous compliance by: collecting opacity readings using either a continuous opacity monitoring system according to § 63.1572 or manual opacity observations following EPA Method 9 in Appendix A–4 to part 60 of this chapter; and maintaining each 6-minute average opacity at or below 30 percent.

■ 41. Section 63.1565 is amended by:

■ a. Adding paragraph (a)(5);

■ b. Adding paragraph (b)(1)(iv); and

■ c. Adding paragraph (c)(3).

The additions read as follows:

§ 63.1565 What are my requirements for organic HAP emissions from catalytic cracking units?

(a) * * *

(5) During periods of startup only, if your catalytic cracking unit is not followed by a CO boiler, thermal oxidizer, incinerator, flare or similar combustion device, you can choose from the two options in paragraphs (a)(5)(i) and (ii) of this section:

(i) You can elect to comply with the requirements in paragraphs (a)(1) and (2) of this section; or

(ii) You can elect to maintain the oxygen (O_2) concentration in the exhaust gas from your catalyst regenerator at or above 1 volume percent (dry basis).

(b) * * *

(1) * * *

(iv) If you elect to comply with the alternative limit for periods of startup in paragraph (a)(5)(ii) of this section, you must also install, operate, and maintain a continuous parameter monitoring system to measure and record the oxygen content (percent, dry basis) in the catalyst regenerator vent.

* * * * *

(c) * * *

(3) Demonstrate continuous compliance with the alternative limit in paragraph (a)(5)(ii) of this section by collecting the hourly average oxygen concentration monitoring data according to § 63.1572 and maintaining the hourly average oxygen concentration at or above 1 volume percent (dry basis).

■ 42. Section 63.1566 is amended by:

■ a. Revising paragraph (a)(1) introductory text;

■ b. Revising paragraph (a)(1)(i); and

■ c. Revising paragraph (a)(4).

The revisions read as follows:

§ 63.1566 What are my requirements for organic HAP emissions from catalytic reforming units?

(a) * * *

(1) Meet each emission limitation in Table 15 of this subpart that applies to you. You can choose from the two options in paragraphs (a)(1)(i) and (ii) of this section.

(i) You can elect to vent emissions of total organic compounds (TOC) to a flare (Option 1). On and after [THE DATE 3 YEARS AFTER THE DATE OF PUBLICATION OF THE FINAL RULE AMENDMENTS IN THE **FEDERAL REGISTER**], the flare must meet the requirements of § 63.670. Prior to [THE DATE 3 YEARS AFTER THE DATE OF PUBLICATION OF THE FINAL RULE AMENDMENTS IN THE **FEDERAL REGISTER**], the flare must meet the control device requirements in § 63.11(b) or the requirements of § 63.670.

* * * * *

(4) The emission limitations in Tables 15 and 16 of this subpart do not apply to emissions from process vents during passive depressuring when the reactor vent pressure is 5 pounds per square inch gauge (psig) or less. The emission limitations in Tables 15 and 16 of this subpart do apply to emissions from process vents during active purging operations (when nitrogen or other purge gas is actively introduced to the reactor vessel) or active depressuring (using a vacuum pump, ejector system, or similar device) regardless of the reactor vent pressure.

* * * * *

■ 43. Section 63.1568 is amended by:

■ a. Revising paragraph (a)(1) introductory text;

■ b. Revising paragraph (a)(1)(i);

■ c. Adding paragraph (a)(4);

■ d. Revising paragraph (b)(1); and

■ e. Adding paragraphs (c)(3) and (4).

The revisions and additions read as follows:

§ 63.1568 What are my requirements for HAP emissions from sulfur recovery units?

(a) * * *

(1) Meet each emission limitation in Table 29 of this subpart that applies to you. If your sulfur recovery unit is subject to the NSPS for sulfur oxides in § 60.104 or in § 60.102a(f)(1) of this chapter, you must meet the emission limitations for NSPS units. If your sulfur recovery unit is not subject to one of these NSPS for sulfur oxides, you can choose from the options in paragraphs (a)(1)(i) through (ii) of this section:

(i) You can elect to meet the NSPS requirements in § 60.104(a)(2) or in § 60.102a(f)(1) of this chapter (Option 1); or

* * * * *

(4) During periods of shutdown only, you can choose from the three options in paragraphs (a)(4)(i) through (iii) of this section.

(i) You can elect to comply with the requirements in paragraphs (a)(1) and (2) of this section.

(ii) You can elect to send any shutdown purge gases to a flare. On and after [THE DATE 3 YEARS AFTER THE DATE OF PUBLICATION OF THE FINAL RULE AMENDMENTS IN THE **FEDERAL REGISTER**], the flare must meet the requirements of § 63.670. Prior to [THE DATE 3 YEARS AFTER THE DATE OF PUBLICATION OF THE FINAL RULE AMENDMENTS IN THE **FEDERAL REGISTER**], the flare must meet the design and operating requirements in § 63.11(b) or the requirements of § 63.670.

(iii) You can elect to send any shutdown purge gases to a to a thermal oxidizer or incinerator operated at a minimum hourly average temperature of 1,200 degrees Fahrenheit and a minimum hourly average outlet oxygen (O_2) concentration of 2 volume percent (dry basis).

(b) * * *

(1) Install, operate, and maintain a continuous monitoring system according to the requirements in § 63.1572 and Table 31 of this subpart. Except:

(i) If you elect to comply with the alternative limit for periods of shutdown in paragraph (a)(4)(ii) of this section, then on and after [THE DATE 3 YEARS AFTER THE DATE OF PUBLICATION OF THE FINAL RULE AMENDMENTS IN THE **FEDERAL REGISTER**], you must also install, operate, calibrate, and maintain monitoring systems as specified in §§ 63.670 and 63.671. Prior to [THE DATE 3 YEARS AFTER THE DATE OF PUBLICATION OF THE FINAL RULE AMENDMENTS IN THE **FEDERAL REGISTER**], you must either install, operate, and maintain continuous parameter monitoring systems following the requirements in § 63.11 (to detect the presence of a flame; to measure and record the net heating value of the gas being combusted; and to measure and record the volumetric flow of the gas being combusted) or install, operate, calibrate, and maintain monitoring systems as specified in §§ 63.670 and 63.671.

(ii) If you elect to comply with the alternative limit for periods of

shutdown in paragraph (a)(4)(iii) of this section, you must also install, operate, and maintain continuous parameter monitoring system to measure and record the temperature and oxygen content (percent, dry basis) in the vent from the thermal oxidizer or incinerator.

* * * * *

(c) * * *

(3) Demonstrate continuous compliance with the alternative limit in paragraph (a)(4)(ii) of this section by meeting the requirements of either paragraph (c)(3)(i) or (ii) of this section.

(i) On and after [THE DATE 3 YEARS AFTER THE DATE OF PUBLICATION OF THE FINAL RULE AMENDMENTS IN THE **FEDERAL REGISTER**], you must meet the requirements of paragraphs (c)(3)(i)(A) through (C) of this section.

(A) Collect the flare monitoring data according to §§ 63.670 and 63.671.

(B) Keep the records specified in § 63.655(i)(9).

(C) Maintain the selected operating parameters as specified in § 63.670.

(ii) Prior to [THE DATE 3 YEARS AFTER THE DATE OF PUBLICATION OF THE FINAL RULE AMENDMENTS IN THE **FEDERAL REGISTER**], you must either meet the requirements of paragraph (c)(3)(i) of this section or meet the requirements of paragraphs (c)(3)(ii)(A) through (D) of this section.

(A) Collect the flare monitoring data according to § 63.1572.

(B) Record for each 1-hour period whether the monitor was continuously operating and the pilot light was continuously present during each 1-hour period.

(C) Maintain the net heating value of the gas being combusted at or above the applicable limits in § 63.11.

(D) Maintain the exit velocity at or below the applicable maximum exit velocity specified in § 63.11.

(4) Demonstrate continuous compliance with the alternative limit in paragraph (a)(4)(iii) of this section by collecting the hourly average temperature and oxygen concentration monitoring data according to § 63.1572; maintaining the hourly average temperature at or above 1,200 degrees Fahrenheit; and maintaining the hourly average oxygen concentration at or above 2 volume percent (dry basis).

■ 44. Section 63.1570 is amended by:

■ a. Revising paragraphs (a) through (d); and

■ b. Removing and reserving paragraph (g).

The revisions read as follows:

§ 63.1570 What are my general requirements for complying with this subpart?

(a) You must be in compliance with all of the non-opacity standards in this subpart at all times.

(b) You must be in compliance with the opacity and visible emission limits in this subpart at all times.

(c) At all times, you must operate and maintain any affected source, including associated air pollution control equipment and monitoring equipment, in a manner consistent with safety and good air pollution control practices for minimizing emissions. The general duty to minimize emissions does not require you to make any further efforts to reduce emissions if levels required by the applicable standard have been achieved. Determination of whether a source is operating in compliance with operation and maintenance requirements will be based on information available to the Administrator which may include, but is not limited to, monitoring results, review of operation and maintenance procedures, review of operation and maintenance records, and inspection of the source.

(d) During the period between the compliance date specified for your affected source and the date upon which continuous monitoring systems have been installed and validated and any applicable operating limits have been set, you must maintain a log detailing the operation and maintenance of the process and emissions control equipment.

* * * * *

■ 45. Section 63.1571 is amended by:

■ a. Adding paragraph (a)(5);

■ b. Revising paragraph (b)(1);

■ c. Removing paragraph (b)(4);

■ d. Redesignating paragraph (b)(5) as (b)(4);

■ e. Revising paragraphs (d)(2) and (d)(4).

The revisions and additions read as follows:

§ 63.1571 How and when do I conduct a performance test or other initial compliance demonstration?

(a) * * *

(5) Conduct a performance test for PM or Ni, as applicable, from catalytic cracking units at least once every 5 years for those units monitored with CPMS, BLD, or COMS. You must conduct the first periodic performance test no later than [THE DATE 18 MONTHS AFTER THE DATE OF PUBLICATION OF THE FINAL RULE AMENDMENTS IN THE **FEDERAL REGISTER**]. Those units monitoring PM concentration with a PM CEMS are not required to conduct a periodic PM performance test.

(b) * * *

(1) Conduct performance tests under such conditions as the Administrator specifies to you based on representative performance of the affected source for the period being tested. Representative conditions exclude periods of startup and shutdown unless specified by the Administrator or an applicable subpart. You may not conduct performance tests during periods of malfunction. You must record the process information that is necessary to document operating conditions during the test and include in such record an explanation to support that such conditions represent normal operation. Upon request, you must make available to the Administrator such records as may be necessary to determine the conditions of performance tests.

* * * * *

(d) * * *

(2) If you must meet the HAP metal emission limitations in § 63.1564, you elect the option in paragraph (a)(1)(iv) in § 63.1564 (Ni per coke burn-off), and you use continuous parameter monitoring systems, you must establish an operating limit for the equilibrium catalyst Ni concentration based on the laboratory analysis of the equilibrium catalyst Ni concentration from the initial performance test. Section 63.1564(b)(2) allows you to adjust the laboratory measurements of the equilibrium catalyst Ni concentration to the maximum level. You must make this adjustment using Equation 2 of this section as follows:

$$Ecat\text{-}Limit = \frac{1.0\,\text{mg/kgcokeburn-off}}{NiEmR2_{st}} \times Ecat_{st} \qquad \text{(Eq. 2)}$$

Where:

$NiEmR2_{st}$ = Average Ni emission rate calculated as the arithmetic average Ni emission rate using Equation 8 of § 63.1564 for each performance test run, mg/kg coke burn-off.

* * * * *

(4) Except as specified in paragraph (d)(3) of this section, if you use continuous parameter monitoring systems, you may adjust one of your monitored operating parameters (flow rate, total power and secondary current, pressure drop, liquid-to-gas ratio) from the average of measured values during the performance test to the maximum value (or minimum value, if applicable) representative of worst-case operating conditions, if necessary. This adjustment of measured values may be done using control device design specifications, manufacturer recommendations, or other applicable information. You must provide supporting documentation and rationale in your Notification of Compliance Status, demonstrating to the satisfaction of your permitting authority, that your affected source complies with the applicable emission limit at the operating limit based on adjusted values.

* * * * *

■ 46. Section 63.1572 is amended by:

■ a. Revising paragraphs (c) introductory text, (c)(1), (c)(3) and (c)(4); and

■ b. Revising paragraphs (d)(1) and (2).

The revisions read as follows:

§ 63.1572 What are my monitoring installation, operation, and maintenance requirements?

* * * * *

(c) Except for flare monitoring systems, you must install, operate, and maintain each continuous parameter monitoring system according to the requirements in paragraphs (c)(1) through (5) of this section. For flares, on and after [THE DATE 3 YEARS AFTER THE DATE OF PUBLICATION OF THE FINAL RULE AMENDMENTS IN THE **FEDERAL REGISTER**], you must install, operate, calibrate, and maintain monitoring systems as specified in §§ 63.670 and 63.671. Prior to [THE DATE 3 YEARS AFTER THE DATE OF PUBLICATION OF THE FINAL RULE AMENDMENTS IN THE **FEDERAL REGISTER**], you must either meet the monitoring system requirements in paragraphs (c)(1) through (5) of this section or meet the requirements in §§ 63.670 and 63.671.

(1) You must install, operate, and maintain each continuous parameter monitoring system according to the requirements in Table 41 of this subpart. You must also meet the equipment specifications in Table 41 of this subpart if pH strips or colormetric tube sampling systems are used. You must meet the requirements in Table 41 of this subpart for BLD systems.

* * * * *

(3) Each continuous parameter monitoring system must have valid hourly average data from at least 75 percent of the hours during which the process operated, except for BLD systems.

(4) Each continuous parameter monitoring system must determine and record the hourly average of all recorded readings and if applicable, the daily average of all recorded readings for each operating day, except for BLD systems. The daily average must cover a 24-hour period if operation is continuous or the number of hours of operation per day if operation is not continuous, except for BLD systems.

* * * * *

(d) * * *

(1) You must conduct all monitoring in continuous operation (or collect data at all required intervals) at all times the affected source is operating.

(2) You may not use data recorded during required quality assurance or control activities (including, as applicable, calibration checks and required zero and span adjustments) for purposes of this regulation, including data averages and calculations, for fulfilling a minimum data availability requirement, if applicable. You must use all the data collected during all other periods in assessing the operation of the control device and associated control system.

■ 47. Section 63.1573 is amended by:

■ a. Redesignating paragraphs (b), (c), (d), (e) and (f) as paragraphs (c), (d), (e), (f) and (g);

■ b. Adding paragraph (b);

■ c. Revising newly redesignated paragraph (c) introductory text;

■ d. Revising newly redesignated paragraph (d) introductory text;

■ e. Revising newly redesignated paragraph (f) introductory text; and

■ f. Revising newly redesignated paragraph (g)(1).

The revisions and additions read as follows:

§ 63.1573 What are my monitoring alternatives?

* * * * *

(b) *What is the approved alternative for monitoring pressure drop?* You may use this alternative to a continuous parameter monitoring system for pressure drop if you operate a jet ejector type wet scrubber or other type of wet scrubber equipped with atomizing spray nozzles. You shall:

(1) Conduct a daily check of the air or water pressure to the spray nozzles;

(2) Maintain records of the results of each daily check; and

(3) Repair or replace faulty (e.g., leaking or plugged) air or water lines within 12 hours of identification of an abnormal pressure reading.

(c) *What is the approved alternative for monitoring pH or alkalinity levels?* You may use the alternative in paragraph (c)(1) or (2) of this section for a catalytic reforming unit.

* * * * *

(d) *Can I use another type of monitoring system?* You may request approval from your permitting authority to use an automated data compression system. An automated data compression system does not record monitored operating parameter values at a set frequency (e.g., once every hour) but records all values that meet set criteria for variation from previously recorded values. Your request must contain a description of the monitoring system and data recording system, including the criteria used to determine which monitored values are recorded and retained, the method for calculating daily averages, and a demonstration that the system meets all of the criteria in paragraphs (d)(1) through (5) of this section:

* * * * *

(f) *How do I request to monitor alternative parameters?* You must submit a request for review and approval or disapproval to the Administrator. The request must include the information in paragraphs (f)(1) through (5) of this section.

* * * * *

(g) * * *

(1) You may request alternative monitoring requirements according to the procedures in this paragraph if you meet each of the conditions in paragraphs (g)(1)(i) through (iii) of this section:

* * * * *

■ 48. Section 63.1574 is amended by revising (a)(3) to read as follows:

§ 63.1574 What notifications must I submit and when?

(a) * * *

(3) If you are required to conduct an initial performance test, performance evaluation, design evaluation, opacity observation, visible emission observation, or other initial compliance demonstration, you must submit a notification of compliance status according to § 63.9(h)(2)(ii). You can submit this information in an operating

permit application, in an amendment to an operating permit application, in a separate submission, or in any combination. In a State with an approved operating permit program where delegation of authority under section 112(l) of the CAA has not been requested or approved, you must provide a duplicate notification to the applicable Regional Administrator. If the required information has been submitted previously, you do not have to provide a separate notification of compliance status. Just refer to the earlier submissions instead of duplicating and resubmitting the previously submitted information.

* * * * *

■ 49. Section 63.1575 is amended by:

■ a. Revising paragraphs (d) introductory text, (d)(1) and (2);

■ b. Adding paragraph (d)(4);

■ c. Revising paragraph (e) introductory text;

■ d. Removing and reserving paragraph (e)(1);

■ e. Revising paragraphs (e)(4) and (e)(6);

■ f. Revising paragraphs (f)(1) and (2);

■ g. Removing and reserving paragraph (h); and

■ h. Adding paragraph (k).

The revisions and additions read as follows:

§ 63.1575 What reports must I submit and when?

* * * * *

(d) For each deviation from an emission limitation and for each deviation from the requirements for work practice standards that occurs at an affected source where you are not using a continuous opacity monitoring system or a continuous emission monitoring system to comply with the emission limitation or work practice standard in this subpart, the semiannual compliance report must contain the information in paragraphs (c)(1) through (3) of this section and the information in paragraphs (d)(1) through (4) of this section.

(1) The total operating time of each affected source during the reporting period and identification of the sources for which there was a deviation.

(2) Information on the number, date, time, duration, and cause of deviations (including unknown cause, if applicable).

* * * * *

(4) The applicable operating limit or work practice standard from which you deviated and either the parameter monitor reading during the deviation or a description of how you deviated from the work practice standard.

(e) For each deviation from an emission limitation occurring at an affected source where you are using a continuous opacity monitoring system or a continuous emission monitoring system to comply with the emission limitation, you must include the information in paragraphs (c)(1) through (3) of this section, in paragraphs (d)(1) through (3) of this section, and in paragraphs (e)(2) through (13) of this section.

(1) [Reserved]

* * * * *

(4) An estimate of the quantity of each regulated pollutant emitted over the emission limit during the deviation, and a description of the method used to estimate the emissions.

* * * * *

(6) A breakdown of the total duration of the deviations during the reporting period and into those that are due to control equipment problems, process problems, other known causes, and other unknown causes.

* * * * *

(f) * * *

(1) You must include the information in paragraph (c)(1)(i) or (c)(1)(ii) of this section, if applicable.

(i) If you are complying with paragraph (k)(1) of this section, a summary of the results of any performance test done during the reporting period on any affected unit. Results of the performance test include the identification of the source tested, the date of the test, the percentage of emissions reduction or outlet pollutant concentration reduction (whichever is needed to determine compliance) for each run and for the average of all runs, and the values of the monitored operating parameters.

(ii) If you are not complying with paragraph (k)(1) of this section, a copy of any performance test done during the reporting period on any affected unit. The report may be included in the next semiannual compliance report. The copy must include a complete report for each test method used for a particular kind of emission point tested. For additional tests performed for a similar emission point using the same method, you must submit the results and any other information required, but a complete test report is not required. A complete test report contains a brief process description; a simplified flow diagram showing affected processes, control equipment, and sampling point locations; sampling site data; description of sampling and analysis procedures and any modifications to standard procedures; quality assurance procedures; record of operating conditions during the test; record of preparation of standards; record of calibrations; raw data sheets for field sampling; raw data sheets for field and laboratory analyses; documentation of calculations; and any other information required by the test method.

(2) Any requested change in the applicability of an emission standard (e.g., you want to change from the PM standard to the Ni standard for catalytic cracking units or from the HCl concentration standard to percent reduction for catalytic reforming units) in your compliance report. You must include all information and data necessary to demonstrate compliance with the new emission standard selected and any other associated requirements.

* * * * *

(k) *Electronic submittal of performance test and CEMS performance evaluation data.* On and after [THE DATE 3 YEARS AFTER DATE OF PUBLICATION OF THE FINAL RULE AMENDMENTS IN THE **FEDERAL REGISTER**], if required to submit the results of a performance test or CEMS performance evaluation, you must submit the results using EPA's Electronic Reporting Tool (ERT) according to the procedures in paragraphs (k)(1) and (2) of this section.

(1) Within 60 days after the date of completing each performance test as required by this subpart, you must submit the results of the performance tests according to the method specified by either paragraph (k)(1)(i) or (k)(1)(ii) of this section.

(i) For data collected using test methods supported by the EPA's ERT as listed on the EPA's ERT Web site (*http://www.epa.gov/ttn/chief/ert/index.html*), you must submit the results of the performance test to the Compliance and Emissions Data Reporting Interface (CEDRI) accessed through the EPA's Central Data Exchange (CDX) (*http://cdx.epa.gov/epa_home.asp*), unless the Administrator approves another approach. Performance test data must be submitted in a file format generated through use of the EPA's ERT. If you claim that some of the performance test information being submitted is confidential business information (CBI), you must submit a complete file generated through the use of the EPA's ERT, including information claimed to be CBI, on a compact disc or other commonly used electronic storage media (including, but not limited to, flash drives) by registered letter to the EPA. The electronic media must be clearly marked as CBI and mailed to

U.S. EPA/OAQPS/CORE CBI Office, Attention: WebFIRE Administrator, MD C404–02, 4930 Old Page Rd., Durham, NC 27703. The same ERT file with the CBI omitted must be submitted to the EPA via CDX as described earlier in this paragraph.

(ii) For data collected using test methods that are not supported by the EPA's ERT as listed on the EPA's ERT Web site, you must submit the results of the performance test to the Administrator at the appropriate address listed in § 63.13.

(2) Within 60 days after the date of completing each CEMS performance evaluation test required by § 63.1571(a) and (b), you must submit the results of the performance evaluation according to the method specified by either paragraph (k)(2)(i) or (k)(2)(ii) of this section.

(i) For data collection of relative accuracy test audit (RATA) pollutants that are supported by the EPA's ERT as listed on the ERT Web site, the owner or operator must submit the results of the performance evaluation to the CEDRI that is accessed through the EPA's CDX, unless the Administrator approves another approach. Performance evaluation data must be submitted in a file format generated through the use of the EPA's ERT. If an owner or operator claims that some of the performance evaluation information being submitted is CBI, the owner or operator must submit a complete file generated through the use of the EPA's ERT, including information claimed to be CBI, on a compact disc or other commonly used electronic storage media (including, but not limited to, flash drives) by registered letter to the EPA. The electronic media must be clearly marked as CBI and mailed to U.S. EPA/OAQPS/CORE CBI Office, Attention: WebFIRE Administrator, MD C404–02, 4930 Old Page Rd., Durham, NC 27703. The same ERT file with the CBI omitted must be submitted to the EPA via CDX as described earlier in this paragraph.

(ii) For any performance evaluation data with RATA pollutants that are not supported by the EPA's ERT as listed on the EPA's ERT Web site, you must submit the results of the performance evaluation to the Administrator at the appropriate address listed in § 63.13.

■ 50. Section 63.1576 is amended by:

■ a. Revising paragraph (a)(2);

■ b. Revising paragraphs (b)(3) and (5).

The revisions read as follows:

§ 63.1576 What records must I keep, in what form, and for how long?

(a) * * *

(2) The records specified in paragraphs (a)(2)(i) through (iv) of this section.

(i) Record the date, time, and duration of each startup and/or shutdown period, recording the periods when the affected source was subject to the standard applicable to startup and shutdown.

(ii) In the event that an affected unit fails to meet an applicable standard, record the number of failures. For each failure record the date, time and duration of each failure.

(iii) For each failure to meet an applicable standard, record and retain a list of the affected sources or equipment, an estimate of the volume of each regulated pollutant emitted over any emission limit and a description of the method used to estimate the emissions.

(iv) Record actions taken to minimize emissions in accordance with § 63.1570(c) and any corrective actions taken to return the affected unit to its normal or usual manner of operation.

* * * * *

(b) * * *

(3) The performance evaluation plan as described in § 63.8(d)(2) for the life of the affected source or until the affected source is no longer subject to the provisions of this part, to be made available for inspection, upon request, by the Administrator. If the performance evaluation plan is revised, you must keep previous (i.e., superseded) versions of the performance evaluation plan on record to be made available for inspection, upon request, by the Administrator, for a period of 5 years after each revision to the plan. The program of corrective action should be included in the plan required under § 63.8(d)(2).

* * * * *

(5) Records of the date and time that each deviation started and stopped.

* * * * *

■ 51. Section 63.1579 is amended by:

■ a. Revising section introductory text and

■ b. Revising the definitions of ''Deviation,'' and ''PM.''

The revisions read as follows:

§ 63.1579 What definitions apply to this subpart?

Terms used in this subpart are defined in the Clean Air Act (CAA), in 40 CFR 63.2, the General Provisions of this part (§§ 63.1 through 63.15), and in this section as listed. If the same term is defined in subpart A and in this section, it shall have the meaning given in this section for purposes of this subpart.

* * * * *

Deviation means any instance in which an affected source subject to this subpart, or an owner or operator of such a source:

(1) Fails to meet any requirement or obligation established by this subpart, including but not limited to any emission limit, operating limit, or work practice standard; or

(2) Fails to meet any term or condition that is adopted to implement an applicable requirement in this subpart and that is included in the operating permit for any affected source required to obtain such a permit.

* * * * *

PM means, for the purposes of this subpart, emissions of particulate matter that serve as a surrogate measure of the total emissions of particulate matter and metal HAP contained in the particulate matter, including but not limited to: antimony, arsenic, beryllium, cadmium, chromium, cobalt, lead, manganese, nickel, and selenium as measured by Methods 5, 5B or 5F in Appendix A–3 to part 60 of this chapter or by an approved alternative method.

* * * * *

■ 52. Table 1 to subpart UUU of part 63 is revised to read as follows:

As stated in § 63.1564(a)(1), you shall meet each emission limitation in the following table that applies to you.

TABLE 1 TO SUBPART UUU OF PART 63—METAL HAP EMISSION LIMITS FOR CATALYTIC CRACKING UNITS

For each new or existing catalytic cracking unit . . .	You shall meet the following emission limits for each catalyst regenerator vent . . .
1. Subject to new source performance standard (NSPS) for PM in 40 CFR 60.102.	PM emissions must not exceed 1.0 gram per kilogram (g/kg) (1.0 lb/1,000 lb) of coke burn-off. Before [THE DATE 18 MONTHS AFTER THE DATE OF PUBLICATION OF THE FINAL RULE AMENDMENTS IN THE FEDERAL REGISTER], if the discharged gases pass through an incinerator or waste heat boiler in which you burn auxiliary or in supplemental liquid or solid fossil fuel, the incremental rate of PM emissions must not exceed 43.0 grams per Gigajoule (g/GJ) or 0.10 pounds per million British thermal units (lb/million Btu) of heat input attributable to the liquid or solid fossil fuel; and the opacity of emissions must not exceed 30 percent, except for one 6-minute average opacity reading in any 1-hour period.
2. Subject to NSPS for PM in 40 CFR 60.102a(b)(1)(i)	PM emissions must not exceed 1.0 g/kg (1.0 lb PM/1,000 lb) of coke burn-off or, if a PM CEMS is used, 0.040 grain per dry standard cubic feet (gr/dscf) corrected to 0 percent excess air.
3. Subject to NSPS for PM in 40 CFR 60.102a(b)(1)(ii)	PM emissions must not exceed 0.5 g/kg coke burn-off (0.5 lb/1000 lb coke burn-off) or, if a PM CEMS is used, 0.020 gr/dscf corrected to 0 percent excess air.
4. Option 1: PM per coke burn-off limit, not subject to the NSPS for PM in 40 CFR 60.102 or in 40 CFR 60.102a(b)(1).	PM emissions must not exceed the limits specified in Item 1 of this table.
5. Option 2: PM concentration limit, not subject to the NSPS for PM in 40 CFR 60.102 or in 40 CFR 60.102a(b)(1).	PM emissions must not exceed 0.040 gr/dscf corrected to 0 percent excess air.
6. Option 3: Ni lb/hr limit, not subject to the NSPS for PM in 40 CFR 60.102 or in 40 CFR 60.102a(b)(1).	Nickel (Ni) emissions must not exceed 13,000 milligrams per hour (mg/hr) (0.029 lb/hr).
7. Option 4: Ni per coke burn-off limit, not subject to the NSPS for PM in 40 CFR 60.102 or in 40 CFR 60.102a(b)(1).	Ni emissions must not exceed 1.0 mg/kg (0.001 lb/1,000 lb) of coke burn-off in the catalyst regenerator.

■ 53. Table 2 to subpart UUU of part 63 is revised to read as follows:

As stated in § 63.1564(a)(2), you shall meet each operating limit in the following table that applies to you.

TABLE 2 TO SUBPART UUU OF PART 63—OPERATING LIMITS FOR METAL HAP EMISSIONS FROM CATALYTIC CRACKING UNITS

For each new or existing catalytic cracking unit . . .	For this type of continuous monitoring system . . .	For this type of control device . . .	You shall meet this operating limit . . .
1. Subject to the NSPS for PM in 40 CFR 60.102.	a. Continuous opacity monitoring system used to comply with the 30 percent opacity limit in 40 CFR 60.102 before [THE DATE 18 MONTHS AFTER THE DATE OF PUBLICATION OF THE FINAL RULE AMENDMENTS IN THE **FEDERAL REGISTER**].	Not applicable	Not applicable.
	b. Continuous opacity monitoring system used to comply with a site-specific opacity limit.	Cyclone, fabric filter, or electrostatic precipitator.	Maintain the 3-hour rolling average opacity of emissions from your catalyst regenerator vent no higher than the site-specific opacity limit established during the performance test.
	c. Continuous parameter monitoring systems.	Electrostatic precipitator	Maintain the daily average coke burn-off rate or daily average flow rate no higher than the limit established in the performance test; and maintain the 3-hour rolling average total power and secondary current above the limit established in the performance test.
	d. Continuous parameter monitoring systems.	Wet scrubber	Maintain the 3-hour rolling average pressure drop above the limit established in the performance test; and maintain the 3-hour rolling average liquid-to-gas ratio above the limit established in the performance test.

TABLE 2 TO SUBPART UUU OF PART 63—OPERATING LIMITS FOR METAL HAP EMISSIONS FROM CATALYTIC CRACKING UNITS—Continued

For each new or existing catalytic cracking unit . . .	For this type of continuous monitoring system . . .	For this type of control device . . .	You shall meet this operating limit . . .
	e. Bag leak detection (BLD) system.	Fabric filter	Maintain particulate loading below the BLD alarm set point established in the initial adjustment of the BLD system or allowable seasonal adjustments.
2. Subject to NSPS for PM in 40 CFR 60.102a(b)(1)(i).	a. PM CEMS	Not applicable	Not applicable.
	b. Continuous opacity monitoring system used to comply with a site-specific opacity limit.	Cyclone or electrostatic precipitator.	Maintain the 3-hour rolling average opacity of emissions from your catalyst regenerator vent no higher than the site-specific opacity limit established during the performance test.
	c. Continuous parameter monitoring systems.	Electrostatic precipitator	Maintain the daily average coke burn-off rate or daily average flow rate no higher than the limit established in the performance test; and maintain the 3-hour rolling average total power and secondary current above the limit established in the performance test.
	d. Continuous parameter monitoring systems.	Wet scrubber	Maintain the 3-hour rolling average pressure drop above the limit established in the performance test; and maintain the 3-hour rolling average liquid-to-gas ratio above the limit established in the performance test.
	e. Bag leak detection (BLD) system.	Fabric filter	Maintain particulate loading below the BLD alarm set point established in the initial adjustment of the BLD system or allowable seasonal adjustments.
3. Subject to NSPS for PM in 40 CFR 60.102a(b)(1)(ii).	Any	Any	The applicable operating limits in Item 2 of this table.
4. Option 1: PM per coke burn-off limit not subject to the NSPS for PM in 40 CFR 60.102 or 40 CFR 60.102a(b)(1).	a. Continuous opacity monitoring system used to comply with a site-specific opacity limit.	Cyclone, fabric filter, or electrostatic precipitator.	Maintain the 3-hour rolling average opacity of emissions from your catalyst regenerator vent no higher than the site-specific opacity limit established during the performance test. Alternatively, before [THE DATE 18 MONTHS AFTER THE DATE OF PUBLICATION OF THE FINAL RULE AMENDMENTS IN THE **FEDERAL REGISTER**], you may maintain the hourly average opacity of emissions from your catalyst generator vent no higher than the site-specific opacity limit established during the performance test.
	b. Continuous parameter monitoring systems.	i. Electrostatic precipitator	(1) Maintain the daily average gas flow rate or daily average coke burn-off rate no higher than the limit established in the performance test.

TABLE 2 TO SUBPART UUU OF PART 63—OPERATING LIMITS FOR METAL HAP EMISSIONS FROM CATALYTIC CRACKING UNITS—Continued

For each new or existing catalytic cracking unit . . .	For this type of continuous monitoring system . . .	For this type of control device . . .	You shall meet this operating limit . . .
			(2) Maintain the 3-hour rolling average total power and secondary current above the limit established in the performance test. Alternatively, before [THE DATE 18 MONTHS AFTER THE DATE OF PUBLICATION OF THE FINAL RULE AMENDMENTS IN THE **FEDERAL REGISTER**], you may maintain the daily average voltage and secondary current (or total power input) above the limit established in the performance test.
		ii. Wet scrubber	(1) Maintain the 3-hour rolling average pressure drop above the limit established in the performance test. Alternatively, before [THE DATE 18 MONTHS AFTER THE DATE OF PUBLICATION OF THE FINAL RULE AMENDMENTS IN THE **FEDERAL REGISTER**], you may maintain the daily average pressure drop above the limit established in the performance test (not applicable to a wet scrubber of the non-venturi jet-ejector design).
			(2) Maintain the 3-hour rolling average liquid-to-gas ratio above the limit established in the performance test. Alternatively, before [THE DATE 18 MONTHS AFTER THE DATE OF PUBLICATION OF THE FINAL RULE AMENDMENTS IN THE **FEDERAL REGISTER**], you may maintain the daily average liquid-to-gas ratio above the limit established in the performance test.
	c. Bag leak detection (BLD) system.	Fabric filter	Maintain particulate loading below the BLD alarm set point established in the initial adjustment of the BLD system or allowable seasonal adjustments.
5. Option 2: PM concentration limit not subject to the NSPS for PM in 40 CFR 60.102 or 40 CFR 60.102a(b)(1).	PM CEMS	Any	Not applicable.
6. Option 3: Ni lb/hr limit not subject to the NSPS for PM in 40 CFR 60.102.	a. Continuous opacity monitoring system.	Cyclone, fabric filter, or electrostatic precipitator.	Maintain the 3-hour rolling average Ni operating value no higher than the limit established during the performance test. Alternatively, before [THE DATE 18 MONTHS AFTER THE DATE OF PUBLICATION OF THE FINAL RULE AMENDMENTS IN THE **FEDERAL REGISTER**], you may maintain the daily average Ni operating value no higher than the limit established during the performance test.

TABLE 2 TO SUBPART UUU OF PART 63—OPERATING LIMITS FOR METAL HAP EMISSIONS FROM CATALYTIC CRACKING UNITS—Continued

For each new or existing catalytic cracking unit . . .	For this type of continuous monitoring system . . .	For this type of control device . . .	You shall meet this operating limit . . .
	b. Continuous parameter monitoring systems.	i. Electrostatic precipitator	(1) Maintain the daily average gas flow rate or daily average coke burn-off rate no higher than the limit established during the performance test. (2) Maintain the monthly rolling average of the equilibrium catalyst Ni concentration no higher than the limit established during the performance test. (3) Maintain the 3-hour rolling average total power and secondary current above the limit established in the performance test. Alternatively, before [THE DATE 18 MONTHS AFTER THE DATE OF PUBLICATION OF THE FINAL RULE AMENDMENTS IN THE **FEDERAL REGISTER**], you may maintain the daily average voltage and secondary current (or total power input) above the established during the performance test.
		ii. Wet scrubber	(1) Maintain the monthly rolling average of the equilibrium catalyst Ni concentration no higher than the limit established during the performance test. (2) Maintain the 3-hour rolling average pressure drop above the limit established in the performance test. Alternatively, before [THE DATE 18 MONTHS AFTER THE DATE OF PUBLICATION OF THE FINAL RULE AMENDMENTS IN THE **FEDERAL REGISTER**], you may maintain the daily average pressure drop above the limit established during the performance test (not applicable to a non-venturi wet scrubber of the jet-ejector design). (3) Maintain the 3-hour rolling average liquid-to-gas ratio above the limit established in the performance test. Alternatively, before [THE DATE 18 MONTHS AFTER THE DATE OF PUBLICATION OF THE FINAL RULE AMENDMENTS IN THE **FEDERAL REGISTER**], you may maintain the daily average liquid-to-gas ratio above the limit established during the performance test.

TABLE 2 TO SUBPART UUU OF PART 63—OPERATING LIMITS FOR METAL HAP EMISSIONS FROM CATALYTIC CRACKING UNITS—Continued

For each new or existing catalytic cracking unit . . .	For this type of continuous monitoring system . . .	For this type of control device . . .	You shall meet this operating limit . . .
7. Option 4: Ni per coke burn-off limit not subject to the NSPS for PM in 40 CFR 60.102.	a. Continuous opacity monitoring system.	Cyclone, baghouse, or electrostatic precipitator.	Maintain the 3-hour rolling average Ni operating value no higher than Ni operating limit established during the performance test. Alternatively, before [THE DATE 18 MONTHS AFTER THE DATE OF PUBLICATION OF THE FINAL RULE AMENDMENTS IN THE **FEDERAL REGISTER**], you may elect to maintain the daily average Ni operating value no higher than the Ni operating limit established during the performance test.
	b. Continuous parameter monitoring systems.	i. Electrostatic precipitator	(1) Maintain the monthly rolling average of the equilibrium catalyst Ni concentration no higher than the limit established during the performance test. (2) Maintain the 3-hour rolling average total power and secondary current above the limit established in the performance test. Alternatively, before [THE DATE 18 MONTHS AFTER THE DATE OF PUBLICATION OF THE FINAL RULE AMENDMENTS IN THE **FEDERAL REGISTER**], you may maintain the daily average voltage and secondary current (or total power input) above the limit established during the performance test.
		ii. Wet scrubber	(1) Maintain the monthly rolling average of the equilibrium catalyst Ni concentration no higher than the limit established during the performance test. (2) Maintain the 3-hour rolling average pressure drop above the limit established in the performance test. Alternatively, before [THE DATE 18 MONTHS AFTER THE DATE OF PUBLICATION OF THE FINAL RULE AMENDMENTS IN THE **FEDERAL REGISTER**], you may maintain the daily average pressure drop above the limit established during the performance test (not applicable to a non-venturi wet scrubber of the jet-ejector design). (3) Maintain the 3-hour rolling average liquid-to-gas ratio above the limit established in the performance test. Alternatively, before [THE DATE 18 MONTHS AFTER THE DATE OF PUBLICATION OF THE FINAL RULE AMENDMENTS IN THE **FEDERAL REGISTER**], you may maintain the daily average liquid-to-gas ratio above the limit established during the performance test.

■ 54. Table 3 to subpart UUU of part 63 is revised to read as follows:

As stated in § 63.1564(b)(1), you shall meet each requirement in the following table that applies to you.

TABLE 3 TO SUBPART UUU OF PART 63—CONTINUOUS MONITORING SYSTEMS FOR METAL HAP EMISSIONS FROM CATALYTIC CRACKING UNITS

For each new or existing catalytic cracking unit . . .	If you use this type of control device for your vent . . .	You shall install, operate, and maintain a . . .
1. Subject to the NSPS for PM in 40 CFR 60.102.	a. Cyclone	Continuous opacity monitoring system to measure and record the opacity of emissions from each catalyst regenerator vent.
	b. Electrostatic precipitator	Continuous opacity monitoring system to measure and record the opacity of emissions from each catalyst regenerator vent; or continuous parameter monitoring systems to measure and record the coke burn-off rate or the gas flow rate entering or exiting the control device [1] and the total power and secondary current to the control device.
	c. Wet scrubber	Continuous parameter monitoring system to measure and record the pressure drop across the scrubber,[2] coke burn-off rate or the gas flow rate entering or exiting the control device,[1] and total liquid (or scrubbing liquor) flow rate to the control device. Alternatively, before [THE DATE 3 YEARS AFTER THE DATE OF PUBLICATION OF THE FINAL RULE AMENDMENTS IN THE **FEDERAL REGISTER**], continuous opacity monitoring system to measure and record the opacity of emissions from each catalyst regenerator vent.
	d. Fabric Filter	Continuous bag leak detection system to measure and record increases in relative particulate loading from each catalyst regenerator vent or a continuous opacity monitoring system to measure and record the opacity of emissions from each catalyst regenerator vent.
2. Subject to NSPS for PM in 40 CFR 60.102a(b)(1)(i) electing to meet the PM per coke burn-off limit.	a. Cyclone	Continuous opacity monitoring system to measure and record the opacity of emissions from each catalyst regenerator vent.
	b. Electrostatic precipitator	Continuous opacity monitoring system to measure and record the opacity of emissions from each catalyst regenerator vent; or continuous parameter monitoring systems to measure and record the coke burn-off rate or the gas flow rate entering or exiting the control device,[1] the voltage, current, and secondary current to the control device.
	c. Wet scrubber	Continuous parameter monitoring system to measure and record the pressure drop across the scrubber,[2] the coke burn-off rate or the gas flow rate entering or exiting the control device,[1] and total liquid (or scrubbing liquor) flow rate to the control device.
	d. Fabric Filter	Continuous bag leak detection system to measure and record increases in relative particulate loading from each catalyst regenerator vent.
3. Subject to NSPS for PM in 40 CFR 60.102a(b)(1)(i) electing to meet the PM concentration limit.	Any	Continuous emission monitoring system to measure and record the concentration of PM and oxygen from each catalyst regenerator vent.
4. Subject to NSPS for PM in 40 CFR 60.102a(b)(1)(ii) electing to meet the PM per coke burn-off limit.	Any	See item 2 of this table.
5. Subject to NSPS for PM in 40 CFR 60.102a(b)(1)(ii) electing to meet the PM concentration limit.	Any	See item 3 of this table.

TABLE 3 TO SUBPART UUU OF PART 63—CONTINUOUS MONITORING SYSTEMS FOR METAL HAP EMISSIONS FROM CATALYTIC CRACKING UNITS—Continued

For each new or existing catalytic cracking unit . . .	If you use this type of control device for your vent . . .	You shall install, operate, and maintain a . . .
6. Option 1: PM per coke burn-off limit not subject to the NSPS for PM in 40 CFR 60.102 or 40 CFR 60.120a(b)(1).	Any	See item 1 of this table.
7. Option 2: PM concentration limit not subject to the NSPS for PM in 40 CFR 60.102 or 40 CFR 60.120a(b)(1).	Any	See item 3 of this table.
8. Option 3: Ni lb/hr limit not subject to the NSPS for PM in 40 CFR 60.102 or in 40 CFR 60.102a(b)(1).	a. Cyclone	Continuous opacity monitoring system to measure and record the opacity of emissions from each catalyst regenerator vent and continuous parameter monitoring system to measure and record the coke burn-off rate or the gas flow rate entering or exiting the control device.[1]
	b. Electrostatic precipitator	Continuous opacity monitoring system to measure and record the opacity of emissions from each catalyst regenerator vent and continuous parameter monitoring system to measure and record the coke burn-off rate or the gas flow rate entering or exiting the control device;[1] or continuous parameter monitoring systems to measure and record the coke burn-off rate or the gas flow rate entering or exiting the control device[1] and the voltage and current [to measure the total power to the system] and secondary current to the control device.
	c. Wet scrubber	Continuous parameter monitoring system to measure and record the pressure drop across the scrubber,[2] gas flow rate entering or exiting the control device,[1] and total liquid (or scrubbing liquor) flow rate to the control device.
	d. Fabric Filter	Continuous bag leak detection system to measure and record increases in relative particulate loading from each catalyst regenerator vent or the monitoring systems specified in item 8.a of this table.
9. Option 4: Ni lb/1,000 lbs of coke burn-off limit not subject to the NSPS for PM in 40 CFR 60.102 or in 40 CFR 60.102a(b)(1).	a. Cyclone	Continuous opacity monitoring system to measure and record the opacity of emissions from each catalyst regenerator vent and continuous parameter monitoring system to measure and record the gas flow rate entering or exiting the control device.[1]
	b. Electrostatic precipitator	Continuous opacity monitoring system to measure and record the opacity of emissions from each catalyst regenerator vent and continuous parameter monitoring system to measure and record the coke burn-off rate or the gas flow rate entering or exiting the control device;[1] or continuous parameter monitoring systems to measure and record the coke burn-off rate or the gas flow rate entering or exiting the control device[1] and voltage and current [to measure the total power to the system] and secondary current to the control device.
	c. Wet scrubber	Continuous parameter monitoring system to measure and record the pressure drop across the scrubber,[2] gas flow rate entering or exiting the control device,[1] and total liquid (or scrubbing liquor) flow rate to the control device.
	d. Fabric Filter	Continuous bag leak detection system to measure and record increases in relative particulate loading from each catalyst regenerator vent or the monitoring systems specified in item 9.a of this table.

[1] If applicable, you can use the alternative in § 63.1573(a)(1) instead of a continuous parameter monitoring system for gas flow rate.

[2] If you use a jet ejector type wet scrubber or other type of wet scrubber equipped with atomizing spray nozzles, you can use the alternative in § 63.1573(b) instead of a continuous parameter monitoring system for pressure drop across the scrubber.

■ 55. Table 4 to subpart UUU of part 63 is revised to read as follows:

As stated in § 63.1564(b)(2), you shall meet each requirement in the following table that applies to you.

TABLE 4 TO SUBPART UUU OF PART 63—REQUIREMENTS FOR PERFORMANCE TESTS FOR METAL HAP EMISSIONS FROM CATALYTIC CRACKING UNITS NOT SUBJECT TO THE NEW SOURCE PERFORMANCE STANDARD (NSPS) FOR PARTICULATE MATTER (PM)

For each new or existing catalytic cracking unit catalyst regenerator vent . . .	You must . . .	Using . . .	According to these requirements . . .
1. Any	a. Select sampling port's location and the number of traverse ports.	Method 1 or 1A in Appendix A–1 to part 60 of this chapter.	Sampling sites must be located at the outlet of the control device or the outlet of the regenerator, as applicable, and prior to any releases to the atmosphere.
	b. Determine velocity and volumetric flow rate.	Method 2, 2A, 2C, 2D, 2F in Appendix A–1 to part 60 of this chapter, or 2G in Appendix A–2 to part 60 of this chapter, as applicable.	
	c. Conduct gas molecular weight analysis.	Method 3, 3A, or 3B in Appendix A–2 to part 60 of this chapter, as applicable.	
	d. Measure moisture content of the stack gas.	Method 4 in Appendix A–3 to part 60 of this chapter.	
	e. If you use an electrostatic precipitator, record the total number of fields in the control system and how many operated during the applicable performance test.		
	f. If you use a wet scrubber, record the total amount (rate) of water (or scrubbing liquid) and the amount (rate) of make-up liquid to the scrubber during each test run.		
2. Option 1: PM per coke burn-off limit, not subject to the NSPS for PM in 40 CFR 60.102 or in 40 CFR 60.102a(b)(1).	a. Measure PM emissions	Method 5, 5B, or 5F (40 CFR part 60, Appendix A–3) to determine PM emissions and associated moisture content for units without wet scrubbers. Method 5 or 5B (40 CFR part 60, Appendix A–3) to determine PM emissions and associated moisture content for unit with wet scrubber.	You must maintain a sampling rate of at least 0.15 dry standard cubic meters per minute (dscm/min) (0.53 dry standard cubic feet per minute (dscf/min).
	b. Compute coke burn-off rate and PM emission rate (lb/1,000 lb of coke burn-off).	Equations 1, 2, and 3 of § 63.1564 (if applicable).	
	c. Measure opacity of emissions	Continuous opacity monitoring system.	You must collect opacity monitoring data every 10 seconds during the entire period of the Method 5, 5B, or 5F performance test and reduce the data to 6-minute averages.
3. Option 2: PM concentration limit, not subject to the NSPS for PM in 40 CFR 60.102 or in 40 CFR 60.102a(b)(1).	a. Measure PM concentration	Method 5, 5B, or 5F (40 CFR part 60, Appendix A–3) to determine PM concentration and associated moisture content for units without wet scrubbers Method 5 or 5B (40 CFR part 60, Appendix A–3) to determine PM concentration and associated moisture content for unit with wet scrubber.	You must maintain a sampling rate of at least 0.15 dry standard cubic meters per minute (dscm/min) (0.53 dry standard cubic feet per minute (dscf/min).

TABLE 4 TO SUBPART UUU OF PART 63—REQUIREMENTS FOR PERFORMANCE TESTS FOR METAL HAP EMISSIONS FROM CATALYTIC CRACKING UNITS NOT SUBJECT TO THE NEW SOURCE PERFORMANCE STANDARD (NSPS) FOR PARTICULATE MATTER (PM)—Continued

For each new or existing catalytic cracking unit catalyst regenerator vent . . .	You must . . .	Using . . .	According to these requirements . . .
4. Option 3: Ni lb/hr limit, not subject to the NSPS for PM in 40 CFR 60.102 or in 40 CFR 60.102a(b)(1).	a. Measure concentration of Ni	Method 29 (40 CFR part 60, Appendix A–8).	
	b. Compute Ni emission rate (lb/hr).	Equation 5 of § 63.1564.	
	c. Determine the equilibrium catalyst Ni concentration.	XRF procedure in Appendix A to this subpart; [1] or EPA Method 6010B or 6020 or EPA Method 7520 or 7521 in SW–846; [2] or an alternative to the SW–846 method satisfactory to the Administrator.	You must obtain 1 sample for each of the 3 runs; determine and record the equilibrium catalyst Ni concentration for each of the 3 samples; and you may adjust the laboratory results to the maximum value using Equation 2 of § 63.1571.
	d. If you use a continuous opacity monitoring system, establish your site-specific Ni operating limit.	i. Equations 6 and 7 of § 63.1564 using data from continuous opacity monitoring system, gas flow rate, results of equilibrium catalyst Ni concentration analysis, and Ni emission rate from Method 29 test.	(1) You must collect opacity monitoring data every 10 seconds during the entire period of the initial Ni performance test; reduce the data to 6-minute averages; and determine and record the hourly average opacity from all the 6-minute averages. (2) You must collect gas flow rate monitoring data every 15 minutes during the entire period of the initial Ni performance test; measure the gas flow as near as practical to the continuous opacity monitoring system; and determine and record the hourly average actual gas flow rate from all the readings.
5. Option 4: Ni per coke burn-off limit, not subject to the NSPS for PM in 40 CFR 60.102 or in 40 CFR 60.102a(b)(1).	a. Measure concentration of Ni	Method 29 (40 CFR part 60, Appendix A–8).	
	b. Compute Ni emission rate (lb/1,000 lb of coke burn-off).	Equations 1 and 8 of § 63.1564.	
	c. Determine the equilibrium catalyst Ni concentration.	See item 4.c. of this table	You must obtain 1 sample for each of the 3 runs; determine and record the equilibrium catalyst Ni concentration for each of the 3 samples; and you may adjust the laboratory results to the maximum value using Equation 2 of § 63.1571.
	d. If you use a continuous opacity monitoring system, establish your site-specific Ni operating limit.	i. Equations 9 and 10 of § 63.1564 with data from continuous opacity monitoring system, coke burn-off rate, results of equilibrium catalyst Ni concentration analysis, and Ni emission rate from Method 29 test.	(1) You must collect opacity monitoring data every 10 seconds during the entire period of the initial Ni performance test; reduce the data to 6-minute averages; and determine and record the hourly average opacity from all the 6-minute averages. (2) You must collect gas flow rate monitoring data every 15 minutes during the entire period of the initial Ni performance test; measure the gas flow rate as near as practical to the continuous opacity monitoring system; and determine and record the hourly average actual gas flow rate from all the readings.

TABLE 4 TO SUBPART UUU OF PART 63—REQUIREMENTS FOR PERFORMANCE TESTS FOR METAL HAP EMISSIONS FROM CATALYTIC CRACKING UNITS NOT SUBJECT TO THE NEW SOURCE PERFORMANCE STANDARD (NSPS) FOR PARTICULATE MATTER (PM)—Continued

For each new or existing catalytic cracking unit catalyst regenerator vent . . .	You must . . .	Using . . .	According to these requirements . . .
	e. Record the catalyst addition rate for each test and schedule for the 10-day period prior to the test.		
6. If you elect Option 1 in item 4 in Table 1, Option 3 in item 6 in Table 1, or Option 4 in item 7 in Table 1 of this subpart and you use continuous parameter monitoring systems.	a. Establish each operating limit in Table 2 of this subpart that applies to you.	Data from the continuous parameter monitoring systems and applicable performance test methods.	
	b. Electrostatic precipitator or wet scrubber: gas flow rate.	i. Data from the continuous parameter monitoring systems and applicable performance test methods.	(1) You must collect gas flow rate monitoring data every 15 minutes during the entire period of the initial performance test. (2) You must determine and record the 3-hr average gas flow rate from all the readings. Alternatively, before [THE DATE 18 MONTHS AFTER THE DATE OF PUBLICATION OF THE FINAL RULE AMENDMENTS IN THE **FEDERAL REGISTER**], you may determine and record the maximum hourly average gas flow rate from all the readings.
	c. Electrostatic precipitator: voltage and secondary current (or total power input).	i. Data from the continuous parameter monitoring systems and applicable performance test methods.	(1) You must collect voltage, current, and secondary current monitoring data every 15 minutes during the entire period of the performance test. Alternatively, before [THE DATE 18 MONTHS AFTER THE DATE OF PUBLICATION OF THE FINAL RULE AMENDMENTS IN THE **FEDERAL REGISTER**], you may collect voltage and secondary current (or total power input) monitoring data every 15 minutes during the entire period of the initial performance test. (2) You must determine and record the 3-hr average total power to the system and the 3-hr average secondary current. Alternatively, before [THE DATE 18 MONTHS AFTER THE DATE OF PUBLICATION OF THE FINAL RULE AMENDMENTS IN THE **FEDERAL REGISTER**], you may determine and record the minimum hourly average voltage and secondary current (or total power input) from all the readings.
	d. Electrostatic precipitator or wet scrubber: equilibrium catalyst Ni concentration.	Results of analysis for equilibrium catalyst Ni concentration.	You must determine and record the average equilibrium catalyst Ni concentration for the 3 runs based on the laboratory results. You may adjust the value using Equation 1 or 2 of § 63.1571 as applicable.

TABLE 4 TO SUBPART UUU OF PART 63—REQUIREMENTS FOR PERFORMANCE TESTS FOR METAL HAP EMISSIONS FROM CATALYTIC CRACKING UNITS NOT SUBJECT TO THE NEW SOURCE PERFORMANCE STANDARD (NSPS) FOR PARTICULATE MATTER (PM)—Continued

For each new or existing catalytic cracking unit catalyst regenerator vent . . .	You must . . .	Using . . .	According to these requirements . . .
	e. Wet scrubber: pressure drop (not applicable to non-venturi scrubber of jet ejector design).	i. Data from the continuous parameter monitoring systems and applicable performance test methods.	(1) You must collect pressure drop monitoring data every 15 minutes during the entire period of the initial performance test. (2) You must determine and record the 3-hr average pressure drop from all the readings. Alternatively, before [THE DATE 18 MONTHS AFTER THE DATE OF PUBLICATION OF THE FINAL RULE AMENDMENTS IN THE **FEDERAL REGISTER**], you may determine and record the minimum hourly average pressure drop from all the readings.
	f. Wet scrubber: liquid-to-gas ratio	i. Data from the continuous parameter monitoring systems and applicable performance test methods.	(1) You must collect gas flow rate and total water (or scrubbing liquid) flow rate monitoring data every 15 minutes during the entire period of the initial performance test. (2) You must determine and record the hourly average liquid-to-gas ratio from all the readings. Alternatively, before [THE DATE 18 MONTHS AFTER THE DATE OF PUBLICATION OF THE FINAL RULE AMENDMENTS IN THE **FEDERAL REGISTER**], you may determine and record the hourly average gas flow rate and total water (or scrubbing liquid) flow rate from all the readings. (3) You must determine and record the 3-hr average liquid-to-gas ratio. Alternatively, before [THE DATE 18 MONTHS AFTER THE DATE OF PUBLICATION OF THE FINAL RULE AMENDMENTS IN THE **FEDERAL REGISTER**], you may determine and record the minimum liquid-to-gas ratio.
	g. Alternative procedure for gas flow rate.	i. Data from the continuous parameter monitoring systems and applicable performance test methods.	(1) You must collect air flow rate monitoring data or determine the air flow rate using control room instrumentation every 15 minutes during the entire period of the initial performance test. (2) You must determine and record the 3-hr average rate of all the readings. Alternatively, before [THE DATE 18 MONTHS AFTER THE DATE OF PUBLICATION OF THE FINAL RULE AMENDMENTS IN THE **FEDERAL REGISTER**], you may determine and record the hourly average rate of all the readings.

TABLE 4 TO SUBPART UUU OF PART 63—REQUIREMENTS FOR PERFORMANCE TESTS FOR METAL HAP EMISSIONS FROM CATALYTIC CRACKING UNITS NOT SUBJECT TO THE NEW SOURCE PERFORMANCE STANDARD (NSPS) FOR PARTICULATE MATTER (PM)—Continued

For each new or existing catalytic cracking unit catalyst regenerator vent . . .	You must . . .	Using . . .	According to these requirements . . .
			(3) You must determine and record the maximum gas flow rate using Equation 1 of § 63.1573.

[1] Determination of Metal Concentration on Catalyst Particles (Instrumental Analyzer Procedure).

[2] EPA Method 6010B, Inductively Coupled Plasma-Atomic Emission Spectrometry, EPA Method 6020, Inductively Coupled Plasma-Mass Spectrometry, EPA Method 7520, Nickel Atomic Absorption, Direct Aspiration, and EPA Method 7521, Nickel Atomic Absorption, Direct Aspiration are included in ''Test Methods for Evaluating Solid Waste, Physical/Chemical Methods,'' EPA Publication SW–846, Revision 5 (April 1998). The SW–846 and Updates (document number 955–001–00000–1) are available for purchase from the Superintendent of Documents, U.S. Government Printing Office, Washington, DC 20402, (202) 512–1800; and from the National Technical Information Services (NTIS), 5285 Port Royal Road, Springfield, VA 22161, (703) 487–4650. Copies may be inspected at the EPA Docket Center, William Jefferson Clinton (WJC) West Building (Air Docket), Room 3334, 1301 Constitution Ave. NW., Washington, DC; or at the Office of the Federal Register, 800 North Capitol Street NW., Suite 700, Washington, DC.

■ 56. Table 5 to subpart UUU of part 63 is revised to read as follows:

As stated in § 63.1564(b)(5), you shall meet each requirement in the following table that applies to you.

TABLE 5 TO SUBPART UUU OF PART 63—INITIAL COMPLIANCE WITH METAL HAP EMISSION LIMITS FOR CATALYTIC CRACKING UNITS

For each new and existing catalytic cracking unit catalyst regenerator vent . . .	For the following emission limit . . .	You have demonstrated initial compliance if . . .
1. Subject to the NSPS for PM in 40 CFR 60.102.	PM emissions must not exceed 1.0 gram per kilogram (g/kg) (1.0 lb/1,000 lb) of coke burn-off. Before [THE DATE 18 MONTHS AFTER THE DATE OF PUBLICATION OF THE FINAL RULE AMENDMENTS IN THE **FEDERAL REGISTER**], if the discharged gases pass through an incinerator or waste heat boiler in which you burn auxiliary or supplemental liquid or solid fossil fuel, the incremental rate of PM must not exceed 43.0 grams per Gigajoule (g/GJ) or 0.10 pounds per million British thermal units (lb/million Btu) of heat input attributable to the liquid or solid fossil fuel; and the opacity of emissions must not exceed 30 percent, except for one 6-minute average opacity reading in any 1-hour period.	You have already conducted a performance test to demonstrate initial compliance with the NSPS and the measured PM emission rate is less than or equal to 1.0 g/kg (1.0 lb/1,000 lb) of coke burn-off in the catalyst regenerator. As part of the Notification of Compliance Status, you must certify that your vent meets the PM limit. You are not required to do another performance test to demonstrate initial compliance. As part of your Notification of Compliance Status, you certify that your BLD; CO_2, O_2, or CO monitor; or continuous opacity monitoring system meets the requirements in § 63.1572.
2. Subject to NSPS for PM in 40 CFR 60.102a(b)(1)(i), electing to meet the PM per coke burn-off limit.	PM emissions must not exceed 0.5 g/kg (0.5 lb PM/1,000 lb) of coke burn-off or,	You have already conducted a performance test to demonstrate initial compliance with the NSPS and the measured PM emission rate is less than or equal to 1.0 g/kg (1.0 lb/1,000 lb) of coke burn-off in the catalyst regenerator. As part of the Notification of Compliance Status, you must certify that your vent meets the PM limit. You are not required to do another performance test to demonstrate initial compliance. As part of your Notification of Compliance Status, you certify that your BLD; CO_2, O_2, or CO monitor; or continuous opacity monitoring system meets the requirements in § 63.1572.

TABLE 5 TO SUBPART UUU OF PART 63—INITIAL COMPLIANCE WITH METAL HAP EMISSION LIMITS FOR CATALYTIC CRACKING UNITS—Continued

For each new and existing catalytic cracking unit catalyst regenerator vent . . .	For the following emission limit . . .	You have demonstrated initial compliance if . . .
3. Subject to NSPS for PM in 40 CFR 60.102a(b)(1)(ii), electing to meet the PM per coke burn-off limit.	PM emissions must not exceed 1.0 g/kg coke burn-off (1 lb/1000 lb coke burn-off).	You have already conducted a performance test to demonstrate initial compliance with the NSPS and the measured PM emission rate is less than or equal to 0.5 kg/1,000 kg (0.5 lb/1,000 lb) of coke burn-off in the catalyst regenerator. As part of the Notification of Compliance Status, you must certify that your vent meets the PM limit. You are not required to do another performance test to demonstrate initial compliance. As part of your Notification of Compliance Status, you certify that your BLD; CO_2, O_2, or CO monitor; or continuous opacity monitoring system meets the requirements in § 63.1572.
4. Subject to NSPS for PM in 40 CFR 60.102a(b)(1)(i), electing to meet the PM concentration limit.	If a PM CEMS is used, 0.020 grain per dry standard cubic feet (gr/dscf) corrected to 0 percent excess air.	You have already conducted a performance test to demonstrate initial compliance with the NSPS and the measured PM concentration is less than or equal to 0.020 grain per dry standard cubic feet (gr/dscf) corrected to 0 percent excess air. As part of the Notification of Compliance Status, you must certify that your vent meets the PM limit. You are not required to do another performance test to demonstrate initial compliance. As part of your Notification of Compliance Status, you certify that your PM CEMS meets the requirements in § 63.1572.
5. Subject to NSPS for PM in 40 CFR 60.102a(b)(1)(ii), electing to meet the PM concentration limit.	If a PM CEMS is used, 0.040 gr/dscf corrected to 0 percent excess air.	You have already conducted a performance test to demonstrate initial compliance with the NSPS and the measured PM concentration is less than or equal to 0.040 gr/dscf corrected to 0 percent excess air. As part of the Notification of Compliance Status, you must certify that your vent meets the PM limit. You are not required to do another performance test to demonstrate initial compliance. As part of your Notification of Compliance Status, you certify that your PM CEMS meets the requirements in § 63.1572.
6. Option 1: PM per coke burn-off limit not subject to the NSPS for PM in 40 CFR 60.102 or 40 CFR 60.120a(b)(1).	PM emissions must not exceed 1.0 gram per kilogram (g/kg) (1.0 lb/1,000 lb) of coke burn-off. Before [THE DATE 3 YEARS AFTER THE DATE OF PUBLICATION OF THE FINAL RULE AMENDMENTS IN THE **FEDERAL REGISTER**], PM emission must not exceed 1.0 g/kg (1.0 lb/1,000 lb) of coke burn-off in the catalyst regenerator; if the discharged gases pass through an incinerator or waste heat boiler in which you burn auxiliary or supplemental liquid or solid fossil fuel, the incremental rate of PM must not exceed 43.0 g/GJ (0.10 lb/million Btu) of heat input attributable to the liquid or solid fossil fuel; and the opacity of emissions must not exceed 30 percent, except for one 6-minute average opacity reading in any 1-hour period.	The average PM emission rate, measured using EPA Method 5, 5B, or 5F (for a unit without a wet scrubber) or 5 or 5B (for a unit with a wet scrubber), over the period of the initial performance test, is no higher than 1.0 g/kg coke burn-off (1.0 lb/1,000 lb) in the catalyst regenerator. The PM emission rate is calculated using Equations 1, 2, and 3 of § 63.1564. If you use a BLD; CO_2, O_2, CO monitor; or continuous opacity monitoring system, your performance evaluation shows the system meets the applicable requirements in § 63.1572.
7. Option 2: PM concentration limit, not subject to the NSPS for PM in 40 CFR 60.102 or in 40 CFR 60.102a(b)(1).	PM emissions must not exceed 0.040 gr/dscf corrected to 0 percent excess air.	The average PM concentration, measured using EPA Method 5, 5B, or 5F (for a unit without a wet scrubber) or Method 5 or 5B (for a unit with a wet scrubber), over the period of the initial performance test, is less than or equal to 0.040 gr/dscf corrected to 0 percent excess air. Your performance evaluation shows your PM CEMS meets the applicable requirements in § 63.1572.

TABLE 5 TO SUBPART UUU OF PART 63—INITIAL COMPLIANCE WITH METAL HAP EMISSION LIMITS FOR CATALYTIC CRACKING UNITS—Continued

For each new and existing catalytic cracking unit catalyst regenerator vent . . .	For the following emission limit . . .	You have demonstrated initial compliance if . . .
8. Option 3: not subject to the NSPS for PM.	Nickel (Ni) emissions from your catalyst regenerator vent must not exceed 13,000 mg/hr (0.029 lb/hr).	The average Ni emission rate, measured using Method 29 over the period of the initial performance test, is not more than 13,000 mg/hr (0.029 lb/hr). The Ni emission rate is calculated using Equation 5 of § 63.1564; and if you use a BLD; CO_2, O_2, or CO monitor; or continuous opacity monitoring system, your performance evaluation shows the system meets the applicable requirements in § 63.1572.
9. Option 4: Ni per coke burn-off limit not subject to the NSPS for PM.	Ni emissions from your catalyst regenerator vent must not exceed 1.0 mg/kg (0.001 lb/1,000 lb) of coke burn-off in the catalyst regenerator.	The average Ni emission rate, measured using Method 29 over the period of the initial performance test, is not more than 1.0 mg/kg (0.001 lb/1,000 lb) of coke burn-off in the catalyst regenerator. The Ni emission rate is calculated using Equation 8 of § 63.1564; and if you use a BLD; CO_2, O_2, or CO monitor; or continuous opacity monitoring system, your performance evaluation shows the system meets the applicable requirements in § 63.1572.

■ 57. Table 6 to subpart UUU of part 63 is revised to read as follows:

As stated in § 63.1564(c)(1), you shall meet each requirement in the following table that applies to you.

TABLE 6 TO SUBPART UUU OF PART 63—CONTINUOUS COMPLIANCE WITH METAL HAP EMISSION LIMITS FOR CATALYTIC CRACKING UNITS

For each new and existing catalytic cracking unit . . .	Subject to this emission limit for your catalyst regenerator vent . . .	You shall demonstrate continuous compliance by . . .
1. Subject to the NSPS for PM in 40 CFR 60.102.	a. PM emissions must not exceed 1.0 gram per kilogram (g/kg) (1.0 lb/1,000 lb) of coke burn-off. Before [THE DATE 18 MONTHS AFTER THE DATE OF PUBLICATION OF THE FINAL RULE AMENDMENTS IN THE **FEDERAL REGISTER**], if the discharged gases pass through an incinerator or waste heat boiler in which you burn auxiliary or supplemental liquid or solid fossil fuel, the incremental rate of PM must not exceed 43.0 g/GJ (0.10 lb/million Btu) of heat input attributable to the liquid or solid fossil fuel; and the opacity of emissions must not exceed 30 percent, except for one 6-minute average opacity reading in any 1-hour period.	i. Determining and recording each day the average coke burn-off rate (thousands of kilograms per hour) using Equation 1 in § 63.1564 and the hours of operation for each catalyst regenerator. ii. Maintaining PM emission rate below 1.0 g/kg (1.0 lb/1,000 lb) of coke burn-off. iii. Conducting a performance test before [THE DATE 18 MONTHS AFTER THE DATE OF PUBLICATION OF THE FINAL RULE AMENDMENTS IN THE **FEDERAL REGISTER**] and once every five years thereafter. iv. Collecting the applicable continuous parametric monitoring system data according to § 63.1572 and maintaining each rolling 3-hr average above or below (as applicable) the average determined during the performance test.

TABLE 6 TO SUBPART UUU OF PART 63—CONTINUOUS COMPLIANCE WITH METAL HAP EMISSION LIMITS FOR CATALYTIC CRACKING UNITS—Continued

For each new and existing catalytic cracking unit . . .	Subject to this emission limit for your catalyst regenerator vent . . .	You shall demonstrate continuous compliance by . . .
		v. Collecting the continuous opacity monitoring data for each catalyst regenerator vent according to § 63.1572 and maintaining each 6-minute average at or below the site-specific opacity determined during the performance test. Alternatively, before [THE DATE 18 MONTHS AFTER THE DATE OF PUBLICATION OF THE FINAL RULE AMENDMENTS IN THE **FEDERAL REGISTER**], collecting the continuous opacity monitoring data for each catalyst regenerator vent according to § 63.1572 and maintaining each 6-minute average at or below 30 percent, except that one 6-minute average during a 1-hour period can exceed 30 percent. vi. Before [THE DATE 18 MONTHS AFTER THE DATE OF PUBLICATION OF THE FINAL RULE AMENDMENTS IN THE **FEDERAL REGISTER**], if applicable, determining and recording each day the rate of combustion of liquid or solid fossil fuels (liters/hour or kilograms/hour) and the hours of operation during which liquid or solid fossil-fuels are combusted in the incinerator-waste heat boiler; if applicable, maintaining the incremental rate of PM at or below 43 g/GJ (0.10 lb/million Btu) of heat input attributable to the solid or liquid fossil fuel.
2. Subject to NSPS for PM in 40 CFR 60.102a(b)(1)(i), electing to meet the PM per coke burn-off limit..	PM emissions must not exceed 0.5 g/kg (0.5 lb PM/1,000 lb) of coke burn-off.	Determining and recording each day the average coke burn-off rate (thousands of kilograms per hour) using Equation 1 in § 63.1564 and the hours of operation for each catalyst regenerator; maintaining PM emission rate below 0.5 g/kg (0.5 lb PM/1,000 lb) of coke burn-off; conducting a performance test once every year; collecting the applicable continuous parametric monitoring system data according to § 63.1572 and maintaining each rolling 3-hr average above or below (as applicable) the average determined during the performance test; collecting the continuous opacity monitoring data for each regenerator vent according to § 63.1572 and maintaining each 6-minute average at or below the site-specific opacity determined during the performance test.
3. Subject to NSPS for PM in 40 CFR 60.102a(b)(1)(ii), electing to meet the PM per coke burn-off limit.	PM emissions must not exceed 1.0 g/kg coke burn-off (1 lb/1,000 lb coke burn-off).	Determining and recording each day the average coke burn-off rate (thousands of kilograms per hour) using Equation 1 in § 63.1564 and the hours of operation for each catalyst regenerator; maintaining PM emission rate below 1.0 g/kg (1.0 lb/1,000 lb) of coke burn-off; conducting a performance test once every year; collecting the applicable continuous parametric monitoring system data according to § 63.1572 and maintaining each rolling 3-hr average above or below (as applicable) the average determined during the performance test; collecting the continuous opacity monitoring data for each regenerator vent according to § 63.1572 and maintaining each 6-minute average at or below the site-specific opacity determined during the performance test.
4. Subject to NSPS for PM in 40 CFR 60.102a(b)(1)(i), electing to meet the PM concentration limit.	If a PM CEMS is used, 0.020 grain per dry standard cubic feet (gr/dscf) corrected to 0 percent excess air.	Maintaining PM concentration below 0.020 gr/dscf corrected to 0 percent excess air.
5. Subject to NSPS for PM in 40 CFR 60.102a(b)(1)(ii), electing to meet the PM concentration limit.	If a PM CEMS is used, 0.040 gr/dscf corrected to 0 percent excess air.	Maintaining PM concentration below 0.040 gr/dscf corrected to 0 percent excess air.

TABLE 6 TO SUBPART UUU OF PART 63—CONTINUOUS COMPLIANCE WITH METAL HAP EMISSION LIMITS FOR CATALYTIC CRACKING UNITS—Continued

For each new and existing catalytic cracking unit . . .	Subject to this emission limit for your catalyst regenerator vent . . .	You shall demonstrate continuous compliance by . . .
6. Option 1: PM per coke burn-off limit, not subject to the NSPS for PM in 40 CFR 60.102 or in 40 CFR 60.102a(b)(1).	See item 1 of this table	See item 1 of this table.
7. Option 2: PM concentration limit, not subject to the NSPS for PM in 40 CFR 60.102 or in 40 CFR 60.102a(b)(1).	PM emissions must not exceed 0.040 gr/dscf corrected to 0 percent excess air.	See item 5 of this table.
8. Option 3: Ni lb/hr limit, not subject to the NSPS for PM in 40 CFR 60.102 or in 40 CFR 60.102a(b)(1).	Ni emissions must not exceed 13,000 mg/hr (0.029 lb/hr).	Maintaining Ni emission rate below 13,000 mg/hr (0.029 lb/hr); conducting a performance test before [THE DATE 18 MONTHS AFTER THE DATE OF PUBLICATION OF THE FINAL RULE AMENDMENTS IN THE **FEDERAL REGISTER**] and once every five years thereafter; and collecting the applicable continuous parametric monitoring system data according to § 63.1572 and maintaining each rolling 3-hr average above or below (as applicable) the average determined during the performance test.
9. Option 4: Ni per coke burn-off limit, not subject to the NSPS for PM in 40 CFR 60.102 or in 40 CFR 60.102a(b)(1).	Ni emissions must not exceed 1.0 mg/kg (0.001 lb/1,000 lb) of coke burn-off in the catalyst regenerator.	Determining and recording each day the average coke burn-off rate (thousands of kilograms per hour) and the hours of operation for each catalyst regenerator by Equation 1 of § 63.1564 (you can use process data to determine the volumetric flow rate); and maintaining Ni emission rate below 1.0 mg/kg (0.001 lb/1,000 lb) of coke burn-off in the catalyst regenerator; conducting a performance test before [THE DATE 18 MONTHS AFTER THE DATE OF PUBLICATION OF THE FINAL RULE AMENDMENTS IN THE **FEDERAL REGISTER**] and once every five years thereafter; and collecting the applicable continuous parametric monitoring system data according to § 63.1572 and maintaining each rolling 3-hr average above or below (as applicable) the average determined during the performance test.

■ 58. Table 7 to subpart UUU of part 63 is revised to read as follows:

As stated in § 63.1564(c)(1), you shall meet each requirement in the following table that applies to you.

TABLE 7 TO SUBPART UUU OF PART 63—CONTINUOUS COMPLIANCE WITH OPERATING LIMITS FOR METAL HAP EMISSIONS FROM CATALYTIC CRACKING UNITS

For each new or existing catalytic cracking unit . . .	If you use . . .	For this operating limit . . .	You shall demonstrate continuous compliance by . . .
1. Subject to NSPS for PM in 40 CFR 60.102.	a. Continuous opacity monitoring system used to comply with 30 percent opacity limit..	Not applicable	Complying with Table 6 of this subpart.
	b. Continuous parametric monitoring systems—electrostatic precipitator.	The average gas flow rate entering or exiting the control device must not exceed the operating limit established during the performance test..	Collecting the hourly and 3-hr rolling average gas flow rate monitoring data according to § 63.1572; and maintaining the 3-hr rolling average gas flow rate at or below the limit established during the performance test.
		The average total power and secondary current to the control device must not fall below the operating limit established during the performance test.	Collecting the hourly and 3-hr rolling average total power and secondary current monitoring data according to § 63.1572; and maintaining the 3-hr rolling average total power and secondary current at or above the limit established during the performance test.

TABLE 7 TO SUBPART UUU OF PART 63—CONTINUOUS COMPLIANCE WITH OPERATING LIMITS FOR METAL HAP EMISSIONS FROM CATALYTIC CRACKING UNITS—Continued

For each new or existing catalytic cracking unit . . .	If you use . . .	For this operating limit . . .	You shall demonstrate continuous compliance by . . .
	c. Continuous parametric monitoring systems—wet scrubber.	The average pressure drop across the scrubber must not fall below the operating limit established during the performance test.	Collecting the hourly and 3-hr rolling average pressure drop monitoring data according to § 63.1572; and maintaining the 3-hr rolling average pressure drop at or above the limit established during the performance test.
		The average liquid-to-gas ratio must not fall below the operating limit established during the performance test.	Collecting the hourly and 3-hr rolling average gas flow rate and scrubber liquid flow rate monitoring data according to § 63.1572; determining and recording the 3-hr liquid-to-gas ratio; and maintaining the 3-hr rolling average liquid-to-gas ratio at or above the limit established during the performance test.
	d. BLD—fabric filter	Increases in relative particulate	Collecting and maintaining records of BLD system output; determining the cause of the alarm within 1 hour of the alarm; and alleviating the cause of the alarm within 3 hours by corrective action.
	e. Continuous opacity monitoring system, used for site-specific opacity limit—Cyclone or electrostatic precipitator.	The average opacity must not exceed the opacity established during the performance test.	Collecting the hourly and 3-hr rolling average opacity monitoring data according to § 63.1572; maintaining the 3-hr rolling average opacity at or above the limit established during the performance test.
2. Subject to NSPS for PM in 40 CFR 60.102a(b)(1)(ii), electing to meet the PM per coke burn-off limit.	Any	Any	See items 1.b, 1.c, 1.d, and 1.e of this table.
3. Subject to NSPS for PM in 40 CFR 60.102a(b)(1), electing to meet the PM concentration limit.	PM CEMS	Not applicable.	Complying with Table 6 of this subpart.
4. Option 1: PM per coke burn-off limit, not subject to the NSPS for PM in 40 CFR 60.102 or in 40 CFR 60.102a(b)(1).	a. Continuous opacity monitoring system.	The opacity of emissions from your catalyst regenerator vent must not exceed the site-specific opacity operating limit established during the performance test.	Collecting the 3-hr rolling average continuous opacity monitoring system data according to § 63.1572; and maintaining the 3-hr rolling average opacity at or below the site-specific limit. Alternatively, before [THE DATE 18 MONTHS AFTER THE DATE OF PUBLICATION OF THE FINAL RULE AMENDMENTS IN THE **FEDERAL REGISTER**], collecting the hourly average continuous opacity monitoring system data according to § 63.1572; and maintaining the hourly average opacity at or below the site-specific limit.

TABLE 7 TO SUBPART UUU OF PART 63—CONTINUOUS COMPLIANCE WITH OPERATING LIMITS FOR METAL HAP EMISSIONS FROM CATALYTIC CRACKING UNITS—Continued

For each new or existing catalytic cracking unit . . .	If you use . . .	For this operating limit . . .	You shall demonstrate continuous compliance by . . .
	b. Continuous parameter monitoring systems—electrostatic precipitator.	i. The average gas flow rate entering or exiting the control device must not exceed the operating limit established during the performance test.	Collecting the hourly and 3-hr rolling average gas flow rate monitoring data according to § 63.1572; and maintaining the 3-hr rolling average gas flow rate at or below the limit established during the performance test. Alternatively, before [THE DATE 18 MONTHS AFTER THE DATE OF PUBLICATION OF THE FINAL RULE AMENDMENTS IN THE **FEDERAL REGISTER**], collecting the hourly and daily average gas flow rate monitoring data according to § 63.1572;[1] and maintaining the daily average gas flow rate at or below the limit established during the performance test.
		ii. The average voltage and secondary current (or total power input) to the control device must not fall below the operating limit established during the performance test..	Collecting the hourly and 3-hr rolling average total power and secondary current monitoring data according to § 63.1572; and maintaining the 3-hr rolling average total power and secondary current at or above the limit established during the performance test. Alternatively, before [THE DATE 18 MONTHS AFTER THE DATE OF PUBLICATION OF THE FINAL RULE AMENDMENTS IN THE **FEDERAL REGISTER**], collecting the hourly and daily average voltage and secondary current (or total power input) monitoring data according to § 63.1572; and maintaining the daily average voltage and secondary current (or total power input) at or above the limit established during the performance test.
	c. Continuous parameter monitoring systems—wet scrubber.	i. The average pressure drop across the scrubber must not fall below the operating limit established during the performance test.	Collecting the hourly and 3-hr rolling average pressure drop monitoring data according to § 63.1572; and maintaining the 3-hr rolling average pressure drop at or above the limit established during the performance test. Alternatively, before [THE DATE 18 MONTHS AFTER THE DATE OF PUBLICATION OF THE FINAL RULE AMENDMENTS IN THE **FEDERAL REGISTER**], collecting the hourly and daily average pressure drop monitoring data according to § 63.1572; and maintaining the daily average pressure drop above the limit established during the performance test.

TABLE 7 TO SUBPART UUU OF PART 63—CONTINUOUS COMPLIANCE WITH OPERATING LIMITS FOR METAL HAP EMISSIONS FROM CATALYTIC CRACKING UNITS—Continued

For each new or existing catalytic cracking unit . . .	If you use . . .	For this operating limit . . .	You shall demonstrate continuous compliance by . . .
		ii. The average liquid-to-gas ratio must not fall below the operating limit established during the performance test.	Collecting the hourly and 3-hr rolling average gas flow rate and scrubber liquid flow rate monitoring data according to § 63.1572; determining and recording the 3-hr liquid-to-gas ratio; and maintaining the 3-hr rolling average liquid-to-gas ratio at or above the limit established during the performance test. Alternatively, before [THE DATE 18 MONTHS AFTER THE DATE OF PUBLICATION OF THE FINAL RULE AMENDMENTS IN THE **FEDERAL REGISTER**], collecting the hourly average gas flow rate and water (or scrubbing liquid) flow rate monitoring data according to § 63.1572;[1] determining and recording the hourly average liquid-to-gas ratio; determining and recording the daily average liquid-to-gas ratio; and maintaining the daily average liquid-to-gas ratio above the limit established during the performance test.
	d. BLD—fabric filter	Increases in relative particulate	Collecting and maintaining records of BLD system output; determining the cause of the alarm within 1 hour of the alarm; and alleviating the cause of the alarm within 3 hours by corrective action.
	e. Continuous opacity monitoring system, used for site-specific opacity limit—Cyclone or electrostatic precipitator.	The average opacity must not exceed the opacity established during the performance test.	Collecting the hourly and 3-hr rolling average opacity monitoring data according to § 63.1572; maintaining the 3-hr rolling average opacity at or above the limit established during the performance test.
5. Option 2: PM concentration limit, not subject to the NSPS for PM in 40 CFR 60.102 or in 40 CFR 60.102a(b)(1)..	PM CEMS	Not applicable	Complying with Table 6 of this subpart.
6. Option 3: Ni lb/hr limit not subject to the NSPS for PM in 40 CFR 60.102.	a. Continuous opacity monitoring system.	i. The daily average Ni operating value must not exceed the site-specific Ni operating limit established during the performance test.	(1) Collecting the hourly average continuous opacity monitoring system data according to § 63.1572; determining and recording equilibrium catalyst Ni concentration at least once a week;[2] collecting the hourly average gas flow rate monitoring data according to § 63.1572;[1] and determining and recording the hourly average Ni operating value using Equation 11 of § 63.1564.

TABLE 7 TO SUBPART UUU OF PART 63—CONTINUOUS COMPLIANCE WITH OPERATING LIMITS FOR METAL HAP EMISSIONS FROM CATALYTIC CRACKING UNITS—Continued

For each new or existing catalytic cracking unit . . .	If you use . . .	For this operating limit . . .	You shall demonstrate continuous compliance by . . .
			(2) Determining and recording the 3-hour rolling average Ni operating value and maintaining the 3-hour rolling average Ni operating value below the site-specific Ni operating limit established during the performance test. Alternatively, before [THE DATE 18 MONTHS AFTER THE DATE OF PUBLICATION OF THE FINAL RULE AMENDMENTS IN THE **FEDERAL REGISTER**], determining and recording the daily average Ni operating value and maintaining the daily average Ni operating value below the site-specific Ni operating limit established during the performance test.
	b. Continuous parameter monitoring systems—electrostatic precipitator.	i. The average gas flow rate entering or exiting the control device must not exceed the operating limit established during the performance test.	See item 4.b.i of this table.
		ii. The average voltage and secondary current (or total power input) must not fall below the level established in the performance test.	See item 4.b.ii of this table.
		iii. The monthly rolling average of the equilibrium catalyst Ni concentration must not exceed the level established during the performance test.	Determining and recording the equilibrium catalyst Ni concentration at least once a week;[2] determining and recording the monthly rolling average of the equilibrium catalyst Ni concentration once each week using the weekly or most recent value; and maintaining the monthly rolling average below the limit established in the performance test.
	c. Continuous parameter monitoring systems—wet scrubber.	i. The average pressure drop must not fall below the operating limit established in the performance test.	See item 4.c.i of this table.
		ii. The average liquid-to-gas ratio must not fall below the operating limit established during the performance test.	See item 4.c.ii of this table.
		iii. The monthly rolling average equilibrium catalyst Ni concentration must not exceed the level established during the performance test.	Determining and recording the equilibrium catalyst Ni concentration at least once a week;[2] determining and recording the monthly rolling average of equilibrium catalyst Ni concentration once each week using the weekly or most recent value; and maintaining the monthly rolling average below the limit established in the performance test.
	d. BLD—fabric filter	Increases in relative particulate	See item 4.d of this table.
	e. Continuous opacity monitoring system, used for site-specific opacity limit—Cyclone or electrostatic precipitator.	The average opacity must not exceed the opacity established during the performance test.	See item 4.e of this table.

TABLE 7 TO SUBPART UUU OF PART 63—CONTINUOUS COMPLIANCE WITH OPERATING LIMITS FOR METAL HAP EMISSIONS FROM CATALYTIC CRACKING UNITS—Continued

For each new or existing catalytic cracking unit . . .	If you use . . .	For this operating limit . . .	You shall demonstrate continuous compliance by . . .
7. Option 4: Ni per coke burn-off limit not subject to the NSPS for PM in 40 CFR 60.102..	a. Continuous opacity monitoring system..	i. The daily average Ni operating value must not exceed the site-specific Ni operating limit established during the performance test.	(1) Collecting the hourly average continuous opacity monitoring system data according to § 63.1572; collecting the hourly average gas flow rate monitoring data according to § 63.1572; [1] determining and recording equilibrium catalyst Ni concentration at least once a week; [2] and determining and recording the hourly average Ni operating value using Equation 12 of § 63.1564. (2) Determining and recording the 3-hour rolling average Ni operating value and maintaining the 3-hour rolling average Ni operating value below the site-specific Ni operating limit established during the performance test. Alternatively, before [THE DATE 18 MONTHS AFTER THE DATE OF PUBLICATION OF THE FINAL RULE AMENDMENTS IN THE **FEDERAL REGISTER**], determining and recording the daily average Ni operating value and maintaining the daily average Ni operating value below the site-specific Ni operating limit established during the performance test.
	b. Continuous parameter monitoring systems—electrostatic precipitator.	i. The daily average gas flow rate to the control device must not exceed the level established in the performance test.	See item 4.b.i of this table.
		ii. The daily average voltage and secondary current (or total power input) must not fall below the level established in the performance test.	See item 4.b.ii of this table.
		iii. The monthly rolling average equilibrium catalyst Ni concentration must not exceed the level established during the performance test.	See item 6.b.iii of this table.
	c. Continuous parameter monitoring systems—wet scrubber.	i. The daily average pressure drop must not fall below the operating limit established in the performance test.	See item 4.c.i of this table.
	.....	ii. The daily average liquid-to-gas ratio must not fall below the operating limit established during the performance test.	See item 4.c.ii of this table.
	.....	iii. The monthly rolling average equilibrium catalyst Ni concentration must not exceed the level established during the performance test.	See item 6.c.iii of this table.
	d. BLD—fabric filter	Increases in relative particulate	See item 4.d of this table.
	e. Continuous opacity monitoring system, used for site-specific opacity limit—Cyclone or electrostatic precipitator.	The average opacity must not exceed the opacity established during the performance test.	See item 4.e of this table.

[1] If applicable, you can use the alternative in § 63.1573(a)(1) for gas flow rate instead of a continuous parameter monitoring system if you used the alternative method in the initial performance test.

[2] The equilibrium catalyst Ni concentration must be measured by the procedure, Determination of Metal Concentration on Catalyst Particles (Instrumental Analyzer Procedure) in Appendix A to this subpart; or by EPA Method 6010B, Inductively Coupled Plasma-Atomic Emission Spectrometry, EPA Method 6020, Inductively Coupled Plasma-Mass Spectrometry, EPA Method 7520, Nickel Atomic Absorption, Direct Aspiration, or EPA Method 7521, Nickel Atomic Absorption, Direct Aspiration; or by an alternative to EPA Method 6010B, 6020, 7520, or 7521 satisfactory to the Administrator. The EPA Methods 6010B, 6020, 7520, and 7521 are included in ''Test Methods for Evaluating Solid Waste, Physical/Chemical Methods,'' EPA Publication SW–846, Revision 5 (April 1998). The SW–846 and Updates (document number 955–001–00000–1) are available for purchase from the Superintendent of Documents, U.S. Government Printing Office, Washington, DC 20402, (202) 512–1800; and from the National Technical Information Services (NTIS), 5285 Port Royal Road, Springfield, VA 22161, (703) 487–4650. Copies may be inspected at the EPA Docket Center, William Jefferson Clinton (WJC) West Building (Air Docket), Room 3334, 1301 Constitution Ave. NW., Washington, DC; or at the Office of the Federal Register, 800 North Capitol Street NW., Suite 700, Washington, DC. These methods are also available at *http://www.epa.gov/epaoswer/hazwaste/test/main.htm.*

■ 59. Table 8 to subpart UUU of part 63 is amended by revising the entry for item 2 to read as follows:

* * * * *

TABLE 8 TO SUBPART UUU OF PART 63—ORGANIC HAP EMISSION LIMITS FOR CATALYTIC CRACKING UNITS

For each new and existing catalytic cracking unit . . .	You shall meet the following emission limit for each catalyst regenerator vent . . .
* *	* * * * *
2. Not subject to the NSPS for CO in 40 CFR 60.103.	a. CO emissions from the catalyst regenerator vent or CO boiler serving the catalytic cracking unit must not exceed 500 ppmv (dry basis). b. If you use a flare to meet the CO limit, then on and after [THE DATE 3 YEARS AFTER THE DATE OF PUBLICATION OF THE FINAL RULE AMENDMENTS IN THE **FEDERAL REGISTER**], the flare must meet the requirements of § 63.670. Prior to [THE DATE 3 YEARS AFTER THE DATE OF PUBLICATION OF THE FINAL RULE AMENDMENTS IN THE **FEDERAL REGISTER**], the flare must meet the requirements for control devices in § 63.11(b) and visible emissions must not exceed a total of 5 minutes during any 2 consecutive hours, or the flare must meet the requirements of § 63.670.

■ 60. Table 9 to subpart UUU of part 63 is amended by revising the entry for item 2 to read as follows:

* * * * *

TABLE 9 TO SUBPART UUU OF PART 63—OPERATING LIMITS FOR ORGANIC HAP EMISSIONS FROM CATALYTIC CRACKING UNITS

For each new or existing catalytic cracking unit . . .	For this type of continuous monitoring system . . .	For this type of control device . . .	You shall meet this operating limit . . .
* *	* *	*	* *
2. Not subject to the NSPS for CO in 40 CFR 60.103.	a. Continuous emission monitoring system.	Not applicable	Not applicable.
	b. Continuous parameter monitoring systems.	i. Thermal incinerator	Maintain the daily average combustion zone temperature above the limit established during the performance test; and maintain the daily average oxygen concentration in the vent stream (percent, dry basis) above the limit established during the performance test.
		ii. Boiler or process heater with a design heat input capacity under 44 MW or a boiler or process heater in which all vent streams are not introduced into the flame zone.	Maintain the daily average combustion zone temperature above the limit established in the performance test.

TABLE 9 TO SUBPART UUU OF PART 63—OPERATING LIMITS FOR ORGANIC HAP EMISSIONS FROM CATALYTIC CRACKING UNITS—Continued

For each new or existing catalytic cracking unit . . .	For this type of continuous monitoring system . . .	For this type of control device . . .	You shall meet this operating limit . . .
		iii. Flare	On and after [THE DATE 3 YEARS AFTER THE DATE OF PUBLICATION OF THE FINAL RULE AMENDMENTS IN THE **FEDERAL REGISTER**], the flare must meet the requirements of § 63.670. Prior to [THE DATE 3 YEARS AFTER THE DATE OF PUBLICATION OF THE FINAL RULE AMENDMENTS IN THE **FEDERAL REGISTER**], the flare pilot light must be present at all times and the flare must be operating at all times that emissions may be vented to it, or the flare must meet the requirements of § 63.670.

■ 61. Table 10 to subpart UUU of part 63 is amended by revising the entry for item 2 to read as follows:

* * * * *

TABLE 10 TO SUBPART UUU OF PART 63—CONTINUOUS MONITORING SYSTEMS FOR ORGANIC HAP EMISSIONS FROM CATALYTIC CRACKING UNITS

For each new or existing catalytic cracking unit . . .	And you use this type of control device for your vent . . .	You shall install, operate, and maintain this type of continuous monitoring system . . .
* *	* * *	* *
2. Not subject to the NSPS for CO in 40 CFR 60.103.	a. Thermal incinerator	Continuous emission monitoring system to measure and record the concentration by volume (dry basis) of CO emissions from each catalyst regenerator vent; or continuous parameter monitoring systems to measure and record the combustion zone temperature and oxygen content (percent, dry basis) in the incinerator vent stream.
	b. Process heater or boiler with a design heat input capacity under 44 MW or process heater or boiler in which all vent streams are not introduced into the flame zone.	Continuous emission monitoring system to measure and record the concentration by volume (dry basis) of CO emissions from each catalyst regenerator vent; or continuous parameter monitoring systems to measure and record the combustion zone temperature.
	c. Flare	On and after [THE DATE 3 YEARS AFTER THE DATE OF PUBLICATION OF THE FINAL RULE AMENDMENTS IN THE **FEDERAL REGISTER**], the monitoring systems required in §§ 63.670 and 63.671. Prior to [THE DATE 3 YEARS AFTER THE DATE OF PUBLICATION OF THE FINAL RULE AMENDMENTS IN THE **FEDERAL REGISTER**], monitoring device such as a thermocouple, an ultraviolet beam sensor, or infrared sensor to continuously detect the presence of a pilot flame, or the monitoring systems required in §§ 63.670 and 63.671.
	d. No control device	Continuous emission monitoring system to measure and record the concentration by volume (dry basis) of CO emissions from each catalyst regenerator vent.

■ 62. Table 11 to subpart UUU of part 63 is amended by revising revising the entry for item 3 to read as follows:

* * * * *

TABLE 11 TO SUBPART UUU OF PART 63—REQUIREMENTS FOR PERFORMANCE TESTS FOR ORGANIC HAP EMISSIONS FROM CATALYTIC CRACKING UNITS NOT SUBJECT TO NEW SOURCE PERFORMANCE STANDARD (NSPS) FOR CARBON MONOXIDE (CO)

For . . .	You must . . .	Using . . .	According to these requirements . . .
* *	* *	*	* *
3. Each catalytic cracking unit catalyst regenerator vent if you use continuous parameter monitoring systems.	a. Measure the CO concentration (dry basis) of emissions exiting the control device.	Method 10, 10A, or 10B in appendix A to part 60 of this chapter, as applicable.	
	b. Establish each operating limit in Table 9 of this subpart that applies to you.	Data from the continuous parameter monitoring systems.	
	c. Thermal incinerator combustion zone temperature.	Data from the continuous parameter monitoring systems.	Collect temperature monitoring data every 15 minutes during the entire period of the CO initial performance test; and determine and record the minimum hourly average combustion zone temperature from all the readings.
	d. Thermal incinerator: oxygen, content (percent, dry basis) in the incinerator vent stream.	Data from the continuous parameter monitoring systems.	Collect oxygen concentration (percent, dry basis) monitoring data every 15 minutes during the entire period of the CO initial performance test; and determine and record the minimum hourly average percent excess oxygen concentration from all the readings.
	e. If you use a process heater or boiler with a design heat input capacity under 44 MW or process heater or boiler in which all vent streams are not introduced into the flame zone, establish operating limit for combustion zone temperature.	Data from the continuous parameter monitoring systems.	Collect the temperature monitoring data every 15 minutes during the entire period of the CO initial performance test; and determine and record the minimum hourly average combustion zone temperature from all the readings.
	f. If you use a flare, conduct visible emission observations.	Method 22 (40 CFR part 60, appendix A).	On and after [THE DATE 3 YEARS AFTER THE DATE OF PUBLICATION OF THE FINAL RULE AMENDMENTS IN THE **FEDERAL REGISTER**], meet the requirements of § 63.670. Prior to [THE DATE 3 YEARS AFTER THE DATE OF PUBLICATION OF THE FINAL RULE AMENDMENTS IN THE **FEDERAL REGISTER**], maintain a 2-hour observation period; and record the presence of a flame at the pilot light over the full period of the test or meet the requirements of § 63.670.

TABLE 11 TO SUBPART UUU OF PART 63—REQUIREMENTS FOR PERFORMANCE TESTS FOR ORGANIC HAP EMISSIONS FROM CATALYTIC CRACKING UNITS NOT SUBJECT TO NEW SOURCE PERFORMANCE STANDARD (NSPS) FOR CARBON MONOXIDE (CO)—Continued

For . . .	You must . . .	Using . . .	According to these requirements . . .
	g. If you use a flare, determine that the flare meets the requirements for net heating value of the gas being combusted and exit velocity.	40 CFR 63.11(b)(6) through (8)	On and after [THE DATE 3 YEARS AFTER THE DATE OF PUBLICATION OF THE FINAL RULE AMENDMENTS IN THE **FEDERAL REGISTER**], the flare must meet the requirements of § 63.670. Prior to [THE DATE 3 YEARS AFTER THE DATE OF PUBLICATION OF THE FINAL RULE AMENDMENTS IN THE **FEDERAL REGISTER**], the flare must meet the control device requirements in § 63.11(b) or the requirements of § 63.670.

■ 63. Table 12 to subpart UUU of part 63 is amended by revising the entry for item 2 to read as follows:

* * * * *

TABLE 12 TO SUBPART UUU OF PART 63—INITIAL COMPLIANCE WITH ORGANIC HAP EMISSION LIMITS FOR CATALYTIC CRACKING UNITS

For each new and existing catalytic cracking unit . . .	For the following emission limit . . .	You have demonstrated initial compliance if . . .
* *	* * *	* *
2. Not subject to the NSPS for CO in 40 CFR 60.103.	a. CO emissions from your catalyst regenerator vent or CO boiler serving the catalytic cracking unit must not exceed 500 ppmv (dry basis).	i. If you use a continuous parameter monitoring system, the average CO emissions measured by Method 10 over the period of the initial performance test are less than or equal to 500 ppmv (dry basis). ii. If you use a continuous emission monitoring system, the hourly average CO emissions over the 24-hour period for the initial performance test are not more than 500 ppmv (dry basis); and your performance evaluation shows your continuous emission monitoring system meets the applicable requirements in § 63.1572.
	b. If you use a flare, visible emissions must not exceed a total of 5 minutes during any 2 operating hours.	On and after [THE DATE 3 YEARS AFTER THE DATE OF PUBLICATION OF THE FINAL RULE AMENDMENTS IN THE **FEDERAL REGISTER**], the flare meets the requirements of § 63.670. Prior to [THE DATE 3 YEARS AFTER THE DATE OF PUBLICATION OF THE FINAL RULE AMENDMENTS IN THE **FEDERAL REGISTER**], visible emissions, measured by Method 22 during the 2-hour observation period during the initial performance test, are no higher than 5 minutes, or the flare meets the requirements of § 63.670.

■ 64. Table 13 to subpart UUU of part 63 is amended by revising the entry for item 2 to read as follows:

* * * * *

TABLE 13 TO SUBPART UUU OF PART 63—CONTINUOUS COMPLIANCE WITH ORGANIC HAP EMISSION LIMITS FOR CATALYTIC CRACKING UNITS

For each new and existing catalytic cracking unit . . .	Subject to this emission limit for your catalyst regenerator vent . . .	If you must . .	You shall demonstrate continuous compliance by . . .
* *	* *	*	* *
2. Not subject to the NSPS for CO in 40 CFR 60.103.	i. CO emissions from your catalyst regenerator vent or CO boiler serving the catalytic cracking unit must not exceed 500 ppmv (dry basis).	Continuous emission monitoring system.	Same as above.
	ii. CO emissions from your catalyst regenerator vent or CO boiler serving the catalytic cracking unit must not exceed 500 ppmv (dry basis).	Continuous parameter monitoring system.	Maintaining the hourly average CO concentration below 500 ppmv (dry basis).
	iii. Visible emissions from a flare must not exceed a total of 5 minutes during any 2-hour period.	Control device-flare	On and after [THE DATE 3 YEARS AFTER THE DATE OF PUBLICATION OF THE FINAL RULE AMENDMENTS IN THE **FEDERAL REGISTER**], meeting the requirements of § 63.670. Prior to [THE DATE 3 YEARS AFTER THE DATE OF PUBLICATION OF THE FINAL RULE AMENDMENTS IN THE **FEDERAL REGISTER**], maintaining visible emissions below a total of 5 minutes during any 2-hour operating period, or meeting the requirements of § 63.670.

■ 65. Table 14 to subpart UUU of part 63 is amended by revising the entry for item 2 to read as follows:

* * * * *

TABLE 14 TO SUBPART UUU OF PART 63—CONTINUOUS COMPLIANCE WITH OPERATING LIMITS FOR ORGANIC HAP EMISSIONS FROM CATALYTIC CRACKING UNITS

For each new existing catalytic cracking unit . . .	If you use . . .	For this operating limit . . .	You shall demonstrate continuous compliance by . . .
*	* *	* *	* *
2. Not subject to the NSPS for CO in 40 CFR 60.103.	a. Continuous emission monitoring system.	Not applicable	Complying with Table 13 of this subpart.
	b. Continuous parameter monitoring systems—thermal incinerator.	i. The daily average combustion zone temperature must not fall below the level established during the performance test.	Collecting the hourly and daily average temperature monitoring data according to § 63.1572; and maintaining the daily average combustion zone temperature above the limit established during the performance test.
		ii. The daily average oxygen concentration in the vent stream (percent, dry basis) must not fall below the level established during the performance test.	Collecting the hourly and daily average oxygen concentration monitoring data according to § 63.1572; and maintaining the daily average oxygen concentration above the limit established during the performance test.

TABLE 14 TO SUBPART UUU OF PART 63—CONTINUOUS COMPLIANCE WITH OPERATING LIMITS FOR ORGANIC HAP EMISSIONS FROM CATALYTIC CRACKING UNITS—Continued

For each new existing catalytic cracking unit . . .	If you use . . .	For this operating limit . . .	You shall demonstrate continuous compliance by . . .
	c. Continuous parameter monitoring systems—boiler or process heater with a design heat input capacity under 44 MW or boiler or process heater in which all vent streams are not introduced into the flame zone.	The daily combustion zone temperature must not fall below the level established in the performance test.	Collecting the average hourly and daily temperature monitoring data according to § 63.1572; and maintaining the daily average combustion zone temperature above the limit established during the performance test.
	d. Continuous parameter monitoring system—flare.	The flare pilot light must be present at all times and the flare must be operating at all times that emissions may be vented to it.	On and after [THE DATE 3 YEARS AFTER THE DATE OF PUBLICATION OF THE FINAL RULE AMENDMENTS IN THE **FEDERAL REGISTER**], meeting the requirements of § 63.670. Prior to [THE DATE 3 YEARS AFTER THE DATE OF PUBLICATION OF THE FINAL RULE AMENDMENTS IN THE **FEDERAL REGISTER**], collecting the flare monitoring data according to § 63.1572 and recording for each 1-hour period whether the monitor was continuously operating and the pilot light was continuously present during each 1-hour period, or meeting the requirements of § 63.670.

■ 66. Table 15 to subpart UUU of part 63 is amended by revising the entry for item 1 to read as follows:

* * * * *

TABLE 15 TO SUBPART UUU OF PART 63—ORGANIC HAP EMISSION LIMITS FOR CATALYTIC REFORMING UNITS

For each applicable process vent for a new or existing catalytic reforming unit . . .	You shall meet this emission limit during initial catalyst depressuring and catalyst purging operations . . .
1. Option 1	On and after [THE DATE 3 YEARS AFTER THE DATE OF PUBLICATION OF THE FINAL RULE AMENDMENTS IN THE **FEDERAL REGISTER**], vent emissions to a flare that meets the requirements of § 63.670. Prior to [THE DATE 3 YEARS AFTER THE DATE OF PUBLICATION OF THE FINAL RULE AMENDMENTS IN THE **FEDERAL REGISTER**], vent emissions to a flare that meets the requirements for control devices in § 63.11(b) and visible emissions from a flare must not exceed a total of 5 minutes during any 2-hour operating period, or vent emissions to a flare that meets the requirements of § 63.670.
* * * * * * *	

■ 67. Table 16 to subpart UUU of part 63 is amended by revising the entry for item 1 to read as follows:

* * * * *

TABLE 16 TO SUBPART UUU OF PART 63—OPERATING LIMITS FOR ORGANIC HAP EMISSIONS FROM CATALYTIC REFORMING UNITS

For each new or existing catalytic reforming unit . . .	For this type of control device . . .	You shall meet this operating limit during initial catalyst depressuring and purging operations . . .
1. Option 1: vent to flare	Flare	On and after [THE DATE 3 YEARS AFTER THE DATE OF PUBLICATION OF THE FINAL RULE AMENDMENTS IN THE **FEDERAL REGISTER**], the flare must meet the requirements of § 63.670. Prior to [THE DATE 3 YEARS AFTER THE DATE OF PUBLICATION OF THE FINAL RULE AMENDMENTS IN THE **FEDERAL REGISTER**], the flare pilot light must be present at all times and the flare must be operating at all times that emissions may be vented to it, or the flare must meet the requirements of § 63.670.
* * * * * * *		

■ 68. Table 17 to subpart UUU of part 63 is amended by revising the entry for item 1 to read as follows:

* * * * *

TABLE 17 TO SUBPART UUU OF PART 63—CONTINUOUS MONITORING SYSTEMS FOR ORGANIC HAP EMISSIONS FROM CATALYTIC REFORMING UNITS

For each applicable process vent for a new or existing catalytic reforming unit . . .	If you use this type of control device . . .	You shall install and operate this type of continuous monitoring system . . .
1. Option 1: vent to a flare	Flare	On and after [THE DATE 3 YEARS AFTER THE DATE OF PUBLICATION OF THE FINAL RULE AMENDMENTS IN THE **FEDERAL REGISTER**], the monitoring systems required in §§ 63.670 and 63.671. Prior to [THE DATE 3 YEARS AFTER THE DATE OF PUBLICATION OF THE FINAL RULE AMENDMENTS IN THE **FEDERAL REGISTER**], monitoring device such as a thermocouple, an ultraviolet beam sensor, or infrared sensor to continuously detect the presence of a pilot flame, or the monitoring systems required in §§ 63.670 and 63.671.
* * * * * * *		

■ 69. Table 18 to subpart UUU of part 63 is amended by:

■ a. Revising the column headings and

■ b. Revising the entry for item 1.

The revisions read as follows:

* * * * *

TABLE 18 TO SUBPART UUU OF PART 63—REQUIREMENTS FOR PERFORMANCE TESTS FOR ORGANIC HAP EMISSIONS FROM CATALYTIC REFORMING UNITS

For each new or existing catalytic reforming unit . . .	You must . . .	Using . . .	According to these requirements . . .
1. Option 1: Vent to a flare.	a. Conduct visible emission observations.	Method 22 (40 CFR part 60, appendix A).	On and after [THE DATE 3 YEARS AFTER THE DATE OF PUBLICATION OF THE FINAL RULE AMENDMENTS IN THE **FEDERAL REGISTER**], the flare must meet the requirements of § 63.670. Prior to [THE DATE 3 YEARS AFTER THE DATE OF PUBLICATION OF THE FINAL RULE AMENDMENTS IN THE **FEDERAL REGISTER**],2-hour observation period. Record the presence of a flame at the pilot light over the full period of the test, or the requirements of § 63.670.

TABLE 18 TO SUBPART UUU OF PART 63—REQUIREMENTS FOR PERFORMANCE TESTS FOR ORGANIC HAP EMISSIONS FROM CATALYTIC REFORMING UNITS—Continued

For each new or existing catalytic reforming unit . . .	You must . . .	Using . . .	According to these requirements . . .
	b. Determine that the flare meets the requirements for net heating value of the gas being combusted and exit velocity.	40 CFR 63.11(b)(6) through (8)	On and after [THE DATE 3 YEARS AFTER THE DATE OF PUBLICATION OF THE FINAL RULE AMENDMENTS IN THE **FEDERAL REGISTER**], the flare must meet the requirements of § 63.670. Prior to [THE DATE 3 YEARS AFTER THE DATE OF PUBLICATION OF THE FINAL RULE AMENDMENTS IN THE **FEDERAL REGISTER**], the flare must meet the control device requirements in § 63.11(b) or the requirements of § 63.670.
*	*	*	*	*	*	*

■ 70. Table 19 to subpart UUU of part 63 is amended by revising the entry for item 1 to read as follows:

* * * * *

TABLE 19 TO SUBPART UUU OF PART 63—INITIAL COMPLIANCE WITH ORGANIC HAP EMISSION LIMITS FOR CATALYTIC REFORMING UNITS

For each applicable process vent for a new or existing catalytic reforming unit . . .	For the following emission limit . . .	You have demonstrated initial compliance if . . .
Option 1	Visible emissions from a flare must not exceed a total of 5 minutes during any 2 consecutive hours.	On and after [THE DATE 3 YEARS AFTER THE DATE OF PUBLICATION OF THE FINAL RULE AMENDMENTS IN THE **FEDERAL REGISTER**], the flare meets the requirements of § 63.670. Prior to [THE DATE 3 YEARS AFTER THE DATE OF PUBLICATION OF THE FINAL RULE AMENDMENTS IN THE **FEDERAL REGISTER**], visible emissions, measured using Method 22 over the 2-hour observation period of the performance test, do not exceed a total of 5 minutes, or the flare meets the requirements of § 63.670.
*	*	*	*	*	*	*

■ 71. Table 20 to subpart UUU of part 63 is amended by revising the entry for item 1 to read as follows:

* * * * *

TABLE 20 TO SUBPART UUU OF PART 63—CONTINUOUS COMPLIANCE WITH ORGANIC HAP EMISSION LIMITS FOR CATALYTIC REFORMING UNITS

For each applicable process vent for a new or existing catalytic reforming unit . . .	For this emission limit . . .	You shall demonstrate continuous compliance during initial catalyst depressuring and catalyst purging operations by . . .
1. Option 1	Vent emissions from your process vent to a flare.	On and after [THE DATE 3 YEARS AFTER THE DATE OF PUBLICATION OF THE FINAL RULE AMENDMENTS IN THE **FEDERAL REGISTER**], meeting the requirements of § 63.670. Prior to [THE DATE 3 YEARS AFTER THE DATE OF PUBLICATION OF THE FINAL RULE AMENDMENTS IN THE **FEDERAL REGISTER**], maintaining visible emissions from a flare below a total of 5 minutes during any 2 consecutive hours, or meeting the requirements of § 63.670.

TABLE 20 TO SUBPART UUU OF PART 63—CONTINUOUS COMPLIANCE WITH ORGANIC HAP EMISSION LIMITS FOR CATALYTIC REFORMING UNITS—Continued

For each applicable process vent for a new or existing catalytic reforming unit . . .	For this emission limit . . .	You shall demonstrate continuous compliance during initial catalyst depressuring and catalyst purging operations by . . .
* * * * * * *		

■ 72. Table 21 to subpart UUU of part 63 is amended by revising the entry for item 1 to read as follows:

* * * * *

TABLE 21 TO SUBPART UUU OF PART 63—CONTINUOUS COMPLIANCE WITH OPERATING LIMITS FOR ORGANIC HAP EMISSIONS FROM CATALYTIC REFORMING UNITS

For each applicable process vent for a new or existing catalytic reforming unit . . .	If you use . . .	For this operating limit . . .	You shall demonstrate continuous compliance during initial catalyst depressuring and purging operations by . . .
1. Option 1	Flare	The flare pilot light must be present at all times and the flare must be operating at all times that emissions may be vented to it.	On and after [THE DATE 3 YEARS AFTER THE DATE OF PUBLICATION OF THE FINAL RULE AMENDMENTS IN THE **FEDERAL REGISTER**], meeting the requirements of § 63.670. Prior to [THE DATE 3 YEARS AFTER THE DATE OF PUBLICATION OF THE FINAL RULE AMENDMENTS IN THE **FEDERAL REGISTER**], collecting flare monitoring data according to § 63.1572 and recording for each 1-hour period whether the monitor was continuously operating and the pilot light was continuously present during each 1-hour period, or meeting the requirements of § 63.670.
* * * * * * *			

■ 73. Table 22 to subpart UUU of part 63 is amended by revising the entries for items 2 and 3 to read as follows:

* * * * *

TABLE 22 TO SUBPART UUU OF PART 63—INORGANIC HAP EMISSION LIMITS FOR CATALYTIC REFORMING UNITS

For . . .	You shall meet this emission limit for each applicable catalytic reforming unit process vent during coke burn-off and catalyst rejuvenation . . .
* * * * * * *	
2. Each existing cyclic or continuous catalytic reforming unit.	Reduce uncontrolled emissions of HCl by 97 percent by weight or to a concentration of 10 ppmv (dry basis), corrected to 3 percent oxygen.
3. Each new semi-regenerative, cyclic, or continuous catalytic reforming unit.	Reduce uncontrolled emissions of HCl by 97 percent by weight or to a concentration of 10 ppmv (dry basis), corrected to 3 percent oxygen.

■ 74. Table 24 to subpart UUU of part 63 is amended by revising the entries for Items 2 through 4 and footnote 2 to read as follows:

* * * * *

TABLE 24 TO SUBPART UUU OF PART 63—CONTINUOUS MONITORING SYSTEMS FOR INORGANIC HAP EMISSIONS FROM CATALYTIC REFORMING UNITS

If you use this type of control device for your vent . . .	You shall install and operate this type of continuous monitoring system . . .

TABLE 24 TO SUBPART UUU OF PART 63—CONTINUOUS MONITORING SYSTEMS FOR INORGANIC HAP EMISSIONS FROM CATALYTIC REFORMING UNITS—Continued

If you use this type of control device for your vent . . .	You shall install and operate this type of continuous monitoring system . . .
* * *	* * * *
2. Internal scrubbing system or no control device (e.g., hot regen system) to meet HCl outlet concentration limit.	Colormetric tube sampling system to measure the HCl concentration in the catalyst regenerator exhaust gas during coke burn-off and catalyst rejuvenation. The colormetric tube sampling system must meet the requirements in Table 41 of this subpart.
3. Internal scrubbing system to meet HCl percent reduction standard.	Continuous parameter monitoring system to measure and record the gas flow rate entering or exiting the internal scrubbing system during coke burn-off and catalyst rejuvenation; and continuous parameter monitoring system to measure and record the total water (or scrubbing liquid) flow rate entering the internal scrubbing system during coke burn-off and catalyst rejuvenation; and continuous parameter monitoring system to measure and record the pH or alkalinity of the water (or scrubbing liquid) exiting the internal scrubbing system during coke burn-off and catalyst rejuvenation.[2]
4. Fixed-bed gas-solid adsorption system	Continuous parameter monitoring system to measure and record the temperature of the gas entering or exiting the adsorption system during coke burn-off and catalyst rejuvenation; and colormetric tube sampling system to measure the gaseous HCl concentration in the adsorption system exhaust and at a point within the absorbent bed not to exceed 90 percent of the total length of the absorbent bed during coke burn-off and catalyst rejuvenation. The colormetric tube sampling system must meet the requirements in Table 41 of this subpart.
* * *	* * * *

* * * * *

[2] If applicable, you can use the alternative in § 63.1573(c)(1) instead of a continuous parameter monitoring system for pH of the water (or scrubbing liquid) or the alternative in § 63.1573(c)(2) instead of a continuous parameter monitoring system for alkalinity of the water (or scrubbing liquid).

■ 75. Table 25 to subpart UUU of part 63 is amended by revising the entries for items 2.a and 4.a to read as follows:

* * * * *

TABLE 25 TO SUBPART UUU OF PART 63—REQUIREMENTS FOR PERFORMANCE TESTS FOR INORGANIC HAP EMISSIONS FROM CATALYTIC REFORMING UNITS

For each new and existing catalytic reforming unit using . . .	You shall . . .	Using . . .	According to these requirements . . .
*	* *	*	* * *
2. Wet scrubber	a. Establish operating limit for pH level or alkalinity.	i. Data from continuous parameter monitoring systems.	Measure and record the pH or alkalinity of the water (or scrubbing liquid) exiting scrubber every 15 minutes during the entire period of the performance test. Determine and record the minimum hourly average pH or alkalinity level from the recorded values.
		ii. Alternative pH procedure in § 63.1573 (b)(1).	Measure and record the pH of the water (or scrubbing liquid) exiting the scrubber during coke burn-off and catalyst rejuvenation using pH strips at least three times during each test run. Determine and record the average pH level for each test run. Determine and record the minimum test run average pH level.
		iii. Alternative alkalinity method in § 63.1573(c)(2).	Measure and record the alkalinity of the water (or scrubbing liquid) exiting the scrubber during coke burn-off and catalyst rejuvenation using discrete titration at least three times during each test run. Determine and record the average alkalinity level for each test run. Determine and record the minimum test run average alkalinity level.
*	* *	*	* * *
4. Internal scrubbing system meeting HCl percent reduction standard.	a. Establish operating limit for pH level or alkalinity.	i. Data from continuous parameter monitoring system.	Measure and record the pH alkalinity of the water (or scrubbing liquid) exiting the internal scrubbing system every 15 minutes during the entire period of the performance test. Determine and record the minimum hourly average pH or alkalinity level from the recorded values.

TABLE 25 TO SUBPART UUU OF PART 63—REQUIREMENTS FOR PERFORMANCE TESTS FOR INORGANIC HAP EMISSIONS FROM CATALYTIC REFORMING UNITS—Continued

For each new and existing catalytic reforming unit using . . .	You shall . . .	Using . . .	According to these requirements . . .
		ii. Alternative pH method in § 63.1573(c)(1).	Measure and record pH of the water (or scrubbing liquid) exiting the internal scrubbing system during coke burn-off and catalyst rejuvenation using pH strips at least three times during each test run. Determine and record the average pH level for each test run. Determine and record the minimum test run average pH level.
		iii. Alternative alkalinity method in § 63.1573(c)(2).	Measure and record the alkalinity of the water (or scrubbing liquid) exiting the internal scrubbing system during coke burn-off and catalyst rejuvenation using discrete titration at least three times during each test run. Determine and record the average alkalinity level for each test run. Determine and record the minimum test run average alkalinity level.
*	*	*	*	*	*	*

* * * * *

■ 76. Table 28 to subpart UUU of part 63 is amended by revising the entry for item 5 and footnote 1 to read as follows:

The revisions read as follows:

* * * * *

TABLE 28 TO SUBPART UUU OF PART 63—CONTINUOUS COMPLIANCE WITH OPERATING LIMITS FOR INORGANIC HAP EMISSIONS FROM CATALYTIC REFORMING UNITS

For each new and existing catalytic reforming unit using this type of control device or system . . .	For this operating limit . . .	You shall demonstrate continuous compliance during coke burn-off and catalyst rejuvenation by . . .
* *	* *	* * *
5. Moving-bed gas-solid adsorption system (e.g., Chlorsorb™ System.	a. The daily average temperature of the gas entering or exiting the adsorption system must not exceed the limit established during the performance test.	Collecting the hourly and daily average temperature monitoring data according to § 63.1572; and maintaining the daily average temperature below the operating limit established during the performance test.
	b. The weekly average chloride level on the sorbent entering the adsorption system must not exceed the design or manufacturer's recommended limit (1.35 weight percent for the Chlorsorb™ System).	Collecting samples of the sorbent exiting the adsorption system three times per week (on non-consecutive days); and analyzing the samples for total chloride;[3] and determining and recording the weekly average chloride concentration; and maintaining the chloride concentration below the design or manufacturer's recommended limit (1.35 weight percent for the Chlorsorb™ System).
	c. The weekly average chloride level on the sorbent exiting the adsorption system must not exceed the design or manufacturer's recommended limit (1.8 weight percent for the Chlorsorb™ System).	Collecting samples of the sorbent exiting the adsorption system three times per week (on non-consecutive days); and analyzing the samples for total chloride concentration; and determining and recording the weekly average chloride concentration; and maintaining the chloride concentration below the design or manufacturer's recommended limit (1.8 weight percent Chlorsorb™ System).

[1] If applicable, you can use either alternative in § 63.1573(c) instead of a continuous parameter monitoring system for pH or alkalinity if you used the alternative method in the initial performance test.

* * * * *

■ 77. Table 29 to subpart UUU of part 63 is revised to read as follows:

As stated in § 63.1568(a)(1), you shall meet each emission limitation in the following table that applies to you.

TABLE 29 TO SUBPART UUU OF PART 63—HAP EMISSION LIMITS FOR SULFUR RECOVERY UNITS

For . . .	You shall meet this emission limit for each process vent . . .
1. Each new or existing Claus sulfur recovery unit part of a sulfur recovery plant with design capacity greater than 20 long tons per day and subject to the NSPS for sulfur oxides in 40 CFR 60.104(a)(2) or in 40 CFR 60.102a(f)(1).	a. 250 ppmv (dry basis) of sulfur dioxide (SO_2) at zero percent excess air, or concentration determined using Equation 1 of 40 CFR 60.102a(f)(1)(i), if you use an oxidation control system or if you use a reduction control system followed by incineration. b. 300 ppmv of reduced sulfur compounds calculated as ppmv SO_2 (dry basis) at zero percent excess air, or concentration determined using Equation 1 of 40 CFR 60.102a(f)(1)(i), if you use a reduction control system without incineration.
2. Each new or existing sulfur recovery unit (Claus or other type, regardless of size) not subject to the NSPS for sulfur oxides in 40 CFR 60.104(a)(2) or in 40 CFR 60.102a(f)(1): Option 1 (Elect NSPS).	a. 250 ppmv (dry basis) of SO_2 at zero percent excess air, or concentration determined using Equation 1 of 40 CFR 60.102a(f)(1)(i), if you use an oxidation control system or if you use a reduction control system followed by incineration. b. 300 ppmv of reduced sulfur compounds calculated as ppmv SO_2 (dry basis) at zero percent excess air, or concentration determined using Equation 1 of 40 CFR 60.102a(f)(1)(i), if you use a reduction control system without incineration.
3. Each new or existing sulfur recovery unit (Claus or other type, regardless of size) not subject to the NSPS for sulfur oxides in 40 CFR 60.104(a)(2) or in 40 CFR 60.102a(f)(1): Option 2 (TRS limit).	300 ppmv of total reduced sulfur (TRS) compounds, expressed as an equivalent SO_2 concentration (dry basis) at zero percent oxygen.

■ 78. Table 30 to subpart UUU of part 63 is revised to read as follows:

As stated in § 63.1568(a)(2), you shall meet each operating limit in the following table that applies to you.

TABLE 30 TO SUBPART UUU OF PART 63—OPERATING LIMITS FOR HAP EMISSIONS FROM SULFUR RECOVERY UNITS

For . . .	If use this type of control device	You shall meet this operating limit . . .
1. Each new or existing Claus sulfur recovery unit part of a sulfur recovery plant with design capacity greater than 20 long tons per day and subject to the NSPS for sulfur oxides in 40 CFR 60.104(a)(2) or in 40 CFR 60.102a(f)(1).	Not applicable	Not applicable.
2. Each new or existing sulfur recovery unit (Claus or other type, regardless of size) not subject to the NSPS for sulfur oxides in 40 CFR 60.104(a)(2) or in 40 CFR 60.102a(f)(1): Option 1 (Elect NSPS).	Not applicable	Not applicable.
3. Each new or existing sulfur recovery unit (Claus or other type, regardless of size) not subject to the NSPS for sulfur oxides in 40 CFR 60.104(a)(2) or in 40 CFR 60.102a(f)(1): Option 2 (TRS limit), if using continuous emissions monitoring systems.	Not applicable	Not applicable.
4. Each new or existing sulfur recovery unit (Claus or other type, regardless of size) not subject to the NSPS for sulfur oxides in 40 CFR 60.104(a)(2) or in 40 CFR 60.102a(f)(1): Option 2 (TRS limit), if using continuous parameter monitoring systems.	Thermal incinerator	Maintain the daily average combustion zone temperature above the limit established during the performance test; and maintain the daily average oxygen concentration in the vent stream (percent, dry basis) above the limit established during the performance test.

■ 79. Table 31 to subpart UUU is revised to read as follows:

As stated in § 63.1568(b)(1), you shall meet each requirement in the following table that applies to you.

TABLE 31 TO SUBPART UUU OF PART 63—CONTINUOUS MONITORING SYSTEMS FOR HAP EMISSIONS FROM SULFUR RECOVERY UNITS

For . . .	For this limit . . .	You shall install and operate this continuous monitoring system . . .
1. Each new or existing Claus sulfur recovery unit part of a sulfur recovery plant with design capacity greater than 20 long tons per day and subject to the NSPS for sulfur oxides in 40 CFR 60.104(a)(2) or in 40 CFR 60.102a(f)(1).	a. 250 ppmv (dry basis) of SO_2 at zero percent excess air if you use an oxidation or reduction control system followed by incineration.	Continuous emission monitoring system to measure and record the hourly average concentration of SO_2 (dry basis) at zero percent excess air for each exhaust stack. This system must include an oxygen monitor for correcting the data for excess air.

TABLE 31 TO SUBPART UUU OF PART 63—CONTINUOUS MONITORING SYSTEMS FOR HAP EMISSIONS FROM SULFUR RECOVERY UNITS—Continued

For . . .	For this limit . . .	You shall install and operate this continuous monitoring system . . .
	b. 300 ppmv of reduced sulfur compounds calculated as ppmv SO_2 (dry basis) at zero percent excess air if you use a reduction control system without incineration.	Continuous emission monitoring system to measure and record the hourly average concentration of reduced sulfur and oxygen (O_2) emissions. Calculate the reduced sulfur emissions as SO_2 (dry basis) at zero percent excess air. *Exception:* You can use an instrument having an air or SO_2 dilution and oxidation system to convert the reduced sulfur to SO_2 for continuously monitoring and recording the concentration (dry basis) at zero percent excess air of the resultant SO_2 instead of the reduced sulfur monitor. The monitor must include an oxygen monitor for correcting the data for excess oxygen.
	c. If you use Equation 1 of 40 CFR 60.102a(f)(1)(i) to set your emission limit.	Complete either item 1.a or item 1.b; and you must also install and operate a continuous emission monitoring system to measure and record the O_2 concentration for the inlet air/oxygen supplied to the system.
2. Option 1: Elect NSPS. Each new or existing sulfur recovery unit (Claus or other type, regardless of size) not subject to the NSPS for sulfur oxides in paragraph (a) (2) of 40 CFR 60.104 or in 40 CFR 60.102a(f)(1).	a. 250 ppmv (dry basis) of SO_2 at zero percent excess air if you use an oxidation or reduction control system followed by incineration.	Continuous emission monitoring system to measure and record the hourly average concentration of SO_2 (dry basis), at zero percent excess air for each exhaust stack. This system must include an oxygen monitor for correcting the data for excess air.
	b. 300 ppmv of reduced sulfur compounds calculated as ppmv SO_2 (dry basis) at zero percent excess air if you use a reduction control system without incineration.	Continuous emission monitoring system to measure and record the hourly average concentration of reduced sulfur and O_2 emissions for each exhaust stack. Calculate the reduced sulfur emissions as SO_2 (dry basis), at zero percent excess air. *Exception:* You can use an instrument having an air or O_2 dilution and oxidation system to convert the reduced sulfur to SO_2 for continuously monitoring and recording the concentration (dry basis) at zero percent excess air of the resultant SO_2 instead of the reduced sulfur monitor. The monitor must include an oxygen monitor for correcting the data for excess oxygen.
	c. If you use Equation 1 of 40 CFR 60.102a(f)(1)(i) to set your emission limit.	Complete either item 2.a or item 2.b; and you must also install and operate a continuous emission monitoring system to measure and record the O_2 concentration for the inlet air/oxygen supplied to the system.
3. Option 2: TRS limit. Each new or existing sulfur recovery unit (Claus or other type, regardless of size) not subject to the NSPS for sulfur oxides in 40 CFR 60.104(a)(2) or in 40 CFR 60.102a(f)(1).	300 ppmv of total reduced sulfur (TRS) compounds, expressed as an equivalent SO_2 concentration (dry basis) at zero percent oxygen.	i. Continuous emission monitoring system to measure and record the hourly average concentration of TRS for each exhaust stack; this monitor must include an oxygen monitor for correcting the data for excess oxygen; or ii. Continuous parameter monitoring systems to measure and record the combustion zone temperature of each thermal incinerator and the oxygen content (percent, dry basis) in the vent stream of the incinerator.

■ 80. Table 32 to subpart UUU of part 63 is revised to read as follows:

As stated in § 63.1568(b)(2) and (3), you shall meet each requirement in the following table that applies to you.

TABLE 32 TO SUBPART UUU OF PART 63—REQUIREMENTS FOR PERFORMANCE TESTS FOR HAP EMISSIONS FROM SULFUR RECOVERY UNITS NOT SUBJECT TO THE NEW SOURCE PERFORMANCE STANDARDS FOR SULFUR OXIDES

For . . .	You must . . .	Using . . .	According to these requirements . . .
1. Each new and existing sulfur recovery unit: Option 1 (Elect NSPS).	Measure SO_2 concentration (for an oxidation or reduction system followed by incineration) or measure the concentration of reduced sulfur (or SO_2 if you use an instrument to convert the reduced sulfur to SO_2) for a reduction control system without incineration.	Data from continuous emission monitoring system.	Collect SO_2 monitoring data every 15 minutes for 24 consecutive operating hours. Reduce the data to 1-hour averages computed from four or more data points equally spaced over each 1-hour period.
	Measure O_2 concentration for the inlet air/oxygen supplied to the system, if using Equation 1 of 40 CFR 60.102a(f)1)(i) to set your emission limit.	Data from continuous emission monitoring system.	Collect O_2 monitoring data every 15 minutes for 24 consecutive operating hours. Reduce the data to 1-hour averages computed from four or more data points equally spaced over each 1-hour period; and average over the 24-hour period for input to Equation 1 of 40 CFR 60.102a(f)(1)(i).
2. Each new and existing sulfur recovery unit: Option 2 (TRS limit), using CEMS.	Measure the concentration of reduced sulfur (or SO_2 if you use an instrument to convert the reduced sulfur to SO_2).	Data from continuous emission monitoring system.	Collect TRS data every 15 minutes for 24 consecutive operating hours. Reduce the data to 1-hour averages computed from four or more data points equally spaced over each 1-hour period.
3. Each new and existing sulfur recovery unit: Option 2 (TRS limit), if using continuous parameter monitoring systems.	a. Select sampling port's location and the number of traverse ports.	Method 1 or 1A in Appendix A–1 to part 60 of this chapter.	Sampling sites must be located at the outlet of the control device and prior to any releases to the atmosphere.
	b. Determine velocity and volumetric flow rate.	Method 2, 2A, 2C, 2D, 2F, or 2G in appendix A to part 60 of this chapter, as applicable.	
	c. Conduct gas molecular weight analysis; obtain the oxygen concentration needed to correct the emission rate for excess air.	Method 3, 3A, or 3B in appendix A to part 60 of this chapter, as applicable.	Take the samples simultaneously with reduced sulfur or moisture samples.
	d. Measure moisture content of the stack gas.	Method 4 in appendix A to part 60 of this chapter.	Make your sampling time for each Method 4 sample equal to that for 4 Method 15 samples.
	e. Measure the concentration of TRS.	Method 15 or 15A in appendix A to part 60 of this chapter, as applicable.	If the cross-sectional area of the duct is less than 5 square meters (m^2) or 54 square feet, you must use the centroid of the cross section as the sampling point. If the cross-sectional area is 5 m^2 or more and the centroid is more than 1 meter (m) from the wall, your sampling point may be at a point no closer to the walls than 1 m or 39 inches. Your sampling rate must be at least 3 liters per minute or 0.10 cubic feet per minute to ensure minimum residence time for the sample inside the sample lines.
	f. Calculate the SO_2 equivalent for each run after correcting for moisture and oxygen.	The arithmetic average of the SO_2 equivalent for each sample during the run.	
	g. Correct the reduced sulfur samples to zero percent excess air.	Equation 1 of § 63.1568.	
	h. Establish each operating limit in Table 30 of this subpart that applies to you.	Data from the continuous parameter monitoring system.	

TABLE 32 TO SUBPART UUU OF PART 63—REQUIREMENTS FOR PERFORMANCE TESTS FOR HAP EMISSIONS FROM SULFUR RECOVERY UNITS NOT SUBJECT TO THE NEW SOURCE PERFORMANCE STANDARDS FOR SULFUR OXIDES—Continued

For . . .	You must . . .	Using . . .	According to these requirements . . .
	i. Measure thermal incinerator: combustion zone temperature.	Data from the continuous parameter monitoring system.	Collect temperature monitoring data every 15 minutes during the entire period of the performance test; and determine and record the minimum hourly average temperature from all the readings.
	j. Measure thermal incinerator: oxygen concentration (percent, dry basis) in the vent stream.	Data from the continuous parameter monitoring system.	Collect oxygen concentration (percent, dry basis) data every 15 minutes during the entire period of the performance test; and determine and record the minimum hourly average percent excess oxygen concentration.

■ 81. Table 33 to subpart UUU of part 63 is revised to read as follows:

As stated in § 63.1568(b)(5), you shall meet each requirement in the following table that applies to you.

TABLE 33 TO SUBPART UUU OF PART 63—INITIAL COMPLIANCE WITH HAP EMISSION LIMITS FOR SULFUR RECOVERY UNITS

For . . .	For the following emission limit . . .	You have demonstrated initial compliance if . . .
1. Each new or existing Claus sulfur recovery unit part of a sulfur recovery plant with design capacity greater than 20 long tons per day and subject to the NSPS for sulfur oxides in 40 CFR 60.104(a)(2) or in 40 CFR 60.102a(f)(1).	a. 250 ppmv (dry basis) SO_2 at zero percent excess air, or concentration determined using Equation 1 of 40 CFR 60.102a(f)(1)(i), if you use an oxidation or reduction control system followed by incineration.	You have already conducted a performance test to demonstrate initial compliance with the NSPS and each 12-hour rolling average concentration of SO_2 emissions measured by the continuous emission monitoring system is less than or equal to 250 ppmv (dry basis) at zero percent excess air, or the concentration determined using Equation 1 of 40 CFR 60.102a(f)(1)(i). As part of the Notification of Compliance Status, you must certify that your vent meets the SO_2 limit. You are not required to do another performance test to demonstrate initial compliance. You have already conducted a performance evaluation to demonstrate initial compliance with the applicable performance specification. As part of your Notification of Compliance Status, you must certify that your continuous emission monitoring system meets the applicable requirements in § 63.1572. You are not required to do another performance evaluation to demonstrate initial compliance.
	b. 300 ppmv of reduced sulfur compounds calculated as ppmv SO_2 (dry basis) at zero percent excess air, or concentration determined using Equation 1 of 40 CFR 60.102a(f)(1)(i), if you use a reduction control system without incineration.	You have already conducted a performance test to demonstrate initial compliance with the NSPS and each 12-hour rolling average concentration of reduced sulfur compounds measured by your continuous emission monitoring system is less than or equal to 300 ppmv, calculated as ppmv SO_2 (dry basis) at zero percent excess air, or the concentration determined using Equation 1 of 40 CFR 60.102a(f)(1)(i). As part of the Notification of Compliance Status, you must certify that your vent meets the SO_2 limit. You are not required to do another performance test to demonstrate initial compliance. You have already conducted a performance evaluation to demonstrate initial compliance with the applicable performance specification. As part of your Notification of Compliance Status, you must certify that your continuous emission monitoring system meets the applicable requirements in § 63.1572. You are not required to do another performance evaluation to demonstrate initial compliance.
2. Option 1: Elect NSPS. Each new or existing sulfur recovery unit (Claus or other type, regardless of size) not subject to the NSPS for sulfur oxides in 40 CFR 60.104(a)(2) or in 40 CFR 60.102a(f)(1).	a. 250 ppmv (dry basis) of SO_2 at zero percent excess air, or concentration determined using Equation 1 of 40 CFR 60.102a(f)(1)(i), if you use an oxidation or reduction control system followed by incineration.	Each 12-hour rolling average concentration of SO_2 emissions measured by the continuous emission monitoring system during the initial performance test is less than or equal to 250 ppmv (dry basis) at zero percent excess air, or the concentration determined using Equation 1 of 40 CFR 60.102a(f)(1)(i); and your performance evaluation shows the monitoring system meets the applicable requirements in § 63.1572.

TABLE 33 TO SUBPART UUU OF PART 63—INITIAL COMPLIANCE WITH HAP EMISSION LIMITS FOR SULFUR RECOVERY UNITS—Continued

For . . .	For the following emission limit . . .	You have demonstrated initial compliance if . . .
	b. 300 ppmv of reduced sulfur compounds calculated as ppmv SO_2 (dry basis) at zero percent excess air, or concentration determined using Equation 1 of 40 CFR 60.102a(f)(1)(i), if you use a reduction control system without incineration.	Each 12-hour rolling average concentration of reduced sulfur compounds measured by the continuous emission monitoring system during the initial performance test is less than or equal to 300 ppmv, calculated as ppmv SO_2 (dry basis) at zero percent excess air, or the concentration determined using Equation 1 of 40 CFR 60.102a(f)(1)(i); and your performance evaluation shows the continuous emission monitoring system meets the applicable requirements in § 63.1572.
3. Option 2: TRS limit. Each new or existing sulfur recovery unit (Claus or other type, regardless of size) not subject to the NSPS for sulfur oxides in 40 CFR 60.104(a)(2) or in 40 CFR 60.102a(f)(1).	300 ppmv of TRS compounds expressed as an equivalent SO_2 concentration (dry basis) at zero percent oxygen.	If you use continuous parameter monitoring systems, the average concentration of TRS emissions measured using Method 15 during the initial performance test is less than or equal to 300 ppmv expressed as equivalent SO_2 concentration (dry basis) at zero percent oxygen. If you use a continuous emission monitoring system, each 12-hour rolling average concentration of TRS emissions measured by the continuous emission monitoring system during the initial performance test is less than or equal to 300 ppmv expressed as an equivalent SO_2 (dry basis) at zero percent oxygen; and your performance evaluation shows the continuous emission monitoring system meets the applicable requirements in § 63.1572.

■ 82. Table 34 to subpart UUU of part 63 is revised to read as follows:

As stated in § 63.1568(c)(1), you shall meet each requirement in the following table that applies to you.

TABLE 34 TO SUBPART UUU OF PART 63—CONTINUOUS COMPLIANCE WITH HAP EMISSION LIMITS FOR SULFUR RECOVERY UNITS

For . . .	For this emission limit . . .	You shall demonstrate continuous compliance by . . .
1. Each new or existing Claus sulfur recovery unit part of a sulfur recovery plant with design capacity greater than 20 long tons per day and subject to the NSPS for sulfur oxides in 40 CFR 60.104(a)(2) or in 40 CFR 60.102a(f)(1).	a. 250 ppmv (dry basis) of SO_2 at zero percent excess air, or concentration determined using Equation 1 of 40 CFR 60.102a(f)(1)(i), if you use an oxidation or reduction control system followed by incineration.	Collecting the hourly average SO_2 monitoring data (dry basis, percent excess air) according to § 63.1572; determining and recording each 12-hour rolling average concentration of SO_2; maintaining each 12-hour rolling average concentration of SO_2 at or below the applicable emission limitation; and reporting any 12-hour rolling average concentration of SO_2 greater than the applicable emission limitation in the semiannual compliance report required by § 63.1575.
	b. 300 ppmv of reduced sulfur compounds calculated as ppmv SO_2 (dry basis) at zero percent excess air, or concentration determined using Equation 1 of 40 CFR 60.102a(f)(1)(i), if you use a reduction control system without incineration.	Collecting the hourly average reduced sulfur (and air or O_2 dilution and oxidation) monitoring data according to § 63.1572; determining and recording each 12-hour rolling average concentration of reduced sulfur; maintaining each 12-hour rolling average concentration of reduced sulfur at or below the applicable emission limitation; and reporting any 12-hour rolling average concentration of reduced sulfur greater than the applicable emission limitation in the semiannual compliance report required by § 63.1575.
2. Option 1: Elect NSPS. Each new or existing sulfur recovery unit (Claus or other type, regardless of size) not subject to the NSPS for sulfur oxides in 40 CFR 60.104(a)(2) or in 40 CFR 60.102a(f)(1).	a. 250 ppmv (dry basis) of SO_2 at zero percent excess air, or concentration determined using Equation 1 of 40 CFR 60.102a(f)(1)(i), if you use an oxidation or reduction control system followed by incineration.	Collecting the hourly average SO_2 data (dry basis, percent excess air) according to § 63.1572; determining and recording each 12-hour rolling average concentration of SO_2; maintaining each 12-hour rolling average concentration of SO_2 at or below the applicable emission limitation; and reporting any 12-hour rolling average concentration of SO_2 greater than the applicable emission limitation in the semiannual compliance report required by § 63.1575.
	b. 300 ppmv of reduced sulfur compounds calculated as ppmv SO_2 (dry basis) at zero percent excess air, or concentration determined using Equation 1 of 40 CFR 60.102a(f)(1)(i), if you use a reduction control system without incineration.	Collecting the hourly average reduced sulfur (and air or O_2 dilution and oxidation) monitoring data according to § 63.1572; determining and recording each 12-hour rolling average concentration of reduced sulfur; maintaining each 12-hour rolling average concentration of reduced sulfur at or below the applicable emission limitation; and reporting any 12-hour rolling average concentration of reduced sulfur greater than the applicable emission limitation in the semiannual compliance report required by § 63.1575.
3. Option 2: TRS limit. Each new or existing sulfur recovery unit (Claus or other type, regardless of size) not subject to the NSPS for sulfur oxides in 40 CFR 60.104(a)(2) or in 40 CFR 60.102a(f)(1).	300 ppmv of TRS compounds, expressed as an SO_2 concentration (dry basis) at zero percent oxygen or reduced sulfur compounds calculated as ppmv SO_2 (dry basis) at zero percent excess air.	i. If you use continuous parameter monitoring systems, collecting the hourly average TRS monitoring data according to § 63.1572 and maintaining each 12-hour average concentration of TRS at or below the applicable emission limitation; or

TABLE 34 TO SUBPART UUU OF PART 63—CONTINUOUS COMPLIANCE WITH HAP EMISSION LIMITS FOR SULFUR RECOVERY UNITS—Continued

For . . .	For this emission limit . . .	You shall demonstrate continuous compliance by . . .
		ii. If you use a continuous emission monitoring system, collecting the hourly average TRS monitoring data according to § 63.1572, determining and recording each 12-hour rolling average concentration of TRS; maintaining each 12-hour rolling average concentration of TRS at or below the applicable emission limitation; and reporting any 12-hour rolling average TRS concentration greater than the applicable emission limitation in the semiannual compliance report required by § 63.1575.

■ 83. Table 35 to subpart UUU of part 63 is revised to read as follows:

As stated in § 63.1568(c)(1), you shall meet each requirement in the following table that applies to you.

TABLE 35 TO SUBPART UUU OF PART 63—CONTINUOUS COMPLIANCE WITH OPERATING LIMITS FOR HAP EMISSIONS FROM SULFUR RECOVERY UNITS

For . . .	For this operating limit . . .	You shall demonstrate continuous compliance by . . .
1. Each new or existing Claus sulfur recovery unit part of a sulfur recovery plant with design capacity greater than 20 long tons per day and subject to the NSPS for sulfur oxides in paragraph 40 CFR 60.104(a)(2) or in 40 CFR 60.102a(f)(1).	Not applicable	Meeting the requirements of Table 34 of this subpart.
2. Option 1: Elect NSPS. Each new or existing sulfur recovery unit (Claus or other type, regardless of size) not subject to the NSPS for sulfur oxides in 40 CFR 60.104(a)(2) or in 40 CFR 60.102a(f)(1).	Not applicable	Meeting the requirements of Table 34 of this subpart.
3. Option 2: TRS limit. Each new or existing sulfur recovery unit (Claus or other type, regardless of size) not subject to the NSPS for sulfur oxides in 40 CFR 60.104(a)(2) or in 40 CFR 60.102a(f)(1).	a. Maintain the daily average combustion zone temperature above the level established during the performance test.	Collecting the hourly and daily average temperature monitoring data according to § 63.1572; and maintaining the daily average combustion zone temperature at or above the limit established during the performance test.
	b. The daily average oxygen concentration in the vent stream (percent, dry basis) must not fall below the level established during the performance test.	Collecting the hourly and daily average O_2 monitoring data according to § 63.1572; and maintaining the average O_2 concentration above the level established during the performance test.

■ 84. Table 40 to subpart UUU of part 63 is revised to read as follows:

As stated in § 63.1572(a)(1) and (b)(1), you shall meet each requirement in the following table that applies to you.

TABLE 40 TO SUBPART UUU OF PART 63—REQUIREMENTS FOR INSTALLATION, OPERATION, AND MAINTENANCE OF CONTINUOUS OPACITY MONITORING SYSTEMS AND CONTINUOUS EMISSION MONITORING SYSTEMS

This type of continuous opacity or emission monitoring system . . .	Must meet these requirements . . .
1. Continuous opacity monitoring system	Performance specification 1 (40 CFR part 60, Appendix B).
2. PM CEMS; this monitor must include an O_2 monitor for correcting the data for excess air.	The requirements in 40 CFR 60.105a(d).
3. CO_2, O_2, and CO monitors for coke burn-off rate.	The requirements in 40 CFR 60.105a(b)(2).
4. CO continuous emission monitoring system	Performance specification 4 (40 CFR part 60, Appendix B); span value of 1,000 ppm; and procedure 1 (40 CFR part 60, Appendix F) except relative accuracy test audits are required annually instead of quarterly.

TABLE 40 TO SUBPART UUU OF PART 63—REQUIREMENTS FOR INSTALLATION, OPERATION, AND MAINTENANCE OF CONTINUOUS OPACITY MONITORING SYSTEMS AND CONTINUOUS EMISSION MONITORING SYSTEMS—Continued

This type of continuous opacity or emission monitoring system . . .	Must meet these requirements . . .
5. CO continuous emission monitoring system used to demonstrate emissions average under 50 ppm (dry basis).	Performance specification 4 (40 CFR part 60, Appendix B); and span value of 100 ppm.
6. SO_2 continuous emission monitoring system for sulfur recovery unit with oxidation control system or reduction control system; this monitor must include an O_2 monitor for correcting the data for excess air.	Performance specification 2 (40 CFR part 60, Appendix B); span value of 500 ppm SO_2, or if using Equation 1 of 40 CFR 60.102a(f)(1)(i), span value of two times the limit at the highest O_2 concentration; use Methods 6 or 6C (40 CFR part 60, Appendix A–4) for certifying the SO_2 monitor and Methods 3A or 3B (40 CFR part 60, Appendix A–2) for certifying the O_2 monitor; and procedure 1 (40 CFR part 60, Appendix F) except relative accuracy test audits are required annually instead of quarterly.
7. Reduced sulfur and O_2 continuous emission monitoring system for sulfur recovery unit with reduction control system not followed by incineration; this monitor must include an O_2 monitor for correcting the data for excess air unless exempted.	Performance specification 5 (40 CFR part 60, Appendix B), except calibration drift specification is 2.5 percent of the span value instead of 5 percent; span value is 450 ppm reduced sulfur, or if using Equation 1 of 40 CFR 60.102a(f)(1)(i), span value of two times the limit at the highest O_2 concentration; use Methods 15 or 15A (40 CFR part 60, Appendix A–5) for certifying the reduced sulfur monitor and Methods 3A or 3B (40 CFR part 60, Appendix A–2) for certifying the O_2 monitor; if Method 3A or 3B yields O_2 concentrations below 0.25 percent during the performance evaluation, the O_2 concentration can be assumed to be zero and the O_2 monitor is not required; and procedure 1 (40 CFR part 60, Appendix F), except relative accuracy test audits, are required annually instead of quarterly.
8. Instrument with an air or O_2 dilution and oxidation system to convert reduced sulfur to SO_2 for continuously monitoring the concentration of SO_2 instead of reduced sulfur monitor and O_2 monitor.	Performance specification 5 (40 CFR part 60, Appendix B); span value of 375 ppm SO_2 or if using Equation 1 of 40 CFR 60.102a(f)(1)(i), span value of two times the limit at the highest O_2 concentration; use Methods 15 or 15A for certifying the reduced sulfur monitor and 3A or 3B for certifying the O_2 monitor; and procedure 1 (40 CFR part 60, Appendix F), except relative accuracy test audits, are required annually instead of quarterly.
9. TRS continuous emission monitoring system for sulfur recovery unit; this monitor must include an O_2 monitor for correcting the data for excess air.	Performance specification 5 (40 CFR part 60, Appendix B).
10. O_2 monitor for oxygen concentration	If necessary due to interferences, locate the oxygen sensor prior to the introduction of any outside gas stream; performance specification 3 (40 CFR part 60, Appendix B; and procedure 1 (40 CFR part 60, Appendix F), except relative accuracy test audits, are required annually instead of quarterly.
11. O_2 monitor for oxygen concentration in inlet or supply.	Install, operate, and maintain each O_2 monitor according to Performance Specification 3 of Appendix B to part 60; the span value for the O_2 monitor must be selected between 20 and 100 percent; conduct performance evaluations for O_2 monitor according to Performance Specification 3 of Appendix B to part 60, and must use Method 3A or 3B of Appendix A–2 to part 60 for conducting relative accuracy evaluations; comply with applicable quality assurance procedures of Appendix F to part 60 for each monitor, including annual accuracy determinations for each O_2 monitor and daily calibration drift determinations.

■ 85. Table 41 to subpart UUU of part 63 is revised to read as follows:

As stated in § 63.1572(c)(1), you shall meet each requirement in the following table that applies to you.

TABLE 41 TO SUBPART UUU OF PART 63—REQUIREMENTS FOR INSTALLATION, OPERATION, AND MAINTENANCE OF CONTINUOUS PARAMETER MONITORING SYSTEMS

If you use . . .	You shall . . .
1. pH strips	Use pH strips with an accuracy of ±10 percent.
2. pH meter	Locate the pH sensor in a position that provides a representative measurement of pH; ensure the sample is properly mixed and representative of the fluid to be measured. Use a pH sensor with an accuracy of at least ±0.2 pH units. Check the pH meter's calibration on at least one point at least once daily; check the pH meter's calibration on at least two points at least once quarterly; at least monthly, inspect all components for integrity and all electrical components for continuity; record the results of each calibration check and inspection.
3. Colormetric tube sampling system.	Use a colormetric tube sampling system with a printed numerical scale in ppmv, a standard measurement range of 1 to 10 ppmv (or 1 to 30 ppmv if applicable), and a standard deviation for measured values of no more than ±15 percent. System must include a gas detection pump and hot air probe if needed for the measurement range.
4. BLD	Follow the requirements in 40 CFR 60.105a(c).
5. Voltage, secondary current, or total power input sensors.	Use meters with an accuracy of at least ± 5 percent over the operating range. Each time that the unit is not operating, confirm that the meters read zero. Conduct a calibration check at least annually; conduct calibration checks following any period of more than 24 hours throughout which the meter exceeds the manufacturer's specified maximum operating range; at least monthly, inspect all components of the continuous parameter monitoring system for integrity and all electrical connections for continuity; and record the results of each calibration check and inspection.

TABLE 41 TO SUBPART UUU OF PART 63—REQUIREMENTS FOR INSTALLATION, OPERATION, AND MAINTENANCE OF CONTINUOUS PARAMETER MONITORING SYSTEMS—Continued

If you use . . .	You shall . . .
6. Pressure/Pressure drop[1] sensors.	Locate the pressure sensor(s) in a position that provides a representative measurement of the pressure; minimizes or eliminates pulsating pressure, vibration, and internal and external corrosion. Use a gauge with an accuracy of at least ± 5 percent over the operating range or 0.5 inches of water column, whichever is greater. Check pressure tap for plugs at least once a week; using a manometer, check gauge calibration quarterly and transducer calibration monthly; conduct calibration checks following any period of more than 24 hours throughout which the sensor exceeds the manufacturer's specified maximum operating pressure range or install a new pressure sensor; at least monthly, inspect all components for integrity, all electrical connections for continuity, and all mechanical connections for leakage; record the results of each calibration check and inspection.
7. Air flow rate, gas flow rate, or total water (or scrubbing liquid) flow rate sensors.	Locate the flow sensor(s) and other necessary equipment (such as straightening vanes) in a position that provides representative flow; reduce swirling flow or abnormal velocity distributions due to upstream and downstream disturbances. If you elect to comply with Option 3 (Ni lb/hr) or Option 4 (Ni lb/1,000 lb of coke burn-off) for the HAP metal emission limitations in § 63.1564, install the continuous parameter monitoring system for gas flow rate as close as practical to the continuous opacity monitoring system; and if you don't use a continuous opacity monitoring system, install the continuous parameter monitoring system for gas flow rate as close as practical to the control device. Use a flow rate sensor with an accuracy of at least ±5 percent, or 0.5 gallons per minute for liquid flow, or 10 cubic feet per minute for gas flow, whichever is greater. Conduct a flow sensor calibration check at least semiannually; conduct calibration checks following any period of more than 24 hours throughout which the sensor exceeds the manufacturer's specified maximum operating range or install a new flow sensor; at least monthly, inspect all components for leakage; record the results of each calibration check and inspection.
8. Temperature sensors	Locate the temperature sensor in the combustion zone, or in the ductwork immediately downstream of the combustion zone before any substantial heat exchange occurs or in the ductwork immediately downstream of the regenerator; locate the temperature sensor in a position that provides a representative temperature; shield the temperature sensor system from electromagnetic interference and chemical contaminants. Use a temperature sensor with an accuracy of at least ±1 percent of the temperature being measured, expressed in degrees Celsius (C) or 2.8 degrees C, whichever is greater. Conduct calibration checks at least annually; conduct calibration checks following any period of more than 24 hours throughout which the sensor exceeds the manufacturer's specified maximum operating temperature range, or install a new temperature sensor; at least monthly, inspect all components for integrity and all electrical connections for continuity, oxidation, and galvanic corrosion; record the results of each calibration check and inspection.
9. Oxygen content sensors[2]	Locate the oxygen sensor so that it provides a representative measurement of the oxygen content of the exit gas stream; ensure the sample is properly mixed and representative of the gas to be measured. Use an oxygen sensor with an accuracy of at least ±1 percent of the range of the sensor. Conduct calibration checks at least quarterly; conduct calibration checks following any period of more than 24 hours throughout which the sensor exceeds the manufacturer's specified maximum operating range, or install a new oxygen sensor; at least monthly, inspect all components for integrity and all electrical connections for continuity; record the results of each calibration and inspection.

[1] Not applicable to non-venturi wet scrubbers of the jet-ejector design.
[2] This does not replace the requirements for oxygen monitors that are required to use continuous emissions monitoring systems. These requirements apply to oxygen sensors that are continuous parameter monitors, such as those that monitor combustion zone oxygen concentration and regenerator exit oxygen concentration.

■ 86. Table 43 to subpart UUU is revised to read as follows:

As stated in § 63.1575(a), you shall meet each requirement in the following table that applies to you.

TABLE 43 TO SUBPART UUU OF PART 63—REQUIREMENTS FOR REPORTS

You must submit . . .	The report must contain . . .	You shall submit the report . . .
1. A compliance report	If there are not deviations from any emission limitation or work practice standard that applies to you, a statement that there were no deviations from the standards during the reporting period and that no continuous opacity monitoring system or continuous emission monitoring system was inoperative, inactive, out-of-control, repaired, or adjusted; if you have a deviation from any emission limitation or work practice standard during the reporting period, the report must contain the information in § 63.1575(c) through (e).	Semiannually according to the requirements in § 63.1575(b).
2. Performance test and CEMS performance evaluation data.	On and after [THE DATE 3 YEARS AFTER THE DATE OF PUBLICATION OF THE FINAL RULE AMENDMENTS IN THE **FEDERAL REGISTER**], the information specified in § 63.1575(k)(1).	Within 60 days after the date of completing each test according to the requirements in § 63.1575(k).

■ 87. Table 44 to subpart UUU of part 63 is revised to read as follows:

As stated in § 63.1577, you shall meet each requirement in the following table that applies to you.

TABLE 44 TO SUBPART UUU OF PART 63—APPLICABILITY OF NESHAP GENERAL PROVISIONS TO SUBPART UUU

Citation	Subject	Applies to subpart UUU	Explanation
§ 63.1(a)(1)–(4)	General Applicability	Yes.	
§ 63.1(a)(5)	[Reserved]	Not applicable	
§ 63.1(a)(6)		Yes	Except the correct mail drop (MD) number is C404–04.
§ 63.1(a)(7)–(9)	[Reserved]	Not applicable	
§ 63.1(a)(10)–(12)		Yes	Except that subpart UUU specifies calendar or operating day.
§ 63.1(b)(1)	Initial Applicability Determination for this part.	Yes	
§ 63.1(b)(2)	[Reserved]	Not applicable	
§ 63.1(b)(3)		Yes	
§ 63.1(c)(1)	Applicability of this part after a Relevant Standard has been set under this part.	Yes	
§ 63.1(c)(2)		No	Area sources are not subject to subpart UUU.
§ 63.1(c)(3)–(4)	[Reserved]	Not applicable	
§ 63.1(c)(5)		Yes	
§ 63.1(d)	[Reserved]	Not applicable	
§ 63.1(e)	Applicability of Permit Program.	Yes	
§ 63.2	Definitions	Yes	§ 63.1579 of subpart UUU specifies that if the same term is defined in subparts A and UUU, it shall have the meaning given in subpart UUU.
§ 63.3	Units and Abbreviations	Yes	
§ 63.4(a)(1)–(2)	Prohibited Activities	Yes	
§ 63.4(a)(3)–(5)	[Reserved]	Not applicable	
§ 63.4(b)–(c)	Circumvention and Fragmentation.	Yes	
§ 63.5(a)	Construction and Reconstruction	Yes	
§ 63.5(b)(1)		Yes	
§ 63.5(b)(2)	[Reserved]	Not applicable	
§ 63.5(b)(3)–(4)		Yes	In § 63.5(b)(4), replace the reference to § 63.9(b) with § 63.9(b)(4) and (5).
§ 63.5(b)(5)	[Reserved]	Not applicable	
§ 63.5(b)(6)		Yes	
§ 63.5(c)	[Reserved]	Not applicable	
§ 63.5(d)(1)(i)	Application for Approval of Construction or Reconstruction—General Application Requirements.	Yes	Except subpart UUU specifies the application is submitted as soon as practicable before startup but not later than 90 days after the promulgation date if construction or reconstruction had commenced and initial startup had not occurred before promulgation.
§ 63.5(d)(1)(ii)		Yes	Except that emission estimates specified in § 63.5(d)(1)(ii)(H) are not required, and § 63.5(d)(1)(ii)(G) and (I) are Reserved and do not apply.
§ 63.5(d)(1)(iii)		No	Subpart UUU specifies submission of notification of compliance status.
§ 63.5(d)(2)		Yes	
§ 63.5(d)(3)		Yes	
§ 63.5(d)(4)		Yes	
§ 63.5(e)	Approval of Construction or Reconstruction.	Yes	
§ 63.5(f)(1)	Approval of Construction or Reconstruction Based on State Review.	Yes	
§ 63.5(f)(2)		Yes	Except that the cross-reference to § 63.9(b)(2) does not apply.
§ 63.6(a)	Compliance with Standards and Maintenance—Applicability.	Yes	
§ 63.6(b)(1)–(4)	Compliance Dates for New and Reconstructed Sources.	Yes	
§ 63.6(b)(5)		Yes	Except that subpart UUU specifies different compliance dates for sources.
§ 63.6(b)(6)	[Reserved]	Not applicable	

TABLE 44 TO SUBPART UUU OF PART 63—APPLICABILITY OF NESHAP GENERAL PROVISIONS TO SUBPART UUU—Continued

Citation	Subject	Applies to subpart UUU	Explanation
§ 63.6(b)(7)	Compliance Dates for New and Reconstructed Area Sources That Become Major.	Yes	
§ 63.6(c)(1)–(2)	Compliance Dates for Existing Sources.	Yes	Except that subpart UUU specifies different compliance dates for sources subject to Tier II gasoline sulfur control requirements.
§ 63.6(c)(3)–(4)	[Reserved]	Not applicable	
§ 63.6(c)(5)	Compliance Dates for Existing Area Sources That Become Major.	Yes	
§ 63.6(d)	[Reserved]	Not applicable	
§ 63.6(e)(1)(i)	General Duty to Minimize Emissions.	No	See § 63.1570(c) for general duty requirement.
§ 63.6(e)(1)(ii)	Requirement to Correct Malfunctions as Soon as Possible.	No	
§ 63.6(e)(1)(iii)	Compliance with Standards and Maintenance Requirements.	Yes	
§ 63.6(e)(2)	[Reserved]	Not applicable	
§ 63.6(e)(3)(i)	Startup, Shutdown, and Malfunction Plan Requirements.	No	
§ 63.6(e)(3)(ii)	[Reserved]	Not applicable	
§ 63.6(e)(3)(iii)–(ix)		No	
§ 63.6(f)(1)	SSM Exemption	No	
§ 63.6(f)(2)(i)–(iii)(C)	Compliance with Standards and Maintenance Requirements.	Yes	
§ 63.6(f)(2)(iii)(D)		Yes	
§ 63.6(f)(2)(iv)–(v)		Yes	
§ 63.6(f)(3)		Yes	Except the cross-references to § 63.6(f)(1) and § 63.6(e)(1)(i) are changed to § 63.1570(c).
§ 63.6(g)	Alternative Standard	Yes	
§ 63.6(h)(1)	SSM Exemption for Opacity/VE Standards.	No	
§ 63.6(h)(2)(i)	Determining Compliance with Opacity/VE Standards.	No	Subpart UUU specifies methods.
§ 63.6(h)(2)(ii)	[Reserved]	Not applicable	
§ 63.6(h)(2)(iii)		Yes	
§ 63.6(h)(3)	[Reserved]	Not applicable	
§ 63.6(h)(4)	Notification of Opacity/VE Observation Date.	Yes	Applies to Method 22 tests.
§ 63.6(h)(5)	Conducting Opacity/VE Observations.	No	
§ 63.6(h)(6)	Records of Conditions During Opacity/VE Observations.	Yes	Applies to Method 22 observations.
§ 63.6(h)(7)(i)	Report COM Monitoring Data from Performance Test.	Yes	
§ 63.6(h)(7)(ii)	Using COM Instead of Method 9.	No	
§ 63.6(h)(7)(iii)	Averaging Time for COM during Performance Test.	Yes	
§ 63.6(h)(7)(iv)	COM Requirements	Yes	
§ 63.6(h)(7)(v)	COMS Results and Visual Observations.	Yes	
§ 63.6(h)(8)	Determining Compliance with Opacity/VE Standards.	Yes	
§ 63.6(h)(9)	Adjusted Opacity Standard	Yes	
§ 63.6(i)(1)–(14)	Extension of Compliance	Yes	Extension of compliance under § 63.6(i)(4) not applicable to a facility that installs catalytic cracking feed hydrotreating and receives an extended compliance date under § 63.1563(c).
§ 63.6(i)(15)	[Reserved]	Not applicable	
§ 63.6(i)(16)		Yes	

TABLE 44 TO SUBPART UUU OF PART 63—APPLICABILITY OF NESHAP GENERAL PROVISIONS TO SUBPART UUU—Continued

Citation	Subject	Applies to subpart UUU	Explanation
§ 63.6(j)	Presidential Compliance Exemption.	Yes	
§ 63.7(a)(1)	Performance Test Requirements Applicability.	Yes	Except that subpart UUU specifies the applicable test and demonstration procedures.
§ 63.7(a)(2)	Performance Test Dates	Yes	Except test results must be submitted in the Notification of Compliance Status report due 150 days after the compliance date.
§ 63.7(a)(3)	Section 114 Authority	Yes	
§ 63.7(a)(4)	Force Majeure	Yes	
§ 63.7(b)	Notifications	Yes	Except that subpart UUU specifies notification at least 30 days prior to the scheduled test date rather than 60 days.
§ 63.7(c)	Quality Assurance Program/Site-Specific Test Plan.	Yes	
§ 63.7(d)	Performance Test Facilities	Yes	
§ 63.7(e)(1)	Performance Testing	No	See § 63.1571(b)(1).
§ 63.7(e)(2)–(4)	Conduct of Tests	Yes	
§ 63.7(f)	Alternative Test Method	Yes	
§ 63.7(g)	Data Analysis, Recordkeeping, Reporting.	Yes	Except performance test reports must be submitted with notification of compliance status due 150 days after the compliance date, and § 63.7(g)(2) is Reserved and does not apply.
§ 63.7(h)	Waiver of Tests	Yes	
§ 63.8(a)(1)	Monitoring Requirements—Applicability.	Yes	
§ 63.8(a)(2)	Performance Specifications	Yes	
§ 63.8(a)(3)	[Reserved]	Not applicable	
§ 63.8(a)(4)	Monitoring with Flares	Yes	Except that for a flare complying with § 63.670, the cross-reference to § 63.11 in this paragraph does not include § 63.11(b).
§ 63.8(b)(1)	Conduct of Monitoring	Yes	
§ 63.8(b)(2)–(3)	Multiple Effluents and Multiple Monitoring Systems.	Yes	Subpart UUU specifies the required monitoring locations.
§ 63.8(c)(1)	Monitoring System Operation and Maintenance.	Yes	
§ 63.8(c)(1)(i)	General Duty to Minimize Emissions and CMS Operation.	No	See § 63.1570(c).
§ 63.8(c)(1)(ii)	Keep Necessary Parts for CMS.	Yes	
§ 63.8(c)(1)(iii)	Requirement to Develop SSM Plan for CMS.	No	
§ 63.8(c)(2)–(3)	Monitoring System Installation.	Yes	Except that subpart UUU specifies that for continuous parameter monitoring systems, operational status verification includes completion of manufacturer written specifications or installation, operation, and calibration of the system or other written procedures that provide adequate assurance that the equipment will monitor accurately.
§ 63.8(c)(4)	Continuous Monitoring System Requirements.	Yes	
§ 63.8(c)(5)	COMS Minimum Procedures.	Yes	
§ 63.8(c)(6)	CMS Requirements	Yes	
§ 63.8(c)(7)–(8)	CMS Requirements	Yes	
§ 63.8(d)(1)–(2)	Quality Control Program for CMS.	Yes	
§ 63.8(d)(3)	Written Procedures for CMS.	No	
§ 63.8(e)	CMS Performance Evaluation.	Yes	Except that results are to be submitted as part of the Notification Compliance Status due 150 days after the compliance date.
§ 63.8(f)(1)–(5)	Alternative Monitoring Methods.	Yes	Except that subpart UUU specifies procedures for requesting alternative monitoring systems and alternative parameters.
§ 63.8(f)(6)	Alternative to Relative Accuracy Test.	Yes	Applicable to continuous emission monitoring systems if performance specification requires a relative accuracy test audit.
§ 63.8(g)(1)–(4)	Reduction of Monitoring Data.	Yes	Applies to continuous opacity monitoring system or continuous emission monitoring system.

TABLE 44 TO SUBPART UUU OF PART 63—APPLICABILITY OF NESHAP GENERAL PROVISIONS TO SUBPART UUU—Continued

Citation	Subject	Applies to subpart UUU	Explanation
§ 63.8(g)(5)	Data Reduction	No	Subpart UUU specifies requirements.
§ 63.9(a)	Notification Requirements—Applicability.	Yes	Duplicate Notification of Compliance Status report to the Regional Administrator may be required.
§ 63.9(b)(1)–(2)	Initial Notifications	Yes	Except that notification of construction or reconstruction is to be submitted as soon as practicable before startup but no later than 30 days after the effective date if construction or reconstruction had commenced but startup had not occurred before the effective date.
§ 63.9(b)(3)	[Reserved]	Not applicable	
§ 63.9(b)(4)–(5)	Initial Notification Information.	Yes	Except § 63.9(b)(4)(ii)–(iv), which are Reserved and do not apply.
§ 63.9(c)	Request for Extension of Compliance.	Yes	
§ 63.9(d)	New Source Notification for Special Compliance Requirements.	Yes	
§ 63.9(e)	Notification of Performance Test.	Yes	Except that notification is required at least 30 days before test.
§ 63.9(f)	Notification of VE/Opacity Test.	Yes	
§ 63.9(g)	Additional Notification Requirements for Sources with Continuous Monitoring Systems.	Yes	
§ 63.9(h)	Notification of Compliance Status.	Yes	Except that subpart UUU specifies the notification is due no later than 150 days after compliance date, and except that the reference to § 63.5(d)(1)(ii)(H) in § 63.9(h)(5) does not apply.
§ 63.9(i)	Adjustment of Deadlines	Yes	
§ 63.9(j)	Change in Previous Information.	Yes	
63.10(a)	Recordkeeping and Reporting Applicability.	Yes	
§ 63.10(b)(1)	General Recordkeeping Requirements.	Yes	
§ 63.10(b)(2)(i)	Recordkeeping of Occurrence and Duration of Startups and Shutdowns.	No	
§ 63.10(b)(2)(ii)	Recordkeeping of Malfunctions.	No	See § 63.1576(a)(2) for recordkeeping of (1) date, time and duration; (2) listing of affected source or equipment, and an estimate of the volume of each regulated pollutant emitted over the standard; and (3) actions taken to minimize emissions and correct the failure.
§ 63.10(b)(2)(iii)	Maintenance Records	Yes	
§ 63.10(b)(2)(iv)–(v)	Actions Taken to Minimize Emissions During SSM.	No	
§ 63.10(b)(2)(vi)	Recordkeeping for CMS Malfunctions.	Yes	
§ 63.10(b)(2)(vii)–(xiv)	Other CMS Requirements	Yes	
§ 63.10(b)(3)	Recordkeeping for Applicability Determinations..	Yes	
§ 63.10(c)(1)–(6)	Additional Records for Continuous Monitoring Systems.	Yes	Except § 63.10(c)(2)–(4), which are Reserved and do not apply.
§ 63.10(c)(7)–(8)	Additional Recordkeeping Requirements for CMS—Identifying Exceedances and Excess Emissions.	Yes	
§ 63.10(c)(9)	[Reserved]	Not applicable	
§ 63.10(c)(10)	Recording Nature and Cause of Malfunctions.	No	See § 63.1576(a)(2) for malfunctions recordkeeping requirements.
§ 63.10(c)(11)	Recording Corrective Actions.	No	See § 63.1576(a)(2) for malfunctions recordkeeping requirements.
§ 63.10(c)(12)–(14)	Additional CMS Recordkeeping Requirements.	Yes	
§ 63.10(c)(15)	Use of SSM Plan	No	
§ 63.10(d)(1)	General Reporting Requirements.	Yes	

TABLE 44 TO SUBPART UUU OF PART 63—APPLICABILITY OF NESHAP GENERAL PROVISIONS TO SUBPART UUU—Continued

Citation	Subject	Applies to subpart UUU	Explanation
§ 63.10(d)(2)	Performance Test Results	No	Subpart UUU requires performance test results to be reported as part of the Notification of Compliance Status due 150 days after the compliance date.
§ 63.10(d)(3)	Opacity or VE Observations.	Yes	
§ 63.10(d)(4)	Progress Reports	Yes	
§ 63.10(d)(5)	SSM Reports	No	See § 63.1575(d) for CPMS malfunction reporting and § 63.1575(e) for COMS and CEMS malfunction reporting.
§ 63.10(e)(1)–(2)	Additional CMS Reports	Yes	Except that reports of performance evaluations must be submitted in Notification of Compliance Status.
§ 63.10(e)(3)	Excess Emissions/CMS Performance Reports.	No	Subpart UUU specifies the applicable requirements.
§ 63.10(e)(4)	COMS Data Reports	Yes	
§ 63.10(f)	Recordkeeping/Reporting Waiver.	Yes	
§ 63.11(a)	Control Device and Work Practice Requirements—Applicability.	Yes	
§ 63.11(b)	Flares	Yes	Except that flares complying with § 63.670 are not subject to the requirements of § 63.11(b).
§ 63.11(c)-(e)	Alternative Work Practice for Monitoring Equipment for Leaks.	Yes	
§ 63.12	State Authority and Delegations.	Yes	
§ 63.13	Addresses	Yes	
§ 63.14	Incorporation by Reference	Yes	
§ 63.15	Availability of Information and Confidentiality.	Yes	
§ 63.16	Performance Track Provisions.	Yes	

■ 88. Appendix A to subpart UUU of part 63 is amended by:

■ a. Revising the first sentence of section 2.1; and

■ b. Revising section 7.1.3.

The revisions read as follows:

Appendix A to Subpart UUU of Part 63—Determination of Metal Concentration on Catalyst Particles (Instrumental Analyzer Procedure)

* * * * *

2.1 A representative sample of catalyst particles is collected, prepared, and analyzed for analyte concentration using either energy or wavelength dispersive X-ray fluorescent (XRF) spectrometry instrumental analyzers. * * *

* * * * *

7.1.3 Low-Range Calibration Standard. Concentration equivalent to 1 to 20 percent of the span. The concentration of the low-range calibration standard should be selected so that it is less than either one-fourth of the applicable concentration limit or of the lowest concentration anticipated in the catalyst samples.

* * * * *

Appendix A to Part 63—[AMENDED]

■ 89. Appendix A to part 63 is amended by adding Method 325A and Method 325B to read as follows:

Method 325A—Volatile Organic Compounds From Fugitive and Area Sources

Sampler Deployment and VOC Sample Collection

1.0 Scope and Application

1.1 This method describes collection of volatile organic compounds (VOCs) at a facility property boundary or from fugitive and area emission sources using passive (diffusive) tube samplers (PS). The concentration of airborne VOCs at or near these potential fugitive- or area-emission sources may be determined using this method in combination with Method 325B. Companion Method 325B (Sampler Preparation and Analysis) describes preparation of sampling tubes, shipment and storage of exposed sampling tubes, and analysis of sampling tubes collected using either this passive sampling procedure or alternative active (pumped) sampling methods.

1.2 This method may be used to determine the average concentration of the select VOCs and corresponding uptake rates listed in Method 325B, Table 12.1. Additional compounds or alternative sorbents must be evaluated as described in Addendum A of Method 325B unless the compound or sorbent has already been validated and reported in one of the following national/international standard methods: ISO 16017–2:2003 (incorporated by reference—see § 63.14), ASTM D6196–03(2009) (incorporated by reference—see § 63.14), or BS EN 14662–4:2005 (incorporated by reference—see § 63.14), or in the peer-reviewed open literature.

1.3 Methods 325A and 325B are valid for the measurement of benzene. Supporting literature (References 1–8) indicates that benzene can be measured by flame ionization detection or mass spectrometry over a concentration range of approximately 0.5 micrograms per cubic meter (μg/m^3) to at least 500 μg/m^3 when industry standard (3.5 inch long x 0.25 inch outside diameter (o.d.) x 5 mm inner diameter (i.d.)) stainless steel sorbent tubes packed with Carbograph 1 TD™, Carbopack B™, or Carbopack X® or equivalent are used and when samples are accumulated over a period of 14 days.

1.4 This method may be applied to screening average airborne VOC concentrations at facility property boundaries over an extended period of time using multiple sampling episodes (*e.g.,* 26 x 14-day sampling episodes). The duration of each sampling period must be 14 days.

1.5 This method requires the collection of local meteorological data (wind speed and direction, temperature, and barometric pressure). Although local meteorology is a component of this method, non-regulatory applications of this method may use regional meteorological data. Such applications risk that the results may not identify the precise source of the emissions.

2.0 Summary of the Method

2.1 *Principle of the Method.* The diffusive passive sampler collects VOC from air for a measured time period at a rate that is proportional to the concentration of vapor in the air at that location.

2.1.1 This method describes the deployment of prepared passive samplers, including determination of the number of passive samplers needed for each survey and placement of samplers along the fenceline or facility boundary depending on the size and shape of the site or linear length of the boundary.

2.1.2 The rate of sampling is specific to each compound and depends on the diffusion constants of that VOC and the sampler dimensions/characteristics as determined by prior calibration in a standard atmosphere (Reference 1).

2.1.3 The gaseous VOC target compounds migrate through a constant diffusion barrier (*e.g.,* an air gap of fixed dimensions) at the sampling end of the diffusion sampling tube and adsorb onto the sorbent.

2.1.4 Heat and a flow of inert carrier gas are then used to extract (desorb) the retained VOCs back from the sampling end of the tube and transport/transfer them to a gas chromatograph (GC) equipped with a chromatographic column to separate the VOCs and a detector to determine the quantity of target VOCs.

2.1.5 Gaseous or liquid calibration standards loaded onto the sampling ends of clean sorbent tubes must be used to calibrate the analytical equipment.

2.1.6 This method requires the use of field blanks to ensure sample integrity associated with shipment, collection, and storage of the passive samples. It also requires the use of field duplicates to validate the sampling process.

2.1.7 At the end of each sampling period, the passive samples are collected, sealed, and shipped to a laboratory for analysis of target VOCs by thermal desorption gas chromatography, as described in Method 325B.

2.2 *Application of Diffusive Sampling.*

2.2.1 This method requires deployment of passive sampling tubes on the facility fenceline or property boundaries and collection of local meteorological data. It may be used to determine average concentration of VOC at a facility fenceline or property boundaries using time integrated passive sampling (Reference 2).

2.2.2 Collecting samples and meteorological data at progressively higher frequencies may be employed to resolve shorter term concentration fluctuations and wind conditions that could introduce interfering emissions from other sources.

2.2.3 This passive sampling method provides a low cost approach to screening of fugitive or area emissions compared to active sampling methods that are based on pumped sorbent tubes or time weighted average canister sampling.

2.2.3.1 Additional passive sampling tubes may be deployed at different distances from the facility property boundary or from the geometric center of the fugitive emission source.

2.2.3.2 Additional meteorological measurements may also be collected as needed to perform preliminary gradient-based assessment of the extent of the pollution plume at ground level and the effect of ''background'' sources contributing to airborne VOC concentrations at the location.

2.2.4 Time-resolved concentration measurements coupled with time-resolved meteorological monitoring may be used to generate data needed for source apportionment procedures and mass flux calculations.

3.0 Definitions

(See also Section 3.0 of Method 325B.)

3.1 *Fenceline* means the property boundary of a facility.

3.2 *Passive sampler (PS)* means a specific type of sorbent tube (defined in this method) that has a fixed dimension air (diffusion) gap at the sampling end and is sealed at the other end.

3.3 *Passive sampling* refers to the activity of quantitatively collecting VOC on sorbent tubes using the process of diffusion.

3.4 PS_i is the annual average for all PS concentration results from location *i.*

3.5 PS_{i3} is the set of annual average concentration results for PS_i and two sorbent tubes nearest to the PS location *i.*

3.6 PS_{ip} is the concentration from the sorbent tube at location *i* for the test period or episode p.

3.7 *Retention volume* is the maximum mass of VOC that can be collected before the capacity of the sorbent is exceeded and back diffusion of the VOC from the tube occurs.

3.8 *Sampling episode* is the length of time each passive sampler is exposed during field monitoring. The sampling episode for this method is 14 days.

3.9 *Sorbent tube* (Also referred to as tube, PS tube, sorbent tube, and sampling tube) is a stainless steel or inert coated stainless steel tube. Standard PS tube dimensions for this method are 3.5-inch (89 mm) long x 0.25-inch (6.4 mm) o.d. stainless steel tubes with an i.d. of 5 mm, a cross-sectional area of 19.6 mm^2 and an air gap of 15 mm. The central portion of the tube is packed with solid adsorbent material contained between 2 x 100-mesh stainless steel gauzes and terminated with a diffusion cap at the sampling end of the tube. These axial passive samplers are installed under a protective hood during field deployment.

Note: Glass and glass- (or fused silica-) lined stainless steel sorbent tubes (typically 4 mm i.d.) are also available in various lengths to suit different makes of thermal desorption equipment, but these are rarely used for passive sampling because it is more difficult to adequately define the diffusive air gap in glass or glass-line tubing. Such tubes are not recommended for this method.

4.0 Sampling Interferences

4.1 *General Interferences.* Passive tube samplers should be sited at a distance beyond the influence of possible obstructions such as trees, walls, or buildings at the monitoring site. General guidance for siting can be found in EPA–454/B–13–003, Quality Assurance Handbook for Air Pollution Measurement Systems, Volume II: Ambient Air Quality Monitoring Program, May 2013 (Reference 3) (incorporated by reference—see § 63.14). Complex topography and physical site obstructions, such as bodies of water, hills, buildings, and other structures that may prevent access to a planned PS location must be taken into consideration. You must document and report siting interference with the results of this method.

4.2 *Background Interference.* Nearby or upwind sources of target emissions outside the facility being tested can contribute to background concentrations. Moreover, because passive samplers measure continuously, changes in wind direction can cause variation in the level of background concentrations from interfering sources during the monitoring period. This is why local meteorological information, particularly wind direction and speed, is required to be collected throughout the monitoring period. Interfering sources can include neighboring industrial facilities, transportation facilities, fueling operations, combustion sources, short-term transient sources, residential sources, and nearby highways or roads. As PS data are evaluated, the location of potential interferences with respect to PS locations and local wind conditions should be considered, especially when high PS concentration values are observed.

4.3 *Tube Handling.* You must protect the PS tubes from gross external contamination during field sampling. Analytical thermal desorption equipment used to analyze PS tubes must desorb organic compounds from the interior of PS tubes and excludes contamination from external sampler surfaces in the analytical/sample flow path. If the analytical equipment does not comply with this requirement, you must wear clean, white, cotton or powder-free nitrile gloves to handle sampling tubes to prevent contamination of the external sampler surfaces. Sampling tubes must be capped with two-piece, brass, 0.25 inch, long-term storage caps fitted with combined polytetrafluoroethylene ferrules (see Section 6.1 and Method 325B) to prevent ingress of airborne contaminants outside the sampling period. When not being used for field monitoring, the capped tubes must be stored in a clean, air-tight, shipping container to prevent the collection of VOCs (see Section 6.4.2 of Method 325B).

4.4 *Local Weather Conditions and Airborne Particulates.* Although air speeds are a constraint for many forms of passive samplers, axial tube PS devices have such a slow inherent uptake rate that they are largely immune to these effects (References 4,5). Passive samplers must nevertheless be deployed under non-emitting weatherproof hoods to moderate the effect of local weather conditions such as solar heating and rain. The cover must not impede the ingress of ambient air. Sampling tubes should also be orientated vertically and pointing downwards, to minimize accumulation of particulates.

4.5 *Temperature.* The normal working range for field sampling for sorbent packing is 0–40 °C (References 6,7). Note that most published passive uptake rate data for sorbent tubes is quoted at 20 °C. Note also that, as a rough guide, an increase in temperature of 10 °C will reduce the retention

volume (i.e., collection capacity) for a given analyte on a given sorbent packing by a factor of 2, but the uptake rate will not change significantly (Reference 4).

5.0 Safety

This method does not purport to include all safety issues or procedures needed when deploying or collecting passive sampling tubes. Precautions typical of field air sampling projects are required. Tripping, falling, electrical, and weather safety considerations must all be included in plans to deploy and collect passive sampling tubes.

6.0 Sampling Equipment and Supplies, and Pre-Deployment Planning

This section describes the equipment and supplies needed to deploy passive sampling monitoring equipment at a facility fenceline or property boundary. Details of the passive sampling tubes themselves and equipment required for subsequent analysis are described in Method 325B.

6.1 *Passive Sampling Tubes.* The industry standard PS tubes used in this method must meet the specific configuration and preparation described in Section 3.0 of this method and Section 6.1 of Method 325B.

Note: The use of PS tubes packed with various sorbent materials for monitoring a wide variety of organic compounds in ambient air has been documented in the literature (References 4–10). Other sorbents that may be used in standard passive sampling tubes for monitoring additional target compound(s) once their uptake rate and performance has been demonstrated following procedures in Addendum A to Method 325B. Guidance on sorbent selection can also be obtained from relevant national and international standard methods such as ASTM D6196–03 (2009) (Reference 14) (incorporated by reference—see § 63.14) and ISO 16017–2:2003 (Reference 13) (incorporated by reference—see § 63.14).

6.2 *Passive or Diffusive Sampling Cap.* One diffusive sampling cap is required per PS tube. The cap fits onto the sampling end of the tube during air monitoring. The other end of the tube remains sealed with the long-term storage cap. Each diffusive sampling cap is fitted with a stainless steel gauze, which defines the outer limit of the diffusion air gap.

6.3 *Sorbent Tube Protection Cover.* A simple weatherproof hood, suitable for protecting passive sampling tubes from the worst of the weather (see Section 4.4) consists of an inverted cone/funnel constructed of an inert, non-outgassing material that fits over the diffusive tube, with the open (sampling) end of the tube projecting just below the cone opening. An example is shown in Figure 6.1 (Adapted from Reference 13).

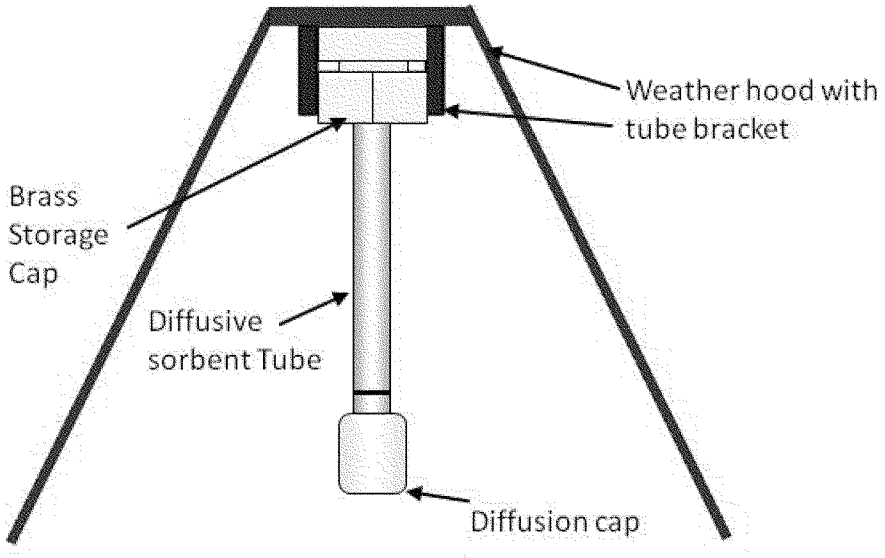

Figure 6.1. PS Tube with Weather Protector

6.4 Thermal Desorption Apparatus. If the analytical thermal desorber that will subsequently be used to analyze the passive sampling tubes does not meet the requirement to exclude outer surface contaminants from the sample flow path (see Section 6.6 of Method 325B), then clean, white, cotton or powder-free nitrile gloves must be used for handling the passive sampling tubes during field deployment.

6.5 *Sorbent Selection.* Sorbent tube configurations, sorbents or other VOC not listed in this method must be evaluated according to Method 325B, Addendum A or ISO 16017–2:2003 (Reference 13) (incorporated by reference—see § 63.14). The supporting evaluation and verification data described in Method 325B, Addendum A for configurations or compounds different from the ones described in this method must meet the performance requirements of Method 325A/B and must be submitted with the test plan for your measurement program.

7.0 Reagents and Standards

No reagents or standards are needed for the field deployment and collection of passive sampling tubes. Specifications for sorbents, gas and liquid phase standards, preloaded standard tubes, and carrier gases are covered in Section 7 of Method 325B.

8.0 Sample Deployment, Recovery, and Storage

Pre-deployment and planning steps are required before field deployment of passive sampling tubes. These activities include but are not limited to conducting a site visit, determining suitable and required monitoring locations, and determining the monitoring frequency to be used.

8.1 *Conducting the Site Visit.*

8.1.1 Determine the size and shape of the facility footprint in order to determine the required number of monitoring locations.

8.1.2 Identify obstacles or obstructions (buildings, roads, fences), hills and other terrain issues (*e.g.,* bodies of water or swamp land) that could interfere with air parcel flow to the sampler or that prevent reasonable access to the location. You may use the general guidance in Section 4.1 of this method during the site visit to identify sampling locations. You must evaluate the placement of each passive sampler to determine if the conditions in this section are met.

8.1.3 Identify to the extent possible and record potential off-site source interferences

(*e.g.,* neighboring industrial facilities, transportation facilities, fueling operations, combustion sources, short-term transient sources, residential sources, nearby highways).

8.1.4 Identify the closest available meteorological station. Identify potential locations for one or more on-site or near-site meteorological station(s) following the guidance in EPA–454/B–08–002, Quality Assurance Handbook for Air Pollution Measurement Systems, Volume IV: Meteorological Measurements, Version 2.0 (Final), March 2008 (Reference 11) (incorporated by reference—see § 63.14).

8.2 *Determining Sampling Locations (References 2, 3).*

8.2.1 The number and placement of the passive samplers depends on the size, the shape of the facility footprint or the linear distance around the facility, and the proximity of emission sources near the property boundaries. Aerial photographs or site maps may be used to determine the size (acreage) and shape of the facility or the length of the boundary. You will place passive samplers on the facility property boundary at different angles circling the geometric center of the facility based on the size of the area (or subarea) or at different distances based on the size and boundary length of the facility.

Note: In some instances, permanent air monitoring stations may already be located in close proximity to the facility. These stations may be operated and maintained by the site, or local or state regulatory agencies. If access to the station is possible, a PS may be deployed adjacent to other air monitoring instrumentation. A comparison of the pollutant concentrations measured with the PS to concentrations measured by site instrumentation may be used as an optional data quality indicator to assess the accuracy of PS.

8.2.2 *Option 1 for Determining Sampling Locations.*

8.2.2.1 For facilities with a regular (circular, triangular, rectangular, or square) shape, determine the geographic center of the facility.

8.2.2.1.1 For regularly shaped facilities with an area of less than or equal to 750 acres, measure angles around the center point of 30 degrees for a total of twelve 30 degree measurements.

8.2.2.1.2 For regularly shaped facilities covering an area greater than 750 acres but less than or equal to 1,500 acres, measure from the center point angles of 20 degrees for a total of eighteen 20 degree measurements. Figure 8.1 shows the monitor placement around the property boundary of a facility with an area between 750 and 1,500 acres. Monitor placements are represented with black dots along the property boundary.

8.2.2.1.3 For facilities covering an area greater than 1,500 acres, measure angles of 15 degrees from the center point for a total of twenty-four 15 degree measurements.

8.2.2.1.4 Place samplers securely on a pole or supporting structure at 1.5 to 3 meters above ground level at each point just beyond the intersection where the measured angle intersects the property boundary.

8.2.2.1.5 Extra samplers must be placed near known sources of VOCs at the test facility. In the case that a potential emission source is within 50 meters of the property boundary and the source location is between two monitors, measure the distance (x) between the two monitors and place another monitor halfway between (x/2) the two monitors. For example, in Figure 8.1 the facility added three additional monitors (*i.e.,* light shaded sampler locations) to provide sufficient coverage of all area sources.

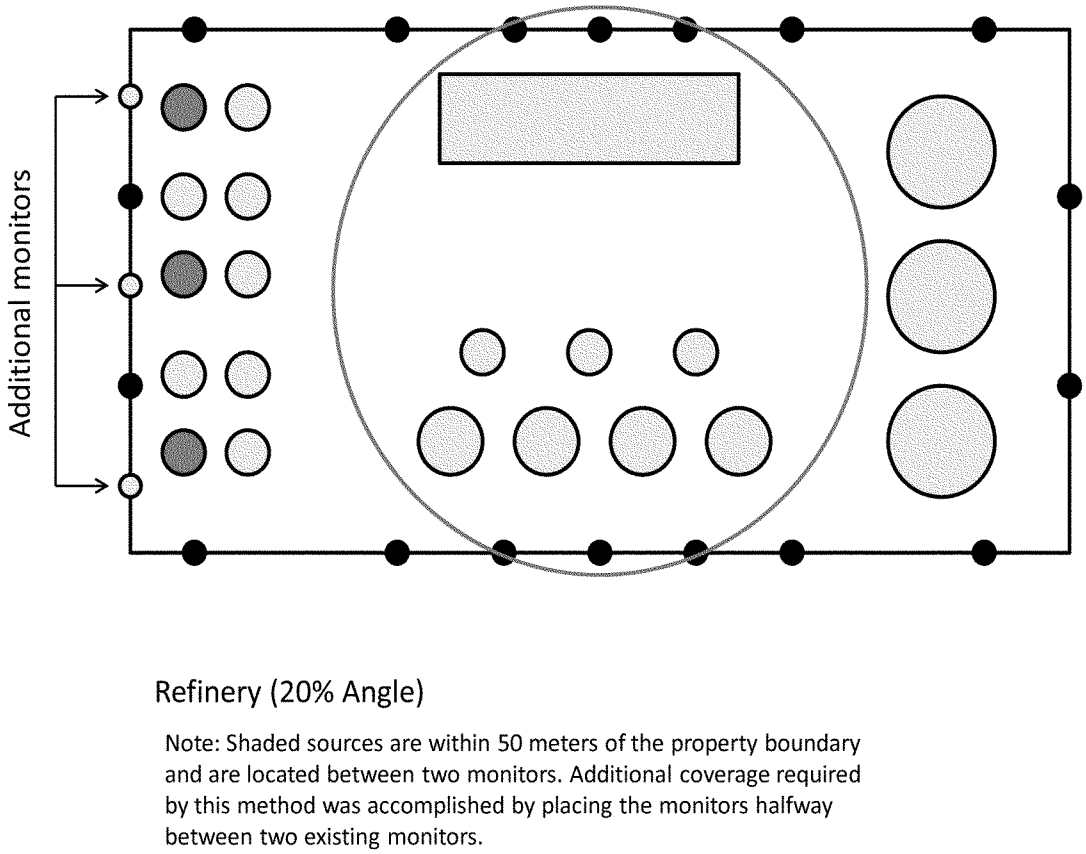

Figure 8.1. Facility with a Regular Shape Between 750 and 1,500 Acres in Area

8.2.2.2 For irregularly shaped facilities, divide the area into a set of connecting subarea circles, triangles or rectangles to determine sampling locations. The subareas must be defined such that a circle can reasonably encompass the subarea. Then

determine the geometric center point of each of the subareas.

8.2.2.2.1 If a subarea is less than or equal to 750 acres (*e.g.,* Figure 8.2), measure angles of 30 degrees from the center point for a total of twelve 30 degree measurements.

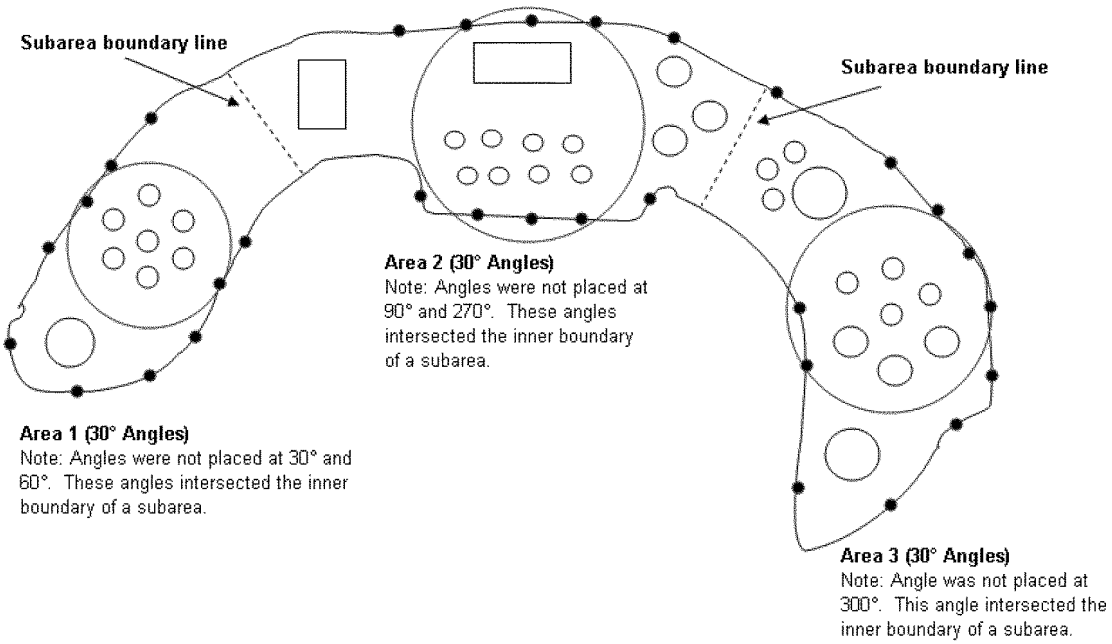

Figure 8.2. Facility Divided into Three Subareas

8.2.2.2.2 If a subarea is greater than 750 acres but less than or equal to 1,500 acres (*e.g.,* Figure 8.3), measure angles of 20 degrees from the center point for a total of eighteen 20 degree measurements.

8.2.2.2.3 If a subarea is greater than 1,500 acres, measure angles of 15 degrees from the center for a total of twenty-four 15 degree measurements.

8.2.2.3 Locate each sampling point just beyond the intersection of the measured angle and the outer property boundary.

8.2.2.4 Sampling sites are not needed at the intersection of an inner boundary with an adjacent subarea. The sampling location must be sited where the measured angle intersects more than one point along the subarea's outer boundary.

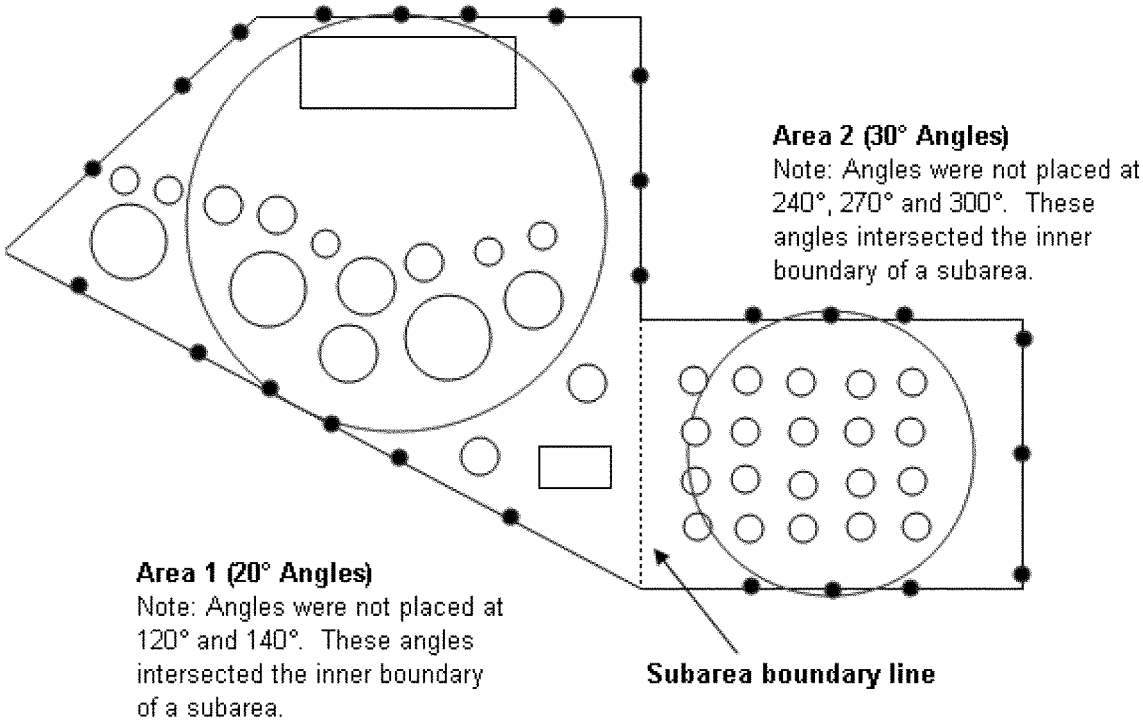

Figure 8.3. Facility Divided into Two Subareas

8.2.3 *Option 2 for Determining Sampling Locations.*

8.2.3.1 For facilities with a boundary length of less than 24,000 feet, a minimum of twelve sampling locations evenly spaced ± 10 percent of the location interval is required.

8.2.3.2 For facilities with a boundary length greater than 24,000 feet, sampling locations are spaced 2,000 ±250 feet apart.

8.2.3.4 Place samplers securely on a pole or supporting structure at 1.5 to 3 meters above ground level.

8.2.3.5 Extra samplers must be placed near known sources of VOCs at the test facility. In the case that a potential emission source is within 50 meters of the property boundary and the source location is between two monitors, measure the distance (x) between the two monitors and place another monitor halfway between (x/2) the two monitors. For example, in Figure 8.4, the facility added three additional monitors (*i.e.,* light shaded sampler locations) to provide sufficient coverage of all area sources.

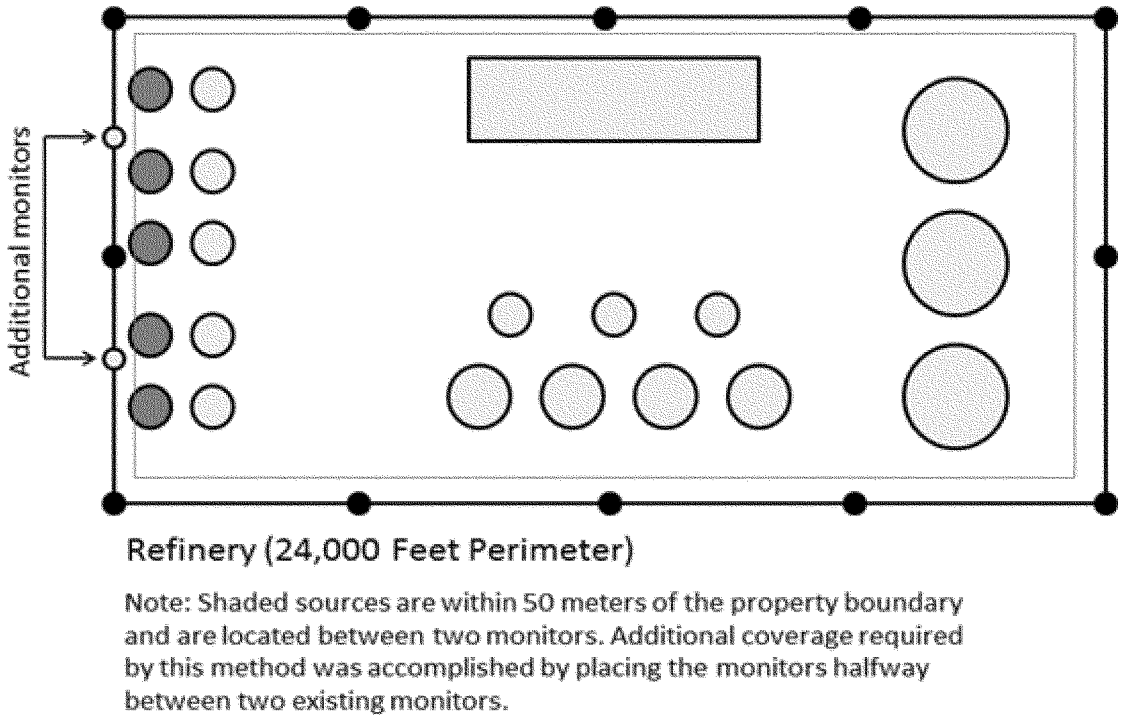

Figure 8.4. Facility with a Boundary Length of 24,000 feet

8.3 *Siting a Meteorological Station.* A dedicated meteorological station is required at or near the facility you are monitoring. A number of commercially available meteorological stations can be used. Information on meteorological instruments can be found in EPA–454/R–99–005, Meteorological Monitoring Guidance for Regulatory Modeling Applications, February 2000 (Reference 11) (incorporated by reference—see § 63.14). Some important considerations for siting of meteorological stations are detailed below.

8.3.1 Place meteorological stations in locations that represent conditions affecting the transport and dispersion of pollutants in the area of interest. Complex terrain may require the use of more than one meteorological station.

8.3.2 Deploy wind instruments over level, open terrain at a height of 10 meters. If possible, locate wind instruments at a distance away from nearby structures that is equal to at least 10 times the height of the structure.

8.3.3 Protect meteorological instruments from thermal radiation and adequately ventilate them using aspirated shields. The temperature sensor must be located at a distance away from any nearby structures that is equal to at least four times the height of the structure. Temperature sensors must be located at least 30 meters from large paved areas.

8.3.4 Collect and record meteorological data, including wind speed, wind direction, and temperature and average data on an hourly basis. Collect daily unit vector wind direction data plus average temperature and barometric pressure measurements of the sampled air to enable calculation of concentrations at standard conditions.

8.3.5 Identify and record the location of the meteorological station by its GPS coordinate.

8.4 *Monitoring Frequency.*

8.4.1 Sample collection may be performed for periods from 48 hours up to 14 days.

8.4.2 A site screening protocol that meets method requirements may be performed by collecting samples for a year where each PS accumulates VOC for a 14-day sampling period. Study results are accumulated for the sampling periods (typically 26) over the course of one calendar year. The sampling tubes must be changed at approximately the same time of day at each of the monitoring sites.

8.5 *Passive Sampler Deployment.*

8.5.1 Clean (conditioned) sorbent tubes must be prepared and packaged by the laboratory as described in Method 325B and must be deployed for sampling within 30 days of conditioning.

8.5.2 Allow the tubes to equilibrate with ambient temperature (approximately 30 minutes to 1 hour) at the monitoring location before removing them from their storage/shipping container for sample collection.

8.5.3 If there is any risk that the analytical equipment will not meet the requirement to exclude contamination on outer tube surfaces from the sample flow path (see Section 6.6 of Method 325B), sample handlers must wear clean, white, cotton or powder-free nitrile gloves during PS deployment and collection and throughout any other tube handling operations.

8.5.4 Inspect the sampling tubes immediately prior to deployment. Ensure that they are intact, securely capped, and in good condition. Any suspect tubes (*e.g.,* tubes that appear to have leaked sorbent) should be removed from the sampling set.

8.5.5 Secure passive samplers at a height of 1.5 to 2 meters above ground using a pole or other secure structure at each sampling location. Orient the PS vertically and with the sampling end pointing downward to avoid ingress of particulates.

Note: Duplicate sampling assemblies must be deployed at at least one monitoring location during each field monitoring exercise.

8.5.6 Protect the PS from rain and excessive wind velocity by placing them under the type of protective hood described in Section 6.1.3 or equivalent.

8.5.7 Remove the storage cap on the sampling end of the tube and replace it with a diffusive sampling cap at the start of the sampling period. Make sure the diffusion cap is properly seated and store the removed storage caps in the empty tube shipping container.

8.5.8 Record the start time and location details for each sampler on the field sample data sheet (see example in Section 17.0.)

8.5.9 Expose the sampling tubes for the 14-day sampling period.

8.5.10 Field blank tubes (see Section 9.3 of Method 325B) are stored outside the shipping container at representative sampling locations around the site, but with both long-term storage caps kept in place throughout the monitoring exercise. One field blank tube is required for every 10 sampled tubes on a monitoring exercise. No

less than two field blanks should be collected, regardless of the size of the monitoring study. Record the tube number(s) for the field blank(s) on the field sample data sheet.

8.6 *Sorbent Tube Recovery and Meteorological Data Collection.* Recover deployed sampling tubes and field blanks as follows:

8.6.1 After the sampling period is complete, immediately replace the diffusion end cap on each sampled tube with a long-term storage end cap. Tighten the seal securely by hand and then tighten an additional quarter turn with an appropriate tool. Record the stop date and time and any additional relevant information on the sample data sheet.

8.6.2 Place the sampled tubes, together with the field blanks, in the storage/shipping container. Label the storage container, but do not use paints, markers, or adhesive labels to identify the tubes. TD-compatible electronic (radio frequency identification (RFID)) tube labels are available commercially and are compatible with some brands of thermal desorber. If used, these may be programmed with relevant tube and sample information, which can be read and automatically transcribed into the sequence report by the TD system.

Note: Sampled tubes must not be placed in the same shipping container as clean conditioned sampling tubes.

8.6.3 Sampled tubes may be shipped at ambient temperature to a laboratory for sample analysis.

8.6.4 Specify whether the tubes are field blanks or were used for sampling and document relevant information for each tube using a Chain of Custody form (see example in Section 17.0) that accompanies the samples from preparation of the tubes through receipt for analysis, including the following information: Unique tube identification numbers for each sampled tube; the date, time, and location code for each PS placement; the date, time, and location code for each PS recovery; the GPS reference for each sampling location; the unique identification number of the duplicate sample (if applicable); and problems or anomalies encountered.

8.6.5 If the sorbent tubes are supplied with electronic (e.g., RFID) tags, it is also possible to allocate a sample identifier to each PS tube. In this case, the recommended format for the identification number of each sampled tube is AA–BB–CC–DD–VOC, where:

AA = Sequence number of placement on route (01, 02, 03 . . .)
BB = Sampling location code (01, 02, 03 . . .)
CC = 14-day sample period number (01 to 26)
DD = Sample code (SA = sample, DU = duplicate, FB = field blank)
VOC = 3-letter code for target compound(s) (*e.g.,* BNZ for benzene or BTX for benzene, toluene, and xylenes)

Note: Sampling start and end times/dates can also be logged using RFID tube tags.

8.6.6 Collect daily unit vector wind direction data plus average temperature and barometric pressure measurements to enable calculation of concentrations at standard conditions. You must supply this information to the laboratory with the samples.

9.0 Quality Control

9.1 Most quality control checks are carried out by the laboratory and associated requirements are in Section 9.0 of Method 325B, including requirements for laboratory blanks, field blanks, and duplicate samples.

9.2 Evaluate for potential outliers the laboratory results for neighboring sampling tubes collected over the same time period. A potential outlier is a result for which one or more PS tube does not agree with the trend in results shown by neighboring PS tubes—particularly when data from those locations have been more consistent during previous sampling periods. Accidental contamination by the sample handler must be documented before any result can be eliminated as an outlier. Rare but possible examples of contamination include loose or missing storage caps or contaminated storage/shipping containers. Review data from the same and neighboring monitoring locations for the subsequent sampling periods. If the anomalous result is not repeated for that monitoring location, the episode can be ascribed to transient contamination and the data in question must be flagged for potential elimination from the dataset.

9.3 *Duplicates and Field Blanks.*

9.3.1 Collect at least one co-located/duplicate sample for every 10 field samples to determine precision of the measurements.

9.3.2 Collect at least two field blanks sorbent samples per sampling period to ensure sample integrity associated with shipment, collection, and storage. You must use the entire sampling apparatus for field blanks including unopened sorbent tubes mounted in protective sampling hoods. The tube closures must not be removed. Field blanks must be placed in two different quadrants (*e.g.,* 90° and 270°) and remain at the sampling location for the sampling period.

10.0 Calibration and Standardization

Follow the calibration and standardization procedures for meteorological measurements in EPA–454/B–08–002, Quality Assurance Handbook for Air Pollution Measurement Systems, Volume IV: Meteorological Measurements, Version 2.0 (Final), March 2008 (Reference 11) (incorporated by reference—see § 63.14). Refer to Method 325B for calibration and standardization procedures for analysis of the passive sampling tubes.

11.0 Analytical Procedures

Refer to Method 325B, which provides details for the preparation and analysis of sampled passive monitoring tubes (preparation of sampling tubes, shipment and storage of exposed sampling tubes, and analysis of sampling tubes).

12.0 Data Analysis, Calculations and Documentation

12.1 *Calculate Annual Average Fenceline Concentration.* After a year's worth of sampling at the facility fenceline (for example, 26 14-day samples), the average (PS_i) can be calculated for any specified period at each PS location using Equation 12.1.

$$PS_i = \frac{\sum PS_{ip}}{N} \qquad \text{Eq. 12.1}$$

Where:

PS_i = Annual average for location *i.*
PS_{ip} = Sampling period specific concentration from Method 325B.
i = Location of passive sampler (0 to 360°).
p = The sampling period.
N = The number of sampling periods in the year (*e.g.,* for 14-day sampling periods, from 1 to 26).

Note: PS_{ip} is a function of sampling location-specific factors such as the contribution from facility sources, unusual localized meteorological conditions, contribution from nearby interfering sources, the background caused by integrated far-field sources and measurement error due to deployment, handling, siting, or analytical errors.

12.2 *Identify Sampling Locations of Interest.* If data from neighboring sampling locations are significantly different, then you may add extra sampling points to isolate background contributions or identify facility-specific ''hot spots.''

12.3 *Evaluate Trends.* You may evaluate trends and patterns in the PS data over multiple sampling episodes to determine if elevated concentrations of target compounds are due to operations on the facility or if contributions from background sources are significant.

12.3.1 Obtain meteorological data including wind speed and wind direction or unit vector wind data from the on-site meteorological station. Use this meteorological data to determine the prevailing wind direction and speed during the periods of elevated concentrations.

12.3.2 As an option you may perform preliminary back trajectory calculations (*http://ready.arl.noaa.gov/HYSPLIT.php*) to aid in identifying the source of the background contribution to elevated target compound concentrations.

12.3.3 Information on published or documented events on- and off-site may also be included in the associated sampling episode report to explain elevated concentrations if relevant. For example, you

would describe if there was a chemical spill on site, or an accident on an adjacent road.

12.3.4 Additional monitoring for shorter periods may be necessary to allow better discrimination/resolution of contributing emission sources if the measured trends and associated meteorology do not provide a clear assessment of facility contribution to the measured fenceline concentration.

13.0 Method Performance

Method performance requirements are described in Method 325B.

14.0 Pollution Prevention

[Reserved]

15.0 Waste Management

[Reserved]

16.0 References

1. Ambient air quality—Standard method for measurement of benzene concentrations—Part 4: Diffusive sampling followed by thermal desorption and gas chromatography, BS EN 14662–4:2005.
2. Thoma, E.D., Miller, C.M., Chung, K.C., Parsons, N.L. and Shine, B.C. Facility Fence Line Monitoring using Passive Samplers, J. Air & Waste Mange. Assoc. 2011, 61:834–842.
3. Quality Assurance Handbook for Air Pollution Measurement Systems, Volume II: Ambient Air Quality Monitoring Program, EPA–454/B–13–003, May 2013. Available at *http://www.epa.gov/ttnamti1/files/ambient/pm25/qa/QA-Handbook-Vol-II.pdf.*
4. Brown, R.H., Charlton, J. and Saunders, K.J.: The development of an improved diffusive sampler. Am. Ind. Hyg. Assoc. J. 1981, 42(12): 865–869.
5. Brown, R. H. Environmental use of diffusive samplers: evaluation of reliable diffusive uptake rates for benzene, toluene and xylene. J. Environ. Monit. 1999, 1 (1), 115–116.
6. Ballach, J.; Greuter, B.; Schultz, E.; Jaeschke, W. Variations of uptake rates in benzene diffusive sampling as a function of ambient conditions. Sci. Total Environ. 1999, 244, 203–217.
7. Brown, R. H. Monitoring the ambient environment with diffusive samplers: theory and practical considerations. J Environ. Monit. 2000, 2(1), 1–9.
8. Buzica, D.; Gerboles, M.; Plaisance, H. The equivalence of diffusive samplers to reference methods for monitoring O_3, benzene and NO_2 in ambient air. J. Environ. Monit. 2008, 10 (9), 1052–1059.
9. Woolfenden, E. Sorbent-based sampling methods for volatile and semi-volatile organic compounds in air. Part 2. Sorbent selection and other aspects of optimizing air monitoring methods. J. Chromatogr. A 2010, 1217, (16), 2685–94.
10. Pfeffer, H. U.; Breuer, L. BTX measurements with diffusive samplers in the vicinity of a cokery: Comparison between ORSA-type samplers and pumped sampling. J. Environ. Monit. 2000, 2 (5), 483–486.
11. US EPA. 2000. Meteorological Monitoring Guidance for Regulatory Modeling Applications. EPA–454/R–99–005. Office of Air Quality Planning and Standards, Research Triangle Park, NC. February 2000. Available at *http://www.epa.gov/scram001/guidance/met/mmgrma.pdf.*
12. Quality Assurance Handbook for Air Pollution Measurement Systems. Volume IV: Meteorological Measurements Version 2.0 Final, EPA–454/B–08–002 March 2008. Available at *http://www.epa.gov/ttnamti1/files/ambient/met/Volume%20IV_Meteorological_Measurements.pdf.*
13. ISO 16017–2:2003, Indoor, ambient and workplace air—Sampling and analysis of volatile organic compounds by sorbent tube/thermal desorption/capillary gas chromatography. Part 2: Diffusive sampling.
14. ASTM D6196–03(2009): Standard practice for selection of sorbents, sampling, and thermal desorption analysis procedures for volatile organic compounds in air.

17.0 Tables, Diagrams, Flowcharts and Validation Data

Method 325 A/B

EXAMPLE FIELD TEST DATA SHEET (FTDS) AND CHAIN OF CUSTODY

I. GENERAL INFORMATION

SITE NAME:

_____

SITE LOCATION ADDRESS:

_____

CITY: _____ STATE: _____ ZIP: _____

II. SAMPLING DATA

Sample ID (Tube) #	Sorbent	Sample or blank	Start Date	Start Time	Stop Date	Stop Time	Location (gps)	Ambient Temp. (°F)	Barometric Pressure (in. Hg)

III. CUSTODY INFORMATION

COLLECTED BY: _____

Relinquished to Shipper -

Name: _____ Date: _____ Time _____

Received by Laboratory -

Name _____ Date: _____ Time _____

Sample condition upon receipt:

_____

Analysis Required:

_____

_____

Comments:

_____

_____

_____

Figure 17.1. Example Field Data Form and Chain of Custody

Method 325B—Volatile Organic Compounds From Fugitive and Area Sources

Sampler Preparation and Analysis

1.0 Scope and Application

1.1 This method describes thermal desorption/gas chromatography (TD/GC) analysis of volatile organic compounds (VOCs) from fugitive and area emission sources collected onto sorbent tubes using passive sampling. It could also be applied to the TD/GC analysis of VOCs collected using active (pumped) sampling onto sorbent tubes. The concentration of airborne VOCs at or near potential fugitive- or area-emission sources may be determined using this method in combination with Method 325A. Companion Method 325A (Sampler Deployment and VOC Sample Collection) describes procedures for deploying the sorbent tubes and passively collecting VOCs.

1.2 The preferred GC detector for this method is a mass spectrometer (MS), but flame ionization detectors (FID) may also be used. Other conventional GC detectors such as electron capture (ECD), photoionization (PID), or flame photometric (FPD) may also be used if they are selective and sensitive to the target compound(s) and if they meet the method performance criteria provided in this method.

1.3 There are 97 VOCs listed as hazardous air pollutants in Title III of the Clean Air Act Amendments of 1990. Many of these VOC are candidate compounds for this method. Compounds with known uptake rates for Carbopack X or equivalent are listed in Table 12.1. This method provides performance criteria to demonstrate acceptable performance of the method (or modifications of the method) for monitoring a given compound or set of the compounds listed in Table 12.1. If standard passive sampling tubes are packed with other sorbents or used for other analytes than those listed in Table 12.1, then method performance and relevant uptake rates should be verified according to Appendix A to this method unless the compound or sorbent has already been validated and reported in one of the following national/international standard methods: ISO 16017–2:2003(incorporated by reference—see § 63.14), ASTM D6196–03(2009) (incorporated by reference—see § 63.14), or BS EN 14662–4:2005 (incorporated by reference—see § 63.14), or in the peer-reviewed open literature.

1.4 The analytical approach using TD/GC/MS is based on previously published EPA guidance in Compendium Method TO–17 (*http://www.epa.gov/ttnamti1/airtox.html#compendium*) (Reference 1), which describes active (pumped) sampling of VOCs from ambient air onto tubes packed with thermally stable adsorbents.

1.5 Inorganic gases not suitable for analysis by this method include oxides of carbon, nitrogen and sulfur, ozone (O_3), and other diatomic permanent gases. Other pollutants not suitable for this analysis method include particulate pollutants, (*i.e.,* fumes, aerosols, and dusts), compounds too labile (reactive) for conventional GC analysis, and VOCs that are more volatile than propane.

2.0 Summary of Method

2.1 This method provides procedures for the preparation, conditioning, blanking, and shipping of sorbent tubes prior to sample collection.

2.2 Laboratory and field personnel must have experience of sampling trace-level VOCs using sorbent tubes (References 2, 5) and must have experience operating thermal desorption/GC/multi-detector instrumentation.

2.3 Key steps of this method as implemented for each sample tube include: Stringent leak testing under stop flow, recording ambient temperature conditions, adding internal standards, purging the tube, thermally desorping the sampling tube, refocusing on a focusing trap, desorping and transferring/injecting the VOCs from the secondary trap into the capillary GC column for separation and analysis.

2.4 Water management steps incorporated into this method include: (a) selection of hydrophobic sorbents in the sampling tube; (b) optional dry purging of sample tubes prior to analysis; and (c) additional selective elimination of water during primary (tube) desorption (if required) by selecting trapping sorbents and temperatures such that target compounds are quantitatively retained while water is purged to vent.

3.0 Definitions

(See also Section 3.0 of Method 325A).

3.1 *Blanking* is the desorption and confirmatory analysis of conditioned sorbent tubes before they are sent for field sampling.

3.2 *Breakthrough volume and associated relation to passive sampling.* Breakthrough volumes, as applied to active sorbent tube sampling, equate to the volume of air containing a constant concentration of analyte that may be passed through a sorbent tube at a given temperature before a detectable level (5 percent) of the input analyte concentration elutes from the tube. Although breakthrough volumes are directly related to active rather than passive sampling, they provide a measure of the strength of the sorbent-sorbate interaction and therefore also relate to the efficiency of the passive sampling process. The best direct measure of passive sampling efficiency is the stability of the uptake rate. Quantitative passive sampling is compromised when back diffusion becomes significant—*i.e.,* when the concentration of a target analyte immediately above the sorbent sampling surface no longer approximates to zero. This causes a reduction in the uptake rate over time. If the uptake rate for a given analyte on a given sorbent tube remains relatively constant—*i.e.,* if the uptake rate determined for 48 hours is similar to that determined for 7 or 14 days—the user can be confident that passive sampling is occurring at a constant rate. As a general rule of thumb, such ideal passive sampling conditions typically exist for analyte:sorbent combinations where the breakthrough volume exceeds 100 L (Reference 4).

3.3 *Calibration verification sample.* Single level calibration samples run periodically to confirm that the analytical system continues to generate sample results within acceptable agreement to the current calibration curve.

3.4 *Focusing trap* is a cooled, secondary sorbent trap integrated into the analytical thermal desorber. It typically has a smaller i.d. and lower thermal mass than the original sample tube allowing it to effectively refocus desorbed analytes and then heat rapidly to ensure efficient transfer/injection into the capillary GC analytical column.

3.5 *High Resolution Capillary Column Chromatography* uses fused silica capillary columns with an inner diameter of 320 µm or less and with a stationary phase film thickness of 5 µm or less.

3.6 *h* is time in hours.

3.7 *i.d.* is inner diameter.

3.8 *min* is time in minutes.

3.9 *MS–SCAN* is the mode of operation of a GC quadrupole mass spectrometer detector that measures all ions over a given mass range over a given period of time.

3.10 *MS–SIM* is the mode of operation of a GC quadrupole mass spectrometer detector that measures only a single ion or a selected number of discrete ions for each analyte.

3.11 *o.d.* is outer diameter.

3.12 *ppbv* is parts per billion by volume.

3.13 *Retention volume* is the volume of gas required to move an analyte vapor plug through the sorbent tube at a given temperature during active (pumped) sampling. Note that retention volume provides another measure of the strength of sorbent:sorbate (analyte) affinity and is closely related to breakthrough volume—See discussion in Section 3.2 above.

3.14 *Thermal desorption* is the use of heat and a flow of inert (carrier) gas to extract volatiles from a solid matrix. No solvent is required.

3.15 *Total ion chromatogram* is the chromatogram produced from a mass spectrometer detector collecting full spectral information.

3.16 *Two-stage thermal desorption* is the process of thermally desorbing analytes from a sorbent tube, reconcentrating them on a focusing trap (see Section 3.4), which is then itself rapidly heated to ''inject'' the concentrated compounds into the GC analyzer.

3.17 *VOC* means volatile organic compound.

4.0 Analytical Interferences

4.1 *Interference from Sorbent Artifacts.* Artifacts may include target analytes as well as other VOC that co-elute chromatographically with the compounds of interest or otherwise interfere with the identification or quantitation of target analytes.

4.1.1 Sorbent decomposition artifacts are VOCs that form when sorbents degenerate, *e.g.,* when exposed to reactive species during sampling. For example, benzaldehyde, phenol, and acetophenone artifacts are reported to be formed via oxidation of the polymer Tenax® when sampling high concentration (100–500 ppb) ozone atmospheres (Reference 5).

4.1.2 Preparation and storage artifacts are VOCs that were not completely cleaned from the sorbent tube during conditioning or that are an inherent feature of that sorbent at a given temperature.

4.2 *Humidity.* Moisture captured during sampling can interfere with VOC analysis.

Passive sampling using tubes packed with hydrophobic sorbents, like those described in this method, minimizes water retention. However, if water interference is found to be an issue under extreme conditions, one or more of the water management steps described in Section 2.4 can be applied.

4.3 *Contamination from Sample Handling.* The type of analytical thermal desorption equipment selected should exclude the possibility of outer tube surface contamination entering the sample flow path (see Section 6.6). If the available system does not meet this requirement, sampling tubes and caps must be handled only while wearing clean, white cotton or powder free nitrile gloves to prevent contamination with body oils, hand lotions, perfumes, etc.

5.0 Safety

5.1 This method does not address all of the safety concerns associated with its use. It is the responsibility of the user of this standard to establish appropriate field and laboratory safety and health practices prior to use.

5.2 Laboratory analysts must exercise extreme care in working with high-pressure gas cylinders.

5.3 Due to the high temperatures involved, operators must use caution when conditioning and analyzing tubes.

6.0 Equipment and Supplies

6.1 *Tube Dimensions and Materials.* The sampling tubes for this method are 3.5-inches (89 mm) long, ¼ inch (6.4 mm) o.d., and 5 mm i.d. passive sampling tubes (see Figure 6.1). The tubes are made of inert-coated stainless steel with the central section (up to 60 mm) packed with sorbent, typically supported between two 100 mesh stainless steel gauze. The tubes have a cross sectional area of 19.6 square mm (5 mm i.d.). When used for passive sampling, these tubes have an internal diffusion (air) gap (DG) of 1.5 cm between the sorbent retaining gauze at the sampling end of the tube, and the gauze in the diffusion cap.

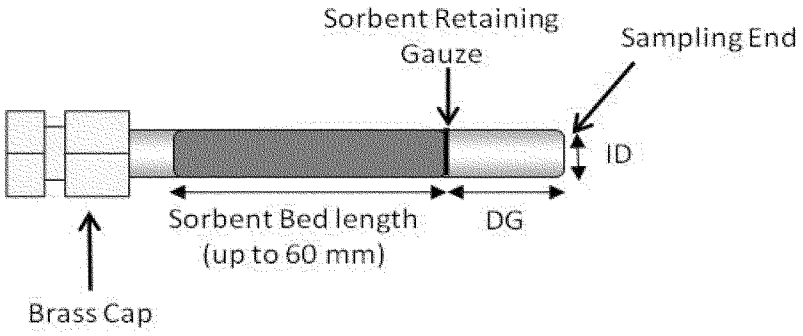

Figure 6.1. Cross Section View of Passive Sorbent Tube

6.2 *Tube Conditioning Apparatus.*

6.2.1 Freshly packed or newly purchased tubes must be conditioned as described in Section 9 using an appropriate dedicated tube conditioning unit or the thermal desorber. Note that the analytical TD system should only be used for tube conditioning only if it supports a dedicated tube conditioning mode in which effluent from contaminated tubes is directed to vent without passing through key parts of the sample flow path such as the focusing trap.

6.2.2 Dedicated tube conditioning units must be leak-tight to prevent air ingress, allow precise and reproducible temperature selection (±5 °C), offer a temperature range at least as great as that of the thermal desorber, and support inert gas flows in the range up to 100 mL/min.

Note: For safety and to avoid laboratory contamination, effluent gases from freshly packed or highly contaminated tubes should be passed through a charcoal filter during the conditioning process to prevent desorbed VOCs from polluting the laboratory atmosphere.

6.3 *Tube Labeling.*

6.3.1 Label the sample tubes with a unique permanent identification number and an indication of the sampling end of the tube. Labeling options include etching and TD-compatible electronic (radio frequency identification (RFID)) tube labels.

6.3.2 To avoid contamination, do not make ink markings of any kind on clean sorbent tubes or apply adhesive labels.

Note: TD-compatible electronic (RFID) tube labels are available commercially and are compatible with some brands of thermal desorber. If used, these may be programmed with relevant tube and sample information, which can be read and automatically transcribed into the sequence report by the TD system (see Section 8.6 of Method 325A).

6.4 *Blank and Sampled Tube Storage Apparatus.*

6.4.1 Long-term storage caps. Seal clean, blank and sampled sorbent tubes using inert, long-term tube storage caps comprising non-greased, 2-piece, 0.25-inch, metal SwageLok®-type screw caps fitted with combined polytetrafluoroethylene ferrules.

6.4.2 Storage and transportation containers. Use clean glass jars, metal cans or rigid, non-emitting polymer boxes.

Note: You may add a small packet of new activated charcoal or charcoal/silica gel to the shipping container for storage and transportation of batches of conditioned sorbent tubes prior to use. Coolers without ice packs make suitable shipping boxes for containers of tubes because the coolers help to insulate the samples from extreme temperatures (*e.g.,* if left in a parked vehicle).

6.5 *Unheated GC Injection Unit for Loading Standards onto Blank Tubes.* A suitable device has a simple push fit or finger-tightening connector for attaching the sampling end of blank sorbent tubes without damaging the tube. It also has a means of controlling carrier gas flow through the injector and attached sorbent tube at 50–100 ml/min and includes a low emission septum cap that allows the introduction of gas or liquid standards via appropriate syringes. Reproducible and quantitative transfer of higher boiling compounds in liquid standards is facilitated if the injection unit allows the tip of the syringe to just touch the sorbent retaining gauze inside the tube.

6.6 *Thermal Desorption Apparatus.* The manual or automated thermal desorption system must heat sorbent tubes while a controlled flow of inert (carrier) gas passes through the tube and out of the sampling end. The apparatus must also incorporate a focusing trap to quantitatively refocus compounds desorbed from the tube. Secondary desorption of the focusing trap should be fast/efficient enough to transfer the compounds into the high resolution capillary GC column without band broadening and without any need for further pre- or on-column focusing. Typical TD focusing traps comprise small sorbent traps (Reference 16) that are electrically-cooled using multistage Peltier cells (References 17, 18). The direction of gas flow during trap desorption should be the reverse of that used for focusing to extend the compatible analyte volatility range. Closed cycle coolers offer another cryogen-free trap cooling option. Other TD system requirements and operational stages are described in Section 11 and in Figures 17–2 through 17–4.

6.7 *Thermal Desorber—GC Interface.*

6.7.1 The interface between the thermal desorber and the GC must be heated uniformly and the connection between the transfer line insert and the capillary GC analytical column itself must be leak tight.

6.7.2 A portion of capillary column can alternatively be threaded through the heated transfer line/TD interface and connected directly to the thermal desorber.

Note: Use of a metal syringe-type needle or unheated length of fused silica pushed

through the septum of a conventional GC injector is not permitted as a means of interfacing the thermal desorber to the chromatograph. Such connections result in cold spots, cause band broadening and are prone to leaks.

6.8 *GC/MS Analytical Components.*

6.8.1 The GC system must be capable of temperature programming and operation of a high resolution capillary column. Depending on the choice of column (*e.g.,* film thickness) and the volatility of the target compounds, it may be necessary to cool the GC oven to subambient temperatures (*e.g.,* −50 °C) at the start of the run to allow resolution of very volatile organic compounds.

6.8.2 All carrier gas lines supplying the GC must be constructed from clean stainless steel or copper tubing. Non-polytetrafluoroethylene thread sealants. Flow controllers, cylinder regulators, or other pneumatic components fitted with rubber components are not suitable.

6.9 *Chromatographic Columns.* High-resolution, fused silica or equivalent capillary columns that provide adequate separation of sample components to permit identification and quantitation of target compounds must be used.

Note: 100-percent methyl silicone or 5-percent phenyl, 95-percent methyl silicone fused silica capillary columns of 0.25- to 0.32-mm i.d. of varying lengths and with varying thicknesses of stationary phase have been used successfully for non-polar and moderately polar compounds. However, given the diversity of potential target lists, GC column choice is left to the operator, subject to the performance criteria of this method.

6.10 *Mass Spectrometer.* Linear quadrupole, magnetic sector, ion trap or time-of-flight mass spectrometers may be used provided they meet specified performance criteria. The mass detector must be capable of collecting data from 35 to 300 atomic mass units (amu) every 1 second or less, utilizing 70 volts (nominal) electron energy in the electron ionization mode, and producing a mass spectrum that meets all the instrument performance acceptance criteria in Section 9 when 50 ηg or less of p-bromofluorobenzene is analyzed.

7.0 Reagents and Standards

7.1 *Sorbent Selection.*

7.1.1 Use commercially packed tubes meeting the requirements of this method or prepare tubes in the laboratory using sieved sorbents of particle size in the range 20 to 80 mesh that meet the retention and quality control requirements of this method.

7.1.2 This passive air monitoring method can be used without the evaluation specified in Addendum A if the type of tubes described in Section 6.1 are packed with 4–6 cm (typically 400–650 mg) of the sorbents listed in Table 12.1 and used for the respective target analytes.

Note: Although Carbopack X is the optimum sorbent choice for passive sampling of 1,3-butadiene, recovery of compounds with vapor pressure lower than benzene may be difficult to achieve without exceeding sorbent maximum temperature limitations (see Table 8.1). See ISO 16017–2:2003 (incorporated by reference—see § 63.14) or ASTM D6196–03(2009) (incorporated by reference—see § 63.14) for more details on sorbent choice for air monitoring using passive sampling tubes.

7.1.3 If standard passive sampling tubes are packed with other sorbents or used for analytes other than those tabulated in Section 12.0, method performance and relevant uptake rates should be verified according to Addendum A to this method unless the compound or sorbent has already been validated and reported in one of the following national/international standard methods: ISO 16017–2:2003 (incorporated by reference—see § 63.14), ASTM D6196–03(2009) (incorporated by reference—see § 63.14), or BS EN 14662–4:2005 (incorporated by reference—see § 63.14)—or in the peer-reviewed open literature. A summary table and the supporting evaluation data demonstrating the selected sorbent meets the requirements in Addendum A to this method must be submitted to the regulatory authority as part of a request to use an alternative sorbent.

7.1.4 Passive (diffusive) sampling and thermal desorption methods that have been evaluated at relatively high atmospheric concentrations (*i.e.,* mid-ppb to ppm) and published for use in workplace air and industrial/mobile source emissions testing (References 9–20) may be applied to this procedure. However, the validity of any shorter term uptake rates must be verified and adjusted if necessary for the longer monitoring periods required by this method by following procedures described in Addendum A to this method.

7.1.5 Suitable sorbents for passive sampling must have breakthrough volumes of at least 20 L (preferably >100 L) for the compounds of interest and must quantitatively release the analytes during desorption without exceeding maximum temperatures for the sorbent or instrumentation.

7.1.6 Repack/replace the sorbent tubes or demonstrate tube performance following the requirements in Addendum A to this method at least yearly or every 50 uses, whichever occurs first.

7.2 *Gas Phase Standards.*

7.2.1 Static or dynamic standard atmospheres may be used to prepare calibration tubes and/or to validate passive sampling uptake rates and can be generated from pure chemicals or by diluting concentrated gas standards. The standard atmosphere must be stable at ambient pressure and accurate to ±10 percent of the target gas concentration. It must be possible to maintain standard atmosphere concentrations at the same or lower levels than the target compound concentration objectives of the test. Test atmospheres used for validation of uptake rates must also contain at least 35 percent relative humidity.

Note: Accurate, low-(ppb-) level gas-phase VOC standards are difficult to generate from pure materials and may be unstable depending on analyte polarity and volatility. Parallel monitoring of vapor concentrations with alternative methods, such as pumped sorbent tubes or sensitive/selective on-line detectors, may be necessary to minimize uncertainty. For these reasons, standard atmospheres are rarely used for routine calibration.

7.2.2 Concentrated, pressurized gas phase standards. Accurate (±5 percent or better), concentrated gas phase standards supplied in pressurized cylinders may also be used for calibration. The concentration of the standard should be such that a 0.5–5.0 mL volume contains approximately the same mass of analytes as will be collected from a typical air sample.

7.2.3 Follow manufacturer's guidelines concerning storage conditions and recertification of the concentrated gas phase standard. Gas standards must be recertified a minimum of once every 12 months.

7.3 *Liquid Standards.* Target analytes can also be introduced to the sampling end of sorbent tubes in the form of liquid calibration standards.

7.3.1 The concentration of liquid standards must be such that an injection of 0.5–2 µl of the solution introduces the same mass of target analyte that is expected to be collected during the passive air sampling period.

7.3.2 *Solvent Selection.* The solvent selected for the liquid standard must be pure (contaminants <10 percent of minimum analyte levels) and must not interfere chromatographically with the compounds of interest.

7.3.3 If liquid standards are sourced commercially, follow manufacturer's guidelines concerning storage conditions and shelf life of unopened and opened liquid stock standards.

Note: Commercial VOC standards are typically supplied in volatile or non-interfering solvents such as methanol.

7.3.4 Working standards must be stored at 6 °C or less and used or discarded within two weeks of preparation.

7.4 *Gas Phase Internal Standards.*

7.4.1 Gas-phase deuterated or fluorinated organic compounds may be used as internal standards for MS-based systems.

7.4.2 Typical compounds include deuterated toluene, perfluorobenzene and perfluorotoluene.

7.4.3 Use multiple internal standards to cover the volatility range of the target analytes.

7.4.4 Gas-phase standards must be obtained in pressurized cylinders and containing vendor certified gas concentrations accurate to ±5 percent. The concentration should be such that the mass of internal standard components introduced is similar to those of the target analytes collected during field monitoring.

7.5 *Preloaded Standard Tubes.* Certified, preloaded standard tubes, accurate within ±5 percent for each analyte at the microgram level and ±10 percent at the nanogram level, are available commercially and may be used for auditing and quality control purposes. (See Section 9.5 for audit accuracy evaluation criteria.) Certified preloaded tubes may also be used for routine calibration.

Note: Proficiency testing schemes are also available for TD/GC/MS analysis of sorbent tubes preloaded with common analytes such as benzene, toluene, and xylene.

7.6 *Carrier Gases.* Use inert, 99.999-percent or higher purity helium as carrier

gas. Oxygen and organic filters must be installed in the carrier gas lines supplying the analytical system according to the manufacturer's instructions. Keep records of filter and oxygen scrubber replacement.

8.0 Sorbent Tube Handling (Before and After Sampling)

8.1 *Sample Tube Conditioning.*

8.1.1 Sampling tubes must be conditioned using the apparatus described in Section 6.2.

8.1.2 New tubes should be conditioned for 2 hours to supplement the vendor's conditioning procedure. Recommended temperatures for tube conditioning are given in Table 8.1.

8.1.3 After conditioning, the blank must be verified on each new sorbent tube and on 10 percent of each batch of reconditioned tubes. See Section 9.0 for acceptance criteria.

TABLE 8.1—EXAMPLE SORBENT TUBE CONDITIONING PARAMETERS

Sampling sorbent	Maximum temperature (°C)	Conditioning temperature (°C)	Carrier gas flow rate
Carbotrap C®	>400	350	100 mL/min.
Carbopack C®			
Anasorb® GCB2			
Carbograph 1 TD			
Carbotrap®			
Carbopack B®			
Anasorb® GCB1			
Tenax® TA	350	330	100 mL/min.
Carbopack® X			

8.2 *Capping, Storage and Shipment of Conditioned Tubes.*

8.2.1 Conditioned tubes must be sealed using long-term storage caps (see Section 6.4) pushed fully down onto both ends of the PS sorbent tube, tightened by hand and then tighten an additional quarter turn using an appropriate tool.

8.2.2 The capped tubes must be kept in appropriate containers for storage and transportation (see Section 6.4.2). Containers of sorbent tubes may be stored and shipped at ambient temperature and must be kept in a clean environment.

8.2.3 You must keep batches of capped tubes in their shipping boxes or wrap them in uncoated aluminum foil before placing them in their storage container, especially before air freight, because the packaging helps hold caps in position if the tubes get very cold.

8.3 *Calculating the Number of Tubes Required for a Monitoring Exercise.*

8.3.1 Follow guidance given in Method 325A to determine the number of tubes required for site monitoring.

8.3.2 The following additional samplers will also be required: Laboratory blanks as specified in Section 9.3.2 (two per sampling episode minimum), field blanks as specified in Section 9.3.4 (two per sampling episode minimum), calibration verification tubes as specified in Section 10.9.4. (at least one per analysis sequence or every 24 hours), and paired (duplicate) samples as specified in Section 9.4 (at least one pair of duplicate samples is required for every 10 sampling locations during each monitoring period).

8.4 *Sample Collection.*

8.4.1 Allow the tubes to equilibrate with ambient temperature (approximately 30 minutes to 1 hour) at the monitoring location before removing them from their storage/shipping container for sample collection.

8.4.2 Tubes must be used for sampling within 30 days of conditioning (Reference 4).

8.4.3 During field monitoring, the long-term storage cap at the sampling end of the tube is replaced with a diffusion cap and the whole assembly is arranged vertically, with the sampling end pointing downward, under a protective hood or shield—See Section 6.1 of Method 325A for more details.

8.5 *Sample Storage.*

8.5.1 After sampling, tubes must be immediately resealed with long-term storage caps and placed back inside the type of storage container described in Section 6.4.2.

8.5.2 Exposed tubes may not be placed in the same container as clean tubes. They should not be taken back out of the container until ready for analysis and after they have had time to equilibrate with ambient temperature in the laboratory.

8.5.3 Sampled tubes must be inspected before analysis to identify problems such as loose or missing caps, damaged tubes, tubes that appear to be leaking sorbent or container contamination. Any and all such problems must be documented together with the unique identification number of the tube or tubes concerned. Affected tubes must not be analyzed but must be set aside.

8.5.4 Intact tubes must be analyzed within 30 days of the end of sample collection (within one week for limonene, carene, bis-chloromethyl ether, labile sulfur or nitrogen-containing compounds, and other reactive VOCs).

Note: Ensure ambient temperatures stay below 23 °C during transportation and storage. Refrigeration is not normally required unless the samples contain reactive compounds or cannot be analyzed within 30 days. If refrigeration is used, the atmosphere inside the refrigerator must be clean and free of organic solvents.

9.0 Quality Control

9.1 *Analytical System Blank.* The analytical system must be demonstrated to be contaminant free by carrying out an analysis without a sorbent tube—*i.e.,* by desorbing an empty tube or by desorbing the focusing trap alone. Since no internal standards can be added directly to the empty tube, the system blank must have less than or equal to 0.2 ppbv or three times the detection limit for each target compound, whichever is larger based on the response factors for the continuing calibration verification sample. Perform a system blank analysis at the beginning of each analytical sequence to demonstrate that the secondary trap and TD/GC/MS analytical equipment are free of any significant interferents. Flag all sample data from analytical sequences that fail the system blank check and provide a narrative on how the failure affects the data use.

9.2 *Tube Conditioning.*

9.2.1 Conditioned tubes must be demonstrated to be free of contaminants and interference by running 10 percent of the blank tubes selected at random from each conditioned batch (see Section 8.1).

9.2.2 Confirm that artifacts and background contamination are ≤ 0.2 ppbv or less than three times the detection limit of the procedure or less than 10 percent of the target compound(s) mass that would be collected if airborne concentrations were at the regulated limit value, whichever is larger. Only tubes that meet these criteria can be used for field monitoring, field or laboratory blanks, or for system calibration.

9.2.3 If unacceptable levels of VOCs are observed in the tube blanks, then the processes of tube conditioning and checking the blanks must be repeated.

9.3 *Field and Laboratory Blanks.*

9.3.1 Field and laboratory blank tubes must be prepared from tubes that are identical to those used for field sampling—*i.e.,* they should be from the same batch, have a similar history, and be conditioned at the same time.

9.3.2 At least two laboratory blanks are required per monitoring episode. These laboratory blanks must be stored in the laboratory under clean controlled ambient temperature conditions throughout the monitoring period. Analyze one laboratory blank at the beginning and one at the end of the associated field sample runs.

9.3.3 Laboratory blank/artifact levels must meet the requirements of Section 9.2.2 (see also Table 17.1). Flag all data that do not meet this criterion with a note that associated results are estimated, and likely to be biased high due to laboratory blank background.

9.3.4 Field blanks must be shipped to the monitoring site with the sampling tubes and must be stored at the sampling location throughout the monitoring exercise (see Method 325B). The long-term storage caps must be in place and must be stored outside the shipping container at the sampling location (see Method 325B). The field blanks are then shipped back to the laboratory in the same container as the sampled tubes. One field blank tube is required for every 10 sampled tubes on a monitoring exercise and no less than two field blanks should be collected, regardless of the size of the monitoring study.

9.3.5 Field blanks must contain no greater than one-third of the measured target analyte or compliance limit for field samples (see Table 17.1). Flag all data that do not meet this criterion with a note that the associated results are estimated and likely to be biased high due to field blank background.

9.4 *Duplicate Samples.* Duplicate (collocated) samples collected must be analyzed and reported as part of method quality control. They are used to evaluate sampling and analysis precision. Relevant performance criteria are given in Section 9.9.

9.5 *Method Performance Criteria.* Unless otherwise noted, monitoring method performance specifications must be demonstrated for the target compounds using the procedures described in Addendum A to this method and the statistical approach presented in Method 301.

9.6 *Limit of Detection.* Determine the limit of detection under the analytical conditions selected (see Section 11.3) using the procedure in Section 15 of Method 301. The limit of detection is defined for each system by making seven replicate measurements of a concentration of the compound of interest within a factor of five of the detection limit. Compute the standard deviation for the seven replicate concentrations, and multiply this value by three. The results should demonstrate that the method is able to measure analytes such as benzene at concentrations as low as 10 ppt or 1/3rd (preferably 1/10th) of the lowest concentration of interest, whichever is larger.

Note: Determining the detection limit may be an iterative process as described in 40 CFR part 136, Appendix B.

9.7 *Analytical Bias.* Analytical bias must be demonstrated to be within ±30 percent using Equation 9.1. Analytical bias must be demonstrated during initial setup of this method and as part of the routine, single-level calibration verification carried out with every sequence of 10 samples or less (see Section 9.14). Calibration standard tubes (see Section 10.0) may be used for this purpose.

$$Analytical\ Bias = \frac{(Spiked\ Value - Measured\ Value)}{Spiked\ Value} \times 100 \qquad \text{Eq. 9.1}$$

Where:

Spiked Value = A known mass of VOCs added to the tube.

Measured Value = Mass determined from analysis of the tube.

9.8 *Analytical Precision.* Demonstrate an analytical precision within ±20 percent using Equation 9.2. Analytical precision must be demonstrated during initial setup of this method and at least once per year. Calibration standard tubes may be used (see Section 10.0) and data from daily single-level calibration verification checks may also be applied for this purpose.

$$Analytical\ Precision = \frac{(|A1 - A2|)}{\bar{A}} \times 100 \qquad \text{Eq. 9.2}$$

Where:

A1 = A measurement value taken from one spiked tube.

A2 = A measurement value taken from a second spiked tube.

$\bar{A}$ = The average of A1 and A2.

9.9 *Field Replicate Precision.* Use Equation 9.3 to determine and report replicate precision for duplicate field samples (see Section 9.4). The level of agreement between duplicate field samples is a measure of the precision achievable for the entire sampling and analysis procedure. Flag data sets for which the duplicate samples do not agree within 30 percent.

$$Field\ Precision = \frac{(|F1 - F2|)}{\bar{F}} \times 100 \qquad \text{Eq. 9.3}$$

Where:

F1 = A measurement value (mass) taken from one of the two field replicate tubes used in sampling.

F2 = A measurement value (mass) taken from the second of two field replicate tubes used in sampling.

$\bar{F}$ = The average of F1 and F2.

9.10 *Desorption Efficiency and Compound Recovery.* The efficiency of the thermal desorption method must be determined.

9.10.1 Quantitative (>95 percent) compound recovery must be demonstrated by repeat analyses on a same standard tube.

9.10.2 Compound recovery through the TD system can be demonstrated by comparing the calibration check sample response factor obtained from direct GC injection of liquid standards with that obtained from thermal desorption analysis response factor using the same column under identical conditions.

9.10.3 If the relative response factors obtained for one or more target compounds introduced to the column via thermal desorption fail to meet the criteria in Section 9.10.1, you must adjust the TD parameters to meet the criteria and repeat the experiment. Once the thermal desorption conditions have been optimized, you must repeat this test each time the analytical system is recalibrated to demonstrate continued method performance.

9.11 *Audit Samples.* Certified reference standard samples must be used to audit this procedure (if available). Accuracy within 30 percent must be demonstrated for relevant ambient air concentrations (0.5 to 25 ppb).

9.12 *Mass Spectrometer Tuning Criteria.* Tune the mass spectrometer (if used) according to manufacturer's specifications. Verify the instrument performance by analyzing a 50 ηg injection of bromofluorobenzene. Prior to the beginning of each analytical sequence or every 24 hours during continuous GC/MS operation for this method demonstrate that the bromofluorobenzene tuning performance criteria in Table 9.1 have been met.

TABLE 9.1—GC/MS TUNING CRITERIA [1]

Target mass	Rel. to mass	Lower limit %	Upper limit %
50	95	8	40
75	95	30	66
95	95	100	100
96	95	5	9
173	174	0	2
174	95	50	120
175	174	4	9
176	174	93	101
177	176	5	9

[1] All ion abundances must be normalized to m/z 95, the nominal base peak, even though the ion abundance of m/z 174 may be up to 120 percent that of m/z 95.

9.13 *Routine Calibrations Checks at the Start of a Sequence.* Run single-level calibration checks before each sequence of analyses and after every tenth sample to ensure that the previous multi-level calibration (see Section 10.6.3) is still valid.

9.13.1 The sample concentration used for the routine calibration check should be near the mid-point of the multi-level calibration range.

9.13.2 Quantitation software must be updated with response factors determined from the daily calibration standard. The percent deviation between the initial calibration and the daily calibration check for all compounds must be within 30 percent.

9.14 *Calibration Verification at the End of a Sequence.* Run another single level standard after running each sequence of samples. The initial calibration check for a subsequent set of samples may be used as the final calibration check for a previous analytical sequence, provided the same analytical method is used and the subsequent set of samples is analyzed immediately (within 4 hours) after the last calibration verification.

9.15 *Additional Verification.* Use a calibration check standard from a second, separate source to verify the original calibration at least once every three months.

9.16 *Integration Method.* Document the procedure used for integration of analytical data including field samples, calibration standards and blanks.

9.17 *QC Records.* Maintain all QC reports/records for each TD/GC/MS analytical system used for application of this method. Routine quality control requirements for this method are listed below and summarized in Table 17.1.

10.0 Calibration and Standardization

10.1 Calibrate the analytical system using standards covering the range of analyte masses expected from field samples.

10.2 Analytical results for field samples must fall within the calibrated range of the analytical system to be valid.

10.3 Calibration standard preparation must be fully traceable to primary standards of mass and/or volume, and/or be confirmed using an independent certified reference method.

10.3.1 Preparation of calibration standard tubes from standard atmospheres.

10.3.1.1 Subject to the requirements in Section 7.2.1, low-level standard atmospheres may be introduced to clean, conditioned sorbent tubes in order to produce calibration standards.

10.3.1.2 The standard atmosphere generator or system must be capable of producing sufficient flow at a constant rate to allow the required analyte mass to be introduced within a reasonable time frame and without affecting the concentration of the standard atmosphere itself.

10.3.1.3 The sampling manifold may be heated to minimize risk of condensation but the temperature of the gas delivered to the sorbent tubes may not exceed 100 °F.

10.3.1.4 The flow rates passed through the tube should be in the order of 50–100 ml/min and the volume of standard atmosphere sampled from the manifold or chamber must not exceed the breakthrough volume of the sorbent at the given temperature.

10.4 Preparation of calibration standard tubes from concentrated gas standards.

10.4.1 If a suitable concentrated gas standard (see Section 7.2.2) can be obtained, follow the manufacturer's recommendations relating to suitable storage conditions and product lifetime.

10.4.2 Introduce precise 0.5 to 5.0 ml aliquots of the standard to the sampling end of conditioned sorbent tubes in a 50–100 ml/min flow of pure carrier gas.

Note: This can be achieved by connecting the sampling end of the tube to an unheated GC injector (see Section 6.6) and introducing the aliquot of gas using a suitable gas syringe. Gas sample valves could alternatively be used to meter the standard gas volume.

10.4.3 Each sorbent tube should be left connected to the flow of gas for 2 minutes after standard introduction. As soon as each spiked tube is removed from the injection unit, seal it with long-term storage caps and place it in an appropriate tube storage/transportation container if it is not to be analyzed within 24 hours.

10.5 Preparation of calibration standard tubes from liquid standards.

10.5.1 Suitable standards are described in Section 7.3.

10.5.2 Introduce precise 0.5 to 2 µl aliquots of liquid standards to the sampling end of sorbent tubes in a flow of carrier gas using a precision syringe and an unheated injector (Section 6.6). The flow of gas should be sufficient to completely vaporize the liquid standard.

Note: If the analytes of interest are higher boiling than n-decane, reproducible analyte transfer to the sorbent bed is optimized by allowing the tip of the syringe to gently touch the sorbent retaining gauze at the sampling end of the tube.

10.5.3 Each sorbent tube is left connected to the flow of gas for 5 minutes after liquid standard introduction.

10.5.3.1 As soon as each spiked tube is removed from the injection unit, seal it with long-term storage caps and place it in an appropriate tube storage container if it is not to be analyzed within 24 hours.

Note: In cases where it is possible to selectively purge the solvent from the tube while all target analytes are quantitatively retained, a larger 2 µL injection may be made for optimum accuracy. However, if the solvent cannot be selectively purged and will be present during analysis, the injection volume should be as small as possible (*e.g.,* 0.5 µL) to minimize solvent interference.

Note: This standard preparation technique requires the entire liquid plug including the tip volume be brought into the syringe barrel. The volume in the barrel is recorded, the syringe is inserted into the septum of the spiking apparatus and allowed to warm to the temperature of the injection body. The liquid is then quickly injected. The result is the cool liquid contacts the hot syringe tip and the sample is completely forced into the injector and onto the sorbent cartridge. A bias occurs with this method when sample is drawn continuously up into the syringe to the specified volume and the calibration solution in the syringe tip is ignored.

10.6 Preparation of calibration standard tubes from multiple standards.

10.6.1 If it is not possible to prepare one standard containing all the compounds of interest (*e.g.,* because of chemical reactivity or the breadth of the volatility range), standard tubes can be prepared from multiple gas or liquid standards.

10.6.2 Follow the procedures described in Sections 10.4 and 10.5, respectively, for introducing each gas and/or liquid standard to the tube and load those containing the highest boiling compounds of interest first and the lightest species last.

10.7 Additional requirements for preparation of calibration tubes.

10.7.1 Storage of Calibration Standard Tubes.

10.7.1.1 Seal tubes with long-term storage caps immediately after they have been disconnected from the standard loading manifold or injection apparatus.

10.7.1.2 Calibration standard tubes may be stored for no longer than 30 days and

should be refrigerated if there is any risk of chemical interaction or degradation.

10.8 Keep records for calibration standard tubes to include the following:

10.8.1 The stock number of any commercial liquid or gas standards used.

10.8.2 A chromatogram of the most recent blank for each tube used as a calibration standard together with the associated analytical conditions and date of cleaning.

10.8.3 Date of standard loading.

10.8.4 List of standard components, approximate masses and associated confidence levels.

10.8.5 Example analysis of an identical standard with associated analytical conditions.

10.8.6 A brief description of the method used for standard preparation.

10.8.7 The standard's expiration date.

10.9 TD/GC/MS using standard tubes to calibrate system response.

10.9.1 Verify that the TD/GC/MS analytical system meets the instrument performance criteria given in Section 9.1 and relevant parts of Section 9.5.

10.9.2 The prepared calibration standard tubes must be analyzed using the analytical conditions applied to field samples (see Section 11.0) and must be selected to ensure quantitative transfer and adequate chromatographic resolution of target compounds, surrogates, and internal standards in order to enable reliable identification and quantitation of compounds of interest. The analytical conditions should also be sufficiently stringent to prevent buildup of higher boiling, non-target contaminants that may be collected on the tubes during field monitoring.

10.9.3 Calibration range. Each TD/GC/MS system must be calibrated at five concentrations that span the monitoring range of interest before being used for sample analysis. This initial multi-level calibration determines instrument sensitivity under the analytical conditions selected and the linearity of GC/MS response for the target compounds. One of the calibration points must be within a factor of five of the detection limit for the compounds of interest.

10.9.4 One of the calibration points from the initial calibration curve must be at the same concentration as the daily single-level calibration verification standard (*e.g.,* the mass collected when sampling air at typical concentrations).

10.9.5 Calibration frequency. Each GC/MS system must be recalibrated with a full 5-point calibration curve following corrective action (*e.g.,* ion source cleaning or repair, column replacement) or if the instrument fails the daily calibration acceptance criteria.

10.9.5.1 Single-level calibrations checks must be carried out on a regular routine basis as described in Section 9.6.

10.9.5.2 Quantitation ions for the target compounds are shown in Table 10.1. Use the primary ion unless interferences are present, in which case you should use a secondary ion.

TABLE 10.1—CLEAN AIR ACT VOLATILE ORGANIC COMPOUNDS FOR PASSIVE SORBENT SAMPLING

Compound	CAS No.	BP (°C)	Vapor pressure (mmHg)[a]	MW[b]	Characteristic ion(s)	
					Primary	Secondary
1,1-Dichloroethene	75–35–4	32	500	96.9	61	96
3-Chloropropene	107–05–1	44.5	340	76.5	76	41, 39, 78
1,1,2-Trichloro-1,2,2-trifluoroethane						
1,1-Dichloroethane	75–34–3	57.0	230	99	63	65, 83, 85, 98, 100.
1,2-Dichloroethane	107–06–2	83.5	61.5	99	62	98
1,1,1-Trichloroethane	71–55–6	74.1	100	133.4	97	99, 61
Benzene	71–43–2	80.1	76.0	78	78	
Carbon tetrachloride	56–23–5	76.7	90.0	153.8	117	119
1,2-Dichloropropane	78–87–5	97.0	42.0	113	63	112
Trichloroethene	79–01–6	87.0	20.0	131.4	95	97, 130, 132
1,1,2-Trichloroethane	79–00–5	114	19.0	133.4	83	97, 85
Toluene	108–88–3	111	22.0	92	92	91
Tetrachloroethene	127–18–4	121	14.0	165.8	164	129, 131, 166
Chlorobenzene	108–90–7	132	8.8	112.6	112	77, 114
Ethylbenzene	100–41–4	136	7.0	106	91	106
m,p-Xylene	108–38–3, 106–42–3	138	6.5	106.2	106	91
Styrene	100–42–5	145	6.6	104	104	78
o-Xylene	95–47–6	144	5.0	106.2	106	91
p-Dichlorobenzene	106–46–7	173	0.60	147	146	111, 148

[a] Pressure in millimeters of mercury.
[b] Molecular weight.

11.0 Analytical Procedure

11.1 *Preparation for Sample Analysis.*

11.1.1 Each sequence of analyses must be ordered as follows:

11.1.1.1 A calibration verification.

11.1.1.2 A laboratory blank.

11.1.1.3 Field blank.

11.1.1.4 Sample(s).

11.1.1.5 Field blank.

11.1.1.6 A single-level calibration verification standard tube after 10 field samples.

11.1.1.7 A single-level calibration verification standard tube at the end of the sample batch.

11.2 *Pre-desorption System Checks and Procedures.*

11.2.1 Ensure all sample tubes and field blanks are at ambient temperature before removing them from the storage container.

11.2.2 If using an automated TD/GC/MS analyzer, remove the long-term storage caps from the tubes, replace them with appropriate analytical caps, and load them into the system in the sequence described in Section 11.1. Alternatively, if using a manual system, uncap and analyze each tube, one at a time, in the sequence described in Section 11.1.

11.2.3 The following thermal desorption system integrity checks and procedures are required before each tube is analyzed.

Note: Commercial thermal desorbers should implement these steps automatically.

11.2.3.1 Tube leak test: Each tube must be leak tested as soon as it is loaded into the carrier gas flow path before analysis to ensure data integrity.

11.2.3.2 Conduct the leak test at the GC carrier gas pressure, without heat or gas flow applied. Tubes that fail the leak test should not be analyzed, but should be resealed and stored intact. On automated systems, the instrument should continue to leak test and analyze subsequent tubes after a given tube has failed. Automated systems must also store and record which tubes in a sequence have failed the leak test. Information on failed tubes should be downloaded with the batch of sequence information from the analytical system.

11.2.3.3 Leak test the sample flow path. Leak check the sample flow path of the thermal desorber before each analysis without heat or gas flow applied to the

sample tube. Stop the automatic sequence of tube desorption and GC analysis if any leak is detected in the main sample flow path. This process may be carried out as a separate step or as part of Section 11.2.3.2.

11.2.4 Optional dry purge.

11.2.4.1 Tubes may be dry purged with a flow of pure dry gas passing into the tube from the sampling end, to remove water vapor and other very volatile interferents if required.

11.2.5 Internal standard (IS) addition.

11.2.5.1 Use the internal standard addition function of the automated thermal desorber (if available) to introduce a precise aliquot of the internal standard to the sampling end of each tube after the leak test and shortly before primary (tube) desorption).

Note: This step can be combined with dry purging the tube (Section 11.2.4) if required.

11.2.5.2 If the analyzer does not have a facility for automatic IS addition, gas or liquid internal standard can be manually introduced to the sampling end of tubes in a flow of carrier gas using the types of procedure described in Sections 10.3 and 10.4, respectively.

11.2.6 Pre-purge. Each tube should be purged to vent with carrier gas flowing in the desorption direction (*i.e.,* flowing into the tube from the non-sampling end) to remove oxygen before heat is applied. This is to prevent analyte and sorbent oxidation and to prevent deterioration of key analyzer components such as the GC column and mass spectrometer (if applicable). A series of schematics illustrating these steps is presented in Figures 17.2 and 17.3.

11.3 *Analytical Procedure.*

11.3.1 *Steps Required for Thermal Desorption.*

11.3.1.1 Ensure that the pressure and purity of purge and carrier gases supplying the TD/GC/MS system, meet manufacturer specifications and the requirements of this method.

11.3.1.2 Ensure also that the analytical method selected meets the QC requirements of this method (Section 9) and that all the analytical parameters are at set point.

11.3.1.3 Conduct predesorption system checks (see Section 11.2).

11.3.1.4 Desorb the sorbent tube under conditions demonstrated to achieve >95 percent recovery of target compounds (see Section 9.5.2).

Note: Typical tube desorption conditions range from 280–350 °C for 5–15 minutes with a carrier gas flow of 30–100 mL/min passing through the tube from the non-sampling end such that analytes are flushed out of the tube from the sampling end. Desorbed VOCs are concentrated (refocused) on a secondary, cooled sorbent trap integrated into the analytical equipment (see Figure 17.4). The focusing trap is typically maintained at a temperature between −30 and +30 °C during focusing. Selection of hydrophobic sorbents for focusing and setting a trapping temperature of +25 to 27 °C aid analysis of humid samples because these settings allow selective elimination of any residual water from the system, prior to GC/MS analysis.

Note: The transfer of analytes from the tube to the focusing trap during primary (tube) desorption can be carried out splitless or under controlled split conditions (see Figure 17.4) depending on the masses of target compounds sampled and the requirements of the system—sensitivity, required calibration range, column overload limitations, etc. Instrument controlled sample splits must be demonstrated by showing the reproducibility using calibration standards. Field and laboratory blank samples must be analyzed at the same split as the lowest calibration standard. During secondary (trap) desorption the focusing trap is heated rapidly (typically at rates > 40 °C/s) with inert (carrier) gas flowing through the trap (3–100 mL/min) in the reverse direction to that used during focusing.

11.3.1.5 The split conditions selected for optimum field sample analysis must also be demonstrated on representative standards.

Note: Typical trap desorption temperatures are in the range 250–360 °C, with a ''hold'' time of 1–3 minutes at the highest temperature. Trap desorption automatically triggers the start of GC analysis. The trap desorption can also be carried out under splitless conditions (*i.e.,* with everything desorbed from the trap being transferred to the analytical column and GC detector) or, more commonly, under controlled split conditions (see Figure 17.4). The selected split ratio depends on the masses of target compounds sampled and the requirements of the system—sensitivity, required calibration range, column overload limitations, etc. If a split is selected during both primary (trap) desorption and secondary (trap) desorption, the overall split ratio is the product of the two. Such 'double' split capability gives optimum flexibility for accommodating concentrated samples as well as trace-level samples on the TD/GC/MS analytical system. High resolution capillary columns and most GC/MS detectors tend to work best with approximately 20–200 ng per compound per tube to avoid saturation. The overall split ratio must be adjusted such that, when it is applied to the sample mass that is expected to be collected during field monitoring, the amount reaching the column will be attenuated to fall within this range. As a rule of thumb this means that ~20 ng samples will require splitless or very low split analysis, ~2 µg samples will require a split ratio in the order of ~50:1 and 200 µg samples will require a double split method with an overall split ratio in the order of 2,000:1.

11.3.1.6 Analyzed tubes must be resealed with long-term storage caps immediately after analysis (manual systems) or after completion of a sequence (automated systems). This prevents contamination, minimizing the extent of tube reconditioning required before subsequent reuse.

11.3.2 *GC/MS Analytical Procedure.*

11.3.2.1 Heat/cool the GC oven to its starting set point.

11.3.2.2 If using a GC/MS system, it can be operated in either MS-Scan or MS–SIM mode (depending on required sensitivity levels and the type of mass spectrometer selected). As soon as trap desorption and transfer of analytes into the GC column triggers the start of the GC/MS analysis, collect mass spectral data over a range of masses from 35 to 300 amu. Collect at least 10 data points per eluting chromatographic peak in order to adequately integrate and quantify target compounds.

11.3.2.3 Use secondary ion quantitation only when there are sample matrix interferences with the primary ion. If secondary ion quantitation is performed, flag the data and document the reasons for the alternative quantitation procedure.

11.3.2.4 Whenever the thermal desorption—GC/MS analytical method is changed or major equipment maintenance is performed, you must conduct a new five-level calibration (see Section 10.6.3). System calibration remains valid as long as results from subsequent routine, single-level calibration verification standards are within 30 percent of the most recent 5-point calibration (see Section 10.9.5). Include relevant routine, single-level calibration data in the supporting information in the data report for each set of samples.

11.3.2.5 Document, flag and explain all sample results that exceed the calibration range. Report flags and provide documentation in the analytical results for the affected sample(s).

12.0 Data Analysis, Calculations, and Reporting

12.1 *Recordkeeping Procedures for Sorbent Tubes.*

12.1.1 Label sample tubes with a unique identification number as described in Section 6.3.

12.1.2 Keep records of the tube numbers and sorbent lots used for each sampling episode.

12.1.3 Keep records of sorbent tube packing if tubes are manually prepared in the laboratory and not supplied commercially. These records must include the masses and/or bed lengths of sorbent(s) contained in each tube, the maximum allowable temperature for that tube and the date each tube was packed. If a tube is repacked at any stage, record the date of tube repacking and any other relevant information required in Section 12.1.

12.1.4 Keep records of the conditioning and blanking of tubes. These records must include, but are not limited to, the unique identification number and measured background resulting from the tube conditioning.

12.1.5 Record the location, dates, tube identification and times associated with each sample collection. Record this information on a Chain of Custody form that is sent to the analytical laboratory.

12.1.6 Field sampling personnel must complete and send a Chain of Custody to the analysis laboratory (see Section 8.6.4 of Method 325A for what information to include and Section 17.0 of this method for an example form). Duplicate copies of the Chain of Custody must be included with the sample report and stored with the field test data archive.

12.1.7 Field sampling personnel must also keep records of the daily unit vector wind direction, daily average temperature, and daily average barometric pressure for the sample collection period. See Section 8.6.5 of Method 325A.

12.1.8 Laboratory personnel must record the sample receipt date, and analysis date.

12.1.9 Laboratory personnel must maintain records of the analytical method and sample results in electronic or hardcopy in sufficient detail to reconstruct the calibration, sample, and quality control results from each sampling episode.

12.2 *Calculations.*

12.2.1 Complete the calculations in this section to determine compliance with calibration quality control criteria (see also Table 17.1).

12.2.1.1 Response factor (RF). Calculate the RF using Equation 12.1:

$$RF = \frac{[A_s \times M_{is}]}{[A_{is} \times M_s]} \qquad \text{Eq. 12.1}$$

Where:

A_s = Peak area for the characteristic ion of the analyte.

A_{is} = Peak area for the characteristic ion of the internal standard.

M_s = Mass of the analyte.

M_{is} = Mass of the internal standard.

12.2.1.2 Standard deviation of the response factors (SD_{RF}). Calculate the SD_{RF} using Equation 12.2:

$$SD_{RF} = \sqrt{\frac{\sum_{i=1}^{n}\left(RF_i - \overline{RF}\right)^2}{(n-1)}} \qquad \text{Eq. 12.2}$$

Where:

RF_i = RF for each of the calibration compounds.

RF = Mean RF for each compound from the initial calibration.

n = Number of calibration standards.

12.2.1.3 Percent deviation (%DEV). Calculate the %DEV using Equation 12.3:

$$\%DEV = SD_{RF} \div \overline{RF} \times 100 \qquad \text{Eq. 12.3}$$

Where:

SD_{RF} = Standard deviation.

RF = Mean RF for each compound from the initial calibration.

12.2.1.4 Relative percent difference (RPD). Calculate the RPD using Equation 12.4:

$$RPD = \frac{R1 - R2}{[(R1 + R2)/2]} \times 100 \qquad \text{Eq. 12.4}$$

Where:

R1, R2 = Values that are being compared (*i.e.,* response factors in calibration verification).

12.2.2 Determine the equivalent concentration of compounds in atmospheres as follows.

12.2.3 For passive sorbent tube samples, calculate the concentration of the target compound(s) in the sampled air, in μg/m³ by using Equation 12.5 (Reference 21).

$$C_m = \frac{m_{meas}}{U \times t} \times 10^6 \qquad \text{Eq. 12.5}$$

Where:

C_m = The concentration of target compound in the air sampled (μg/m³).

m_{meas} = The mass of the compound as measured in the sorbent tube (μg).

U = The diffusive uptake rate (sampling rate) (mL/min).

t = The exposure time (minutes).

Note: Diffusive uptake rates for common VOCs, using carbon sorbents packed into sorbent tubes of the dimensions specified in Section 6.1, are listed in Table 12.1. Adjust analytical conditions to keep expected sampled masses within range (see Sections 11.3.1.3 to 11.3.1.5). Best possible limits of detection are typically in the order of 0.1 ppb for 1,3-butadiene and 0.05 ppb for volatile aromatics such as benzene for 14-day monitoring. However, actual detection limits will depend upon the analytical conditions selected.

TABLE 12.1—VALIDATED SORBENTS AND UPTAKE RATES FOR SELECTED CLEAN AIR ACT COMPOUNDS

Compound	Carbopack X uptake rate (ml/min) [a]
1,1-Dichloroethene	0.57±0.14
3-Chloropropene	0.51±0.3
1,1-Dichloroethane	0.57±0.1
1,2-Dichloroethane	0.57±0.08
1,1,1-Trichloroethane	0.51±0.1
Benzene	0.66±0.06
Carbon tetrachloride	0.51±0.06
1,2-Dichloropropane	0.52±0.1

TABLE 12.1—VALIDATED SORBENTS AND UPTAKE RATES FOR SELECTED CLEAN AIR ACT COMPOUNDS—Continued

Compound	Carbopack X uptake rate (ml/min) [a]
Trichloroethene	0.5±0.05
1,1,2-Trichloroethane	0.49±0.13
Toluene	0.52±0.14
Tetrachloroethene	0.48±0.05
Chlorobenzene	0.51±0.06
Ethylbenzene	0.46±0.07
m,p-Xylene	0.46±0.09
Styrene	0.5±0.14
o-Xylene	0.46±0.12

TABLE 12.1—VALIDATED SORBENTS AND UPTAKE RATES FOR SELECTED CLEAN AIR ACT COMPOUNDS—Continued

Compound	Carbopack X uptake rate (ml/min) [a]
p-Dichlorobenzene	0.45±0.05

[a] Reference 3, McClenny, J. Environ. Monit. 7:248–256.

12.2.4 Correct target concentrations determined at the sampling site temperature and atmospheric pressure to standard conditions (25 °C and 760 mm mercury) using Equation 12.6 (Reference 22).

$$U_{NTP} = U \times \left(\frac{298.2}{t_{ss}}\right)^{\frac{3}{2}} \times \left(\frac{P_{ss}}{760}\right) \qquad \text{Eq. 12.6}$$

Where:

t_{ss} = The temperature at the sampling site (K).

P_{ss} = The pressure at the sampling site (mm Hg).

13.0 Method Performance

The performance of this procedure for VOC not listed in Table 12.1 is determined using the procedure in Addendum A of this Method.

13.1 The valid range for measurement of VOC is approximately 0.5 µg/m³ to 5 mg/m³ in air, collected over a 14-day sampling period. The upper limit of the useful range depends on the split ratio selected (Section 11.3.1) and the dynamic range of the analytical system. The lower limit of the useful range depends on the noise from the analytical instrument detector and on the blank level of target compounds or interfering compounds on the sorbent tube (see Section 13.3).

13.2 Diffusive sorbent tubes compatible with passive sampling and thermal desorption methods have been evaluated at relatively high atmospheric concentrations (*i.e.,* mid-ppb to ppm) and published for use in workplace air and industrial/mobile source emissions (References 15–16, 21–22).

13.3 Best possible detection limits and maximum quantifiable concentrations of air pollutants range from sub-part-per-trillion (sub-ppt) for halogenated species such as CCl_4 and the freons using an electron capture detector (ECD), SIM Mode GC/MS, triple quad MS or GC/TOF MS to sub-ppb for volatile hydrocarbons collected over 72 hours followed by analysis using GC with quadrupole MS operated in the full SCAN mode.

13.3.1 Actual detection limits for atmospheric monitoring vary depending on several key factors. These factors are:

- Minimum artifact levels.
- GC detector selection.
- Time of exposure for passive sorbent tubes.
- Selected analytical conditions, particularly column resolution and split ratio.

14.0 Pollution Prevention

This method involves the use of ambient concentrations of gaseous compounds that post little or no danger of pollution to the environment.

15.0 Waste Management

Dispose of expired calibration solutions as hazardous materials. Exercise standard laboratory environmental practices to minimize the use and disposal of laboratory solvents.

16.0 References

1. Winberry, W.T. Jr., et al., Determination of Volatile Organic Compounds in Ambient Air Using Active Sampling onto Sorbent Tubes: Method TO–17r, Second Edition, U.S. Environmental Protection Agency, Research Triangle Park, NC 27711, January 1999. *http://www.epa.gov/ttnamti1/airtox.html#compendium.*
2. Ciccioli, P., Brancaleoni, E., Cecinato, A., Sparapini, R., and Frattoni, M., ''Identification and Determination of Biogenic and Anthropogenic VOCs in Forest Areas of Northern and Southern Europe and a Remote Site of the Himalaya Region by High-resolution GC–MS,'' J. of Chrom., 643, pp 55–69, 1993.
3. McClenny, W.A., K.D. Oliver, H.H. Jacumin, Jr., E.H. Daughtrey, Jr., D.A. Whitaker. 2005. 24 h diffusive sampling of toxic VOCs in air onto Carbopack X solid adsorbent followed by thermal desorption/GC/MS analysis— laboratory studies. J. Environ. Monit. 7:248–256.
4. Markes International (*www.markes.com/publications*): Thermal desorption Technical Support Note 2: Prediction of uptake rates for diffusive tubes.
5. Ciccioli, P., Brancaleoni, E., Cecinato, A., DiPalo, C., Brachetti, A., and Liberti, A., ''GC Evaluation of the Organic Components Present in the Atmosphere at Trace Levels with the Aid of Carbopack™ B for Preconcentration of the Sample,'' J. of Chrom., 351, pp 433–449, 1986.
6. Broadway, G.M., and Trewern, T., ''Design Considerations for the Optimization of a Packed Thermal Desorption Cold Trap for Capillary Gas Chromatography,'' Proc. 13th Int'l Symposium on Capil. Chrom., Baltimore, MD, pp 310–320, 1991.
7. Broadway, G.M., ''An Automated System for use Without Liquid Cryogen for the Determination of VOC's in Ambient Air,'' Proc. 14th Int'l. Symposium on Capil. Chrom., Baltimore, MD, 1992.
8. Gibitch, J., Ogle, L., and Radenheimer, P., ''Analysis of Ozone Precursor Compounds in Houston, Texas Using Automated Continuous GCs,'' in Proceedings of the Air and Waste Management Association Conference: Measurement of Toxic and Related Air Pollutants, Air and Waste Management Association, Pittsburgh, PA, May 1995.
9. Vandendriessche, S., and Griepink, B., ''The Certification of Benzene, Toluene and m-Xylene Sorbed on Tenax TA in Tubes,'' CRM–112 CEC, BCR, EUR12308 EN, 1989.
10. MDHS 2 (Acrylonitrile in Air), ''Laboratory Method Using Porous Polymer Adsorption Tubes, and Thermal Desorption with Gas Chromatographic Analysis,'' Methods for the Determination of Hazardous Substances (MDHS), UK Health and Safety Executive, Sheffield, UK.
11. MDHS 22 (Benzene in Air), ''Laboratory Method Using Porous Polymer Adsorbent Tubes, Thermal Desorption and Gas Chromatography,'' Method for the Determination of Hazardous Substances (MDHS), UK Health and Safety Executive, Sheffield, UK.
12. MDHS 23 (Glycol Ether and Glycol Acetate Vapors in Air), ''Laboratory Method Using Tenax Sorbent Tubes, Thermal Desorption and Gas Chromatography,'' Method for the Determination of Hazardous Substances (MDHS), UK Health and Safety Executive, Sheffield, UK.
13. MDHS 40 (Toluene in air), ''Laboratory Method Using Pumped Porous Polymer Adsorbent Tubes, Thermal Desorption and Gas Chromatography,'' Method for the Determination of Hazardous Substances (MDHS), UK Health and Safety Executive, Sheffield, UK.
14. MDHS 60 (Mixed Hydrocarbons (C to C) in Air), ''Laboratory Method Using Pumped Porous Polymer 3 10 and Carbon Sorbent Tubes, Thermal Desorption and Gas Chromatography,'' Method for the Determination of Hazardous Substances (MDHS), UK

Health and Safety Executive, Sheffield, UK.
15. Price, J. A., and Saunders, K. J., ''Determination of Airborne Methyl tert-Butyl Ether in Gasoline Atmospheres,'' Analyst, Vol. 109, pp. 829–834, July 1984.
16. Coker, D. T., van den Hoed, N., Saunders, K. J., and Tindle, P. E., ''A Monitoring Method for Gasoline Vapour Giving Detailed Composition,'' Ann. Occup, Hyg., Vol 33, No. 11, pp. 15–26, 1989.
17. DFG, ''Analytische Methoden zur prufing gesundheitsschadlicher Arbeistsstoffe,'' Deutsche Forschungsgemeinschaft, Verlag Chemie, Weinheim FRG, 1985.
18. NNI, ''Methods in NVN Series (Luchtkwaliteit; Werkplekatmasfeer),'' Nederlands Normailsatie—Institut, Delft, The Netherlands, 1986–88.
19. ''Sampling by Solid Adsorption Techniques,'' Standards Association of Australia Organic Vapours, Australian Standard 2976, 1987.
20. Woolfenden, E. A., ''Monitoring VOCs in Air Using Pumped Sampling onto Sorbent Tubes Followed by Thermal Desorption-capillary GC Analysis: Summary of Reported Data and Practical Guidelines for Successful Application,'' J. Air & Waste Manage. Assoc., Vol. 47, 1997, pp. 20–36.
21. ASTM D4597–10, Standard Practice for Sampling Workplace Atmospheres to collect Gases or Vapors with Solid Sorbent Diffusive Samplers.
22. Validation Guidelines for Air Sampling Methods Utilizing Chromatographic Analysis, OSHA T–005, Version 3.0, May 2010, *http://www.osha.gov/dts/sltc/methods/chromguide/chromguide.pdf.*
23. Martin, *http://www.hsl.gov.uk/media/1619/issue14.pdf.*
24. BS EN 14662–4:2005, Ambient air quality—Standard method for the measurement of benzene concentrations—Part 4: Diffusive sampling followed by thermal desorption and gas chromatography.
25. ISO 16017–2:2003: Indoor, ambient and workplace air—Sampling and analysis of volatile organic compounds by sorbent tube/thermal desorption/capillary gas chromatography—Part 2: Diffusive sampling.

17.0 Tables, Diagrams, Flowcharts and Validation Data

TABLE 17.1—SUMMARY OF GC/MS ANALYSIS QUALITY CONTROL PROCEDURES

Parameter	Frequency	Acceptance criteria	Corrective action
Bromofluorobenzene Instrument Tune Performance Check.	Daily [a] prior to sample analysis	Evaluation criteria presented in Section 9.5 and Table 9.2.	1) Retune and or 2) Perform Maintenance.
Five point calibration bracketing the expected sample concentration.	Following any major change, repair or maintenance or if daily CCV does not meet method requirements. Recalibration not to exceed three months.	1) Percent Deviation (%DEV) of response factors ±30%.	1) Repeat calibration sample analysis.
		2) Relative Retention Times (RRTs) for target peaks ±0.06 units from mean RRT.	2) Repeat linearity check
			3) Prepare new calibration standards as necessary and repeat analysis.
Calibration Verification (CCV Second source calibration verification check).	Following the calibration curve	The response factor ±30% DEV from calibration curve average response factor.	1) Repeat calibration check
			2) Repeat calibration curve.
System Blank Analysis	Daily [a] following bromofluorobenzene and calibration check; prior to sample analysis.	1) ≤0.2 ppbv per analyte or ≤3 times the LOD, whichever is greater.	1) Repeat analysis with new blank tube.
		2) Internal Standard (IS) area response ±40% and IS Retention Time (RT) ±0.33 min. of most recent calibration check.	2) Check system for leaks, contamination.
			3) Analyze additional blank.
Blank Sorbent Tube Certification	One tube analyzed for each batch of tubes cleaned or 10 percent of tubes whichever is greater.	<0.2 ppbv per VOC targeted compound or 3 times the LOD, whichever is greater.	Reclean all tubes in batch and reanalyze.
Samples—Internal Standards	All samples	IS area response ±40% and IS RT ±0.33 min. of most recent calibration validation.	Flag Data for possible invalidation.

[a] Every 24 hours.

Method 325 A/B

EXAMPLE FIELD TEST DATA SHEET (FTDS)
AND
CHAIN OF CUSTODY

I. GENERAL INFORMATION

SITE NAME:

_____

SITE LOCATION ADDRESS:

_____

CITY: _____ STATE: _____ ZIP: _____

II. SAMPLING DATA

Sample ID (Tube) #	Sorbent	Sample or blank	Start Date	Start Time	Stop Date	Stop Time	Location (gps)	Ambient Temp. (°F)	Barometric Pressure (in. Hg)

III. CUSTODY INFORMATION

COLLECTED BY: _____
Relinquished to Shipper -
Name: _____ Date: _____ Time _____
Received by Laboratory -
Name _____ Date: _____ Time _____
Sample condition upon receipt:

_____

Analysis Required:

_____

_____

Comments:

_____

_____

_____

Figure 17.1. Example Field Data From and Chain of Custody

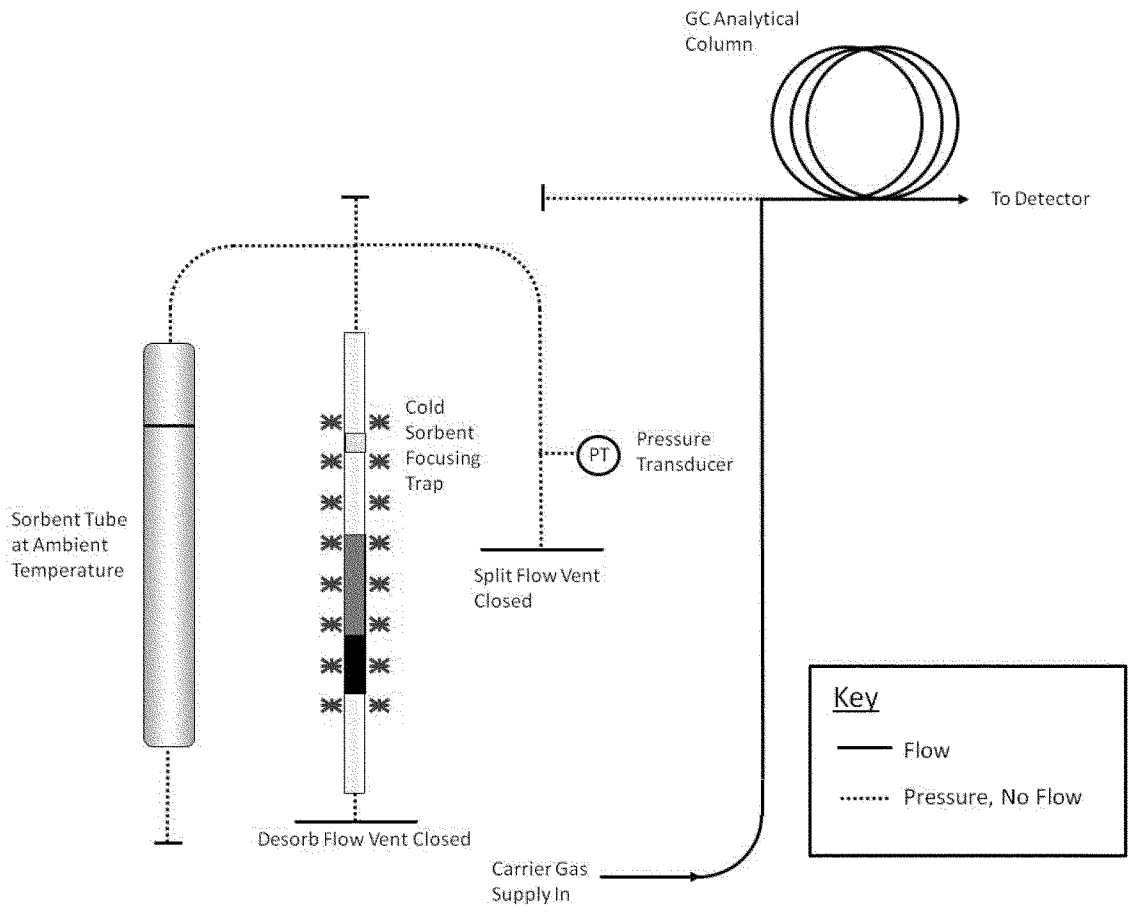

Figure 17.2. Schematic of Thermal Desorption Flow Path During Leak Testing

BILLING CODE 6560–50–P

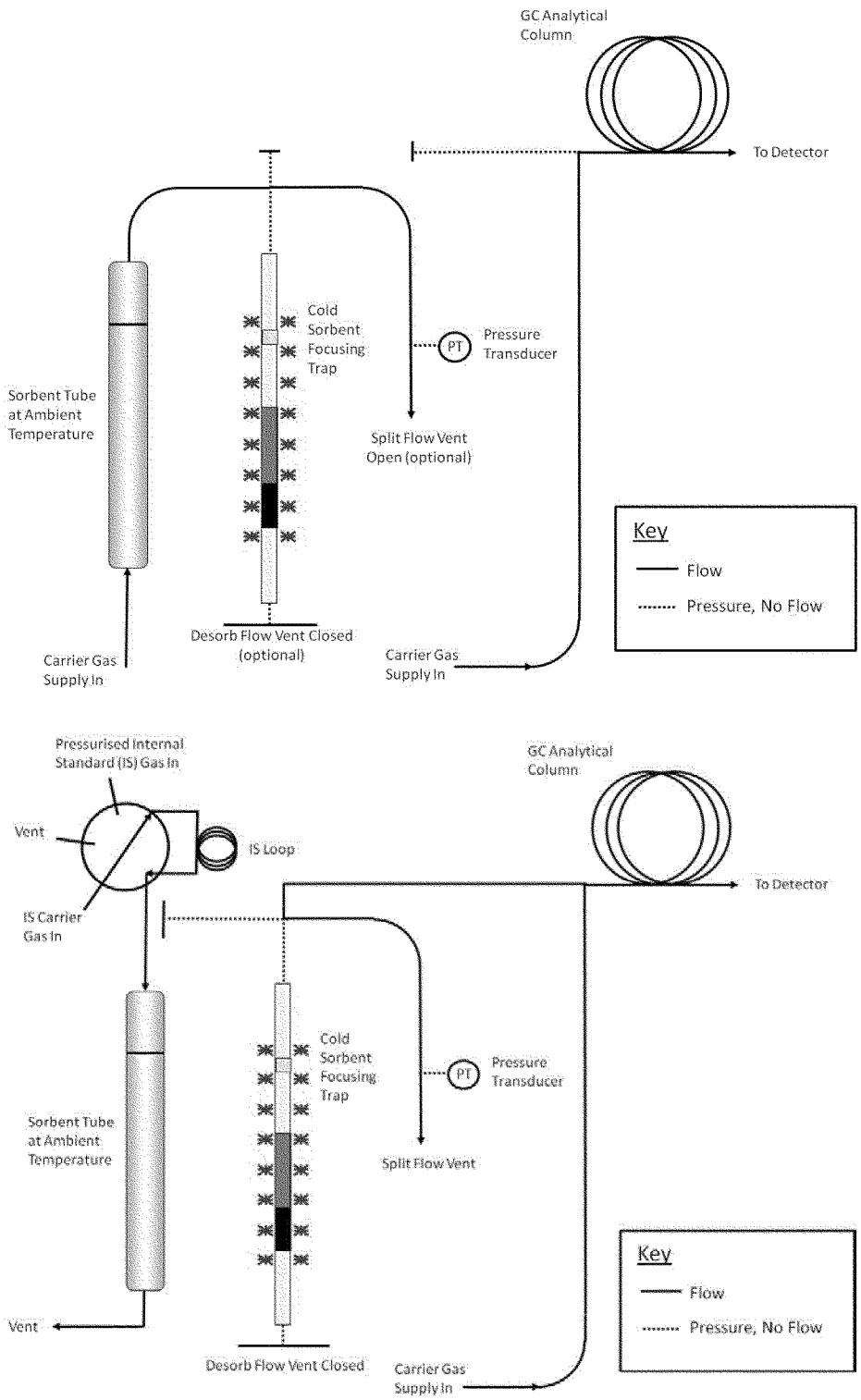

Figure 17.3. Schematic of Thermal Desorption Flow During Purge of Air (Top) and Addition of IS Gas to the Sorbent Tube (Bottom)

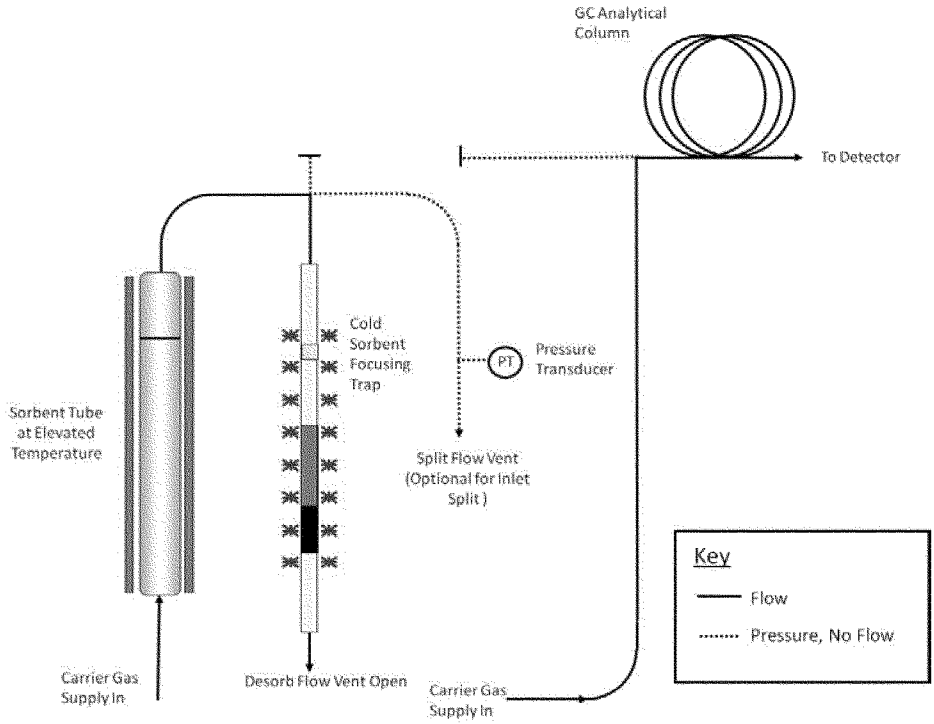

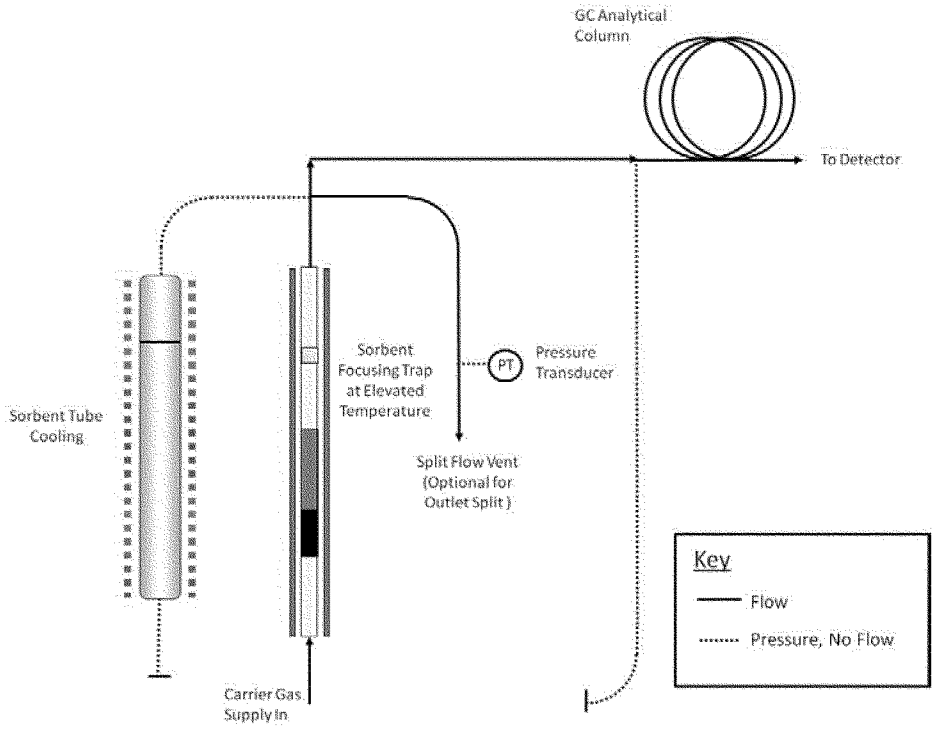

Figure 17.4. Schematic of Thermal Desorption Flow Path During Primary (Tube) Desorption (Top) and Secondary (Trap) Desorption and Transfer to the GC (Bottom)

BILLING CODE 6560–50–C

Addendum A to Method 325B—Method 325 Performance Evaluation

A.1 Scope and Application

A.1.1 To be measured by Methods 325A and 325B, each new target volatile organic compound (VOC) or sorbent that is not listed in Table 12.1 must be evaluated by exposing the selected sorbent tube to a known concentration of the target compound(s) in an exposure chamber following the procedure in this Addendum, unless the compound or

sorbent has already been validated and reported in one of the following national/international standard methods: ISO 16017–2:2003 (incorporated by reference—see § 63.14), ASTM D6196–03(2009) (incorporated by reference—see § 63.14), or BS EN 14662–4:2005 (incorporated by reference—see § 63.14), or in peer-reviewed open literature.

A.1.2 You must determine the uptake rate and the relative standard deviation compared to the theoretical concentration of volatile material in the exposure chamber for each of the tests required in this method. If data that meet the requirement of this Addendum are available in the peer reviewed open literature for VOCs of interest collected on your passive sorbent tube configuration, then such data may be submitted in lieu of the testing required in this Addendum.

A.1.3 You must expose sorbent tubes in a test chamber to parts per trillion by volume (pptv) and low parts per billion by volume (ppbv) concentrations of VOCs in humid atmospheres to determine the sorbent tube uptake rate and to confirm compound capture and recovery.

A.2 Summary of Method

A.2.1 Known concentrations of VOC are metered into an exposure chamber containing sorbent tubes filled with media selected to capture the volatile organic compounds of interest (see Figure A.1 for an example exposure chamber). VOC are diluted with humid air and the chamber is allowed to equilibrate for 6 hours. Clean passive sampling devices are placed into the chamber and exposed for a measured period of time. The passive uptake rate of the passive sampling devices is determined using the standard and dilution gas flow rates. Chamber concentrations are confirmed with active SUMMA canister sampling.

A.2.2 An exposure chamber and known gas concentrations must be used to challenge and evaluate the collection and recovery of target compounds from the sorbent and tube selected to perform passive measurements of VOC in atmospheres.

A.3 Definitions

A.3.1 *cc* is cubic centimeter.

A.3.2 *ECD* is electron capture detector.

A.3.3 *FID* is flame ionization detector.

A.3.4 *LED* is light-emitting diode.

A.3.5 *MFC* is mass flow controller.

A.3.6 *MFM* is mass flow meter.

A.3.7 *min* is minute.

A.3.8 *ppbv* is parts per billion by volume.

A.3.9 *ppmv* is parts per million by volume.

A.3.10 *PSD* is passive sampling device.

A.3.11 *psig* is pounds per square inch gauge.

A.3.12 *RH* is relative humidity.

A.3.13 *VOC* is volatile organic compound.

A.4 Interferences

A.4.1 VOC contaminants in water can contribute interference or bias results high. Use only distilled, organic-free water for dilution gas humidification.

A.4.2 Solvents and other VOC-containing liquids can contaminate the exposure chamber. Store and use solvents and other VOC-containing liquids in the exhaust hood when exposure experiments are in progress to prevent the possibility of contamination of VOCs into the chamber through the chamber's exhaust vent.

Note: Whenever possible, passive sorbent evaluation should be performed in a VOC free laboratory.

A.4.3 PSDs should be handled by personnel wearing only clean, white cotton or powder free nitrile gloves to prevent contamination of the PSDs with oils from the hands.

A.4.4 This performance evaluation procedure is applicable to only volatile materials that can be measured accurately with SUMMA canisters. Alternative methods to confirm the concentration of volatile materials in exposure chambers are subject to Administrator approval.

A.5 Safety

A.5.1 This procedure does not address all of the safety concerns associated with its use. It is the responsibility of the user of this standard to establish appropriate field and laboratory safety and health practices and determine the applicability of regulatory limitations prior to use.

A.5.2 Laboratory analysts must exercise appropriate care in working with high-pressure gas cylinders.

A.6 Equipment and Supplies

A.6.1 You must use an exposure chamber of sufficient size to simultaneously generate a minimum of four exposed sorbent tubes.

A.6.2 Your exposure chamber must not contain VOC that interfere with the compound under evaluation. Chambers made of glass and/or stainless steel have been used successfully for measurement of known concentration of selected VOC compounds.

A.6.3 The following equipment and supplies are needed:

- Clean, white cotton or nitrile gloves;
- Conditioned passive sampling device tubes and diffusion caps; and
- NIST traceable high resolution digital gas mass flow meters (MFMs) or flow controllers (MFCs).

A.7 Reagents and Standards

A.7.1 You must generate an exposure gas that contains between 35 and 75 percent relative humidity and a concentration of target compound(s) within 2 to 5 times the concentration to be measured in the field.

A.7.2 Target gas concentrations must be generated with certified gas standards and diluted with humid clean air. Dilution to reach the desired concentration must be done with zero grade air or better.

A.7.3 The following reagents and standards are needed:

- Distilled water for the humidification;
- VOC standards mixtures in high-pressure cylinder certified by the supplier (**Note:** The accuracy of the certified standards has a direct bearing on the accuracy of the measurement results. Typical vendor accuracy is ±5 percent accuracy but some VOC may only be available at lower accuracy (*e.g.,* acrolein at 10 percent); and
- Purified dilution air less than 0.2 ppbv of the target VOC.

A.8 Sample Collection, Preservation and Storage

A.8.1 You must use certified gas standards diluted with humid air. Generate humidified air by adding distilled organic free water to purified or zero grade air. Humidification may be accomplished by quantitative addition of water to the air dilution gas stream in a heated chamber or by passing purified air through a humidifying bubbler. You must measure the relative humidity in the test gas as part of the record of the passive sorbent sampler evaluation.

Note: The RH in the exposure chamber is directly proportional to the fraction of the purified air that passes through the water in the bubbler before entering the exposure chamber. Achieving uniform humidification in the proper range is a trial-and-error process with a humidifying bubbler. You may need to heat the bubbler to achieve sufficient humidity. An equilibration period of approximately 15 minutes is required following each adjustment of the air flow through the humidifier. Several adjustments or equilibration cycles may be required to achieve the desired RH level.

Note: You will need to determine both the dilution rate and the humidification rate for your design of the exposure chamber by trial and error before performing method evaluation tests.

A.8.2 Prepare and condition sorbent tubes following the procedures in Method 325B Section 7.0.

A.8.3 You must verify that the exposure chamber does not leak.

A.8.4 You must complete two evaluation tests using a minimum of eight passive sampling tubes in each test with less than 5-percent depletion of test analyte by the samplers.

A.8.4.1 Perform at least one evaluation at five times the estimated analytical detection limit or less.

A.8.4.2 Perform second evaluation at a concentration equivalent to the middle of the analysis calibration range.

A.8.5 You must evaluate the samplers in the test chamber operating between 35 percent and 50 percent RH, and at 25 ±5 °C. Allow the exposure chamber to equilibrate for 6 hours before starting an evaluation.

A.8.6 The flow rate through the chamber must equal 100 percent of the volume of the chamber per minute (*i.e.,* one chamber air change per minute) and be ≤ 0.5 meter per second face velocity across the sampler face.

A.8.7 Place clean, ready to use sorbent tubes into the exposure chamber for predetermined amounts of time to evaluate collection and recovery from the tubes. The exposure time depends on the concentration of volatile test material in the chamber and the detection limit required for the sorbent tube sampling application. Exposure time should match sample collection time. The sorbent tube exposure chamber time may not be less than 24 hours and should not be longer than 2 weeks.

A.8.7.1 To start the exposure, place the clean PSDs equipped with diffusion caps on the tube inlet into a retaining rack.

A.8.7.2 Place the entire retaining rack inside the exposure chamber with the diffusive sampling end of the tubes facing

into the chamber flow. Seal the chamber and record the exposure start time, chamber RH, chamber temperature, PSD types and numbers, orientation of PSDs, and volatile material mixture composition (see Figure A.2).

A.8.7.3 Diluted, humidified target gas must be continuously fed into the exposure chamber during cartridge exposure. Measure the flow rate of target compound standard gas and dilution air to an accuracy of 5 percent.

A.8.7.4 Record the time, temperature, and RH at hourly intervals or at the beginning, middle, and end of the exposure time, whichever is greater.

A.8.7.5 At the end of the exposure time, remove the PSDs from the exposure chamber. Record the exposure end time, chamber RH, and temperature.

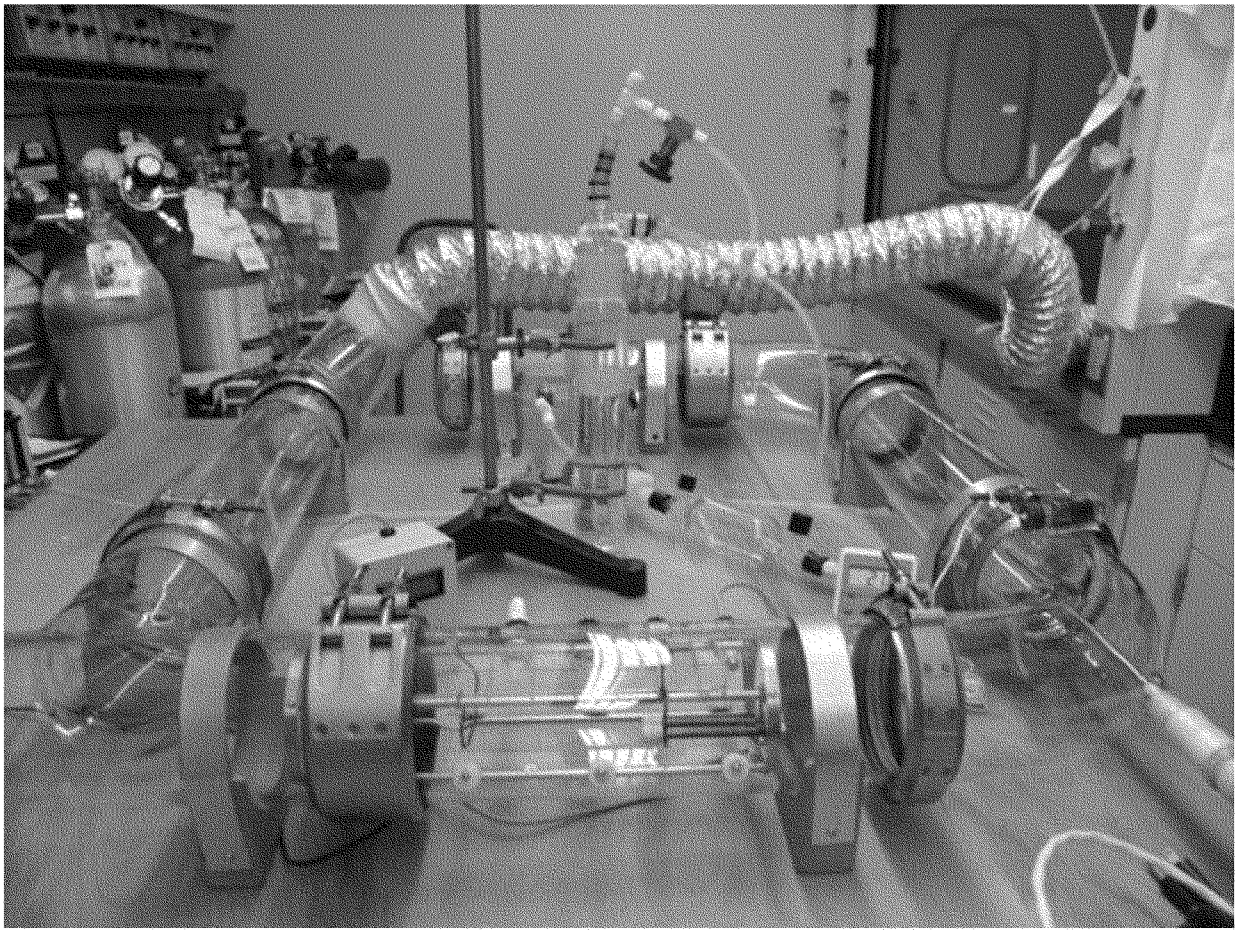

Figure A.1. Example Sorbent Tube Exposure Chamber

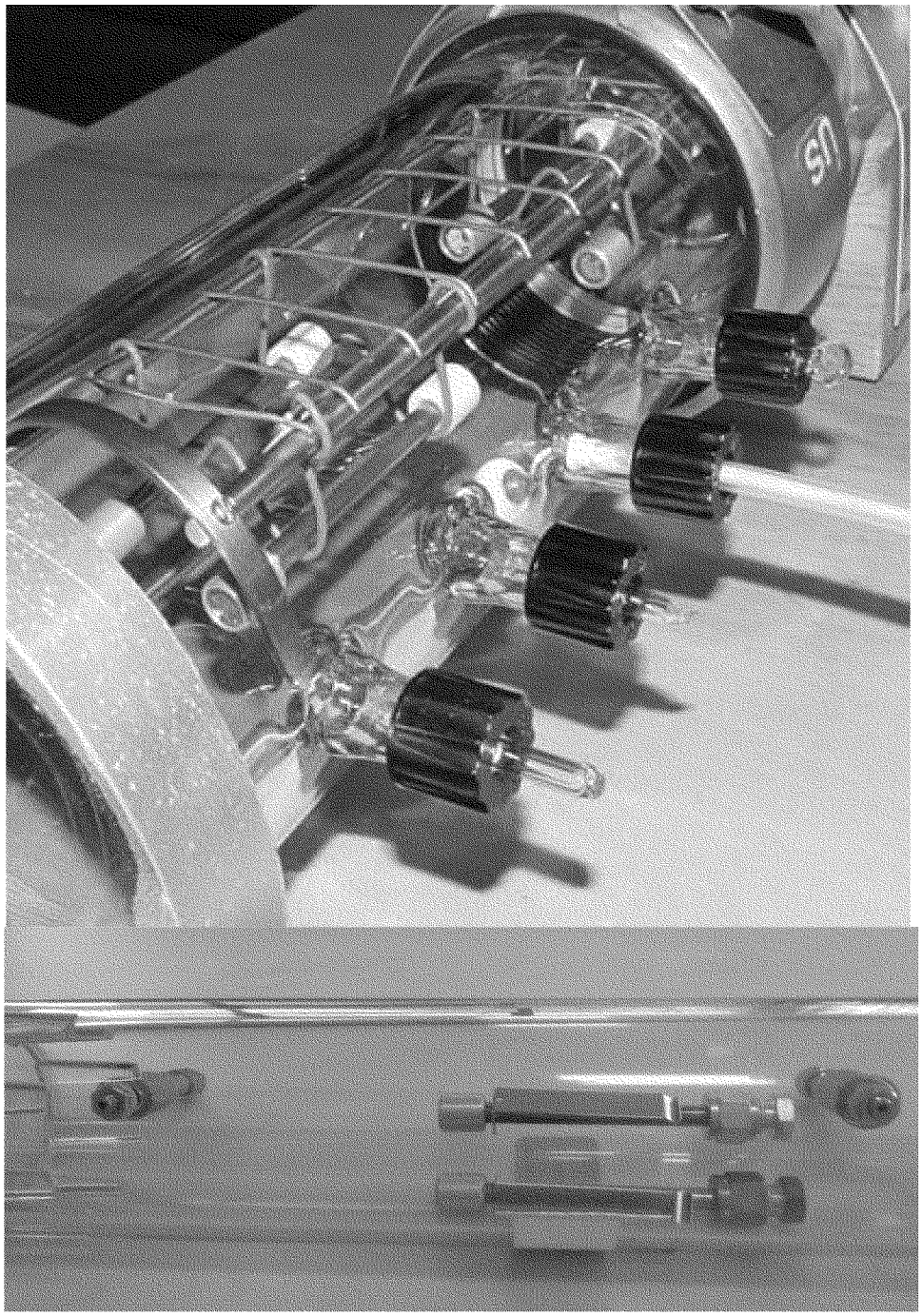

Figure A.2. Example Tube Retaining Rack in Exposure Chamber

A.9 Quality Control

A.9.1 Monitor and record the exposure chamber temperature and RH during PSD exposures.

A.9.2 Measure the flow rates of standards and purified house air immediately following PSD exposures.

A.10 Calibration and Standardization

A.10.1 Follow the procedures described in Method 325B Section 10.0 for calibration.

A.10.2 Verify chamber concentration by direct injection into a gas chromatograph calibrated for the target compound(s) or by collection of an integrated SUMMA canister followed by analysis using a preconcentration gas chromatographic method such as EPA Compendium Method TO–15, Determination of VOCs in Air Collected in Specially-Prepared Canisters and Analyzed By GC/MS.

A.10.2.1 To use direct injection gas chromatography to verify the exposure chamber concentration, follow the procedures in Method 18 of 40 CFR part 60, Appendix A–6.

A.10.2.2 To verify exposure chamber concentrations using SUMMA canisters, prepare clean canister(s) and measure the concentration of VOC collected in an integrated SUMMA canister over the period used for the evaluation (minimum 24 hours). Analyze the TO–15 canister sample following EPA Compendium Method TO–15.

A.10.2.3 Compare the theoretical concentration of volatile material added to the test chamber to the measured concentration to confirm the chamber operation. Theoretical concentration must

agree with the measured concentration within 30 percent.

A.11 Analysis Procedure

Analyze the sorbent tubes following the procedures described in Section 11.0 of Method 325B.

A.12 Recordkeeping Procedures for Sorbent Tube Evaluation

Keep records for the sorbent tube evaluation to include at a minimum the following information:

A.12.1 Sorbent tube description and specifications.

A.12.2 Sorbent material description and specifications.

A.12.3 Volatile analytes used in the sampler test.

A.12.4 Chamber conditions including flow rate, temperature, and relative humidity.

A.12.5 Relative standard deviation of the sampler results at the conditions tested.

A.12.6 95 percent confidence limit on the sampler overall accuracy.

A.12.7 The relative accuracy of the sorbent tube results compared to the direct chamber measurement by direct gas chromatography or SUMMA canister analysis.

A.13 Method Performance

A.13.1 Sorbent tube performance is acceptable if the relative accuracy of the passive sorbent sampler agrees with the active measurement method by ±10 percent at the 95 percent confidence limit and the uptake ratio is greater than 0.5 mL/min (1 ng/ppm-min).

Note: For example, there is a maximum deviation comparing Perkin-Elmer passive type sorbent tubes packed with Carbopack X of 1.3 to 10 percent compared to active sampling using the following uptake rates.

	1,3-butadiene uptake rate mL/min	Estimated detection limit (2 week)	Benzene uptake rates mL/min	Estimated detection limit (2 week)
Carbopack X (2 week)	0.61 ± 0.11 [a]	0.1 ppbv	0.67 [a]	0.05 ppbv

[a] McClenny, W.A., K.D. Oliver, H.H. Jacumin, Jr., E.H. Daughtrey, Jr., D.A. Whitaker. 2005. 24 h diffusive sampling of toxic VOCs in air onto Carbopack X solid adsorbent followed by thermal desorption/GC/MS analysis—laboratory studies. J. Environ. Monit. 7:248–256.

A.13.2 Data Analysis and Calculations for Method Evaluation

A.13.2.1 Calculate the theoretical concentration of VOC standards using Equation A.1.

$$C_f = \left[\frac{FR_i}{FR_t + FR_a}\right] \times C_s \qquad \text{Eq. A.1}$$

Where:

C_f = The final concentration of standard in the exposure chamber (ppbv).

FR_i = The flow rate of the target compound I (mL/min).

FR_t = The flow rate of all target compounds from separate if multiple cylinders are used (mL/min).

FR_a = The flow rate of dilution air plus moisture (mL/min).

C_s = The concentration of target compound in the standard cylinder (parts per million by volume).

A.13.2.3 Determine the uptake rate of the target gas being evaluated using Equation A.2.

$$U = \frac{M_x}{C_e \times T_t} \qquad \text{Eq. A.2}$$

Where:

M_x = The mass of analyte measured on the sampling tube (ηg).

C_e = The theoretical exposure chamber concentration (ηg/mL).

T_t = The exposure time (minutes).

A.13.2.4 Estimate the variance (relative standard deviation (RSD)) of the inter-sampler results at each condition tested using Equation A.3. RSD for the sampler is estimated by pooling the variance estimates from each test run.

$$S^2 = \sum_i^n \frac{\left(X_i - \overline{X}\right)^2}{n-1} \qquad \text{Eq. A.3}$$

Where:

X_i = The measured mass of analyte found on sorbent tube *i*.

$\overline{X}_i$ = The mean value of all X_i.

n = The number of measurements of the analyte.

A.13.2.4 Determine the percent relative standard deviation of the inter-sampler results using Equation A.4.

$$\%RSD_x = 100 \times \frac{\sqrt{S^2}}{\overline{X}} \qquad \text{Eq. A.4}$$

A.13.2.5 Determine the 95 percent confidence interval for the sampler results using Equation A.5. The confidence interval is determined based on the number of test runs performed to evaluate the sorbent tube and sorbent combination. For the minimum test requirement of eight samplers tested at two concentrations, the number of tests is 16 and the degrees of freedom are 15.

$$\Delta_{95\%} = \frac{\%RSD \times t_{0.95} \times f}{\sqrt{n}} \qquad \text{Eq. A.5}$$

Where:

$\Delta_{95\%}$ = 95 percent confidence interval.
%RSD = percent relative standard deviation.
$t_{0.95}$ = The Students t statistic for f degrees of freedom at 95 percent confidence.
f = The number of degrees of freedom.
n = Number of samples.

A.13.2.6 Determine the relative accuracy of the sorbent tube combination compared to the active sampling results using Equation A.6.

$$RA = \overline{X_i} - \overline{X_A} \pm \Delta_{95\%} \qquad \text{Eq. A.6}$$

Where:

RA = Relative accuracy.
$\overline{X}_i$ = The mean value of all X_i.
$\overline{X}_A$ = The average concentration of analyte measured by the active measurement method.
$\Delta_{95\%}$ = 95 percent confidence interval.

A.14 Pollution Prevention

This method involves the use of ambient concentrations of gaseous compounds that post little or no pollution to the environment.

A.15 Waste Management

Expired calibration solutions should be disposed of as hazardous materials.

A.16 References

1. ISO TC 146/SC 02 N 361 Workplace atmospheres—Protocol for evaluating the performance of diffusive samplers.

[FR Doc. 2014–12167 Filed 6–26–14; 8:45 am]

BILLING CODE 6560–50–P

FEDERAL REGISTER

Vol. 79 Monday,

No. 125 June 30, 2014

Part III

Department of the Interior

Fish and Wildlife Service

50 CFR Part 17

Endangered and Threatened Wildlife and Plants; Reclassification of the U.S. Breeding Population of the Wood Stork From Endangered to Threatened; Final Rule

DEPARTMENT OF THE INTERIOR

Fish and Wildlife Service

50 CFR Part 17

[Docket No. FWS–R4–ES–2012–0020; FXES11130900000C2–134–FF09E32000]

RIN 1018–AX60

Endangered and Threatened Wildlife and Plants; Reclassification of the U.S. Breeding Population of the Wood Stork From Endangered to Threatened

AGENCY: Fish and Wildlife Service, Interior.

ACTION: Final rule.

SUMMARY: We, the U.S. Fish and Wildlife Service (Service or USFWS), reclassify the United States (U.S.) breeding population of the wood stork from endangered to threatened under the Endangered Species Act of 1973, as amended (Act). Further, we establish the U.S. breeding population in Alabama, Florida, Georgia, North Carolina, Mississippi, and South Carolina as a distinct population segment (DPS). The endangered designation no longer correctly reflects the status of the DPS due to improvement in its overall status. This action is based on a review of the best available scientific and commercial data, which indicate that the U.S. wood stork DPS is not presently in danger of extinction across its range. While habitat loss and fragmentation continues to impact the U.S. wood stork DPS, the increase in the abundance of the breeding population and significant expansion of the breeding range reduce the severity and magnitude of these threats.

DATES: This rule becomes effective on July 30, 2014.

ADDRESSES: This final rule, as well as comments and materials received in response to the proposed rule, are available on the Internet at *http://www.regulations.gov* at Docket Number [FWS–R4–ES–2012–0020]. Comments and materials received, as well as supporting documentation used in preparation of this rule, will be available for public inspection, by appointment, during normal business hours at: U.S. Fish and Wildlife Services, North Florida Ecological Services Field Office, 7915 Baymeadows Way, Suite 200, Jacksonville, FL 32256.

FOR FURTHER INFORMATION CONTACT: Jay Herrington, North Florida Ecological Services Field Office, (see **ADDRESSES**); by telephone at 904–731–3336; or by facsimile (fax) at 904–731–3045. If you use a telecommunications device for the deaf (TDD), please call the Federal Information Relay Service (FIRS) at 800–877–8339.

SUPPLEMENTARY INFORMATION:

Executive Summary

Why We Need To Publish a Rule

- In September 2007, we completed a 5-year status review, which included a recommendation to reclassify the U.S. breeding population of the wood stork from endangered to threatened.
- In May 2009, we received a petition to reclassify the U.S. breeding population of wood stork; the petition incorporated the Service's 5-year review as its sole supporting information.
- On September 21, 2010, we published a 90-day finding that the petition presented substantial information indicating that reclassifying the wood stork may be warranted (75 FR 57426). We requested information that would assist us in our status review.
- On December 26, 2012, we published a 12-month finding that the petitioned action was warranted and concurrently a proposed rule to reclassify the U.S. breeding population of the wood stork from endangered to threatened and designate this population as a distinct population segment (DPS) (77 FR 75947). We requested peer and public review of the proposed rule.

Summary of the Major Provisions of This Final Rule

- We reclassify the U.S. breeding population of wood stork from endangered to threatened.
- We determine that the U.S. breeding population of wood stork is a DPS.
- We amend the List of Endangered and Threatened Wildlife (50 CFR 17.11(h)) to reflect the status change to threatened and that the U.S. wood stork DPS is found in the States of Alabama, Florida, Georgia, Mississippi, North Carolina, and South Carolina.

The Basis for the Action

- The U.S. breeding population of wood stork was listed under the Act in 1984, prior to publication of the joint policy of the National Marine Fisheries Service and U.S. Fish and Wildlife Service (Services) regarding the recognition of distinct vertebrate population segments (61 FR 4722). We find that the U.S. breeding population of wood stork meets the elements of the Services' DPS policy and is a valid DPS (U.S. Wood Stork DPS).
- When the U.S. breeding population of wood stork was listed in 1984, the population was known to occur in Alabama, Florida, Georgia, and South Carolina with breeding and nesting primarily in south and central Florida with a small number of nesting colonies in north Florida, Georgia, and South Carolina. Currently wood storks occur in Alabama, Florida, Georgia, Mississippi, North Carolina, and South Carolina, with breeding and nesting documented in Florida, Georgia, North Carolina, and South Carolina.
- The best available scientific and commercial data indicate that, since the U.S. breeding population of wood stork was listed as endangered in 1984, the breeding population has been increasing and its breeding range has expanded significantly.
- We have had 3-year population averages of total nesting pairs of wood storks higher than 6,000 nesting pairs since 2003. In addition, productivity appears to be sufficient to support a growing population. However, the 5-year average number of nesting pairs is still below the benchmark of 10,000 nesting pairs identified in the recovery plan for delisting.
- As a result of continued loss, fragmentation, and modification of wetland habitats in parts of the wood stork's range, we determine that the U.S. wood stork DPS meets the definition of a threatened species under section 3 of the Act, and we are reclassifying it from endangered to threatened.

Background

Summary of Comments and Recommendations

In the proposed rule published on December 26, 2012 (77 FR 75947), we requested that all interested parties submit written comments on the proposal by February 25, 2013. We also contacted appropriate Federal and State agencies, scientific experts and organizations, and other interested parties and invited them to comment on the proposal. In addition, the Service notified affected Tribes about the proposed rule. A newspaper notice inviting general public comment was published in several newspapers in the southeastern United States. We did not receive any requests for a public hearing; therefore, none were conducted.

Peer Review, State, and Tribal Comments

In accordance with our peer review policy published on July 1, 1994 (59 FR 34270), we solicited independent expert opinions from four individuals who have scientific expertise that included familiarity with wood storks and their habitat, biological needs, recovery

efforts, threats, and conservation biology principles. We invited peer reviewers to comment on the specific assumptions and conclusions in the proposed reclassification of the U.S. breeding population. We received comments from all four of the peer reviewers. The peer reviewers supported our conclusions and provided additional information, clarifications, and suggestions to improve the final rule.

Section 4(b)(5)(A)(ii) of the Act states that the Secretary must give actual notice of a proposed regulation under section 4(a) to the State agency in each State in which the species is believed to occur, and invite the comments of such agency. Section 4(i) of the Act states, ''the Secretary shall submit to the State agency a written justification for his failure to adopt regulations consistent with the agency's comments or petition.'' The Service submitted the proposed regulation to the States of Alabama, Florida, Georgia, Mississippi, North Carolina, and South Carolina. We received formal comments from the Florida Fish and Wildlife Conservation Commission, Georgia Department of Natural Resources (DNR), and North Carolina Wildlife Resources Commission. All three agencies support reclassification of the wood stork from endangered to threatened. The Mississippi Museum of Natural Science provided additional information about wood storks in Mississippi for the Service to consider.

In addition, the Service notified affected Tribes about the proposed rule. We did not receive any comments from Tribes.

(1) Comment: A peer reviewer and the Georgia DNR stated concerns and challenges that may influence future recovery of the wood stork due to climate change.

Our Response: Aspects of climate change such as sea level rise and associated tidal or storm surges, changes in rainfall patterns, storm frequency and intensity, and seasonal changes in temperature could affect the extent and quality of wood stork habitat, nesting success, and the range of the species. Any of these changes could impact the future viability of wood stork populations, either positively or negatively. Our assessments related to habitat (Factor A, below) and other natural and human influences (Factor E, below) have been expanded to more directly address observed changes and plausible projections of climate change, and related possible impacts to the wood stork. Although the information did not alter our decision to change the status of the wood stork DPS form endangered to threatened, we concur that the effects of climate change will influence the recovery of the wood stork.

As additional data and modeling become available from various scientific sources, and as conservation recommendations from the Landscape Conservation Cooperatives and others are developed for addressing the varied effects of climate change and its interactions with other conditions, it will no doubt inform recovery planning and implementation. We intend to further address climate change effects as we update the wood stork recovery plan, using the best scientific information available at that time.

(2) Comment: A peer reviewer suggested adding information and citations regarding the accuracy of the annual synoptic nesting surveys.

Our Response: We added information regarding synoptic nesting surveys in the *Rangewide Status and Demographics* section of this document. Rodgers *et al.* (1995, p. 656) indicates that aerial surveys generally underestimate counts and Rodgers *et al.* (2005, p. 230) indicates that by including ground counts in the survey and surveying a large proportion of the nesting colonies, the variability can be reduced. We have also incorporated this recommendation into the annual synoptic nest survey protocol.

(3) Comment: Peer reviewers provided additional information and citations on several topics including: natural colony turnover rates, colony distribution in the northern range, colony threats and management, mercury, avian malaria and pythons.

Our Response: We incorporated this information and the citations directly into the final determination.

(4) Comment: The Georgia DNR commented that many years of productivity data exist for colonies in Georgia, though only data from 2004 and 2005 were included in the reclassification proposal. Georgia DNR compiled, assessed, and provided the productivity data that it has collected for 32 colonies beginning in 1983, which represents more than 6,400 nests, representing 158 colony-years.

Our Response: We incorporated the data into the *Mating and Reproduction* section of this document. We have also compiled the productivity data from our files for the U.S. breeding population of wood storks and have made it available through our Web site at *http://www.fws.gov/northflorida/WoodStorks/wood-storks.htm.* We note that methods used to collect productivity data vary by colony and by area and that the USFWS recommends, when feasible, utilizing Rodgers (2005) *Protocol for Monitoring the Reproductive Success of Wood Storks in the Southeast United States* as the recommended scientific method for collecting productivity data to assess recovery.

Public Comments

We received 16 comments and letters from the public: 12 individuals, a timber company, and 3 conservation organizations. All substantive information provided during the comment period has either been incorporated directly into this final determination or addressed below.

(5) Comment: Reclassification/downlisting should not occur when FWS lacks data to determine whether one of the criteria for reclassification/downlisting has been met.

Our Response: Recovery plans are useful tools to guide conservation activities and to gauge the status of the species. However, there are many paths to accomplishing recovery of a species, and recovery may be achieved without all recovery criteria being fully met. The overriding considerations in determining listing status are the five factors listed in section 4(a)(1) of the Act. Current data indicate that since the U.S. breeding population of wood stork was listed as endangered in 1984, it has been increasing and the breeding range has expanded significantly. Productivity has supported a growing population, reducing the relative negative effects of the remaining threats to this species to the extent that the species is no longer in danger of extinction throughout all or a significant portion of its range. On balance, and in consideration of the best scientific and commercial information available, the Service believes the species best meets the definition of a threatened species. For more details of our status review, see **Summary of Factors Affecting the Species**. For additional information on the role of recovery plans, see the **Recovery Plan** section of this document.

(6) Comment: Wood stork populations in south Florida are too low and nesting success is too variable to warrant reclassification.

Our Response: We have seen substantial population growth, but we acknowledge that wood storks have had variable nesting success in south Florida. However, nesting numbers in south Florida have increased since 1986 with nesting goals being met in 5 of the past 12 years (Frederick 2013, p. 35; Table 21). We believe the final rule adequately considers both the threats and positive management actions in south Florida and, in conjunction with improvements throughout an expanded range, the species warrants

reclassification from endangered to threatened. The U.S. wood stork DPS revised status as threatened acknowledges that threats to the long-term viability of the species remain.

We share the concern that the timing of nesting is not improving in the Everglades and productivity has been variable and in some years low. As several commenters noted, in 2012, most of the wood stork nests in Everglades National Park failed. Later nesting increases the risk of mortality of nestlings that have not fledged prior to the onset of the wet season (Frederick 2012, p. 44). We acknowledge that restoration of key historical hydropatterns has not fully occurred under current water management regimes. These restoration efforts take time, and will need to be adjusted as appropriate in light of emerging information and conditions related to a changing climate.

Additionally, we share the concern regarding the lack of wood stork nesting at Corkscrew Swamp Sanctuary in recent years. Our recovery partners have indicated and documented that the loss of shallow, short hydroperiod wetlands is likely a leading factor causing or contributing to this issue. We also note that, during this time period, the average rainfall for the Southwest Coast basin has been below normal (*http://www.sfwmd.gov/portal/page/portal/xweb%20weather/rainfall%20historical%20%28year-to-date%29* for 2010–2012), resulting in drought conditions, which likely contributed to, magnified, or caused this problem. Various effects of a changing climate could influence the availability of suitable nesting and foraging habitat conditions in both negative and positive ways, depending on the magnitude and timing of changes in temperature and precipitation. We intend to work with partners to use the best scientific information available as we develop specific recovery actions regarding mitigation and restoration of shallow, short hydroperiod wetlands within the core foraging area of Corkscrew Swamp Sanctuary and other colonies as necessary.

TABLE 3 [1]—THREE-YEAR AVERAGES OF WOOD STORK NESTING

3-Year averages	Everglades [1]	South Florida [2] total	Florida total	U.S. total [3]
1999–2001	1,538			
2000–2002	1,868			
2001–2003	1,596	3,179	4,838	7,417
2002–2004	1,191	2,889	5,332	8,349
2003–2005	742	2,109	4,278	7,588
2004–2006	800	2,814	4,749	8,410
2005–2007	633	2,516	3,691	7,086
2006–2008	552	2,374	3,536	7,268
2007–2009	1,468	3,393	4,273	7,748
2008–2010	1,736	3,700	5,031	8,993
2009–2011	2,263	4,628	6,183	10,147
2010–2012	1,182	3,022	4,553	8,724
2011–2013	1,686	3,671	5,593	9,692

[1] Comprehensive Everglades Restoration Program Goal: 3-year average of 1,500–2,500; (Frederick 2013, p. 36, Table 21); Recovery Goal: 5-year average of 2,500.

[2] Broward, Charlotte, Collier, Hardee, Hendry, Indian River, Lee, Martin, Miami-Dade, Monroe, Osceola, Palm Beach, Polk, Sarasota, St. Lucie; South Florida MSRP Goal: 5-year average of 3,500 (USFWS 2001).

[3] Florida, Georgia, North Carolina, South Carolina; Reclassification Goal: 3-year average of 6,000; Recovery Goal: 5-year average of 10,000 (USFWS 2013).

(7) Comment: Several commenters stated that, under the Act, less protection is afforded to a threatened species than to an endangered species, referencing the Service's ''What Is the Difference Between Endangered and Threatened?'' document at *http://www.fws.gov/endangered/esa-library/pdf/t-vs-e.pdf.* Another commenter specifically stated that downlisting the wood storks from endangered to threatened would allow USFWS to scale back protection, expanding the circumstances under which ''take'' is permitted, and under which permits for ''take'' may be issued.

Our Response: Section 4(d) of the Act allows the Service to issue such regulations that the Secretary of the Interior deems necessary and advisable to conserve the species. It must be noted, however, that by regulation at 50 CFR 17.31(a), the Service affords a threatened species the same protections and prohibitions under section 9 of the Act as those given to endangered species (with an exception pertaining to take by an authorized agent of a State) unless or until a 4(d) rule is specifically promulgated. As no 4(d) rule was proposed for the U.S. wood stork DPS, the section 9 prohibitions against take continue to apply per 50 CFR 17.31(a) and, therefore, reclassification will not significantly change the protection afforded this species under the Act.

(8) Comment: The Service should ''designate'' two regions of wood stork habitat, ''South Florida'' and ''Coastal Tidal Wetlands,'' as ''Significant Portions of the Range'' as the Service considers the next steps for recovery.

Our Response: ''Significant portion of the range,'' a term found in the definitions of endangered and threatened (Section 3 of the Act), is a consideration in the determination of whether the threats in one portion of a species' range are of such impact to the overall viability of the species that it warrants listing throughout the entire range. Current data show that the breeding range has now almost doubled in extent and shifted northward along the Atlantic coast as far as southeastern North Carolina. As a result, dependence of wood storks on any specific wetland complex has been reduced. See the **Significant Portion of the Range Analysis** of this rule for our detailed discussion of why South Florida does not represent a significant portion of the range. In addition, wood storks are known to utilize numerous habitat types. These include coastal tidal

[1] Table 3 has been created to address certain comments received. We have named it Table 3 even though it is included here before Tables 1 and 2, so as not to confuse readers by changing the Table numbering in the final rule with respect to the numbering in the proposed rule. Information from this table has been incorporated directly into the Background section of the final rule without repeating the entire table.

wetlands and marsh, lakes, and ponds, interior marsh systems, and manmade impoundments (e.g., Harris Neck NWR and Washo Reserve). This ability is advantageous for the wood stork and is one of the reasons for its improved status.

However, the commenter's recommendations will be considered during future recovery planning in determining whether the South Florida, Coastal Tidal Wetlands, or other regions should be considered as management or recovery units for the species. We intend to continue working with partners under our recovery program to restore and protect all types of habitat used by the U.S. wood stork DPS.

(9) Comment: The Service should delay implementation of the proposed reclassification rule until the science questions and gaps, data analyses, and regulatory deficiencies have all been addressed.

Our Response: The wood stork no longer meets the definition of endangered. The rule recognizes the improved status of the species from endangered (*i.e.,* currently in danger of extinction) to threatened (*i.e.,* one which is likely to become an endangered species in the foreseeable future) as a result of documented improvement in the species' population, and is based on the best available science including information regarding ongoing and likely foreseeable changes in conditions that are relevant to the DPS. The species' revised status as threatened acknowledges that threats to the long-term viability of the species remain. Implementation of the rule will not reduce any protective measures currently in place.

(10) Comment: By citing predictions that the Comprehensive Everglades Restoration Program (CERP) restoration, when fully realized, will result in large, sustainable, breeding populations of wading birds, the Service dismisses the potential for wood storks to be biologically extirpated from the Everglades. The commenter is reluctant to consider ongoing and long-term restoration efforts due to the multi-generational timeframe of the anticipated benefits.

Our Response: As Table 2 (see Background discussion) shows, wood storks continue to nest in South Florida (including the Everglades); for 7 of the last 10 years there have been over 1,200 nesting pairs. In addition, Table 3 indicates that since 2007, 3-year averages of nesting pairs in South Florida and the Everglades have been over 3,000 and 1,100, respectively. We acknowledge that productivity has been variable in South Florida; however, wood storks continue to nest in this area. Wood storks are a long-lived species that demonstrates considerable variation in the habitat conditions it is able to utilize and in population numbers in response to changing hydrological conditions. As indicated in our analysis of the factors that are a basis for determining whether the DPS meets the definition of an endangered or threatened species, and in our section on ''Significant Portion of the Range,'' we have carefully considered various potential changes to the DPS. This includes recognizing that CERP restoration efforts and their outcomes in relation to the wood stork in South Florida may differ from what has been expected in the past, particularly due to the potential effects of climate change, and it also recognizes that adjustments in those restoration efforts may be needed as new information and conditions emerge. This does not mean, however, that we believe the data currently available support a conclusion that wood storks are likely to be biologically extirpated from the Everglades.

(11) Comment: The proposed rule did not contain analysis of any of the available models projecting sea level rise within the wood stork's breeding range.

Our Response: Please see our response to Peer Review Comment 1 and the information on projections of sea level rise that we have included, particularly in the material presented under Factor A, below.

(12) Comment: The conservation of existing shallow wetlands and restoration of former shallow wetlands is essential to stabilizing and recovery of the wood stork in South Florida.

Our Response: We agree and intend to further address this as a priority recovery action with partners in South Florida. We note also such actions will need to consider likely changing conditions (e.g., those that may result from sea level rise and associated tidal and storm surge, as well as changes in precipitation and other variables that may influence the near-term and long-term availability of suitable habitat conditions).

Summary of Changes From the Proposed Rule

During the comment period, peer reviewers provided additional information and citations on several topics including: Natural colony turnover rates, colony distribution in the northern range, colony threats and management, mercury, avian malaria, and pythons. We incorporated this information and the citations directly into this final rule. State agencies provided updated productivity data that we added to the final rule along with additional productivity data we pulled and evaluated from sources. We also added information and citations regarding the accuracy of the annual synoptic nesting surveys and 2012 and 2013 data counts to Table 1 and Table 2. In addition, based on comments received, we provided more details about ongoing and projected climate change and associated effects in relation to the wood stork DPS covered by this rule. None of these changes from the proposed rule altered our conclusion that the DPS now meets the Act's definition of a threatened species.

In this final rule, we intend to discuss only those topics directly relevant to the reclassification and new information provided during the open comment period. For more information on the biology of this species (specifically the *Taxonomy and Species Description, Life Span,* and *Feeding* sections), refer to the 12-month finding and proposed rule to reclassify the U.S. breeding population of the wood stork which published in the **Federal Register** on December 26, 2012 (77 FR 75947).

The biological information has been updated with literature and information provided during the public comment period and from our files. The following section summarizes information found in a large body of published literature and reports, including the revised recovery plan for the U.S. breeding population of the wood stork (USFWS 1997), The Birds of North America Online species account for wood stork (Coulter *et al.* 1999), and the South Florida Multi-Species Recovery Plan (USFWS 1999).

Mating and Reproduction

Wood storks are seasonally monogamous, probably forming a new pair bond every season. First breeding has been documented at 3 and 4 years old. Nest initiation varies geographically. Wood storks can lay eggs as early as October and as late as June in Florida (Rodgers 1990, pp. 48–51). Wood storks in north Florida, Georgia, and South Carolina initiate nesting on a seasonal basis regardless of environmental conditions (USFWS 1997, p. 6). They lay eggs from March to late May, with fledging occurring in July and August. Historically, nest initiation in south Florida was in November to January; however, in response to the altered habitat conditions (wetland drainage, hydroperiod alteration) in south Florida, wood storks nesting in Everglades National Park and in the Big Cypress

region of Florida have delayed initiation of nesting to February or March in most years since the 1970s. Colonies that start after January in south Florida risk having young in the nests when May–June rains flood marshes and disperse fish, which can cause nest abandonment. Frederick (2012, p. 44) states that later nesting increases the risk of mortality of nestlings that have not fledged prior to the onset of the wet season, which is likely the difference between the south Florida segment of the population being a source or a sink to the wood stork population. Based upon their analysis of fledgling survival, Borkhataria *et al.* 2012 (p. 525) also note the possibility that south Florida is acting as a population sink.

Females generally lay a single clutch of two to five eggs per breeding season, but the average is three eggs. Females sometimes lay a second clutch if nest failure occurs early in the season (Coulter *et al.* 1999, p. 11). Average clutch size may increase during years of favorable water levels and food resources. Incubation requires about 30 days and begins after the female lays the first one or two eggs. Nestlings require about 9 weeks for fledging, but the young return to the nest for an additional 3 to 4 weeks to be fed. Actual colony production measurements are difficult to determine because of the prolonged fledging period, during which time the young return daily to the colony to be fed.

Wood storks experience considerable variation in production among colonies, regions, and years in response to local and regional habitat conditions and food availability (Kahl 1964, p. 115; Ogden *et al.* 1978, pp. 10–14; Clark 1978, p. 183; Rodgers and Schwikert 1997, pp. 84–85). Several recent studies documented production rates to be similar to rates published between the 1970s and 1990s. Rodgers *et al.* (2008, p. 25) reported a combined production rate for 21 north- and central-Florida colonies from 2003 to 2005 of 1.19 ± 0.09 fledglings per nest attempt (n = 4,855 nests). Rodgers *et al.* (2009, p. 3) also reported the St. Johns River basin production rate of 1.49 ± 1.21 fledglings per nest attempt (n = 3,058 nests) and for successful nests an average fledgling rate of 2.26 ± 0.73 fledglings per nest attempt (n = 2,105 nests) from 2004 to 2008.

Bryan and Robinette (2008, p. 20) reported rates of 2.3 and 1.6 fledged young per nesting attempt in 2004 and 2005, respectively, for South Carolina and Georgia. The 2011, 2012, and 2013 productivity rates for Georgia were 1.32, 1.13, and 0.67 (T. Keyes, Georgia DNR, pers. comm., 2012 and 2013). During the data collection period of 1983–2012 in Georgia, the weighted average of all years and colonies was 1.76±0.8 (158 colony-years) with a range of 0.33 to 2.65 (T. Keyes, Georgia DNR, pers. comm., 2013). Murphy and Coker (2008, p. 5) reported that since the wood stork was listed in 1984, South Carolina colonies averaged 2.08 young per successful nest with a range of 1.72 to 2.73. In 2011, South Carolina productivity was 1.6 fledged young per nest at two colonies, 1.1 in 2012 at seven colonies monitored, and 1.4 in 2013 at nine colonies monitored (C. Hand, South Carolina DNR, pers. comm., 2013).

The Palm Beach County Solid Waste Authority colony was documented with 1.08, 0.46, and 0.52 fledgling per nesting attempt in 2011, 2012 and 2013, respectively (M. Morrison, PBC, pers. comm., 2013). The Corkscrew Swamp Sanctuary colony near Naples, Florida (J. Lauritsen, Audubon, pers. comm., 2012), documented no nesting in 2010–13, which also coincides with years with drought conditions for this basin (*http://www.sfwmd.gov/portal/page/portal/xweb%20weather/rainfall%20historical%20%28year-to-date%29* for 2010–2012). Productivity was 2.29 fledglings per nesting attempt in 2009, and annual rates ranged from 0.00 (abandonment) to 2.55 (2001–2013). Cook (2011, p. 2) reports that the 2011 productivity in the Everglades was relatively low, that all 820 nests failed in 2012 (Cook 2012, p. 2). In 2013, wood storks were largely successful in the Water Conservation Areas, Tamiami West colony in the northern Everglades and lower in the southern Everglades (Cook 2013, p. 2). The U.S. breeding population of the wood stork's productivity data that have been collected using the method developed by Rogders (2005) is available at: *fws.gov/northflorida/wood storks.*

Habitat

Wood storks use a wide variety of freshwater and estuarine wetlands for nesting, feeding, and roosting throughout their range and thus are dependent upon a mosaic of wetlands for breeding and foraging. For nesting, wood storks generally select patches of medium to tall trees as nesting sites, which are located either in standing water such as swamps, or on islands surrounded by relatively broad expanses of open water (Ogden 1991, p. 43). Colony sites located in standing water must remain inundated throughout the nesting cycle to protect against predation and nest abandonment. Connectivity to the mainland is a hazard to the colony longevity and persistence (Tsai *et al.* 2011, p. 5). A wood stork tends to use the same colony site over many years, as long as the site remains undisturbed, and sufficient feeding habitat remains in the surrounding wetlands (Frederick and Ogden 1997, p. 320). Colony turnover is a typical and fairly rapid process for this species (Frederick and Meyer 2008, p. 12). Wood storks may also abandon traditional wetland sites if changes in water management result in water loss from beneath the colony trees.

Typical foraging sites include a mosaic of shallow water wetlands. Several factors affect the suitability of potential foraging habitat for wood storks. Foraging habitats must provide both a sufficient density and biomass of forage fish and other prey and have vegetation characteristics that allow storks to locate and capture prey. Calm water, about 5 to 40 cm (2 to 16 in) in depth, and free of dense aquatic vegetation, is preferred (Coulter and Bryan 1993, p. 61). During nesting, these areas must also be sufficiently close to the colony to allow storks to deliver prey to nestlings efficiently. Hydrologic and environmental characteristics have strong effects on fish density, and these factors may be some of the most significant in determining foraging habitat suitability. Important to wood stork productivity is the timing of two different factors of wetland hydrology. The production of prey that support a wood stork colony is directly related to uninterrupted hydro periods of certain durations prior to the nesting season and then prey becoming available due to short-term drawdown of water levels that cue and support wood stork nesting.

Alterations in the quality and amount of foraging habitats in the Florida Everglades and extensive drainage and land conversions throughout south Florida led to the initial decline of the wood stork nesting population and the change in the timing and location of nesting in response to the alterations in hydrology and habitat (Ogden 1994, p. 566). The overall distribution of the breeding population of wood storks is in transition. The wood stork appears to have adapted to changes in habitat in south Florida in part by nesting later, nesting in colonies in the interior Everglades system (Ogden 1994, p. 566), and by expanding its breeding range north into Georgia, South Carolina, and North Carolina (Brooks and Dean 2008, p. 58). To date, many of the colonies in the more northern range extension are much smaller than historic colonies in south Florida and this may be the factor of a more linear distribution of foraging habitats with wetlands associated with rivers, inter-tidal wetlands, isolated

wetlands and marsh impoundments (Murphy and Coker 2008, p. 3).

Distribution

The wood stork occurs in South America from northern Argentina, eastern Peru, and western Ecuador, north into Central America, Mexico, Cuba, Hispaniola, and the southern United States. The breeding range includes the southeastern United States in North America, Cuba and Hispaniola in the Caribbean, and southern Mexico through Central America (Figure 1). In South America, the breeding range is west of the Andes south from Colombia to western Ecuador, east of the Andes from Colombia south through the Amazonas in Brazil to eastern Peru, northern Bolivia and northern Argentina east to the Atlantic coast through Paraguay, Uruguay, and north to the Guianas and Venezuela (Figure 1; Coulter *et al.* 1999, p. 2). The winter range in Central and South America is not well studied, but wood storks are known to occur year-round as a resident throughout the breeding range.

At the time of listing in 1984, the range of the U.S. population of wood storks was Florida, Georgia, South Carolina, and Alabama. Breeding was restricted primarily to 22 nesting colonies in peninsular Florida in 1983 and only four colonies occurring in Georgia and South Carolina. The current breeding range includes peninsular Florida (39–57 colonies 2010–2013), the coastal plain and large river systems of Georgia (17–28 colonies) and South Carolina (14–23 colonies), and southeastern North Carolina (1–3 colonies). The breeding range has expanded west to south-central Georgia and to the panhandle of Florida to the Apalachicola River system. The nesting colony database for the U.S. breeding population of the wood stork can be found at *http://www.wec.ufl.edu/faculty/frederickp/woodstork/.* The nonbreeding season range includes all of Florida; the coastal plains and large river systems of Alabama, Georgia, South Carolina; and southern North Carolina and eastern Mississippi.

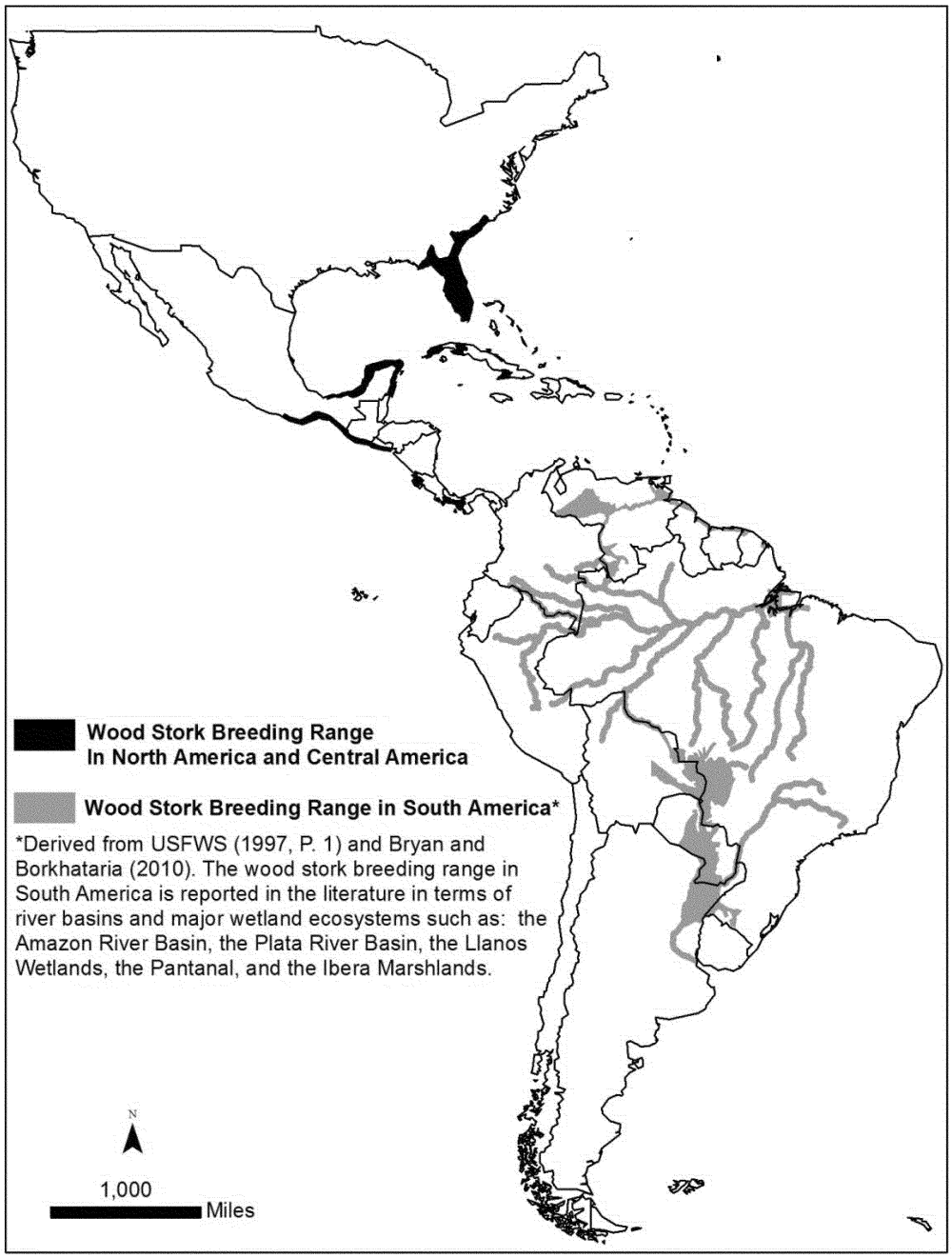

Figure 1. Breeding range of the wood stork in North, Central, and South America (USFWS 1997, p. 1; Coulter *et al.* 1999, p. 1; Bryan and Borkhataria 2010).

Wood storks are not true migrants, but some individuals do undergo lengthy inter-regional travel in response to resource availability (Coulter *et al.* 1999, p. 3; Bryan *et al.* 2008, p. 39). Generally, wood storks disperse following breeding. As the rainy season begins in May in south Florida and the Everglades, post-breeding wood storks, fledglings, and juveniles disperse throughout peninsular Florida and many move northward along the coastlines and coastal plain of Georgia, South Carolina, North Carolina and westward along large river basins in Alabama and eastern Mississippi, while others do not disperse (Coulter *et al.* 1999, p. 2; Hylton 2004, pp. 50–52; Bryan *et al.* 2008, pp. 39–40). Individuals from northern Florida, Georgia, and South Carolina colonies also disperse across the coastal plain and coastal marshes in the southeastern United States in July to August after the breeding season. Most wood storks in this population winter in south and central Florida and along the coast of peninsular Florida, Georgia, and South Carolina. These inter-regional movements have been documented through color marking, banding, radio-telemetry and satellite-telemetry studies (Comer *et al.* 1987, p. 165; Ogden 1996, p. 34; Coulter *et al.* 1999, p. 4; Savage *et al.* 1999, p. 65; Bryan *et al.* 2008, pp. 39–41).

Wood storks are seasonal visitors in Texas, Louisiana, the lower Mississippi Valley, and California. These are post breeders and juveniles from Central America (Rechnitzer 1956, p. 431; Coulter *et al.* 1999, pp. 4–5). Bryan *et al.* (2008, pp. 39–40) suggest that wood storks observed in western Mississippi and Louisiana originate from Central America, and wood storks found in eastern Mississippi originate from the U.S. population. Behaviorally, wood storks are not predisposed to travel across open waters like the Gulf of Mexico, as they use thermals for soaring flight for long-distance movements. The lack of thermals over open water restricts movements back and forth across the Gulf of Mexico from Florida to Central and South America or the Caribbean.

Rangewide Status and Demographics

At the global level, the International Union for Conservation of Nature (IUCN) classifies the wood stork as a species of ''least concern.'' This is due to the apparent demographic stability documented in its large range that encompasses portions of North, Central, and South America (IUCN 2010, p. 1). Bryan and Borkhataria (2010, p. 2) compiled and summarized the conservation status for wood storks in Central and South America and provide the following description with regard to the rangewide status of the wood stork:

The IUCN Red List/BirdLife International listing classifies the wood stork as a species of ''least concern'' for its entire range (BirdLife International 2008, 2009). This classification is based on breeding/resident range size, population trends, population size. This classification is due in part to an extremely large global breeding range (estimated at 14,000,000 km^2) and a moderately small to large population estimate (38,000–130,000 birds). Although the species' global population trend is thought to be decreasing, the decline is not thought to be sufficiently rapid to reach critical thresholds to threaten the species (BirdLife 2009: a ''vulnerable'' population exhibits a >30% decline over 10 years or three generations). Population size estimates for South America range from 50,000–100,000 wood storks (Byers *et al.* 1995) and approximately 48,000–70,000 wood storks in Central and North America (Kushlan *et al.* 2002).

Also, a recent assessment aimed at identifying the world's most climate vulnerable species across many taxa included consideration of the wood stock throughout its entire range in North, Central and South America. The assessment concluded that the relative overall climate change vulnerability of the wood stork is low (Foden *et al.* 2013, Appendix A).

The U.S. wood stork population decline between 1930 and 1978 is attributed to reduction in the food base necessary to support breeding colonies, which is thought to have been related to loss of wetland habitats and changes in hydroperiods (Ogden and Nesbitt 1979, p. 521; Ogden and Patty 1981, p. 97; USFWS 1997, p. 10; Coulter *et al.* 1999, p. 18). The U.S. breeding population is considered regionally endangered by IUCN due to habitat degradation (IUCN 2011). Ogden (1978, p. 143) concluded the U.S. wood stork breeding population in the 1930s was probably less than 100,000 individuals, or between 15,000 and 20,000 pairs. The estimated U.S. population of breeding wood storks throughout the southeastern United States declined from 15,000–20,000, to about 10,000 pairs in 1960, to a low of 2,700–5,700 pairs between 1977 and 1980 (Ogden *et al.* 1987, p. 752). The low of 2,700 nesting pairs was documented in 1978, during the severe drought when many wood storks likely did not breed.

During the 29-year period since listing under the Act (1984 to 2013), 20 synoptic surveys of nesting colonies of the wood stork in the U.S. population's breeding range (Florida, Georgia, South Carolina, and North Carolina) were completed. Fourteen of those resulted in counts exceeding 6,000 pairs. Ten of those higher counts occurred since 2002 (2002, 2003, 2004, 2006, 2008, 2009, 2010, 2011, 2012, and 2013; Table 1; USFWS 2013). Three counts of more than 10,000 pairs have occurred during the past 8 years, and the count of 12,720 pairs in 2009 is the highest on record since the early 1960s. This population estimate along with a conservative estimate of 4,000 pre-breeding age birds suggest 30,000 storks were inhabiting the United States in 2009 (Bryan and Borkhataria 2010, p. 2). Nest counts were 8,149 in 2010, 9,579 in 2011, 8,452 in 2012, and 11,046 in 2013 (Table 1).

The Service and its partners have used synoptic aerial surveys to monitor the wood stork breeding population during the peak of the nesting season (April) since the mid-1970s. The Service acknowledges the limitations involved in relying on aerial surveys for developing wood stork population estimates as they may underestimate numbers of nests (Rodgers *et al.* 1995, p. 655). Frederick *et al.* (2003, p. 282) found that accuracy of aerial counts of wading birds can be quite high and Rodgers *et al.* (2005, p. 230) found that, by including ground counts in the survey and surveying a large proportion of the nesting colonies, the variability can be reduced. The Service notes that the wood stork is a long-lived species that demonstrates considerable variation in nesting population numbers in response to changing hydrological conditions. This long reproductive lifespan allows wood storks to tolerate reproductive failure in some years, and naturally occurring events have undoubtedly always affected the breeding success of this species, causing breeding failures and variability in annual nesting (USFWS 1997, p. 11) and productivity.

TABLE 1—WOOD STORK NESTING DATA IN THE SOUTHEASTERN UNITED STATES [USFWS 2013]

Year	Total		Florida		Georgia		South Carolina		North Carolina	
	Nesting pairs	Colonies	Nesting pairs	Colonies	Nesting pairs	Colonies	Nesting pairs	Colonies	Nesting pairs	Colonies
1975	9,752	27	9,610	24	142	3				
1976	5,310	17	5,294	16	16	1				
1977	5,263	25	5,125	21	138	4				
1978	2,695	18	2,595	16	100	2				
1979	4,648	24	3,800	22	55	2				
1980	5,063	25	4,766	20	297	5				
1981	4,442	22	4,156	19	275	2	11	1		
1982	3,575	22	3,420	18	135	2	20	1		
1983	5,983	25	5,600	22	363	2	20	1		
1984	6,245	29	5,647	25	576	3	22	1		
1985	5,193	23	4,562	30	557	5	74	1		
1986	.....	.....	(**)	.....	648	4	120	3		
1987	.....	.....	(**)	.....	506	5	194	3		

TABLE 1—WOOD STORK NESTING DATA IN THE SOUTHEASTERN UNITED STATES [USFWS 2013]—Continued

Year	Total		Florida		Georgia		South Carolina		North Carolina	
	Nesting pairs	Colonies	Nesting pairs	Colonies	Nesting pairs	Colonies	Nesting pairs	Colonies	Nesting pairs	Colonies
1988	.....	.....	(**)	.....	311	4	179	3		
1989	.....	.....	(**)	.....	543	6	376	3		
1990	.....	.....	(**)	.....	709	10	536	6		
1991	4,073	37	2,440	25	969	9	664	3		
1992	.....	.....	(**)	.....	1,091	9	475	3		
1993	6,729	43	4,262	29	1,661	11	806	3		
1994	5,768	47	3,588	26	1,468	14	712	7		
1995	7,853	54	5,523	31	1,501	17	829	6		
1996	.....	.....	(**)	.....	1,480	18	953	7		
1997	.....	.....	(**)	.....	1,379	15	917	8		
1998	.....	.....	(**)	.....	1,665	15	1,093	10		
1999	7,768	71	6,109	51	1,139	13	520	8		
2000	.....	.....	(**)	.....	566	7	1,236	11		
2001	5,582	44	3,246	23	1,162	12	1,174	9		
2002	7,855	70	5,463	46	1,256	14	1,136	10		
2003	8,813	78	5,804	49	1,653	18	1,356	11		
2004	8,379	93	4,726	63	1,596	17	2,057	13		
2005	5,572	73	2,304	40	1,817	19	1,419	13	32	1
2006	11,279	82	7,216	48	1,928	21	2,010	13	125	1
2007	4,406	55	1,553	25	1,054	15	1,607	14	192	1
2008	6,118	73	1,838	31	2,292	25	1,839	16	149	1
2009	12,720	86	9,428	54	1,676	19	1,482	12	134	1
2010	8,149	94	3,828	51	2,708	28	1,393	14	220	1
2011	9,579	88	5,292	45	2,160	19	2,031	23	96	1
2012	8,452	77	4,539	39	1,905	17	1,827	19	181	2
2013	11,046	100	6,948	57	1,873	19	2,020	21	205	3

** No survey data available for North and Central Florida.

Previous Federal Actions

For more information on previous Federal actions, refer to the 12-month finding and proposed rule to reclassify the U.S. breeding population of the wood stork (77 FR 75947).

Distinct Vertebrate Population Segment Analysis

On February 7, 1996, we published in the **Federal Register** our ''Policy Regarding the Recognition of Distinct Vertebrate Population Segments under the Endangered Species Act'' (DPS Policy) (61 FR 4722). For a population to be listed under the Act as a distinct vertebrate population segment, three elements are considered: (1) The discreteness of the population segment in relation to the remainder of the species to which it belongs; (2) the significance of the population segment to the species to which it belongs; and (3) the population segment's conservation status in relation to the Act's standards for listing, (*i.e.,* is the population segment, when treated as if it were a species, endangered or threatened). The Act defines ''species'' to include ''. . . any distinct population segment of any species of vertebrate fish or wildlife which interbreeds when mature'' (16 U.S.C. 1532(16)). The best available scientific information supports recognition of the U.S. breeding population of the wood stork as a distinct vertebrate population segment. We discuss the discreteness and significance of the population segment within this section; the remainder of the document discusses the status of the U.S. wood stork DPS.

Discreteness

The DPS policy states that a population segment of a vertebrate species may be considered discrete if it satisfies either one of the following conditions:

(1) It is markedly separated from other populations of the same taxon as a consequence of physical, physiological, ecological, or behavioral factors. Quantitative measures of genetic or morphological discontinuity may provide evidence of this separation; or

(2) It is delimited by international governmental boundaries between which significant differences exist in control of exploitation, management of habitat, conservation status, or regulatory mechanisms that are significant in light of section 4(a)(1)(D) of the Act.

Globally, wood storks occur only in the Western Hemisphere and comprise a mosaic of breeding populations in North, Central, and South America, and the Caribbean, each with unique nesting sites, foraging areas, and seasonal movement patterns in response to regional environmental factors. Historically, wood storks nested in all Atlantic and Gulf coastal United States from Texas to South Carolina (Bent 1926, p. 65; Cone and Hall 1970, p. 14; Dusi and Dusi 1968, p. 14; Howell 1932, pp. 113–115; Oberholser 1938, p. 76; Oberholser and Kincaid 1974, p. 124; Wayne 1910), although the colonies outside Florida formed irregularly and contained few birds (Ogden and Nesbitt 1979, p. 512).

Currently, the range of the U.S. breeding population includes Alabama, Florida, Georgia, Mississippi, North Carolina, and South Carolina, with breeding and nesting documented in Florida, Georgia, North Carolina, and South Carolina. The U.S. wood stork population represents the northernmost extent of the wood stork's range and the only population breeding in the United States (USFWS 1997, p. 1; Coulter *et al.* 1999, pp. 2–3). The U.S. population's breeding range is separated by the Strait of Florida from the next nearest nesting population, which is located in Cuba, 151 km (94 mi) away; it is approximately 965 km (600 mi) over the Gulf of Mexico from the other North American nesting colony, which breeds in southern Mexico. However, wood storks are not behaviorally predisposed to travel across the open ocean. Wood storks use thermals for soaring flight for

long-distance movements. The lack of thermals over water may restrict movements from Florida to the Caribbean or to Mexico and Central and South America (Coulter *et al.* 1999, p. 4). The available evidence does not suggest that wood storks have crossed the Florida Straits between the Caribbean islands and the United States or crossed the Gulf of Mexico to or from Central and South America.

Lengthy inter- and intra-regional movements, related to food availability, to the wetlands of the Mississippi River Basin and adjacent coastal plain river basins have been documented from both the U.S. population and Central American wood storks (Coulter *et al.* 1999, p. 5; Bryan *et al.* 2008, pp. 40–41). These studies suggest post-breeding dispersal occurs along the coastal plain, not across the Gulf of Mexico, and that wood storks observed in eastern Mississippi originate from the southeastern United States and those observed in western Mississippi and Louisiana originate from Central America. A small percentage of wood storks from both the United States and Central America apparently overlap during this post-breeding season dispersal within Mississippi. Some small but unknown level of mixing may occur between U.S. and Central American breeding populations in Mississippi (Bryan *et al.* 2008, pp. 40–41; R. Borkhataria, University of Florida, pers. comm., 2010). However, based upon satellite-telemetry studies (*e.g.,* Hylton 2004, pp. 50–52; Bryan *et al.* 2008, pp. 39–40; Borkhataria 2009, pp. 120–124) and other marking studies, mixing appears negligible. Based on the above information, if the U.S. population were extirpated, it is our assessment that repopulation from the Central American wood storks would not be sufficient to replenish the depleted population in the foreseeable future.

Genetic data support the conclusion that wood storks occurring in the southeastern United States function as one population. Stangel *et al.* (1990, p. 15) employed starch gel electrophoretic techniques to examine genetic variation in Florida wood stork colonies. The study did not indicate significant allozyme differences within or between colonies. Van Den Bussche *et al.* (1999, p. 1083) used a combination of DNA or allozyme approaches and found low levels of genetic variability and allelic diversity within Georgia and Florida colonies, suggesting one population of wood storks in the southeastern United States. A genetic comparison using mitochondrial DNA (mtDNA) between U.S. and Brazilian wood storks (the north and south ends of the geographic range) reveals that either a demographic decline or a recent evolutionary bottleneck reduced the levels of mtDNA variability of the U.S. population (Lopes *et al.* 2011, p. 1911). The genetic structuring assessment revealed no significant differentiation between the U.S. and Brazilian wood storks, indicating that either the populations were only recently separated or that gene flow continues to occur at low levels, and the haplotype network analysis indicated low levels of gene flow between populations that were closely related in the past (Lopes *et al.* 2011, p. 1911). Genetic studies indicate no significant differences between U.S. and Brazilian wood storks. However, satellite-tracked movements of U.S. and Central American wood storks indicate that U.S. and Brazilian birds likely do not interbreed (Hylton 2004, pp. 50–52; Bryan *et al.* 2008, pp. 39–40; Borkhataria 2009, pp. 120–124). Based on the genetic information, we conclude that a past demographic decline has led to the reduced levels of genetic variability in all populations of wood stork that were studied, that U.S. and other populations were only recently separated, that the southeastern U.S. populations act as a single population, and negligible or very low gene flow occurs between the populations in the United States and Brazil.

Consequently, we conclude, based on the best available information, that the U.S. breeding population of the wood stork is markedly separated from wood stork populations in the Caribbean, Mexico, Central America, and South America based on physical separation and wood stork dispersal behavior.

Significance

The DPS policy states that populations that are found to be discrete will then be examined for their biological or ecological significance to the taxon to which they belong. This consideration may include evidence that the loss of the population would create a significant gap in the range of the taxon. The U.S. breeding population of the wood stork represents the northernmost portion of the species' range in the world (Coulter *et al.* 1999, p. 2) and the only population breeding in the United States. Loss of this population would result in a significant gap in the extent of the species' range. Because the nearest populations in the Caribbean and North America would not likely be able to naturally repopulate the U.S. breeding population if it were extirpated, wood storks would no longer breed in the Everglades and in the salt- and fresh-water wetlands of Florida, Georgia, South Carolina, and North Carolina. Maintaining a species throughout its historical and current range helps ensure the species' population viability and reduce impacts to the species as a whole due to localized stochastic events. Therefore, we find that loss of the U.S. breeding population of the wood stork, whose range has expanded to include Mississippi and North Carolina (USFWS 2007, p. 11), would constitute a significant gap in the range of the species as a whole.

Summary

Based on the above analysis, we conclude that the U.S. breeding population of wood storks meets both the discreteness and significance elements of the 1996 DPS policy. Therefore, we recognize this population as a valid DPS.

Recovery Plan

Section 4(f) of the Act directs us to develop and implement recovery plans for the conservation and survival of endangered and threatened species unless we determine that such a plan will not promote the conservation of the species. The Act directs that, to the maximum extent practicable, we incorporate into each plan:

(1) Site-specific management actions as may be necessary to achieve the plan's goals for conservation and survival of the species;

(2) Objective, measurable criteria which, when met, would result in a determination in accordance with the provisions of section 4 of the Act, that the species be removed from the Federal List of Endangered and Threatened Wildlife and Plants (List); and

(3) Estimates of the time required and cost to carry out the plan's goal and to achieve intermediate steps toward that goal.

Recovery plans are intended to provide guidance to the Service, States, and other partners on methods of eliminating or ameliorating threats to listed species and on criteria that may be used to determine when recovery is achieved. However, recovery plans are not regulatory documents and cannot substitute for the determinations and promulgation of regulations required under section 4(a)(1). Determinations to reclassify a species on the list made under section 4(a)(1) must be based on the best scientific and commercial data available at the time of the determination, regardless of whether these data differ from the recovery plan. They must reflect determinations made in accordance with sections 4(a)(1) and 4(b) of the Act. Specifically, section

4(a)(1) requires that the Secretary determine whether a species is endangered or threatened (or not) because of one or more of five threat factors. Section 4(b) requires the determination made under section 4(a)(1) as to whether a species is endangered or threatened because of one or more of the five factors be based on the best scientific and commercial data available.

In the course of implementing conservation actions for a species, new information is often gained that requires recovery efforts to be modified accordingly. There are many paths to accomplishing recovery of a species, and recovery may be achieved without all criteria being fully met. For example, one or more criteria may have been exceeded while other criteria may not have been accomplished, yet the Service may judge that, overall, the threats have been minimized sufficiently or are not of sufficient imminence, intensity, or magnitude, and the species is robust enough, to reclassify the species from endangered to threatened. In other cases, recovery opportunities may have been recognized that were not known at the time the recovery plan was finalized. These opportunities may be used instead of methods identified in the recovery plan.

Likewise, information on the species may be learned that was not known at the time the recovery plan was finalized. The new information may change the extent that criteria need to be met for recognizing recovery of the species. Overall, recovery of the species is a dynamic process requiring adaptive management, planning, implementing, and evaluating the degree of recovery of a species that may, or may not, fully follow the guidance provided in a recovery plan.

Thus, while the recovery plan provides important guidance on the direction and strategy for recovery and indicates when a rulemaking process may be initiated, the determination to reclassify a species on the Federal List is ultimately based on an analysis of whether the species is endangered or threatened, as defined by the Act. The following discussion provides a brief review of the recovery planning for wood storks, as well as an analysis of the recovery objectives and criteria as they relate to evaluating the status of the species.

We published the original recovery plan for the U.S. breeding population of wood stork on September 9, 1986, and revised it on January 27, 1997 (USFWS 1997). The recovery plan includes reclassification criteria and delisting criteria: The recovery criteria for the U.S. breeding population DPS of wood storks state that reclassification from endangered to threatened could be considered when there are 6,000 nesting pairs and annual average regional productivity is greater than 1.5 chicks per nest per year (both calculated over a 3-year average). Delisting could be considered when there are 10,000 nesting pairs (50 percent of historical population), and annual regional productivity greater than 1.5 chicks per nest per year (both calculated over a 5-year average from the time of reclassification). As a subset of the 10,000 pairs, a minimum of 2,500 successful nesting pairs must occur in the Everglades and Big Cypress systems and 3,500 in the South Florida Ecosystem as defined by the South Florida Multi-Species Recovery Plan (USFWS 1999, p. 4–417).

Recovery Actions

The recovery plan identifies four primary recovery actions for the U.S. breeding population of the wood stork: (1) Protect currently occupied habitat, (2) restore and enhance habitat, (3) conduct applied research necessary to accomplish recovery goals, and (4) increase public awareness. These primary recovery actions have been initiated. Many of the actions listed under these categories are of high priority to implement and are ongoing.

Recovery Task (1): Protect currently occupied habitat. At a minimum, for continued survival of the U.S. breeding population, currently occupied nesting, roosting, and foraging habitat must be protected from further loss or degradation. Watersheds supporting natural nesting habitat should remain unaltered, or be restored to function as a natural system if previously altered. Recovery actions under this recovery task include: (1.1) Locate important habitat, (1.2) prioritize habitat, (1.3) work with private landowners to protect habitat, (1.4) acquire land, (1.5) protect sites from disturbance, and (1.6) use existing regulatory mechanisms to protect habitat.

Recent habitat models (*e.g.,* Gawlik 2002; Herring 2007; Borkhataria 2009; Rodgers *et al.* 2010; Borkhataria *et al.* 2012); ongoing annual monitoring of nesting colonies (*e.g.,* Cook and Koboza 2012; Brooks and Dean 2008; Murphy and Coker 2008; Winn *et al.* 2008; Frederick and Meyer 2008); surveys of nesting colony core foraging areas in Florida, Georgia, and South Carolina (*e.g.,* Herring 2007; Bryan and Stephens 2007; Lauritsen 2010; Tomlinson 2009; Meyer 2010); and satellite-telemetry studies (*e.g.,* Hylton 2004; Hylton *et al.* 2006; Bryan *et al.* 2008; Borkhataria 2009; Lauritsen 2010; Borkhataria *et al.* 2012) are helping to update conservation information and tools that are used to identify, prioritize, protect, restore, and acquire important wood stork habitats. Core foraging areas near large colonies on protected lands, like Corkscrew Swamp Sanctuary in Florida, Harris Neck National Wildlife Refuge in Georgia, and Washo Reserve in South Carolina, have been identified. However, alteration and loss of foraging habitat continues as a threat to recovery, as such habitat continues to be lost today through the continual expansion of the human environment, resulting in new development and associated roads and other infrastructure. The Service has developed a brochure, Wood Stork Conservation and Management for Land Owners, to assist public and private land managers in protecting and restoring wood stork habitat (USFWS 2001). The Wood Stork Habitat Management Guidelines (Ogden 1990) have also been updated (Bryan 2006) and are an important conservation tool to provide guidance on protecting wood storks and their habitats. In an effort to minimize loss of wetland habitats important to wood stork recovery, like those within the core foraging area of a nesting colony, the Service's South and North Florida Ecological Services Field Offices have also developed a ''May Affect'' key to assist regulators with review of wetland dredge and fill permit applications.

Lands being purchased for conservation through Federal, State and private acquisition programs also contribute to wood stork recovery. *Florida Forever* is the largest State public land acquisition program of its kind in the United States with approximately 9.9 million acres managed for conservation in Florida; more than 2.5 million acres were purchased under the *Florida Forever* and *Preservation 2000* programs (*http://www.dep.state.fl.us/lands/fl_forever.htm*). Listed species, wetlands quality, and other attributes that affect wood storks are considered in the ranking criteria for lands purchased in these programs. Southeastern U.S. State natural resource agency acquisition programs include: Florida Forever; Georgia Land Conservation Program; South Carolina Land Legacy and Conservation Bank Act; North Carolina Natural Heritage Trust Fund, Parks and Recreation Trust Fund, Clean Water Management Trust Fund, Agricultural Development and Farmland Preservation Trust Fund; Alabama Forever Wild Trust Fund; and Mississippi Wildlife Heritage Fund. The

purpose of these programs is to preserve statewide networks of land and water resources by providing land conservation funding options that may include grants, low interest loans, and tax incentives which augment other private, local, State, and Federal funding sources to achieve the permanent conservation of land through the acquisition of conservation easements and fee simple ownership.

Consistent with the recent adoption of the Department of the Interior policy on climate change adaptation (523 DM 1; *http://elips.doi.gov/elips/0/doc/3741/Page1.aspx*) and a similar policy by the Service (056 FW 1; *http://www.fws.gov/policy/056fw1.html*), we will evaluate and address the impacts of climate change in our planning and decision making, as appropriate. Also, the Landscape Conservation Cooperative (LCC) initiative will likely provide information that informs wood stork recovery through landscape-level conservation strategies to restore, manage, and conserve the biodiversity of the region in the face of both climate change and intense development pressure associated with a rapidly growing human population. Ongoing and forthcoming efforts at State, county, and other local levels related to climate change adaptation also are likely to inform how we revise and implement the recovery plan for the wood stork. Future updates to the recovery plan will consider and include emerging information such as on-going and projected change in climate and related effects on wood stork habitat and will help to guide future recovery efforts.

Recovery Task (2): Restore and enhance habitat. A prerequisite for recovery of the wood stork in the southeastern United States is the restoration and enhancement of suitable habitat throughout the mosaic of habitat types used by this species. Recovery actions include: (2.1) Restore the Everglades and Big Cypress systems, (2.2) enhance nesting and roosting sites throughout the range, and (2.3) enhance foraging habitat by modifying hydrologic regimes in existing artificial impoundments to maximize use by wood storks.

Wood storks depend upon a mosaic of wetlands throughout the coastal plain of the southeastern United States for breeding and foraging. Ecosystems and wetlands are being restored throughout the southeastern United States through programs such as the Comprehensive Everglades Restoration Program (CERP) (RECOVER 2009); Kissimmee River Restoration Project, which includes a goal to restore over 40 square miles of river and floodplain ecosystem including 43 miles of meandering river channel and 27,000 acres of wetlands (USACE 2011); and Upper St. Johns Basin Restoration Project, which has enhanced and restored 150,000 acres of marsh (SJRWMD 2011). These and other large-scale wetland restoration projects are significantly contributing to wood stork recovery by reducing the threat of habitat loss. Research by Tsai *et al.* (2011, p. 5) provides recommendations for enhancing nesting habitat and concludes that management and conservation priority should be given to colonies that are large, have been in existence for more than 10 years, and are located on islands rather than mainland shorelines. Management actions that can enhance the isolation of colonies from the mainland apparently are very effective as colonies on true islands are less likely to be extirpated and are much more likely to be colonized than those that have partial or complete connection with the mainland (Tsai *et al.* 2011, p. 5). These recommendations will inform efforts to update recovery actions and initiatives.

Management plans such as State wildlife action plans (*http://www.wildlifeactionplans.org/*) help to identify important habitats on which to focus conservation efforts. Other management plans such as the North American Waterbird Conservation Plan (2002) and the North American Waterfowl Management Plan (USFWS 2011) also help to identify focus areas for conservation. By highlighting important habitats or areas, such as the ACE Basin and Winyah Bay in South Carolina, funds and conservation initiatives are directed towards restoring these important habitat areas and contribute to recovery by reducing the threat due to loss of habitat. Thousands of acres are being protected, enhanced, restored, and brought under conservation easements to assist in wildlife conservation through programs such as the Wetland Reserve Program (WRP) and the Farm Bill, including 70,000 acres of wetlands in Alabama, Florida, Georgia, Mississippi, North Carolina, and South Carolina in 2010 (NRCS 2011). The WRP is a voluntary program offering landowners the opportunity to protect, restore, and enhance wetlands on their property.

The U.S. Department of Agriculture, Natural Resources Conservation Service (NRCS) provides technical and financial support to help landowners with their wetland restoration efforts. The goal of the NRCS is to achieve the greatest wetland functions and values, along with optimum wildlife habitat, on every acre enrolled in the program. This program offers landowners an opportunity to establish long-term conservation and wildlife practices and protection and, therefore, provides some benefits to wood stork recovery. In Florida, the WRP program has restored over 200,000 acres of wetlands (Simpkins, Service, pers. comm., 2011) and more than 115,000 acres in Alabama, Georgia, and South Carolina. A majority of the Florida WRP-restored acres have been within the Everglades and Big Cypress systems. A 2006 WRP restoration of 200 acres of farmland in Camilla, Georgia, now supports the newest Georgia wood stork colony, with over 100 nesting pairs annually. This task will be complete once viable nesting occurs throughout the range of this DPS. The most significant wetland restoration goal for wood storks is to recover viable nesting subpopulations in the traditional Everglades and Big Cypress nesting areas, including Corkscrew Swamp Sanctuary, as outlined by CERP. Overall, future wetland restoration efforts in the southeast United States will be beneficial to wood stork recovery.

Future updates to the recovery plan will consider emerging information on climate change and possible effects on wood stork habitat restorations and enhancements and will help to guide future recovery efforts.

Recovery Task (3): Conduct applied research necessary to accomplish recovery goals. Recovery efforts for the wood stork will be more effective with a better understanding of population biology, movement patterns of U.S. and neighboring populations of wood storks, foraging ecology and behavior, the importance of roost sites, and the possible impacts of contaminants. Recovery actions include: (3.1) Determine movement patterns of U.S. and neighboring populations of wood storks, (3.2) determine population genetics, (3.3) monitor productivity of stork populations, (3.4) monitor survivorship of stork populations, (3.5) determine extent of competition/cooperation between wood storks and other wading birds in mixed nesting colonies, (3.6) determine foraging ecology and behavior, (3.7) determine the importance of roost sites, and (3.8) determine the impacts of contaminants on wood stork populations. The following is a summary of several recent monitoring and research findings.

The South Florida Wading Bird Report (1996–2012) annually reports on habitat monitoring and research with respect to the CERP and foraging and nest monitoring projects for wood storks and wading birds utilizing the Everglades and Big Cypress systems. This report provides an annual

assessment on the Restoration Coordination and Verification Program (RECOVER), the system-wide science arm of the CERP. Per Recovery Action 3.1 and 3.6, satellite-telemetry studies are providing new insight into movement patterns (*e.g.,* Hylton 2004; Bryan *et al.* 2008; Borkhataria 2009; Lauritsen 2010). Surveys to determine foraging distances from nesting colonies and satellite-telemetry research are helping to update our understanding of wood stork foraging ecology and of core foraging areas (*e.g.,* Herring 2007; Bryan and Stephens 2007; Borkhataria 2009; Borkhataria *et al.* 2012; Meyers 2010; Lauritsen 2010; Tomlinson 2009). Satellite-telemetry data and initiation of additional banding studies are helping to refine survival estimates (Borkhataria 2009, pp. 63–64) for population modeling (Borkhataria 2009) as identified under Recovery Action 3.4. This population viability analysis demonstrated that, despite the recent population growth, the south Florida portion of the population could decline to a level that cannot be reversed even if some individuals remain in the coming 50-year period (Borkhataria 2009, p. 15).

Recent and ongoing systematic reconnaissance flights of the Everglades, Kissimmee River, water conservation areas, Big Cypress National Preserve, and Upper St. Johns River are monitoring wood stork abundance and distribution in south Florida (Cheek 2012, pp. 23–26; Alvarado 2012, pp. 32–42; Nelson 2010, p. 40; D. Hall, SJRWMD, pers. comm., 2008). Annual synoptic nesting colony surveys help to monitor the status of the breeding population. Per Recovery Action 3.3, recent productivity research and monitoring efforts have documented productivity rates to be similar to rates documented between the 1970s and 1990s (Rodgers *et al.* 2008; Bryan and Robinette 2008). Rodgers *et al.* (2008, p. 25) recommends developing an unbiased estimator of productivity that takes into consideration the lack of nesting during some years to more accurately estimate wood stork productivity at the regional level.

A prime example of how research can influence management for wood stork recovery is Borkhataria *et al.* (2012). This research documented the effects of water management on juvenile stork survival in south Florida and confirms the CERP goal of returning Everglades wood stork nest initiation to an earlier time frame so that chicks are fledging prior to the summer rainy season. To be successful reproductively, wood storks in south Florida require prey be available during the nesting season, with particularly high energy demands when chicks are growing and fledging (Frederick *et al.* 2008, p. 3). This typically happens during the winter/spring dry season in south Florida when water levels recede most reliably.

A genetic structuring and haplotype network analysis comparison indicates that either a demographic decline or a recent evolutionary bottleneck reduced the levels of genetic variability in the U.S. population (Lopes *et al.* 2011, p. 1911). The genetic structuring assessment revealed no significant differentiation, indicating that U.S. and Brazilian wood stork populations were only recently separated or that gene flow between these populations continues to occur at low levels. The haplotype network analysis indicated low current levels of gene flow between populations that were closely related in the past (Lopes *et al.* 2011, p. 1911).

Recovery Task (4): Increase public awareness. Wood storks utilize a wide variety of wetland habitats. They are visually unique and generate interest from the public. These factors have made the wood stork the subject of many environmental education materials and programs. Many brochures, videos, and educational packets are available. Recovery actions include: (4.1) Increase awareness and appreciation through educational materials, and (4.2) provide opportunities for the public to view wood storks in captivity.

Examples of such wood stork educational efforts to increase public awareness can be found on our Web site (*http://www.fws.gov/northflorida/WoodStorks/wood-storks.htm*) and the Web sites of many of our recovery partners, including the Everglades National Park (*http://www.nps.gov/ever/naturescience/woodstork.htm*), Florida Fish and Wildlife Conservation Commission (*http://myfwc.com/research/wildlife/birds/wood-storks/*), Georgia Department of Natural Resources *(http://www.georgiawildlife.com/sites/default/files/uploads/wildlife/nongame/pdf/accounts/birds/mycteria_americana.pdf*), South Carolina Department of Natural Resources (*http://www.dnr.sc.gov/cwcs/pdf/Woodstork.pdf*), University of Florida (*http://www.wec.ufl.edu/faculty/frederickp/woodstork/*), Audubon Society (*http://birds.audubon.org/species/woosto),* Corkscrew Sanctuary Swamp (*http://www.corkscrewsanctuary.org/Wildlife/Birds/profiles/wost.pdf*), and others.

Opportunities for the public to view wood storks in the wild include almost all National Wildlife Refuges (NWR) and National Parks and Preserves in Florida and coastal Georgia and South Carolina, including the Everglades National Park, Ten Thousand Island NWR, J.N. Ding Darling NWR, Loxahatchee NWR, Pelican Island NWR, Merritt Island NWR, Harris Neck NWR, and ACE Basin NWR. Several wood stork nesting colonies can also be seen at public observation areas that do not disturb the colony, such as Audubon's Corkscrew Swamp Sanctuary, Parotis Pond in Everglades National Park, Pelican Island NWR, St. Augustine Alligator Farm, Jacksonville Zoo and Gardens, and Harris Neck NWR.

Recovery Achieved

The recovery criteria for the U.S. breeding population DPS of wood storks state that reclassification from endangered to threatened could be considered when there are 6,000 nesting pairs and annual average regional productivity is greater than 1.5 chicks per nest per year (both calculated over a 3-year average). Although variable, productivity appears to be sufficient to support continued population growth as evidenced by the increasing nesting population and range expansion.

1. Nesting pairs. The U.S. breeding population of the wood stork has been increasing since it was listed in 1984 (Brooks and Dean 2008, p. 58; Borkhataria 2009, p. 34). Regional synoptic nesting surveys to census wood stork colonies have been continuous in south Florida and Georgia since 1976 and in South Carolina since 1981. Nest censuses of the entire breeding range were conducted in 1975–1986, 1991, 1993–1995, 1997, 1999, and 2001–2013 (Table 1) with a census of almost every active colony. The 3-year average for nesting pairs has exceeded the reclassification criterion of 6,000 every year since 2003 (Table 2). However, the nesting pair average is well below the 5-year average of 10,000 nesting pairs (a benchmark for delisting), and the 5-year averages for nesting in the Everglades and Big Cypress Systems are below 2,500 nesting pairs (another benchmark for delisting), as nesting in south Florida remains variable (Table 2).

TABLE 2—WOOD STORK NESTING DATA IN THE SOUTHEASTERN UNITED STATES AND 3-YEAR AVERAGES (USFWS 2013). SOUTH FLORIDA INCLUDES WOOD STORK NESTING IN THE FOLLOWING FLORIDA COUNTIES: BROWARD, COLLIER, HENDRY, LEE, MARTIN, MIAMI-DADE, MONROE, AND PALM BEACH

Year	Total		South FL		Central/North FL		GA		SC		NC	
	Nesting pairs	3-yr avg	Nesting pairs	3-yr avg	Nesting pairs	3-yr avg	Nesting pairs	3-yr avg	Nesting pairs	3-yr avg	Nesting pairs	3-yr avg
1981	4,442	.....	2,428	.....	1,728	.....	275	.....	11			
1982	3,575	.....	1,237	.....	2,183	.....	135	.....	20			
1983	5,983	4,667	2,858	2,174	2,742	2,218	363	258	20	17		
1984	6,245	5,268	1,245	1,780	4,402	3,109	576	358	22	21		
1985	5,193	5,807	798	1,634	3,764	3,636	557	499	74	39		
1986	.....	.....	643	895	.....	.....	648	584	120	72		
1987	.....	.....	100	514	.....	.....	506	570	194	129		
1988	.....	.....	755	499	.....	.....	311	488	179	164		
1989	.....	.....	515	457	.....	.....	543	453	376	250		
1990	.....	.....	475	582	.....	.....	709	521	536	364		
1991	4,073	.....	550	513	1,890	.....	969	740	664	525		
1992	.....	.....	1,917	981	.....	.....	1,091	923	475	558		
1993	6,729	.....	587	1,018	3,675	.....	1,661	1,240	806	648		
1994	5,768	.....	741	1,082	2,847	.....	1,468	1,407	712	664		
1995	7,853	6,783	1,140	823	4,383	3,635	1,501	1,543	829	782		
1996	.....	.....	1,215	1,032	.....	.....	1,480	1,483	953	831		
1997	.....	.....	445	933	.....	.....	1,379	1,453	917	900		
1998	.....	.....	478	713	.....	.....	1,665	1,508	1,093	988		
1999	.....	.....	2,674	1,190	.....	.....	1,139	1,394	520	843		
2000	.....	.....	3,996	2,383	.....	.....	566	1,123	1,236	950		
2001	5,582	.....	2,888	3,186	358	.....	1,162	956	1,174	977		
2002	7,855	.....	3,463	3,449	2,000	.....	1,256	995	1,136	1,182		
2003	8,813	7,417	1,747	2,699	4,057	2,138	1,653	1,357	1,356	1,222		
2004	8,379	8,349	1,485	2,232	3,241	3,099	1,596	1,502	2,057	1,516		
2005	5,572	7,588	591	1,274	1,713	3,004	1,817	1,689	1,419	1,611	32	
2006	11,279	8,410	2,648	1,575	4,568	3,174	1,928	1,780	2,010	1,829	125	
2007	4,406	7,086	696	1,312	857	2,379	1,054	1,600	1,607	1,679	192	116
2008	6,118	7,268	344	1,229	1,494	2,306	2,292	1,758	1,839	1,819	149	155
2009	12,720	7,748	5,816	2,285	3,612	1,988	1,676	1,674	1,482	1,643	134	158
2010	8,141	8,993	1,220	2,460	2,600	2,571	2,708	2,225	1,393	1,571	220	168
2011	9,579	10,147	2,131	3,056	3,161	3,124	2,160	2,181	2,031	1,635	96	141
2012	8,452	8,620	1,234	1,528	3,305	3,137	1,905	2,258	1,827	1,750	181	166
2013	11,046	9,692	3,059	2,141	3,889	3,452	1,873	1,979	2,020	1,959	205	161

2. Productivity. Researchers need to systematically determine reproductive success (number of fledged young per nest and number of fledged young per successful nest) for a majority of the colonies in the same year(s) to better estimate productivity of the breeding population (USFWS 1997, p. 24). Since nesting success often exhibits a significant negative trend with hatching date (Rodgers and Schwikert 1997, p. 85), the entire nesting season must be sampled to avoid biasing reproductive success data based on a few visits (Rodgers 2005, p. 1). The Service acknowledges that the productivity dataset is incomplete, with less than 25 percent of the colonies surveyed for productivity during recent years and 50 percent surveyed between 2003 and 2007. During this time period, Brooks and Dean (2008, p. 56) indicate the average productivity rate for all colonies monitored in the southeastern United States was 1.2 chick/nest attempt between 2003 and 2005; 1.5 chick/nest attempt between 2004 and 2006; and 1.5 chick/nest attempt between 2003 and 2006 (Brooks and Dean 2008, p. 56). Due to funding and manpower constraints, rangewide, statewide, and regional monitoring of wood stork productivity only has occurred episodically (*e.g.,* early 1980s and 2000s). As 80 to 90 wood stork colonies are now active annually, Rodgers *et al.* (2008, p. 32) identifies that there is a need to develop a long-term program of monitoring that relies on monitoring of fewer colonies. The following are summaries of recent productivity monitoring in Florida, Georgia, and South Carolina. The full productivity data set can be viewed at: *http://www.fws.gov/northflorida/WoodStorks/wood-storks.htm.*

Florida: Rodgers *et al.* (2008, p. 25) reported a combined production rate for 21 north- and central-Florida colonies from 2003 to 2005 of 1.19+0.09 fledglings per nest attempt (n = 4,855 nests). Rodgers *et al.* (2009, p. 3) reported the St. Johns River basin production rate of 1.49+1.21 fledglings per nest attempt (n = 3,058 nests) and, for successful nests, an average fledgling rate of 2.26+0.73 fledglings per nest attempt (n = 2,105 nests) from 2004 to 2008. The Jacksonville Zoological Gardens and Disney Wilderness Preserve colonies report productivity rates of 2.0 and 0.5, respectively, in 2011 and 2.2 and 0.8 for 2012. The Palm Beach County Solid Waste Authority colony was documented with 1.08 and 0.46 fledgling per nesting attempt in 2011 and 2012, respectively (M. Morrison, PBC, pers. comm., 2013). The Corkscrew Swamp Sanctuary colony near Naples, Florida, documented no nesting in 2010–12 (Lauritsen 2010, p. 12; 2011, p. 14; and 2012, p. 12). Cook (2011, p. 2) reports that the 2011 productivity in the Everglades was relatively low and that all 820 nests failed in 2012 (Cook, 2012, p. 2).

Georgia: Bryan and Robinette (2008, p. 20) reported rates of 2.3 and 1.6 fledged young per nesting attempt in 2004 and 2005, respectively, for South Carolina and Georgia. The 2011 and 2012 productivity rates for Georgia were 1.32 and 1.13 (T. Keyes, Georgia DNR, pers. comm., 2012). During the past 29 years of data collection (1983–2012) in

Georgia, the weighted average of all years and colonies was 1.76+0.8 (158 colony-years) with a range of 0.33 to 2.65 (T. Keyes, Georgia DNR, pers. comm., 2013).

South Carolina: Murphy and Coker (2008, p. 5) reported that since the wood stork was listed in 1984, South Carolina colonies averaged 2.08 young per successful nest with a range of 1.72 to 2.73. In 2011, South Carolina productivity was 1.6 fledged young per nest at two colonies and 1.1 in 2012 at seven colonies monitored (C. Hand, SC DNR, pers. comm., 2013).

Based upon the nesting population criteria in the recovery plan, we considered reclassifying the U.S. breeding population of the wood stork to threatened status because wood storks and their habitat would continue to receive the protections of the Act, and management efforts continue to protect, maintain, enhance, and restore habitat to support a growing population. The U.S. breeding population of the wood stork has surpassed the recovery criteria for nesting pairs outlined as necessary for reclassification. As shown in Table 2 of this document, the nesting population is increasing and well above the reclassification benchmark (Brooks and Dean 2008, p. 58; and Table 2). The total number of nesting colonies has remained stable in south Florida, and the number of colonies in central and north Florida, Georgia, South Carolina, and North Carolina continue to increase (Ogden *et al.* 1987, p. 754; Brooks and Dean 2008, p. 54; Table 1). The nesting range continues to expand with new colonies documented in North Carolina, South Carolina, western Georgia, and northern Florida. Although variable and not well documented, productivity appears to be sufficient to support continued population growth, as evidenced by the increasing population and range expansion described above. Population trends suggest that the overall population may approach the delisting benchmark of 10,000 nesting pairs during the next 15 to 20 years. Nesting numbers show a stable or increasing population, however, data are not available to evaluate the productivity criterion of 1.5 chicks per nest per year.

Summary of Factors Affecting the Species

Section 4 of the Act and its implementing regulations (50 CFR part 424) set forth the procedures for listing, reclassifying, or removing a species from the Federal List of Endangered and Threatened Wildlife. Under section 3 of the Act, a species is ''endangered'' if it is in danger of extinction throughout all or a ''significant portion of its range'' and is ''threatened'' if it is likely to become endangered within the foreseeable future throughout all or a ''significant portion of its range.'' The word ''range'' refers to the range in which the species currently exists, and the word ''significant'' refers to the value of that portion of the range being considered to the conservation of the species. The ''foreseeable future'' is the period of time over which events or effects reasonably can or should be anticipated, or trends extrapolated. A species may be determined to be an endangered or threatened species due to one or more of the five factors described in section 4(a)(1) of the Act: (A) The present or threatened destruction, modification, or curtailment of its habitat or range; (B) overutilization for commercial, recreational, scientific, or educational purposes; (C) disease or predation; (D) the inadequacy of existing regulatory mechanisms; or (E) other natural or manmade factors affecting its continued existence.

The following analysis examines all five factors currently affecting or that are likely to affect the wood stork within the foreseeable future:

A. The Present or Threatened Destruction, Modification, or Curtailment of Its Habitat or Range

Throughout its range in the southeastern United States, wood storks are dependent upon wetlands for breeding and foraging. Preventing loss of wood stork nesting habitat and foraging wetlands within a colony's core foraging area is of the highest priority. In addition, winter foraging habitat is important to recovery, as it may determine the carrying capacity of the U.S. wood stork DPS. While the immediacy and the magnitude of this factor are substantially reduced when compared to when this species was originally listed, as the population is larger and occupies a much larger breeding season and nonbreeding season range, the destruction, fragmentation, and modification of its wetland habitats continues to occur and could accelerate in the absence of the protections of the Act.

Hefner *et al.* (1994, p. 21) estimated that 1.3 million acres of wetlands lost in the southeastern United States between the mid-1970s and mid-1980s were located in the Gulf-Atlantic Lower Coastal Plain, an area upon which wood storks are dependent. Ceilley and Bartone (2000, p. 70) suggest that short hydroperiod wetlands provide a more important pre-nesting food source and provide for a greater early nestling survivorship for wood storks than previously known. Wetlands that wood storks use for foraging are being lost through permitted activities where mitigation is provided. However, it is not known if wood stork foraging wetlands are being replaced with like-quality foraging wetlands within the core foraging area of an impacted colony. Lauritsen (2010, pp. 4–5) suggests that today's mitigation practices lead to a disproportionate loss of short hydroperiod wetlands. The impacts of the loss of short hydroperiod (isolated) wetlands, which supply most of the food energy for initiating reproduction (Fleming *et al.* 1994, p. 754), may result in no nesting or abandonment of nesting attempts by wood storks at colonies like Corkscrew Swamp Sanctuary. Lauritsen (2010, p.2) indicates the historic extent of wet prairies within the core foraging area of the Corkscrew Swamp colony has decreased by 70 percent, while deep marsh habitat has increased when compared to pre-development conditions. Frederick and Meyer (2008, p. 15) suggest that the decline in colony size in Florida reflects the increasingly fragmented nature of Florida's wetlands resulting from development. Future projections from reports like Florida 2060 (1000 Friends of Florida, *http://www.1000friendsofflorida.org/connecting-people/florida-smart-growth-advocates-2/*) suggest 7 million acres of land could be converted from rural and natural to urban uses and wetland habitats will become more isolated and degraded.

The decline of south Florida's Everglades and Big Cypress ecosystems is well-documented (*e.g.,* Davis and Ogden 1994). Prior to 1970, a majority (70 percent) of the wood stork population nested south of Lake Okeechobee and declined from 8,500 nesting pairs in the early 1960s to around 500 pairs in the late 1980s and early 1990s (USFWS 1997, p. 10). The primary cause of this decline was the loss of wetland function of these south Florida ecosystems that resulted in reduced prey availability or loss of wetland habitats (USFWS 1997, p. 10).

Wood storks use manmade wetlands for foraging and breeding purposes. Human-made wetlands include, but are not limited to, storm water treatment areas and ponds, golf course ponds, borrow pits, reservoirs, roadside ditches, agricultural ditches, drainages, flow-ways, mining and mine reclamation areas, and dredge material sites. The impacts can be positive in certain scenarios as these wetlands can provide protected foraging and nesting habitat, and may offset some losses of natural wetlands caused by

development. A significant number of wood stork colonies are located where water management practices can impact the nesting habitat negatively. Colonies that are perpetually flooded will have no tree regeneration. Draining surface waters of a colony's wetland or pond will prevent wood storks from nesting, and lowered water levels after nest initiation facilitate raccoon predation. Lowering surface water or water table may occur through water control structures, manipulating adjacent wetlands, or water withdrawals from the local aquifer and can prevent wood storks from nesting or cause colony failure.

Water Management and Prey Availability

Water management and the effect it has on prey availability to nesting wood storks in south Florida and the Everglades continue to impact wood stork recovery. A key wood stork goal and prediction of CERP relates to the ecological bird-prey-hydrology relationship. The goal to return natural flows and hydropatterns is predicted to result in a return to natural timing of nesting, the restoration of large wood stork nesting colonies in the coastal zone and recovery of wood stork breeding populations in the Everglades. The early results from CERP suggest that wood storks are responding to the altered water management regimes and other factors by nesting more consistently in the coastal zone and by increasing populations (Frederick 2012, p. 38), however, there is little evidence that timing of nesting is improving for breeding wood storks in south Florida. Based upon their analysis of fledgling survival, Borkhataria *et al.* 2012 (p.525) notes the possibility that south Florida is currently acting as a population sink. Frederick (2012, p. 44) states that later nesting increases the risk of mortality of nestlings that have not fledged prior to the onset of the wet season, which is likely the difference between the south Florida segment of the population being a source or a sink to the wood stork population. CERP is a significant long-term conservation effort that, if successful in restoring natural flows and hydropatterns, will greatly benefit wood stork recovery. Frederick (2012, p. 38) indicates that full restoration of wading bird populations in the Everglades is predicted as a result of full restoration of key historical hydropatterns, which have not occurred yet as there are many restoration projects and management regimes yet to be implemented. Another concern, Borkhataria *et al.* (2012, p. 517) show a relationship between temporally fluctuating hydrologic factors and juvenile wood stork survival rates, highlighting the need for water management to also consider the timing of managed wetland manipulations, as human-induced changes have impacts on when birds nest and ultimately how the population is fairing. In years with high water levels that resulted in unsuitable foraging habitat for post-fledging juveniles studied in the Everglades, the young birds moved into more terrestrial agricultural and developed landscapes and were more vulnerable to mortality, which may have been related to relatively low aquatic prey density in those areas (Borkhataria *et al.,* p. 524)

Conservation managers implement water management regimes at several large impoundments in Georgia, South Carolina and North Carolina that support wood stork recovery. Several impounded sites support nesting colonies and the water management at these sites help to promote nesting and provide protection from predators. Other impoundments near nesting colonies are managed to make prey available to the nesting wood storks to feed their chicks and to chicks when they fledge from the colonies through water drawdowns that help concentrate prey at optimal times during the nesting season.

Sea-Level Rise

Climate change is on-going and one of its many effects involves sea level rise (SLR), which poses widespread and continuing threats to coastal environments at global, regional, and local levels (Melillo *et al.* 2014, pp. 9–10, 397). The effects of sea level rise can include complete inundation of coastal habitat, as well as intrusion of saltwater into estuaries and more inland areas, including freshwater marshes, which can result in changes in the suitability of habitat for various animal species. These and other changes both now and in the future depend on the magnitude of the SLR and other factors such as storm surges (e.g., SCDNR 2013 p. 52; Williams 2013, pp. 188, 191).

Since about 1880, when reliable record-keeping began for sea level, global sea level has risen about 200 mm (8 in) (Melillo et al., 2014, p. 21). For more than a century the rate of global mean SLR has been greater than at any time over the previous two millennia, and the rate is accelerating: from 1901–2010 the average increase was 1.7 mm/yr (0.07 (in/yr), from 1971–2010 it was 2.0 mm/yr (0.08 in/yr), and between 1993–2010 it was 3.2 mm/yr (0.13 in/yr) (Intergovernmental Panel on Climate Change (IPCC) 2013, p. 11). Although SLR is due in part to natural variability in the climate system, scientists attribute the majority of the observed increase in recent decades to human activities that contribute to ocean thermal expansion related to ocean warming, and melting of ice: The IPCC reported that approximately 75 percent of the observed increase in global mean SLR since the early 1970's can be explained due to melting of glaciers and ocean thermal expansion from warming (ibid.), and an estimated 87 percent of the trend in ocean thermal expansion since 1970 has been induced by human activity (Marcos and Amores 2014).

Trend data show increases in sea level have been occurring throughout the southeastern Atlantic and Gulf coasts and according to Mitchum (2011, p. 9) the overall magnitude in the region has been slightly higher than the global average. At local levels, SLR varies by location as well as seasonally. State-by-state averages are available based on tidal gauge measurements. Measurements summarized for stations at various locations in Florida indicate SLR there has totaled approximately 200 mm (8 in.) over the past 100 years, with an average of about 3.0 mm/yr (0.12 in/yr) since the early 1990's (Ruppert 2014, p. 2). The relatively few tidal gauges in Georgia, South Carolina, and southern North Carolina also show increases, the largest being in South Carolina (NOAA Web site *http://tidesandcurrents.noaa.gov/sltrends/sltrends.shtml*, accessed May 2 and May 9, 2014).

Continued global SLR is considered virtually certain to occur throughout this century and beyond (Stocker et al., 2013, p. 100; Levermann *et al.* 2013, entire). Depending on the methods and assumptions used, however, the range of possible scenarios of global average SLR for the end of this century is relatively large, from a low of 0.2 meters (m) (approximately 8 in.) to a high of 2 m (approximately 78 in., i.e., 6.6 ft) (Parris et al. 2012, pp. 2, 10–11). Although this relatively wide range reflects considerable uncertainty about the exact magnitude of change, it is notable that increases are expected in all cases, and at rates that will exceed the SLR observed since the 1970's (IPCC 2013, pp. 25–26).

The highest projection of global sea level rise typically cited is 2 m (approximately 6 ft 7 in) by 2100, which is the high end of the range of projections provided in a paper by Pfeffer *et al.* (2008). In that paper, the projections range from 0.8–2.0 m (2 ft 7.5 inches–6 ft 7 inches). Based on analysis of glaciological conditions that would be required for a sea level rise of 2 m or more, however, the authors

concluded that: (1) increases of more than 2 m are ''*physically untenable;*'' (2) a rise of about 2 m by 2100 ''*could occur under physically possible glaciological conditions but only if all variables are quickly accelerated to extremely high limits*''; and (3) ''*more plausible but still accelerated conditions*'' would result in a rise of about 0.8 m (2.6 ft) by 2100. They also stated that the assumptions underlying their range of sea level rise contained ''substantial uncertainties'' and recognized the need for more study in order to support improvements in projections (Pfeffer *et al.,* 2008, p. 1342). Thus it is logical to conclude that although SLR of 2 m (6 ft 7 in) by the end of the century is theoretically possible, it is not particularly plausible. This interpretation has been supported in subsequent literature on SLR. For example, in their review of SLR projections, Nichols *et al.* concluded that the upper part of the projected ranges are possible but not likely to occur (Nicholls *et al.* 2011, pp. 165, 168).

The IPCC's most recent projections of SLR are based on the four climate change scenarios they currently use, with a base period of 1986–2005 for comparison. The range of global mean SLR they project for 2046–2065 is 0.24–0.30 m (9.5–11.8 in.), and for 2081–2100 the range is 0.40–0.63 m (15.8–24.0 in.) (IPCC 2013, pp. 23–26). The IPCC acknowledges that higher projections have been made using other types of sea-level rise models and underlying assumptions, but notes a lack of consensus in the scientific community about those processes and thus the IPCC's assessed confidence in those projections (which include the higher projections of SLR), is low (IPCC 2013, p. 26).

The Third National Climate Assessment (NCA) projects that global mean sea level will rise another 1–4 feet (i.e., approximately 0.3–1.2 m) in this century (Melillo *et al.* 2014, pp. 9, 21, 44–45). The NCA also acknowledges the future scenarios of global SLR range from 8 in to 6.6 ft (0.2–2 m) by the end of the Century, and notes that the relatively large range reflects differences in climate models, natural climate variability, uncertainties regarding melting of glacier and the Antarctic and Greenland ice sheets especially, and future rates of greenhouse gas emissions (Melillo *et al.* 2014, p. 45; Carter *et al.* 2014, p. 414; see also Williams 2013, entire, for a discussion of various influences on SLR). Emerging scientific information reflects further concern about possible acceleration in the rate of ice sheet melting (e.g., Levermann et al., 2013, Moore *et al.* 2013, Menel and Levermann 2014). This includes new modeling which indicates early stage collapse of portions of the West Antarctic Ice sheet has begun, with enough ice to raise global sea level by 1.2 m (3 ft. 11 in) and no known obstacles that would preclude continued further melt, although the time period of melting and effects is somewhat uncertain and is expected to be moderate during this century and generally increase after that, and could span two or more centuries (Joughlin et al 2014, entire; Rignot et al 2014, entire). This information was not available when the IPCC conducted its modeling, and suggests the ''high'' end of the IPCC's projected range of SLR, at about 2 feet, may be too conservative, whereas the higher end (2–4 feet) of the NCA projection of 1–4 ft. for average global SLR by the end of this Century appears reasonable. Current modeling capability does not allow precise projections of SLR at local scales (e.g., see Parris *et al.* 2012, p. 5; Williams 2013, pp. 189–190).

The effects of sea level rise include inundation of coastal habitat and intrusion of saltwater into estuaries and more inland areas including freshwater marshes, which can result in changes in vegetation and in the presence and density of various animal species; these and other changes both now and in the future depend on the magnitude of the SLR and other factors such as storm surges (e.g., SCDNR 2013 p. 52; Williams 2013, pp. 188, 191). Although we expect SLR will continue to occur and even accelerate, the information presented above makes it clear that the magnitude (with most estimates being in the range of 1–4 feet by the end of this century and as described above the lower half of the range appears more plausible) as well as the extent to which SLR will inundate current wood stork habitat is relatively uncertain at this time.

There also is considerable uncertainty about the likely effects of SLR on wood stork habitat, and at this point in time we do not have quantitative predictions of how much nesting habitat or foraging habitat might be affected by such impacts. Based on the best scientific information currently available, the effects appear likely to be mixture of both positive and negative influences on habitat. As noted in our description of habitat for this species (above) and under Factor C (below), wood stork colony sites located in standing water must remain inundated throughout the nesting cycle to protect again predation and nest abandonment. Sea level rise could result in more favorable conditions of inundation throughout the nesting cycle in some areas that currently become seasonally too dry to be suitable. Conversely, additional inundation could make render some currently suitable foraging habitat adjacent to nesting colonies too deep to be suitable as foraging habitat.

The duration of inundation by SLR also will make a difference: As noted earlier, colonies that are perpetually flooded have no tree regeneration and thus SLR could result in loss of some colonies over time at locations where inundation becomes perpetual. At the same time, SLR could result in development of estuaries and suitable habitat for nesting and foraging at sites relatively more inland than currently suitable habitat and thus support range expansion, although human development and climate change adaptation measures aimed at protecting human communities and infrastructure could substantially affect the extent and location of new estuaries that might become established in the face of a changing climate (e.g., Feagin *et al.* 2010 entire; Torio and Chmura 2013 entire).

To summarize, although we acknowledge that SLR is on-going and is certain to continue at global to local levels, likely at an accelerated rate, there is considerable uncertainty as to what the magnitude and rate will be in areas that are part of the wood stork's range, and inland parts of the range may not be effected at all by SLR. Further, although we are concerned about the potential effect of SLR on wood stork habitat, it appears that SLR could result in both positive and negative changes for the wood stork and we cannot determine what the net overall effect will be in the foreseeable future in relation to the threatened destruction, modification, or curtailment of the habitat or range of the DPS.

Habitat Protection, Acquisition, Restoration

While habitat loss, fragmentation, and degradation continue to occur throughout the range of the U.S. population of wood stork, protection, acquisition, and restoration efforts are also in progress. Natural wetlands are being targeted for acquisition to be protected through the management of public lands for wildlife and water conservation (NRCS 2006, p. 1); also see *Recovery Task (1) Protect currently occupied habitat* in the Recovery Plans section. The Wetlands Reserve Program has restored over 200,000 acres of wetlands in Florida and over 115,000 acres in Alabama, Georgia, and South Carolina during the past 18 years. Thousands of acres of wetlands are also being protected on private lands through conservation easements to

assist in habitat and wildlife protection through restoration (Dahl 2006, p. 16). Wetland losses are being avoided, minimized, and mitigated through the regulatory process (Votteler and Muir 2002, pp. 1–2). Recommendations for improved implementation and tracking of wetland mitigation with respect to monitoring and protecting important wood stork habitat are laying the groundwork for improving the regulatory system to better protect wood storks. Large-scale restoration projects like the CERP, Kissimmee River Restoration Project, and St. Johns River Headwaters Restoration Project are significant conservation efforts that greatly benefit wood stork recovery.

Additionally, the species' response to the threat of habitat loss and degradation indicates its ability to seek out new nesting and foraging areas. Since 1980, wood storks have expanded their breeding range north into Georgia, South Carolina, and North Carolina, and the total number of breeding adults is now approaching the delisting criterion set out in the species' recovery plan. Seventy percent of the population now breeds north of Lake Okeechobee and the Everglades (Brooks and Dean 2008, p. 53). These positive indicators throughout the range suggest that the viability of the U.S. wood stork DPS may no longer be as closely tied to the health of the Everglades for reproduction.

With regard to important wood stork habitats, a number of the nesting colonies occur on Federal conservation lands and are consequently afforded protection from development and large-scale habitat disturbance. Wood stork colonies also occur on a variety of State-owned properties, and existing State and Federal regulations provide protection on these sites. However, approximately half of known wood stork colonies occur on private lands. Through conservation partnerships, colonies can be protected through the owners' stewardship. In an effort to minimize potential loss of colony sites, partnerships have been developed through conservation easements, wetland restoration projects, and other conservation means. Also, the wetland areas near nesting colonies play a vital role in the success of a nesting colony. Due to the regulatory status of wetlands, conservation of wetlands shown to be important to wood storks can be largely achieved through the application and improved implementation of existing wetland laws and mitigation practices, such as the Clean Water Act (CWA, 33 U.S.C. 1251 *et seq.*) and the interagency cooperation provisions under section 7 of the Act.

In summary, loss, fragmentation, and modification of wetland habitats continue as threats to wood storks. Changes in local habitat conditions are known to impact wood storks. Based on the best available scientific information, it is our assessment that the species is showing the ability to respond to these threats through expansion of its range, adjusting reproductive timing, and utilizing a variety of wetlands for foraging, roosting, and breeding, including manmade wetlands. Historically, the core of the wood stork breeding population was located in the Everglades and Big Cypress systems of south Florida. Populations there had diminished because of deterioration of the habitat. In recognition of the importance of the Everglades and Big Cypress systems to wood stork recovery, the recovery plan states that, as a prerequisite for full recovery, these ecosystems should once again provide the food resources that are necessary to support traditional wood stork nesting patterns at historical nesting areas. However, current data show that the breeding range has now almost doubled in area and shifted northward along the Atlantic coast as far as southeastern North Carolina. As a result of their range expansion, dependence of wood storks on any specific wetland complex has been reduced. Even though habitat destruction and modification are still a threat to full recovery, the improved wood stork population statistics suggest that wetland habitat is not yet limiting the population, at least at the landscape level (USFWS 2007, p. 16). Habitat loss, fragmentation, and modification of wetland habitats continue around nesting colonies and core foraging areas, and still threaten the viability of the U.S. wood stork DPS. There is also considerable uncertainty about the likely effects of for example SLR on wood storks and their habitat. Based on the best scientific information currently available, the effects appear likely to be mixture of both positive and negative influences on habitat.

B. Overutilization for Commercial, Recreational, Scientific, or Educational Purposes

Monitoring of and research on wood storks over the past 20 years has increased. A few scientific research permits with potential to harm individual wood storks have been issued. This level of take/harm is not expected to adversely impact wood stork recovery or present a threat to the species.

Wading birds and other waterbird species, including wood storks, can impact production at fish farms. A Georgia catfish farmer located approximately 25 miles west of the Chewmill and Birdsville colonies in Jenkins County, Georgia, has documented hundreds of wood storks aggregating and foraging on the littoral edges of the ponds during the late summer in recent years. U.S. Department of Agriculture, Wildlife Services Division (Wildlife Services) has documented hundreds of wood storks, and in one case 1,000 wood storks, roosting on fish pond dikes in the eastern Mississippi, west-central Alabama area (J. Taylor, U.S. Department of Agriculture, pers. comm., 2007). Wildlife Services found that the wood storks were generally loafing, and if they were feeding, they were taking diseased and oxygen-deprived fish and not impacting production. Nonetheless, operators of fish farms often respond to such activities by taking wood storks. Unpermitted wood stork take has been documented at a Mississippi catfish farm and a Florida tropical fish farm. Each of these incidents ended in prosecution for shooting wood storks. However, wood stork take at aquaculture facilities likely still occurs. To what extent this type of take occurs is unknown. Migratory Bird Treaty Act (MBTA; 16 U.S.C. 701 *et seq.*) depredation permits assist in minimizing unauthorized take. Depredation permits are issued to allow the take of migratory birds that are causing serious damage to public or private property, pose a health or safety hazard, or are damaging agricultural crops or wildlife. Wildlife Services provides expert technical advice and information regarding hazing and harassment techniques.

Research permits are issued to eliminate or minimize impacts to wood storks from scientific research. Overutilization was not identified as a threat at the time of listing in 1984, and we conclude that overutilization for commercial, recreational, scientific, or educational purposes is not a threat to the U.S. wood stork DPS now or in the foreseeable future.

C. Disease or Predation

Limited information is available regarding potential impacts from disease or parasites. Hematozoa (blood parasites) have been documented to a limited extent in wood storks in Florida and Georgia (Forrester *et al.* 1977, p. 1273; Fedynich *et al.* 1998, p. 166). Avian malaria has recently been documented in U.S. wood storks, but the available information does not indicate that avian malaria is a significant factor affecting the DPS.

Adequate water levels under nesting trees or surrounding nesting islands deter raccoon predation of wood stork colonies. Water level manipulation or prolonged drought that keeps levels too low can facilitate raccoon predation of wood stork nests. In many cases, colonies also have a population of alligators nearby that deter raccoon predation (Coulter and Bryan 1995, p. 242), and removal of alligators from a nesting colony site could lead to increased raccoon predation. On the other hand, as described above (see Factor A), in some areas sea level rise may result in more favorable water levels that can help deter predation by raccoons. However, human disturbance may cause adults to leave nests, exposing the eggs and downy nestlings to predators (*e.g.,* fish crows), sun, and rain. Great horned owls have been documented nesting in and near colonies and likely impact the colony to some degree.

A breeding population of Burmese pythons has been documented in the Florida Everglades, and a study has documented that pythons preyed upon wood storks (Dove *et al.* 2011, p. 128). Given the observed impact they have had on small mammal populations in south Florida (Dorcas *et al.* 2012, p. 2418), if these snakes or other species of nonnative reptiles become established in additional areas within the south Florida ecosystem, they could pose a significant threat to nesting wood storks and other species of colonial-nesting water birds. Monitoring and research is underway to determine the impacts and effects of Burmese python on wading bird nesting colonies and specifically wood storks and also to alligator populations in the Everglades. At the present time, research does not indicate that predation by pythons occurs at a level that would threaten the U.S. wood stork DPS, now or in the foreseeable future.

A small number of the nonindigenous sacred ibis (*Threskiornis aethiopicus*) were discovered breeding in the Everglades in 2005 and the exponential population growth rates and expanding distribution of this species in France demonstrate the potential for this species to become invasive in Florida (Herring and Gawlik 2008, p. 969). Recent research has documented the sacred ibis as a predator of both eggs and chicks in colonial nesting colonies in their native region (Williams and Ward 2006, p. 321), and they could have a negative impact on wood storks and other colonial nesting birds if a breeding population is established in Florida. Palm Beach County, the Florida Fish and Wildlife Conservation Commission, and Wildlife Services recently teamed up to eradicate invasive sacred ibises where they were known to occur in south Florida, 2007–09. Experts believe that all sacred ibises living in the wild in south Florida have been removed and are cautiously hopeful that the sacred ibis has proven to be a ''success story'' for invasive species management (Johnson and McGarrity 2009, p. 5).

As summarized above, we have a few documented instances of disease and predation within the range of the U.S. wood stork DPS. However, this information does not indicate that disease or predation occur at a level that would threaten the U.S. wood stork DPS, now or in the foreseeable future.

D. The Inadequacy of Existing Regulatory Mechanisms

In addition to the Act, the MBTA provides Federal protection to the U.S. wood stork DPS. Florida, Georgia, South Carolina, North Carolina, Alabama, and Mississippi wildlife laws also list and protect wood storks. These Federal and State laws prohibit the taking of a wood stork, their nests, or their eggs, except as authorized through permitted activities such as scientific research and depredation permits. However, the MBTA and State laws do not prohibit clearing, alteration, or conversion of wetland foraging habitats or nesting colony sites during the non-nesting season.

The CWA regulates dredge and fill activities that would adversely affect wetlands, which constitute wood stork habitat. Section 404 of the CWA regulates the discharge of dredged or fill materials into wetlands. Discharges of dredged or fill materials are commonly associated with projects to create dry land for development sites, water-control projects, and land clearing. The U.S. Army Corps of Engineers (Corps) and the Environmental Protection Agency (EPA) share the responsibility for implementing the permitting program under section 404 of the CWA. These Federal actions must not jeopardize the continued existence of any species protected under the Act.

When impacts to wetlands cannot be avoided or minimized, wetland mitigation is often employed to replace an existing wetland or its functions by creating a new wetland, restoring a former wetland, or enhancing and preserving an existing wetland. This is done to compensate for the authorized destruction of the existing wetland. As discussed earlier, it is not known if wood stork foraging wetlands are being replaced with like-quality foraging wetlands within the core foraging areas of impacted colonies. Lauritsen (2010, pp. 4–5) indicates that the Uniform Mitigation Assessment Method (UMAM, *http://www.dep.state.fl.us/water/wetlands/mitigation/umam/index.htm*) does not accomplish type-for-type wetland mitigation, which can result in considerable losses to wetland functions performed only by shallow short hydroperiod wetlands.

Section 404 of the CWA currently provides little protection for isolated wetland habitats. A 2001 U.S. Supreme Court opinion (*Solid Waste Agency of Northern Cook County* (SWANCC) v. *U.S. Army Corps of Engineers,* 531 U.S. 159 (2001)) substantially reduced the jurisdiction of the Federal Government in regulating isolated wetlands. While many States in the southeastern United States regulate those activities affecting wetlands that are not protected by section 404 of the CWA, Florida is the only State known to regulate isolated wetlands. In South Carolina, Georgia, Alabama, and North Carolina, no State laws protect isolated wetlands. The EPA and the Corps have developed a proposed rule to clarify whether a waterway, water body, or wetland is protected by the CWA and have sent this proposed rule to the Office of Management and Budget for interagency review. The EPA/Corps proposed rule will provide greater consistency, certainty, and predictability nationwide by providing clarity in determining where the CWA applies. The proposed rule is limited to clarifying current uncertainty concerning the jurisdiction of the CWA that has arisen as an outgrowth of Supreme Court decisions. It focuses on clarifying protection of the network of smaller waters that feed into larger ones, to keep downstream water safe from upstream pollutants. It would also clarify protection for wetlands that filter and trap pollution, store water, and help keep communities safe from floods. However, the proposed rule does not propose changes to existing regulatory exemptions and exclusions. For more information see (*http://water.epa.gov/lawsregs/guidance/wetlands/CWAwaters.cfm*).

Within the range of the wood stork in the southeastern U.S., a wide array of activities have begun at Federal, State, County, and local levels which involve analysis and planning for climate change, especially with regard to sea level rise and associated storm surge in coastal areas. These efforts are in the early stages of development and the situation is complicated by uncertainty about the magnitude and rate of climate change and its effects, including the possibility of both positive and negative effects on the wood stork. Thus we do not have a basis at this time for

assessing the possible effectiveness of such that will assist us in addressing climate change in relation to wood stork populations and habitat.

The Service's Wood Stork Habitat Management Guidelines (Ogden 1990) recommend that active colony sites be protected from local hydrologic changes and from human activities (*e.g.,* timber harvesting, vegetation removal, construction, and other habitat-altering activities) that are likely to be detrimental to the colony (USFWS 1997, p. 18). The Service also recommends that feeding sites be protected to the maximum extent possible. The Service's North and South Florida Ecological Services Field Offices have developed ''May Affect'' keys to assist regulators with review of wetland dredge and fill permit applications and in an effort to minimize loss of wetland habitats important to wood stork recovery, like those within the core foraging area of a nesting colony.

In summary, a number of regulatory mechanisms implemented by Federal and State agencies protect wood storks and conserve their habitat. Take of wood storks is illegal under both the Act and MBTA. The CWA minimizes impacts on jurisdictional wetlands that are important to wood storks; however, the CWA alone is not sufficient to eliminate all impacts, as discussed in Factor A. Whether existing habitat protections and conservation mechanisms are inadequate can be assessed only by monitoring the status of the wood stork population. Recent trends indicate that the range is expanding and the breeding population has increased, suggesting that the combination of the CWA, the Act, the MBTA, and State regulations are adequate to protect jurisdictional wetlands to allow population growth. However, non-jurisdictional wetlands continue to be lost to development due to lack of existing regulatory mechanisms, and, therefore, loss of these wetlands continues as a threat to this species.

E. Other Natural or Manmade Factors Affecting Its Continued Existence

Changes in Climate Suitability

One of the concerns related to the effects of climate change is whether the size of the area with climate conditions that are suitable for a species will shrink substantially or change in location relative to the current range of a species, as well as the ability of a species to shift its range in a timely way, if needed. One approach for assessing such possibilities involves climate envelope modeling (CEM), which is a type of species distribution modeling that involves predicting the future locations of climate suitability for a species based on a correlation between its current or past occurrence and climate information, such as the minimum and maximum climate conditions (the ''climate envelope'') where the species occurs (Watling *et al.* 2013, p. 36). The wood stork is one of several species in the southeastern U.S. for which climate modeling has been conducted to make predictions for the 20-year period 2041–2060, and the wood stock is one of the species for which the climate envelope (i.e., area of climate suitability) is predicted to expand (Bucklin *et al.* 2012, entire; Watling *et al.*, 2012, pp. 1–8).

More specifically, the results of Watling *et al.* (2012, p. 6) predict that for 2041–2060 the relative size of the climate envelope for the wood stork will expand to approximately 5.6 times the size of the contemporary climate envelope in the Southeast. (Data for this prediction are available via *http://crocdoc.ifas.ufl.edu/projects/climateenvelopemodeling/* and maps depicting the current and predicted climate envelopes for the wood stock based on these data are in our files.) Also, although a comparison of two different approaches for dealing with climate projections yielded somewhat different predictions of the likely area of climate suitability for 2041–2060, both approaches predicted increases in the size of the area of the climate envelope in the southeast for the woodstork (Bucklin *et al.* 2012, pp. 7–10). The climate envelope information does not mean that the wood stork will change its range to match the changing conditions that were modeled. Nevertheless, the study results, plus the fact that the wood stork is capable of expanding its range (as described in the *Distribution* section, above), lead us to conclude that the potential changes in temperature and precipitation associated with a changing climate over the next several decades, as considered in the models, are not going to be limiting for the southeastern U.S. DPS of the wood stork. It also is significant that a recent assessment which considered the wood stork throughout its entire range (i.e., not limited to the southeast U.S. DPS) concluded that the species has overall low vulnerability to various impacts of climate change (Foden *et al.* 2013, Appendix A).

Contamination Events

Contamination events can be triggered by restoration or natural events, such as hurricanes or flooding, that can expose concentrations of contaminants. For example, from November 1998 through early April 1999, a bird mortality event occurred on the north shore of Lake Apopka, Florida, on former farmlands that had been purchased by the St. Johns River Water Management District and NRCS. An estimated 676 birds died on-site, mostly white pelicans (*Pelecanus erythrorhynchos*) and various species of wading birds, including the wood stork. Of the estimated 1,991 wood storks present in the area, 43 died on-site (Rauschenberger 2007, p. 16). The cause of death was attributed to organochlorine pesticide (OCP) toxicosis (Rauschenberger 2007, p. 16). The birds were exposed to OCPs by eating OCP-contaminated fish, which became easy prey as fish moved from ditches into the flooded fields, located in the eastern part of the restoration area (Rauschenberger 2007, p. 16).

Mercury, heavy metals, and other contaminants that may impair reproduction and cause other health issues are being studied in wood storks and many other wading bird species (Bryan *et al.* 2012; Gallagher *et al.* 2011; Martin 2010; Frederick and Jayasena 2010; Brant *et al.* 2002; Bryan *et al.* 2001; Gariboldi *et al.* 2001). Wetlands in the southeastern United States have many ecosystem attributes ideal for promoting high methylmercury production rates (inorganic mercury converts to methylmercury in the natural environment and fish-eating birds will accumulate this toxin in their systems) (Hall 2008, p. 124) and are probably a threat throughout the range. Frederick and Jayasena (2010, p. 1851) suggest reduced productivity from sublethal effects of mercury in white ibis; it is possible that wood storks could also be impacted but this theory requires further investigation. Also, exposure to contaminants by foraging in manmade wetlands may pose a potential risk to wood stork health and reproduction. On the other hand, pesticide contamination has not generally been considered to adversely affect wood stork reproduction (Bowerman *et al.* 2007, p. 1506; Ohlendorf *et al.* 1978, p. 616).

Oil spills are a concern for the U.S. wood stork DPS; however, very few cases of actual oiled wood storks have been documented. The magnitude of the threat that oil spills play to wood stork recovery and their habitats is unknown and is dependent on the frequency and extent and timing of a spill. Wood stork protection should be specified explicitly in contaminant spill contingency plans which involve State and Federal agencies, along with local oil spill control groups, in efforts to contain and

clean up leaks and spills which could impact wood stork habitat; haze wood storks away from the spill areas and capture and treat individuals that become seriously contaminated.

Algal Blooms (Red Tide Events)

Harmful algal blooms, specifically red tide events, have become more prevalent along Florida's coast. Hallegraeff (2010, p. 1) and Moore *et al.* (2008, p. 220) suggest the likelihood that harmful algal blooms will increase due to climate change. Brevetoxicosis (caused by taking in a brevetoxin produced by *Karenia brevis*) was documented in 2005 as the cause of death of a wood stork (Spalding 2006). Wood storks can be exposed to harmful microalgae and their toxins through a variety of mechanisms, including aerosolized transport (*i.e.,* respiratory irritation in mammals, turtles, birds); bioaccumulation through consumption of prey containing toxins or toxic cells (crustaceans, gastropods, fish, birds, turtles, mammals); and mechanical damage by spines, setae, or other anatomical features of the cells (FWC 2007, p. 1). In addition to dead fish, large numbers of aquatic birds, particularly double-crested cormorants *(Phalacrocorax auritus),* red-breasted mergansers *(Mergus merganser),* and lesser scaup *(Aythya affinis),* were found moribund or dead in red tide areas during the Florida west coast *Karenia brevis* red tide of October 1973 to May 1974 (FWC 2007).

Electrocution

Electrocution mortalities of wood storks from power lines have been documented and reported to us by power companies and by State and Federal wildlife law enforcement. In most cases, when a problem location is identified, it is retrofitted using standard avian protection guidelines to prevent electrocutions. The guidelines recommend using heavily insulated wire, spreading the wires apart to prevent grounding as body parts touch the wires, or burying the wires underground. The Service's Wood Stork Habitat Management Guidelines (Ogden 1990) include recommendations that new transmission lines be at least 1 mile away from colony sites and tall transmission towers no closer than 3 miles from active colonies. The Service also recommends similar guidance for cell phone towers and wind turbines. These recommended distances are provided to help minimize the risk of powerline and tower collisions. The guidelines are intended to protect both adult wood storks making foraging forays to and from the colony to feed chicks and also fledglings that are learning to fly and making foraging forays to and from the colony.

Other Threats

The following is a list of threats that have also been documented to occur, but we have concluded that, due to low incident numbers and minimal documentation, the impacts at this time are very low and do not impede recovery.

Human disturbance is known to have a detrimental effect on wood stork nesting (USFWS 1997, pp. 10, 12). Wood storks have been documented to desert nests when disturbed by humans, thus exposing eggs and young birds to the elements and to predation by gulls and fish crows (Coulter *et al.* 1999, p. 19).

Documentation of road kill mortalities of wood storks has increased (B. Brooks, USFWS, pers. comm., 2010). Many factors may contribute to this, such as better reporting or more storks using roadside ponds, ditches, swales, and flow-ways as foraging habitat.

Hurricanes are an environmental factor that can impact large areas of the 6 state geographic range in the southeast U.S. of the U.S. wood stork DPS both in positive and negative ways depending upon frequency and intensity. According to the National Climate Assessment, there is considerable uncertainty about the details of hurricane activity prior to the 1980s, when data from satellites became available. Since the 1980s, measures of the Atlantic hurricane activity have increased substantially, including the intensity, frequency, duration, and number of strongest (Category 4 and 5) hurricanes. There also is uncertainty about the role of natural variability in these recent changes in hurricane activity, as compared to the role of human-caused changes in climate. As for the future, on average, models project a slight decrease in the annual number of tropical cyclones, but an increase in the number of the strongest (Category 4 and 5) hurricanes over this century. Most of the existing studies also project greater rainfall rates during hurricanes in a warmer climate (Walsh *et al.* 2014, pp. 41–42; 65; Carter *et al.* 2014, p. 399).

Stochastic events, including hurricanes but also severe thunderstorms, do pose other potential risks. Loss of nesting trees due to storm events can have a negative impact on nesting habitat. Severe local storm events have impacted individual colonies, causing chick mortality and even blowing nests out of trees. There are also benefits to wood stork habitat from large rain events associated with hurricanes and other storm systems. Timing of rain events can impact active colonies and local foraging conditions. However, large rain events can also improve hydrologic conditions locally and regionally for current and future nesting seasons. They can also reduce impacts of the nutrient overload to the nesting vegetation and dilute the nutrient load within the wetland from the guano produced by a colony.

As described previously, most wood stork colonies in the southeastern United States have relatively short survival histories and only a handful of colonies have survived more than 20 years. The large numbers of short-lived colonies indicate that colony abandonment and novel colony initiation seems to be typical of the species (Tsai *et al.* 2011, p. 2). The wood stork's ability to seek out new locations for nesting indicates they will continue to respond in a similar fashion to changes in habitat availability that result from changes in habitat suitability associated with hurricanes or other storm events. With regard to foraging, they respond to habitat changes on daily, seasonal, and annual basis, and in drought vs wet years, as well as in the breeding vs non-breeding seasons. This has included responding to major changes that have occurred in the Everglades, where some still nest. They also have expanding their breeding range. Consequently despite past, on-going, and plausible future changes in hurricanes and other severe storms, we anticipate both positive and negative effects depending upon timing, frequency and intensity.

The invasion of exotic plants into natural wetland areas can prevent wood storks from foraging due to high density and canopy cover of the plants (USFWS 2010, p. 127). Invasion into natural nesting habitats by exotic species, including Brazilian pepper (*Schinus terebinthifolius*), melaleuca (*Melaleuca quinquenervia*), and Australian pine (*Casuarina equisetifolia*), may present a problem; however, wood storks are using exotic species for nesting habitat at many manmade wetland colony sites, such as borrow pits. Even though wetlands overgrown with exotics may preclude wood storks from foraging within, they do have a conservation benefit as they flood during the wet season and provide a prey source to adjacent wetlands. Wood storks are also documented utilizing Brazilian pepper as nesting substrate (USFWS 1999, p. 4–396).

Summary of Factor E

In summary, other natural or manmade factors affecting the wood stork's continued existence, such as contaminants, harmful algal blooms, electrocution, road kill, invasion of exotic plants and animals, human disturbance, and stochastic events, are all documented at minimal levels to affect wood storks.

We have no evidence that observed increased temperatures associated with climate change have had an adverse effect on the U.S. wood stork DPS or its habitat. The climate envelope modeling (described above) indicates a substantial increase in the area of suitable temperature conditions and precipitation for the species in the coming decades. Hurricane activity has increased since the 1980s, and although the number of tropical cyclones may decrease in the future, there may be an increase in severe, i.e., class 4 and class 5, hurricanes. The wood stork has evolved under conditions that have included considerable variability habitat distribution and abundance, and conditions that include exposure to hurricanes of varying magnitude. The wood stork utilizes a wide variety of habitats throughout its range in the southeastern United States; this ability to use alternative habitats (as evidenced by the wood storks' expansion from the Everglades of Florida into marshes and tidal areas throughout the southeastern United States (Brooks and Dean 2008, p. 58), helps to buffer this species from some of the impacts to its habitat through natural or manmade threats. We conclude that other natural or manmade factors are not a significant factor affecting the U.S. wood stork DPS, now or in the foreseeable future.

Conclusion

Whether a species is currently on the brink of extinction in the wild depends on the life history and ecology of the species, the nature of the threats, and the species' response to those threats. Loss, fragmentation, and modification of wetland habitats continue as threats to U.S. wood storks. Based on the best available scientific information, our assessment is that the species is showing the ability to respond to these threats through expanding its range, adjusting its reproductive timing, and utilizing a variety of wetlands, including manmade wetlands, to forage, roost, and breed. Current data show that the breeding range has now almost doubled in extent and shifted northward along the Atlantic coast as far as southeastern North Carolina. As a result, dependence of wood storks on any specific wetland complex has been reduced. Even though habitat destruction and modification are still a threat to recovery, the improved wood stork population statistics also suggest that wetland habitat is not yet limiting the population, at least at the landscape level.

A number of regulatory mechanisms are being implemented by Federal and State agencies to protect wood storks and conserve their habitat. Take of wood storks is illegal under both the Act and MBTA. Whether habitat protection and conservation mechanisms are inadequate must be assessed in terms of the wood stork population. Recent trends indicate that the range of the U.S. wood stork DPS is expanding and that the breeding population has increased, suggesting that existing regulatory mechanisms are adequate to allow population growth. However, we remain concerned that the status of this species would be expected to deteriorate should the Act's requirements to consult on all Federal actions affecting the species' habitat or the prohibition on take (including significant habitat modification) be removed. We recognize there are significant recommendations that we can make to help improve implementation of regulatory mechanisms to further minimize impacts to wetland habitats and we intend to work with our partners to work on and address these issues.

Other threats such as overutilization of the species for commercial, recreational, scientific, or educational purposes; disease and predation; and other natural or manmade factors (*e.g.,* contaminants, harmful algal blooms, electrocution, road kill, invasion of exotic plants and animals, human disturbance, and stochastic events) are known to occur but are not significant.

While there continue to be ongoing threats, the U.S. wood stork DPS is increasing and expanding its overall range. Population criteria for reclassification have been exceeded with 3-year population averages higher than 6,000 nesting pairs since 2003 (range of 7,086 to 10,147 nesting pairs). Delisting criteria of 10,000 nesting pairs (5-year average) has not been achieved. The wood stork population has exceeded 10,000 nesting pairs twice during the past 5 years (2006 and 2009), and the 2009 count of 12,720 nesting pairs represents the highest count since the early 1960s. Productivity, though variable, is sufficient to support a growing population. Based on the analysis presented above and the fact that the nesting pair reclassification criteria has been met and exceeded and productivity appears to be supporting a growing population, we have determined the U.S. wood stork DPS is not presently in danger of extinction throughout its range. Because loss, fragmentation, and modification of wetland habitats continue around nesting colonies and core foraging areas, and biological goals of the recovery plan are still applicable, we conclude that the U.S. wood stork DPS is likely to become endangered within the foreseeable future and, therefore, should be reclassified as threatened under the Act.

Significant Portion of the Range Analysis

Having determined that the U.S. wood stork DPS meets the definition of threatened, we must next consider whether there is a significant portion of the range where the wood stork remains in danger of extinction. The phrase ''significant portion of its range'' (SPR) is not defined by the Act, and we have never addressed in our regulations: (1) The outcome of a determination that a species is either endangered or likely to become so throughout a significant portion of its range, but not throughout all of its range; or (2) what qualifies a portion of a range as ''significant.''

Two district court decisions have addressed whether the SPR language allows the Service to list or protect less than all members of a defined ''species'': *Defenders of Wildlife* v. *Salazar,* 729 F. Supp. 2d 1207 (D. Mont. 2010), concerning the Service's delisting of the Northern Rocky Mountain gray wolf (74 FR 15123, April 2, 2009); and *WildEarth Guardians* v. *Salazar,* 2010 U.S. Dist. LEXIS 105253 (D. Ariz. Sept. 30, 2010), concerning the Service's 2008 finding on a petition to list the Gunnison's prairie dog (73 FR 6660, February 5, 2008). The Service had asserted in both of these determinations that it had authority, in effect, to protect only some members of a ''species,'' as defined by the Act (*i.e.,* species, subspecies, or DPS), under the Act. Both courts ruled that the determinations were arbitrary and capricious on the grounds that this approach violated the plain and unambiguous language of the Act. The courts concluded that reading the SPR language to allow protecting only a portion of a species' range is inconsistent with the Act's definition of ''species.'' The courts concluded that, once a determination is made that a species (*i.e.,* species, subspecies, or DPS) meets the definition of ''endangered species'' or ''threatened species,'' it must be placed on the list in its entirety and the Act's protections applied consistently to all members of that species (subject to modification of

protections through special rules under sections 4(d) and 10(j) of the Act).

Consistent with that interpretation, and for the purposes of this rule, we interpret the phrase ''significant portion of its range'' in the Act's definitions of ''endangered species'' and ''threatened species'' to provide an independent basis for listing a species in its entirety; thus there are two situations (or factual bases) under which a species would qualify for listing: A species may be endangered or threatened throughout all of its range; or a species may be endangered or threatened in only a significant portion of its range. If a species is in danger of extinction throughout an SPR, it, the species, is an ''endangered species.'' The same analysis applies to ''threatened species.'' Therefore, the consequence of finding that a species is endangered or threatened in only a significant portion of its range is that the entire species will be listed as endangered or threatened, respectively, and the Act's protections will be applied across the species' entire range.

We conclude, for the purposes of this rule, that interpreting the SPR phrase as providing an independent basis for listing is the best interpretation of the Act because it is consistent with the purposes and the plain meaning of the key definitions of the Act; it does not conflict with established past agency practice (*i.e.,* prior to the 2007 Department of the Interior Solicitor's Opinion), as no consistent, long-term agency practice has been established; and it is consistent with the judicial opinions that have most closely examined this issue. Having concluded that the phrase ''significant portion of its range'' provides an independent basis for listing and protecting the entire species, we next turn to the meaning of ''significant'' to determine the threshold for when such an independent basis for listing exists.

Although there are potentially many ways to determine whether a portion of a species' range is ''significant,'' we conclude, for the purposes of this rule, that the significance of the portion of the range should be determined based on its biological contribution to the conservation of the species. For this reason, we describe the threshold for ''significant'' in terms of an increase in the risk of extinction for the species. We conclude that a biologically based definition of ''significant'' best conforms to the purposes of the Act, is consistent with judicial interpretations, and best ensures species' conservation. Thus, for the purposes of this rule, a portion of the range of a species is ''significant'' if its contribution to the viability of the species is so important that, without that portion, the species would be in danger of extinction.

We evaluate biological significance based on the principles of conservation biology using the concepts of redundancy, resiliency, and representation. *Resiliency* describes the characteristics of a species that allow it to recover from periodic disturbance. *Redundancy* (having multiple populations distributed across the landscape) may be needed to provide a margin of safety for the species to withstand catastrophic events. *Representation* (the range of variation found in a species) ensures that the species' adaptive capabilities are conserved. Redundancy, resiliency, and representation are not independent of each other, and some characteristic of a species or area may contribute to all three. For example, distribution across a wide variety of habitats is an indicator of representation, but it may also indicate a broad geographic distribution contributing to redundancy (decreasing the chance that any one event affects the entire species), and the likelihood that some habitat types are less susceptible to certain threats, contributing to resiliency (the ability of the species to recover from disturbance). None of these concepts is intended to be mutually exclusive, and a portion of a species' range may be determined to be ''significant'' due to its contributions under any one of these concepts.

For the purposes of this rule, we determine if a portion's biological contribution is so important that the portion qualifies as ''significant'' by asking whether, *without that portion,* the representation, redundancy, or resiliency of the species would be so impaired that the species would have an increased vulnerability to threats to the point that the overall species would be in danger of extinction (*i.e.,* would be ''endangered''). Conversely, we would not consider the portion of the range at issue to be ''significant'' if there is sufficient resiliency, redundancy, and representation elsewhere in the species' range that the species would not be in danger of extinction throughout its range if the population in that portion of the range in question became extirpated (extinct locally).

We recognize that this definition of ''significant'' establishes a threshold that is relatively high. On the one hand, given that the outcome of finding a species to be endangered or threatened in an SPR would be listing the species throughout its entire range, it is important to use a threshold for ''significant'' that is robust. It would not be meaningful or appropriate to establish a very low threshold whereby a portion of the range can be considered ''significant'' even if only a negligible increase in extinction risk would result from its loss. Because nearly any portion of a species' range can be said to contribute some increment to a species' viability, use of such a low threshold would require us to impose restrictions and expend conservation resources disproportionately to conservation benefit: Listing would be rangewide, even if only a portion of the range of minor conservation importance to the species is imperiled. On the other hand, it would be inappropriate to establish a threshold for ''significant'' that is too high. This would be the case if the standard were, for example, that a portion of the range can be considered ''significant'' only if threats in that portion result in the entire species' being currently endangered or threatened. Such a high bar would not give the SPR phrase independent meaning, as the Ninth Circuit held in *Defenders of Wildlife* v. *Norton,* 258 F.3d 1136 (9th Cir. 2001).

The definition of ''significant'' used in this rule carefully balances these concerns. By setting a relatively high threshold, we minimize the degree to which restrictions would be imposed or resources expended that do not contribute substantially to species conservation. But we have not set the threshold so high that the phrase ''in a significant portion of its range'' loses independent meaning. Specifically, we have not set the threshold as high as it was under the interpretation presented by the Service in the *Defenders* litigation. Under that interpretation, the portion of the range would have to be so important that current imperilment there would mean that the species would be *currently* imperiled everywhere. Under the definition of ''significant'' used in this rule, the portion of the range need not rise to such an exceptionally high level of biological significance. (We recognize that if the species is imperiled in a portion that rises to that level of biological significance, then we should conclude that the species is in fact imperiled throughout all of its range, and that we would not need to rely on the SPR language for such a listing.) Rather, under this interpretation we ask whether the species would be endangered everywhere without that portion, *i.e.,* if that portion were completely extirpated. In other words, the portion of the range need not be so important that even being in danger of extinction in that portion would be sufficient to cause the remainder of the

range to be endangered; rather, the *complete extirpation* (in a hypothetical future) of the species in that portion would cause the remainder of the range to be endangered.

The range of a species can theoretically be divided into portions in an infinite number of ways. However, there is no purpose to analyzing portions of the range that have no reasonable potential to be significant *and* threatened or endangered. To identify only those portions that warrant further consideration, we determine whether there is substantial information indicating that: (1) The portions may be ''significant,'' and (2) the species may be in danger of extinction there or likely to become so within the foreseeable future. Depending on the biology of the species, its range, and the threats it faces, it might be more efficient for us to address the significance question first or the status question first. Thus, if we determine that a portion of the range is not ''significant,'' we do not need to determine whether the species is endangered or threatened there; if we determine that the species is not endangered or threatened in a portion of its range, we do not need to determine if that portion is ''significant.'' In practice, a key part of the portion status analysis is whether the threats are geographically concentrated in some way. If the threats to the species are essentially uniform throughout its range, no portion is likely to warrant further consideration. Moreover, if any concentration of threats applies only to portions of the species' range that clearly would not meet the biologically based definition of ''significant,'' such portions will not warrant further consideration.

Applying the process described above, we evaluated the U.S. wood stork DPS's range to determine if any areas could be considered a significant portion of its range, and a key portion of that determination is whether the threats are geographically concentrated in some manner. As detailed in the threat analysis in this rule, the primary threat to the wood stork—habitat loss, fragmentation, and modification—is a relatively uniform threat across the species' range.

It could be argued that, at the time of listing, the threat of habitat destruction and fragmentation to the U.S. wood stork DPS at one time was concentrated in south Florida. With the current habitat regimes, nesting wood storks have persisted in south Florida with nesting numbers below historic counts but also varying annually from hundreds to several thousand in many years (Table 2). Even though we note above that no concentration of threats currently occurs in the range of this DPS, we provide here more detail on south Florida to determine whether it is a significant portion of the range in light of the emphasis on south Florida in the wood stork recovery plan.

The wood storks nesting in south Florida (the region south of Lake Okeechobee from Lee County on the west coast to Palm Beach County on the east coast, and the Everglades and Big Cypress systems) now represent approximately 25 percent of the breeding wood storks in the United States during the past 10 years (Tables 1 and 2). Total nesting pairs in this region have been variable, but showed a general pattern of decline during the 1970s and remained low through the mid-1980s. However, wood stork nesting increased in south Florida from the mid-1990s (an average of 400 to 500 pairs) to a high of 5,816 pairs in 2009. A 3-year running average since the time of listing in 1984 ranges from 457 to 3,449 pairs, with considerable variability. These observed fluctuations in the nesting between years and nesting sites have been attributed primarily to variable hydrologic conditions during the nesting season and timing of the nesting season (Crozier and Gawlik 2003, p. 1; Crozier and Cook 2004, pp. 1–2; Frederick 2012, p. 44). Frequent, heavy rains during nesting can cause water levels to increase rapidly. The abrupt increases in water levels during nesting, termed reversals (Crozier and Gawlik 2003, p. 1), may cause late nest initiation, nest abandonment, re-nesting, and poor fledging success.

For example, optimal foraging conditions in 2006 resulted in high nesting success, but the 2-year drought that followed in 2007 and 2008 resulted in no nesting success in the Corkscrew Sanctuary rookery (Lauritsen 2007, p. 11; Lauritsen 2008, p. 12). However, 2009 nesting data for Corkscrew Sanctuary rookeries noted 1,120 nests producing 2,570 nestlings (Lauritsen 2009, p. 13). Similar rebounds in nesting activity were recorded for other south Florida rookeries in 2009, with possibly the largest number of nest starts since 1975, estimated at about 4,000 nests throughout the Everglades and Big Cypress Systems (Newman 2009, p. 51) and a total of 5,816 nesting pairs in south Florida and counts of 2,100 and 1,200 in 2011 and 2012, respectively (Table 2). Frederick (2012, p. 44) states that later nesting increases the risk of mortality of nestlings that have not fledged prior to the onset of the wet season, which is likely the difference between the south Florida segment of the population being a source or a sink to the wood stork population.

The CERP established performance measures and related goals for wood storks and other wading bird species. Metrics include the number of pairs of nesting wood storks and the location of the wood stork colonies. The timing of nesting, which shifted from historical periods of November through December to January through March, is also a metric. These metrics have shown some recent positive measures in Everglades restoration. Restoration models predict that the return of natural flows and hydrologic patterns will result in large, sustainable breeding wading bird populations, with large colonies in the coastal zone of the Everglades and a return to natural timing of nesting, with wood stork nest initiation in November or December. Cook and Kobza (2010, p. 2) suggest that Everglades National Park may be more attractive to nesting birds in recent years and that the 2009 breeding season was the best nesting year in south Florida since the 1940s. The 2009–2010 nesting year did show an improvement in nest timing with wood stork nesting in January, which is earlier than previous years, but still outside the nesting onset target of November to December (Newman 2009, p. 52; Gottlieb 2010, p. 42). Cook and Kobza (2010, p. 2) report a general shift of colony locations to the coast in recent years. Frederick (2012, p. 44) also confirms more wood storks nesting in coastal colonies and an increase in the number of wood storks nesting in the Everglades since 1986; however, there appears to be little improvement on the timing of nesting (Frederick 2012, p. 44).

Although the variability of habitat conditions affects the nesting efforts in south Florida and at times total failure of a colony occurs or little to no nesting, we do not believe such variability will cause extirpation of wood storks in south Florida. Wood storks are a long-lived species that demonstrate considerable variation in population numbers in response to changing hydrological conditions (USFWS 1997, p. 10). We are not aware of any other threat within this portion of the range that would act synergistically and heighten our level of concern for the wood stork population. Consequently, we recognize that it is desirable to improve the nesting success of wood storks in south Florida, and timing of nest initiation appears to be a key factor. However, we conclude that the present level of habitat threat, when combined with the restoration efforts of CERP and the significant number of wood storks nesting in south Florida and throughout

the range, is not of a magnitude that leads us to delineate the wood storks in and around south Florida as being more in danger of extirpation than wood storks breeding in central/north Florida through North Carolina, nor as being a significant portion of the range of the U.S. wood stork DPS.

In summary, the primary threats to the U.S. wood stork DPS (habitat loss, fragmentation, and modification) are relatively uniform throughout the DPS's range.

A growing population with an expanding distribution provides less risk to the species and the breeding range extension makes them less vulnerable to the potential threats. We have determined that none of the existing or potential threats currently place the U.S. wood stork DPS in danger of extinction throughout all or a significant portion of its range. The best available information indicates the U.S. wood stork DPS is likely to become an endangered species within the foreseeable future throughout all of its range due to the impacts of habitat loss, fragmentation, and modification. Thus, the U.S. wood stork DPS meets the definition of a threatened species throughout its range.

Available Conservation Measures

Conservation measures provided to species listed as endangered or threatened under the Act include recognition, recovery actions, requirements for Federal protection, and prohibitions against certain practices. Recognition through listing increases public awareness of threats to the U.S. breeding population of the wood stork, and promotes conservation actions by Federal, State, and local agencies, private organizations, and individuals. The Act provides for possible land acquisition and cooperation with the States, and for recovery planning and implementation. The protection required of Federal agencies and the prohibitions against taking and harm are discussed, in part below.

A number of the nesting colonies of the U.S. wood stork DPS occur on Federal conservation lands and are consequently afforded protection from development and large-scale habitat disturbance. Wood stork colonies also occur on a variety of State-owned properties, and existing State and Federal regulations provide protection on these sites. A significant number of wood stork colonies occur on private lands, and through conservation partnerships, many of these colonies are protected through the owners' stewardship. In many cases, these partnerships have been developed through conservation easements, wetland restoration projects, and other conservation means. The fact that wood stork habitat is primarily wetlands also assures the opportunity for conference or consultation on most projects that occur in wood stork habitat under the authorities described below.

Section 7(a) of the Act, as amended, requires Federal agencies to evaluate their actions with respect to the U.S. breeding population of the wood stork. If a Federal action may affect the wood stork or its habitat, the responsible Federal agency must consult with the Service to ensure that any action authorized, funded, or carried out by such agency is not likely to jeopardize the continued existence of the wood stork. Federal agency actions that may require consultation with us include Corps' involvement in projects such as residential development, mining operations, construction of roads and bridges, or dredging that requires dredge/fill permits. Protecting and restoring wetlands that wood storks are dependent upon through the environmental regulatory review process is the most important action that Federal, State, and local regulatory agencies can undertake and is key to wood stork recovery.

The Act and its implementing regulations set forth a series of general prohibitions and exceptions that apply to all endangered and threatened wildlife. As such, these prohibitions would be applicable to the wood stork. These prohibitions, under 50 CFR 17.21 (17.31 for threatened wildlife species), make it illegal for any person subject to the jurisdiction of the U.S. to ''take'' (including to harass, harm, pursue, hunt, shoot, wound, kill, trap, capture, collect, or to attempt any of these) within the United States or upon the high seas, import or export, deliver, receive, carry, transport, or ship in interstate or foreign commerce in the course of a commercial activity, or to sell or offer for sale in interstate or foreign commerce, any endangered wildlife species. It also is illegal to possess, sell, deliver, carry, transport, or ship any such wildlife that has been taken in violation of the Act. Certain exceptions apply to agents of the Service and State conservation agencies.

We may issue permits to carry out otherwise prohibited activities involving threatened wildlife species under certain circumstances. Regulations governing permits are codified at § 17.32 for threatened species. Such permits are available for scientific purposes, to enhance the propagation or survival of the species and for incidental takes in the course of otherwise lawful activities. For threatened species, permits are also available for zoological exhibition, educational purposes, and special purposes consistent with the purposes of the Act.

Questions regarding whether specific activities will constitute a violation of section 9 of the Act should be directed to the U.S. Fish and Wildlife Service, North Florida Ecological Services Field Office (see **FOR FURTHER INFORMATION CONTACT** section). Requests for copies of the regulations regarding listed species and inquiries about prohibitions and permits may be addressed to the U.S. Fish and Wildlife Service, Ecological Services Division, 1875 Century Boulevard, Suite 200, Atlanta, GA 30345 (telephone 404–679–7313, facsimile 404–679–7081).

Effects of This Rule

This final rule revises 50 CFR 17.11(h) to reclassify the U.S. wood stork DPS from endangered to threatened on the List of Endangered and Threatened Wildlife. This rule formally recognizes that the U.S. wood stork DPS is no longer in danger of extinction throughout all or a significant portion of its range. This reclassification does not significantly change the protections afforded this species under the Act. Based on new information about the range of the U.S. wood stork DPS and where nesting is now occurring, this rule also revises 50 CFR 17.11(h) to reflect that the U.S. wood stork is a DPS and the range of the U.S. wood stork DPS has expanded from Alabama, Florida, Georgia, and South Carolina to also include North Carolina and Mississippi (see *Distinct Vertebrate Population Segment Analysis* section).

The regulatory protections of section 9 and section 7 of the Act will remain in place for the wood stork. Anyone taking, attempting to take, or otherwise possessing a wood stork, or parts thereof, in violation of section 9 of the Act is subject to a penalty under section 11 of the Act. Pursuant to section 7 of the Act, all Federal agencies must ensure that any actions they authorize, fund, or carry out are not likely to jeopardize the continued existence of the U.S. wood stork DPS.

Recovery actions directed at the wood stork will continue to be implemented as outlined in the recovery plan (Service 1997). Highest priority recovery actions include: (1) Locate nesting habitat; (2) locate roosting and foraging habitat; (3) inform landowners; (4) protect (nesting) sites from disturbance; (5) use existing regulatory mechanisms to protect habitat; and (6) monitor nesting and productivity of stork populations.

Finalization of this rule does not constitute an irreversible commitment on our part. Reclassification of the U.S. wood stork DPS from threatened status to endangered status could occur if changes occur in management, population status, or habitat, or if other factors detrimentally affect the DPS or increase threats to the species' survival. Such a reclassification would require another rulemaking.

Required Determinations

Paperwork Reduction Act of 1995

This rule does not contain any new collections of information that require approval by the Office of Management and Budget (OMB) under the Paperwork Reduction Act (44 U.S.C. 3501 *et seq.*). This rule will not impose recordkeeping or reporting requirements on State or local governments, individuals, businesses, or organizations. An agency may not conduct or sponsor, and a person is not required to respond to, a collection of information unless it displays a currently valid OMB control number.

National Environmental Policy Act

We have determined that we do not need to prepare an environmental assessment or environmental impact statement, as defined in the National Environmental Policy Act of 1969 (42 U.S.C 4321 *et seq.*), in connection with regulations adopted pursuant to section 4(a) of the Endangered Species Act. We published a notice outlining our reasons for this determination in the **Federal Register** on October 25, 1983 (48 FR 49244).

Government-to-Government Relationship With Tribes

In accordance with the President's memorandum of April 29, 1994, ''Government-to-Government Relations with Native American Tribal Governments'' (59 FR 22951), Executive Order 13175, and the Department of the Interior Manual Chapter 512 DM 2, we have considered possible effects on and have notified the Native American Tribes within the range of the U.S. breeding population of the wood stork about this rule. They have been advised through a written informational mailing from the Service. If future activities resulting from this rule may affect Tribal resources, a Plan of Cooperation will be developed with the affected Tribe or Tribes.

References Cited

A complete list of references cited is available on the Internet at *http://www.regulations.gov* and upon request from the North Florida Ecological Services Field Office (see **FOR FURTHER INFORMATION CONTACT**).

Authors

The primary authors of this document are the staff members of the North Florida Ecological Services Field Office (see **FOR FURTHER INFORMATION CONTACT**).

List of Subjects in 50 CFR Part 17

Endangered and threatened species, Exports, Imports, Reporting and recordkeeping requirements, Transportation.

Regulation Promulgation

We amend part 17, subchapter B of chapter I, title 50 of the Code of Federal Regulations, as set forth below:

PART 17—[AMENDED]

■ 1. The authority citation for part 17 continues to read as follows:

Authority: 16 U.S.C. 1361–1407; 16 U.S.C. 1531–1544; 16 U.S.C. 4201–4245; unless otherwise noted.

■ 2. Amend § 17.11(h) by revising the entry for ''Stork, wood'' under ''BIRDS'' in the List of Endangered and Threatened Wildlife to read as follows:

§ 17.11 Endangered and threatened wildlife.

* * * * *

(h) * * *

Species		Historic range	Vertebrate population where endangered or threatened	Status	When listed	Critical habitat	Special rules
Common name	Scientific name						
*	*	*	*	*	*		*
BIRDS							
*	*	*	*	*	*		*
Stork, wood	*Mycteria americana.*	U.S.A. (CA, AZ, TX, to Carolinas), Mexico, C. and S. America.	U.S.A. (AL, FL, GA, MS, NC, SC).	T	142, 837	NA	NA
*	*	*	*	*	*		*

* * * * *

Date: May 23, 2014.

Daniel M. Ashe,

Director, U.S. Fish and Wildlife Service.

[FR Doc. 2014–14761 Filed 6–27–14; 8:45 am]

BILLING CODE 4310–55–P

FEDERAL REGISTER

Vol. 79 Monday,

No. 125 June 30, 2014

Part IV

Department of the Treasury

Office of Foreign Assets Control

31 CFR Part 537

Burmese Sanctions Regulations; Final Rule

DEPARTMENT OF THE TREASURY

Office of Foreign Assets Control

31 CFR Part 537

Burmese Sanctions Regulations

AGENCY: Office of Foreign Assets Control, Treasury.

ACTION: Final rule.

SUMMARY: The Department of the Treasury's Office of Foreign Assets Control (OFAC) is amending and reissuing in their entirety the Burmese Sanctions Regulations to implement Executive Order 13448 of October 18, 2007, ''Blocking Property and Prohibiting Certain Transactions Related to Burma,'' Executive Order 13464 of April 30, 2008, ''Blocking Property and Prohibiting Certain Transactions Related to Burma,'' Executive Order 13619 of July 11, 2012, ''Blocking Property of Persons Threatening the Peace, Security, or Stability of Burma,'' and Executive Order 13651 of August 6, 2013, ''Prohibiting Certain Imports of Burmese Jadeite and Rubies.''

DATES: *Effective:* June 30, 2014.

FOR FURTHER INFORMATION CONTACT: Assistant Director for Licensing, tel.: 202–622–2480, Assistant Director for Policy, tel.: 202–622–2746, Assistant Director for Regulatory Affairs, tel.: 202–622–4855, Assistant Director for Sanctions Compliance & Evaluation, tel.: 202–622–2490, Office of Foreign Assets Control, or Chief Counsel (Foreign Assets Control), tel.: 202–622–2410, Office of the General Counsel, Department of the Treasury (not toll free numbers).

SUPPLEMENTARY INFORMATION:

Electronic and Facsimile Availability

This document and additional information concerning OFAC are available from OFAC's Web site (*www.treasury.gov/ofac*). Certain general information pertaining to OFAC's sanctions programs also is available via facsimile through a 24-hour fax-on-demand service, tel.: 202–622–0077.

Background

On May 20, 1997, the President issued Executive Order 13047 (62 FR 28301, May 22, 1997) (E.O. 13047), determining that the Government of Burma, then ruled by a military junta, had committed large-scale repression of the democratic opposition in Burma and declaring a national emergency to deal with the unusual and extraordinary threat posed by the actions and policies of that government. E.O. 13047, issued under the authority of, *inter alia,* section 570 of the Foreign Operations, Export Financing, and Related Programs Appropriations Act, 1997 (Pub. L. 104–208) (section 570), and the International Emergency Economic Powers Act (50 U.S.C. 1701–1706) (IEEPA), prohibits new investment in Burma by a U.S. person and any facilitation by a U.S. person of new investment in Burma by a foreign person. Section 570 provides the President with the authority to waive the new investment prohibition in that section in the national security interests of the United States.

On July 28, 2003, the President signed into law the Burmese Freedom and Democracy Act of 2003 (Pub. L. 108–61) (BFDA) to further sanction the military junta then ruling Burma. The BFDA required the imposition, subject to annual renewal, of a ban on the importation into the United States of any article that is a product of Burma. To implement the BFDA and to take additional steps with respect to the national emergency declared in E.O. 13047, the President issued Executive Order 13310 (68 FR 44853, July 30, 2003) (E.O. 13310), also on July 28, 2003. E.O. 13310 blocks, with certain exceptions, all property and interests in property of the persons listed in its Annex and persons determined by the Secretary of the Treasury, in consultation with the Secretary of State, to meet the criteria set forth in E.O. 13310. E.O. 13310 also prohibits the exportation or reexportation to Burma of financial services from the United States or by a U.S. person, except as exempted, licensed, or authorized. While E.O. 13310 also prohibited the importation into the United States of any article that is a product of Burma, that prohibition has been revoked, as discussed in more detail below.

On October 18, 2007, the President issued Executive Order 13448 (72 FR 60223, October 23, 2007) (E.O. 13448), expanding the scope of the national emergency declared in E.O. 13047 and blocking, with certain exceptions, all property and interests in property of the persons listed in the Annex to E.O. 13448 and persons determined by the Secretary of the Treasury, after consultation with the Secretary of State, to meet the criteria set forth in E.O. 13448.

In order to take additional steps with respect to the national emergency declared in E.O. 13047 and expanded in E.O. 13448, the President issued Executive Order 13464 (73 FR 24491, May 2, 2008) (E.O. 13464) on April 30, 2008. E.O. 13464 blocks all property and interests in property of the persons listed in its Annex and persons determined by the Secretary of the Treasury, after consultation with the Secretary of State, to meet the criteria set forth in E.O. 13464.

On July 29, 2008, the President signed into law the Tom Lantos Block Burmese JADE (Junta's Anti-Democratic Efforts) Act of 2008 (Pub. L. 110–286) (JADE Act), which, among other things, imposes mandatory blocking and financial sanctions on certain categories of persons described in the JADE Act. The JADE Act also amended the BFDA to require a prohibition on the importation into the United States of jadeite or rubies mined or extracted from Burma and articles of jewelry containing such jadeite or rubies and the imposition of certain conditions on the importation into the United States of jadeite or rubies mined or extracted from a country other than Burma and articles of jewelry containing such jadeite or rubies. The importation provisions of the BFDA, as amended by the JADE Act, required annual renewal, which did not occur in 2013.

On July 11, 2012, the President issued Executive Order 13619 (77 FR 41243, July 13, 2012) (E.O. 13619), modifying the scope of the national emergency declared in E.O. 13047 and blocking all property and interests in property of persons determined by the Secretary of the Treasury, in consultation with or at the recommendation of the Secretary of State, to meet the criteria set forth in E.O. 13619.

Also on July 11, 2012, in response to historic reforms in Burma, the U.S. Government took a number of steps to authorize new U.S. investment in Burma and the exportation or reexportation of U.S. financial services to Burma. OFAC issued and made available on its Web site a general license authorizing the exportation or reexportation of financial services to Burma from the United States or by a U.S. person, subject to certain limitations. The Department of State, pursuant to a delegation of authority from the President, waived the ban on new U.S. investment in Burma set forth in section 570. Consistent with this waiver, OFAC issued and made available on its Web site a general license authorizing new investment in Burma, subject to certain limitations and requirements.

The Department of State, pursuant to a delegation of authority from the President, subsequently waived the importation prohibitions set forth in section 3(a) of the BFDA. Consistent with this waiver, on November 16, 2012, OFAC issued and made available on its Web site a general license authorizing the importation into the United States of any article that is a product of Burma,

subject to certain limitations. This general license did not authorize the importation into the United States of jadeite and rubies and of articles of jewelry containing them, which continued to be prohibited.

On February 22, 2013, OFAC issued and made available on its Web site a general license authorizing U.S. persons to conduct most transactions, including opening and maintaining accounts and conducting other financial services involving four of Burma's major financial institutions included on OFAC's Specially Designated Nationals and Blocked Persons List (SDN List): Asia Green Development Bank, Ayeyarwady Bank, Myanma Economic Bank, and Myanma Investment and Commercial Bank.

On August 6, 2013, in light of the expiration of the BFDA importation ban, as amended by the JADE Act, the President issued Executive Order 13651 (78 FR 48793, August 9, 2013) (E.O. 13651) revoking the provisions of E.O. 13310 implementing the broad ban on importation of products of Burma. However, due to continuing concerns, including with respect to labor and human rights in specific sectors, E.O. 13651 reinstates the prohibition that was originally imposed by the JADE Act amendments to the BFDA on the importation into the United States of any jadeite or rubies mined or extracted from Burma and any articles of jewelry containing jadeite or rubies mined or extracted from Burma. Also in E.O. 13651, the President, pursuant to Section 5(i) of the JADE Act, waived the blocking and financial sanctions provisions of Section 5(b) of the JADE Act. Except as authorized by or exempt from the Burmese Sanctions Regulations, 31 CFR part 537 (the ''Regulations''), transactions involving persons whose property and interests in property are blocked pursuant to E.O. 13310, E.O. 13448, E.O. 13464, or E.O. 13619 continue to be prohibited pursuant to the Regulations.

The Regulations, originally issued in 1998 to implement E.O. 13047, were amended and reissued in their entirety in 2005 to implement E.O. 13310. OFAC now is further amending the Regulations to implement E.O. 13448, E.O. 13464, E.O. 13619, and E.O. 13651. Due to the extensive nature of these amendments, OFAC is again reissuing the Regulations in their entirety.

Subpart A of the Regulations clarifies the relation of this part to other laws and regulations. Subpart B of the Regulations implements the prohibitions contained in E.O. 13047, E.O. 13310, E.O. 13448, E.O. 13464, E.O. 13619, and E.O. 13651. Section 537.201(a)(1) blocks, with certain exceptions, all property and interests in property that are in the United States, that come within the United States, or that are or come within the possession or control of any United States person, including any foreign branch, of: (1) Any person listed in the Annexes to E.O. 13310, E.O. 13448, or E.O. 13464; and (2) any person determined by the Secretary of the Treasury, in consultation with the Secretary of State, to meet the criteria set forth in any of those Executive orders. Section 537.201(a)(2) blocks, with certain exceptions, all property and interests in property of any person determined by the Secretary of the Treasury, in consultation with or at the recommendation of the Secretary of State, to meet the criteria set forth in E.O. 13619. Persons listed in the Annexes to E.O. 13310, E.O. 13448, or E.O. 13464, designated by or under the authority of the Secretary of the Treasury pursuant to E.O. 13310, E.O. 13448, E.O. 13464, or E.O. 13619, or otherwise subject to the blocking provisions of these authorities are referred to throughout the Regulations as ''persons whose property and interests in property are blocked pursuant to § 537.201(a).'' The names of persons listed in the Annexes to E.O. 13310, E.O. 13448, or E.O. 13464 or designated pursuant to E.O. 13310, E.O. 13448, E.O. 13464, or E.O. 13619 are published on the SDN List, which is accessible through the following page on OFAC's Web site: *www.treasury.gov/sdn*.

Section 537.202 of subpart B prohibits the exportation or reexportation of financial services to Burma from the United States or by a U.S. person, wherever located. Note, however, that new section 537.529 contains a general license authorizing the exportation or reexportation of financial services to Burma, subject to certain limitations.

Section 537.203 of subpart B prohibits the importation into the United States of any jadeite or rubies mined or extracted from Burma and any articles of jewelry containing jadeite or rubies mined or extracted from Burma.

Section 537.204 of subpart B prohibits new investment in Burma. Note, however, that new section 537.530 contains a general license authorizing new investment in Burma by U.S. persons, subject to certain limitations and requirements.

Section 537.205 of subpart B prohibits any approval, financing, facilitation, or guarantee by a U.S. person, wherever located, of a foreign person's transaction where the transaction would be prohibited by section 537.202 or 537.204 of this part if performed by a U.S. person or within the United States. Section 537.206 prohibits any transaction by a U.S. person or within the United States that evades or avoids, has the purpose of evading or avoiding, causes a violation of, or attempts to violate any of the prohibitions set forth in the Regulations, and any conspiracy formed to violate such prohibitions.

Sections 537.207 and 537.208 of subpart B detail the effect of transfers of blocked property in violation of the Regulations and set forth the requirement to hold blocked funds, such as currency, bank deposits, or liquidated financial obligations, in blocked interest-bearing accounts. Section 537.209 provides that all expenses incident to the maintenance of blocked physical property shall be the responsibility of the owners or operators of such property, and that such expenses shall not be met from blocked funds, unless otherwise authorized. The section further provides that blocked property may, in OFAC's discretion, be sold or liquidated and the net proceeds placed in a blocked interest-bearing account in the name of the owner of the property.

Exemptions from certain prohibitions contained in the Regulations are set forth in section 537.210 of subpart B, including, pursuant to E.O. 13619, a new exemption for the official business of the U.S. Government.

Subpart C defines key terms used throughout the Regulations, and subpart D contains interpretive sections regarding the Regulations. Section 537.416 of subpart D explains that the property and interests in property of an entity are blocked if the entity is 50 percent or more owned by a person whose property and interests in property are blocked, whether or not the name of the entity is incorporated into the SDN List.

Transactions otherwise prohibited under the Regulations but found to be consistent with U.S. policy may be authorized by one of the general licenses contained in subpart E of the Regulations or by a specific license issued pursuant to the procedures described in subpart E of 31 CFR part 501. Subpart E of the Regulations also contains certain statements of specific licensing policy. Several sections in subpart E of the Regulations have been removed and reserved. In some cases activities previously authorized in those sections, including certain importations, are no longer prohibited. In other cases, including certain financial transactions, the current licensing policy is now reflected in new sections 537.529 and 537.531, which authorize the

exportation or reexportation of financial services to Burma and certain transactions involving financial institutions included on the SDN List, respectively. In light of the new general licenses authorizing the exportation or reexportation of financial services to Burma and certain transactions involving financial institutions included on the SDN List, the general license formerly found in section 537.525, which broadly authorized transactions, including with persons whose property or interests in property are blocked pursuant to section 537.201(a), by U.S. citizens permanently residing in Burma, has been removed.

Subpart F of the Regulations refers to subpart C of part 501 for applicable recordkeeping and reporting requirements. Subpart G describes the civil and criminal penalties applicable to violations of the Regulations, as well as the procedures governing the potential imposition of a civil monetary penalty. Subpart G also refers to Appendix A of part 501 for a more complete description of these procedures.

Subpart H of the Regulations refers to subpart E of part 501 for applicable provisions relating to administrative procedures and contains a delegation of authority by the Secretary of the Treasury. Subpart I sets forth a Paperwork Reduction Act notice.

Public Participation

Because the Regulations involve a foreign affairs function, the provisions of Executive Order 12866 and the Administrative Procedure Act (5 U.S.C. 553) requiring notice of proposed rulemaking, opportunity for public participation, and delay in effective date are inapplicable. Because no notice of proposed rulemaking is required for this rule, the Regulatory Flexibility Act (5 U.S.C. 601–612) does not apply.

Paperwork Reduction Act

The collections of information related to the Regulations are contained in 31 CFR part 501 (the ''Reporting, Procedures and Penalties Regulations''). Pursuant to the Paperwork Reduction Act of 1995 (44 U.S.C. 3507), those collections of information have been approved by the Office of Management and Budget under control number 1505–0164. An agency may not conduct or sponsor, and a person is not required to respond to, a collection of information unless the collection of information displays a valid control number.

List of Subjects in 31 CFR Part 537

Administrative practice and procedure, Banks, Banking, Blocking of assets, Burma, Credit, Exportation, Exports, Foreign trade, Importation, Imports, Investments, Jadeite, Loans, New investment, Penalties, Reporting and recordkeeping requirements, Rubies, Securities, Services, Specially Designated Nationals.

For the reasons set forth in the preamble, the Department of the Treasury's Office of Foreign Assets Control revises part 537 of 31 CFR chapter V to read as follows:

PART 537—BURMESE SANCTIONS REGULATIONS

Subpart A—Relation of This Part to Other Laws and Regulations

537.101 Relation of this part to other laws and regulations.

Subpart B—Prohibitions

537.201 Prohibited transactions involving blocked property.
537.202 Prohibited exportation or reexportation of financial services to Burma.
537.203 Prohibited importation of Burmese jadeite and rubies into the United States.
537.204 Prohibited new investment in Burma.
537.205 Prohibited facilitation.
537.206 Evasions; attempts; causing violations; conspiracies.
537.207 Effect of transfers violating the provisions of this part.
537.208 Holding of funds in interest-bearing accounts; investment and reinvestment.
537.209 Expenses of maintaining blocked physical property; liquidation of blocked property.
537.210 Exempt transactions.

Subpart C—General Definitions

537.300 Applicability of definitions.
537.301 Blocked account; blocked property.
537.302 Economic development of resources located in Burma.
537.303 Effective date.
537.304 Entity.
537.305 Exportation or reexportation of financial services to Burma.
537.306 Foreign person.
537.307 Government of Burma.
537.308 Information or informational materials.
537.309 Interest.
537.310 Licenses; general and specific.
537.311 New investment.
537.312 Nongovernmental entity in Burma.
537.313 Person.
537.314 [Reserved]
537.315 Property; property interest.
537.316 Resources located in Burma.
537.317 Transfer.
537.318 United States.
537.319 U.S. depository institution.
537.320 U.S. financial institution.
537.321 United States person; U.S. person.
537.322 U.S. registered broker or dealer in securities.
537.323 U.S. registered money transmitter.
537.324 Jadeite.
537.325 Rubies.
537.326 Articles of jewelry containing jadeite or rubies.
537.327 Financial, material, or technological support.
537.328 OFAC.

Subpart D—Interpretations

537.401 Reference to amended sections.
537.402 Effect of amendment.
537.403 Termination and acquisition of an interest in blocked property.
537.404 Transactions ordinarily incident to a licensed transaction.
537.405 Provision of services.
537.406 Offshore transactions involving blocked property.
537.407 Payments from blocked accounts to satisfy obligations prohibited.
537.408 Setoffs prohibited.
537.409 Activities under pre-May 21, 1997 agreements.
537.410 Contracts and subcontracts regarding economic development of resources in Burma.
537.411 [Reserved]
537.412 Investments in entities involved in economic development projects in Burma.
537.413 [Reserved]
537.414 Charitable contributions.
537.415 Credit extended and cards issued by U.S. financial institutions to a person whose property and interests in property are blocked.
537.416 Entities owned by a person whose property and interests in property are blocked.
537.417 Importation into a bonded warehouse or foreign trade zone.
537.418 Facilitating new investment.

Subpart E—Licenses, Authorizations, and Statements of Licensing Policy

537.501 General and specific licensing procedures.
537.502 Effect of license or authorization.
537.503 Exclusion from licenses.
537.504 Payments and transfers to blocked accounts in U.S. financial institutions.
537.505 Entries in certain accounts for normal service charges authorized.
537.506 Investment and reinvestment of certain funds.
537.507 Provision of certain legal services authorized.
537.508 Authorization of emergency medical services.
537.509 Official activities of certain international organizations authorized.
537.510–537.518 [Reserved]
537.519 Activities undertaken pursuant to certain pre-May 21, 1997 agreements.
537.520–537.521 [Reserved]
537.522 Certain transactions related to patents, trademarks, copyrights, and other intellectual property authorized.
537.523–537.525 [Reserved]
537.526 Transactions necessary and ordinarily incident to publishing authorized.
537.527 [Reserved]
537.528 Payments for legal services from funds originating outside the United States authorized.
537.529 Exportation or reexportation of financial services to Burma authorized.

537.530 New investment in Burma by U.S. persons authorized.
537.531 Certain transactions involving Asia Green Development Bank, Ayeyarwady Bank, Myanma Economic Bank, and Myanma Investment and Commercial Bank authorized.

Subpart F—Reports

537.601 Records and reports.

Subpart G—Penalties

537.701 Penalties.
537.702 Pre-Penalty Notice; settlement.
537.703 Penalty imposition.
537.704 Administrative collection; referral to United States Department of Justice.

Subpart H—Procedures

537.801 Procedures.
537.802 Delegation by the Secretary of the Treasury.

Subpart I—Paperwork Reduction Act

537.901 Paperwork Reduction Act notice.

Authority: 3 U.S.C. 301; 31 U.S.C. 321(b); 50 U.S.C 1601–1651, 1701–1706; Pub. L. 101–410, 104 Stat. 890 (28 U.S.C. 2461 note); Sec. 570, Pub. L. 104–208, 110 Stat. 3009; Pub. L. 110–96, 121 Stat. 1011 (50 U.S.C. 1701 note); Pub. L. 110–286, 122 Stat. 2632 (50 U.S.C. 1701 note); E.O. 13047, 62 FR 28301, 3 CFR, 1997 Comp., p. 202; E.O. 13310, 68 FR 44853, 3 CFR, 2003 Comp., p. 241; E.O. 13448, 72 FR 60223, 3 CFR, 2007 Comp., p. 304; E.O. 13464, 73 FR 24491, 3 CFR, 2008 Comp., p. 189; E.O. 13619, 77 FR 41243, 3 CFR, 2012 Comp., p. 279; E.O. 13651, 78 FR 48793 (August 9, 2013); Determination No. 2009–11, 74 FR 3957, 3 CFR, 2009 Comp., p. 330.

Subpart A—Relation of This Part to Other Laws and Regulations

§ 537.101 Relation of this part to other laws and regulations.

This part is separate from, and independent of, the other parts of this chapter, with the exception of part 501 of this chapter, the recordkeeping and reporting requirements and license application and other procedures of which apply to this part. Actions taken pursuant to part 501 of this chapter with respect to the prohibitions contained in this part are considered actions taken pursuant to this part. Differing foreign policy and national security circumstances may result in differing interpretations of similar language among the parts of this chapter. No license or authorization contained in or issued pursuant to those other parts authorizes any transaction prohibited by this part. No license or authorization contained in or issued pursuant to any other provision of law or regulation authorizes any transaction prohibited by this part. No license or authorization contained in or issued pursuant to this part relieves the involved parties from complying with any other applicable laws or regulations.

Subpart B—Prohibitions

§ 537.201 Prohibited transactions involving blocked property.

(a)(1) All property and interests in property that are in the United States, that come within the United States, or that are or come within the possession or control of any United States person, including any foreign branch, of the following persons are blocked and may not be transferred, paid, exported, withdrawn, or otherwise dealt in:

(i) The persons listed in the Annex to Executive Order 13310 of July 28, 2003 (E.O. 13310), the Annex to Executive Order 13448 of October 18, 2007 (E.O. 13448), or the Annex to Executive Order 13464 of April 30, 2008 (E.O. 13464); and

(ii) Any person determined by the Secretary of the Treasury, in consultation with the Secretary of State:

(A) To be a senior official of the Government of Burma, the State Peace and Development Council of Burma, the Union Solidarity and Development Association of Burma, or any successor entity to any of the foregoing;

(B) To be responsible for, or to have participated in, human rights abuses related to political repression in Burma;

(C) To be engaged, or to have engaged, in activities facilitating public corruption by senior officials of the Government of Burma;

(D) To be a spouse or dependent child of any person whose property and interests in property are blocked pursuant to E.O. 13310 or E.O. 13448;

(E) To be owned or controlled by, directly or indirectly, the Government of Burma or an official or officials of the Government of Burma;

(F) To have materially assisted, sponsored, or provided financial, material, or technological support for, or goods or services in support of, the Government of Burma, the State Peace and Development Council of Burma, the Union Solidarity and Development Association of Burma, any successor entity to any of the foregoing, any senior official of any of the foregoing, or any person whose property and interests in property are blocked pursuant to this paragraph (a)(1); or

(G) To be owned or controlled by, or to have acted or purported to act for or on behalf of, directly or indirectly, any person whose property and interests in property are blocked pursuant to this paragraph (a)(1).

Note to § 537.201(a)(1): The Department of State has determined that the State Peace and Development Council of Burma no longer exists.

(2) All property and interests in property that are in the United States, that come within the United States, or that are or come within the possession or control of any United States person, including any foreign branch, of the following persons are blocked and may not be transferred, paid, exported, withdrawn, or otherwise dealt in: Any person determined by the Secretary of the Treasury, in consultation with or at the recommendation of the Secretary of State:

(i) To have engaged in acts that directly or indirectly threaten the peace, security, or stability of Burma, such as actions that have the purpose or effect of undermining or obstructing the political reform process or the peace process with ethnic minorities in Burma;

(ii) To be responsible for or complicit in, or responsible for ordering, controlling, or otherwise directing, or to have participated in, the commission of human rights abuses in Burma;

(iii) To have, directly or indirectly, imported, exported, reexported, sold, or supplied arms or related materiel from North Korea or the Government of North Korea to Burma or the Government of Burma;

(iv) To be a senior official of an entity that has engaged in the acts described in paragraphs (a)(2)(i) through (iii) of this section;

(v) To have materially assisted, sponsored, or provided financial, material, or technological support for, or goods or services to or in support of, the acts described in paragraphs (a)(2)(i) through (iii) of this section or any person whose property and interests in property are blocked pursuant to this paragraph (a)(2); or

(vi) To be owned or controlled by, or to have acted or purported to act for or on behalf of, directly or indirectly, any person whose property and interests in property are blocked pursuant to this paragraph (a)(2).

Note 1 to paragraph (a) of § 537.201: The names of persons listed in or designated pursuant to E.O. 13310, E.O. 13448, E.O. 13464, or Executive Order 13619 of July 11, 2012, whose property and interests in property are blocked pursuant to paragraph (a) of this section, are published in the **Federal Register** and incorporated into OFAC's Specially Designated Nationals and Blocked Persons List (SDN List) with the identifier ''[BURMA].'' The SDN List is accessible through the following page on OFAC's Web site: *www.treasury.gov/sdn.* Additional information pertaining to the SDN List can be found in Appendix A to this chapter. *See* § 537.416 concerning entities that may not be listed on the SDN List but whose property and interests in property are nevertheless blocked pursuant to paragraph (a) of this section.

Note 2 to paragraph (a) of § 537.201: The International Emergency Economic Powers Act (50 U.S.C. 1701–1706), in section 203 (50 U.S.C. 1702), authorizes the blocking of property and interests in property of a person during the pendency of an investigation. The names of persons whose property and interests in property are blocked pending investigation pursuant to paragraph (a) of this section also are published in the **Federal Register** and incorporated into the SDN List with the identifier ''[BPI–BURMA].''

Note 3 to paragraph (a) of § 537.201: Sections 501.806 and 501.807 of this chapter describe the procedures to be followed by persons seeking, respectively, the unblocking of funds that they believe were blocked due to mistaken identity, or administrative reconsideration of their status as persons whose property and interests in property are blocked pursuant to paragraph (a) of this section.

(b) The prohibitions in paragraph (a) of this section include, but are not limited to, prohibitions on the following transactions:

(1) The making of any contribution or provision of funds, goods, or services by, to, or for the benefit of any person whose property and interests in property are blocked pursuant to paragraph (a) of this section; and

(2) The receipt of any contribution or provision of funds, goods, or services from any person whose property and interests in property are blocked pursuant to paragraph (a) of this section.

(c) Unless authorized by this part or by a specific license expressly referring to this section, any dealing in any security (or evidence thereof) held within the possession or control of a U.S. person and either registered or inscribed in the name of, or known to be held for the benefit of, or issued by, any person whose property and interests in property are blocked pursuant to paragraph (a) of this section is prohibited. This prohibition includes but is not limited to the transfer (including the transfer on the books of any issuer or agent thereof), disposition, transportation, importation, exportation, or withdrawal of, or the endorsement or guaranty of signatures on, any such security on or after the effective date. This prohibition applies irrespective of the fact that at any time (whether prior to, on, or subsequent to the effective date) the registered or inscribed owner of any such security may have or might appear to have assigned, transferred, or otherwise disposed of the security.

(d) The prohibitions in paragraph (a) of this section apply except to the extent transactions are authorized by regulations, orders, directives, rulings, instructions, licenses, or otherwise, and notwithstanding any contract entered into or any license or permit granted prior to the effective date.

Note to § 537.201: Section 5(b) of the Tom Lantos Block Burmese JADE (Junta's Anti-Democratic Efforts) Act of 2008 (Pub. L. 110–286) (JADE Act) imposes blocking and financial sanctions on certain categories of persons described in Section 5(a)(1) of the JADE Act. In Executive Order 13651 of August 6, 2013, the President waived these blocking and financial sanctions pursuant to Section 5(i) of the JADE Act. Except as authorized or exempt, transactions involving persons whose property and interests in property are blocked pursuant to paragraph (a) of this section continue to be prohibited.

§ 537.202 Prohibited exportation or reexportation of financial services to Burma.

Except as otherwise authorized, the exportation or reexportation, directly or indirectly, to Burma of any financial services from the United States or by a U.S. person, wherever located, is prohibited.

Note to § 537.202: *See* § 537.529 for a general license authorizing the exportation or reexportation of financial services to Burma.

§ 537.203 Prohibited importation of Burmese jadeite and rubies into the United States.

(a) Except as provided in paragraphs (b) and (c) of this section or as otherwise authorized, the importation into the United States of any jadeite or rubies mined or extracted from Burma and any articles of jewelry containing jadeite or rubies mined or extracted from Burma is prohibited.

(b) The prohibition in paragraph (a) of this section does not apply to any jadeite or rubies mined or extracted from Burma or any articles of jewelry containing jadeite or rubies mined or extracted from Burma that were previously exported from the United States, including those that accompanied an individual outside the United States for personal use, if they are reimported to the United States by the same person, without having been advanced in value or improved in condition by any process or other means while outside the United States.

(c) Nothing in paragraph (a) of this section shall prohibit transactions to the extent such prohibition would conflict with the international obligations of the United States under the Vienna Convention on Diplomatic Relations, the Vienna Convention on Consular Relations, the United Nations Headquarters Agreement, or other legal instruments providing equivalent privileges and immunities.

Note § 537.203: *See* §§ 537.324, 537.325, and 537.326 for definitions of the terms *jadeite, rubies,* and *articles of jewelry containing jadeite or rubies,* respectively.

§ 537.204 Prohibited new investment in Burma.

Except as otherwise authorized, new investment, as defined in § 537.311, in Burma by U.S. persons is prohibited.

Note to § 537.204: *See* § 537.530 for a general license authorizing new investment in Burma by U.S. persons.

§ 537.205 Prohibited facilitation.

(a) Except as otherwise authorized, U.S. persons, wherever located, are prohibited from approving, financing, facilitating, or guaranteeing a transaction by a person who is a foreign person where the transaction by that foreign person would be prohibited by § 537.202 or § 537.204 of this part if performed by a U.S. person or within the United States.

(b) With respect to new investment in Burma, the prohibition against facilitation does not include the entry into, performance of, or financing of a contract to sell or purchase goods, services, or technology unless such contract includes any of the activities described in § 537.311(a)(2), (3), or (4).

Note to § 537.205: *See* § 537.530 for a general license authorizing new investment in Burma by U.S. persons. *See* § 537.418 for an interpretive provision regarding facilitating new investment in Burma.

§ 537.206 Evasions; attempts; causing violations; conspiracies.

(a) Any transaction by a U.S. person or within the United States on or after the effective date that evades or avoids, has the purpose of evading or avoiding, causes a violation of, or attempts to violate any of the prohibitions set forth in this part is prohibited.

(b) Any conspiracy formed to violate any of the prohibitions set forth in this part is prohibited.

§ 537.207 Effect of transfers violating the provisions of this part.

(a) Any transfer after the effective date that is in violation of any provision of this part or of any regulation, order, directive, ruling, instruction, or license issued pursuant to this part, and that involves any property or interest in property blocked pursuant to § 537.201(a), is null and void and shall not be the basis for the assertion or recognition of any interest in or right, remedy, power, or privilege with respect to such property or property interest.

(b) No transfer before the effective date shall be the basis for the assertion or recognition of any right, remedy, power, or privilege with respect to, or any interest in, any property or interest

in property blocked pursuant to § 537.201(a), unless the person who holds or maintains such property, prior to that date, had written notice of the transfer or by any written evidence had recognized such transfer.

(c) Unless otherwise provided, a license or other authorization issued by OFAC before, during, or after a transfer shall validate such transfer or make it enforceable to the same extent that it would be valid or enforceable but for the provisions of this part and any regulation, order, directive, ruling, instruction, or license issued pursuant to this part.

(d) Transfers of property that otherwise would be null and void or unenforceable by virtue of the provisions of this section shall not be deemed to be null and void or unenforceable as to any person with whom such property is or was held or maintained (and as to such person only) in cases in which such person is able to establish to the satisfaction of OFAC each of the following:

(1) Such transfer did not represent a willful violation of the provisions of this part by the person with whom such property is or was held or maintained (and as to such person only);

(2) The person with whom such property is or was held or maintained did not have reasonable cause to know or suspect, in view of all the facts and circumstances known or available to such person, that such transfer required a license or authorization issued pursuant to this part and was not so licensed or authorized, or, if a license or authorization did purport to cover the transfer, that such license or authorization had been obtained by misrepresentation of a third party or withholding of material facts or was otherwise fraudulently obtained; and

(3) The person with whom such property is or was held or maintained filed with OFAC a report setting forth in full the circumstances relating to such transfer promptly upon discovery that:

(i) Such transfer was in violation of the provisions of this part or any regulation, ruling, instruction, license, or other directive or authorization issued pursuant to this part;

(ii) Such transfer was not licensed or authorized by OFAC; or

(iii) If a license did purport to cover the transfer, such license had been obtained by misrepresentation of a third party or withholding of material facts or was otherwise fraudulently obtained.

Note to § 537.207(d): The filing of a report in accordance with the provisions of paragraph (d)(3) of this section shall not be deemed evidence that the terms of paragraphs (d)(1) and (2) of this section have been satisfied.

(e) Unless licensed pursuant to this part, any attachment, judgment, decree, lien, execution, garnishment, or other judicial process is null and void with respect to any property and interests in property blocked pursuant to § 537.201(a).

§ 537.208 Holding of funds in interest-bearing accounts; investment and reinvestment.

(a) Except as provided in paragraph (e) or (f) of this section, or as otherwise directed by OFAC, any U.S. person holding funds, such as currency, bank deposits, or liquidated financial obligations, subject to § 537.201(a) shall hold or place such funds in a blocked interest-bearing account located in the United States.

(b)(1) For purposes of this section, the term *blocked interest-bearing account* means a blocked account:

(i) In a federally-insured U.S. bank, thrift institution, or credit union, provided the funds are earning interest at rates that are commercially reasonable; or

(ii) With a broker or dealer registered with the Securities and Exchange Commission under the Securities Exchange Act of 1934 (15 U.S.C. 78a *et seq.*), provided the funds are invested in a money market fund or in U.S. Treasury bills.

(2) Funds held or placed in a blocked account pursuant to paragraph (a) of this section may not be invested in instruments the maturity of which exceeds 180 days.

(c) For purposes of this section, a rate is commercially reasonable if it is the rate currently offered to other depositors on deposits or instruments of comparable size and maturity.

(d) For purposes of this section, if interest is credited to a separate blocked account or subaccount, the name of the account party on each account must be the same.

(e) Blocked funds held in instruments the maturity of which exceeds 180 days at the time the funds become subject to § 537.201(a) may continue to be held until maturity in the original instrument, provided any interest, earnings, or other proceeds derived therefrom are paid into a blocked interest-bearing account in accordance with paragraph (a) or (f) of this section.

(f) Blocked funds held in accounts or instruments outside the United States at the time the funds become subject to § 537.201(a) may continue to be held in the same type of accounts or instruments, provided the funds earn interest at rates that are commercially reasonable.

(g) This section does not create an affirmative obligation for the holder of blocked tangible property, such as chattels or real estate, or of other blocked property, such as debt or equity securities, to sell or liquidate such property. However, OFAC may issue licenses permitting or directing such sales or liquidation in appropriate cases.

(h) Funds subject to this section may not be held, invested, or reinvested in a manner that provides immediate financial or economic benefit or access to any person whose property and interests in property are blocked pursuant to § 537.201(a), nor may their holder cooperate in or facilitate the pledging or other attempted use as collateral of blocked funds or other assets.

§ 537.209 Expenses of maintaining blocked physical property; liquidation of blocked property.

(a) Except as otherwise authorized, and notwithstanding the existence of any rights or obligations conferred or imposed by any international agreement or contract entered into or any license or permit granted prior to the effective date, all expenses incident to the maintenance of physical property blocked pursuant to § 537.201(a) shall be the responsibility of the owners or operators of such property, which expenses shall not be met from blocked funds.

(b) Property blocked pursuant to § 537.201(a) may, in the discretion of OFAC, be sold or liquidated and the net proceeds placed in a blocked interest-bearing account in the name of the owner of the property.

§ 537.210 Exempt transactions.

(a) *Personal communications.* The prohibitions contained in this part do not apply to any postal, telegraphic, telephonic, or other personal communication that does not involve the transfer of anything of value.

(b) *Information or informational materials.* (1) The prohibitions contained in this part do not apply to the importation from any country and the exportation to any country of any information or informational materials, as defined in § 537.308, whether commercial or otherwise, regardless of format or medium of transmission.

(2) This section does not exempt from regulation or authorize transactions related to information or informational materials not fully created and in existence at the date of the transactions, or to the substantive or artistic alteration or enhancement of informational

materials, or to the provision of marketing and business consulting services. Such prohibited transactions include, but are not limited to, payment of advances for information or informational materials not yet created and completed (with the exception of prepaid subscriptions for widely circulated magazines and other periodical publications); provision of services to market, produce or co-produce, create, or assist in the creation of information or informational materials; and payment of royalties with respect to income received for enhancements or alterations made by U.S. persons to such information or informational materials.

(3) This section does not exempt or authorize transactions incident to the exportation of software subject to the Export Administration Regulations, 15 CFR parts 730–774, or to the exportation of goods (including software) or technology for use in the transmission of any data, or to the provision, sale, or leasing of capacity on telecommunications transmission facilities (such as satellite or terrestrial network connectivity) for use in the transmission of any data. The exportation of such items or services and the provision, sale, or leasing of such capacity or facilities to a person whose property and interests in property are blocked pursuant to § 537.201(a) are prohibited.

(c) *Travel.* The prohibitions contained in this part do not apply to transactions ordinarily incident to travel to or from any country, including importation or exportation of accompanied baggage for personal use, maintenance within any country including payment of living expenses and acquisition of goods or services for personal use, and arrangement or facilitation of such travel, including nonscheduled air, sea, or land voyages.

(d) *Pre-1997 contracts.* Except as prohibited by § 537.201(a) with respect to persons whose property and interests in property are blocked pursuant to Executive Order 13448 of October 18, 2007, Executive Order 13464 of April 30, 2008, or Executive Order 13619 of July 11, 2012, or by § 537.203, the prohibitions contained in this part do not apply to any activity undertaken pursuant to an agreement, or pursuant to the exercise of rights under such an agreement, that was entered into by a U.S. person with the Government of Burma or a non-governmental entity in Burma prior to 12:01 a.m. eastern daylight time on May 21, 1997.

(e) *Official business.* The prohibitions contained in this part, other than that in § 537.203, do not apply to transactions for the conduct of the official business of the United States Government by employees, grantees, or contractors thereof.

Note to § 537.210(e): Section 537.210(e) does not apply to the extent that engaging in such transactions would require the issuance of a statutory waiver and such a waiver is not issued. As of June 30, 2014, the statutory waivers required to authorize otherwise prohibited transactions have been issued. Specifically, the Department of State, pursuant to a delegation of authority from the President, waived the ban on new U.S. investment in Burma set forth in the Foreign Operations, Export Financing, and Related Programs Appropriations Act, 1997, and in § 537.204 of this part. In addition, in Executive Order 13651 of August 6, 2013, the President waived pursuant to Section 5(i) of the Tom Lantos Block Burmese JADE (Junta's Anti-Democratic Efforts) Act of 2008 (Pub. L. 110–286) (JADE Act) the blocking and financial sanctions provisions of Section 5(b) of the JADE Act.

Subpart C—General Definitions

§ 537.300 Applicability of definitions.

The definitions in this subpart apply throughout the entire part.

§ 537.301 Blocked account; blocked property.

The terms *blocked account* and *blocked property* shall mean any account or property subject to the prohibitions in § 537.201 held in the name of a person whose property and interests in property are blocked pursuant to § 537.201(a), or in which such person has an interest, and with respect to which payments, transfers, exportations, withdrawals, or other dealings may not be made or effected except pursuant to a license or other authorization from OFAC expressly authorizing such action.

Note to § 537.301: *See* § 537.416 concerning the blocked status of property and interests in property of an entity that is 50 percent or more owned by a person whose property and interests in property are blocked pursuant to § 537.201(a).

§ 537.302 Economic development of resources located in Burma.

(a) The term *economic development of resources located in Burma* means activities pursuant to a contract the subject of which includes responsibility for the development or exploitation of resources located in Burma, including making or attempting to make those resources accessible or available for exploitation or economic use. The term shall not be construed to include not-for-profit educational, health, or other humanitarian programs or activities.

(b) *Examples:* The economic development of resources located in Burma includes a contract conferring rights to explore for, develop, extract, or refine petroleum, natural gas, or minerals in the ground in Burma; or a contract to assume control of a mining operation in Burma, acquire a forest or agricultural area for commercial use of the timber or other crops, or acquire land for the construction and operation of a hotel or factory.

Note to § 537.302: *See* § 537.316 for a definition of the term *resources located in Burma.*

§ 537.303 Effective date.

The term *effective date* refers to the effective date of the applicable prohibitions and directives contained in this part as follows:

(a) With respect to a person whose property and interests in property are blocked pursuant to § 537.201(a)(1)(i), 12:01 a.m. eastern daylight time, July 29, 2003, for persons listed in the Annex to Executive Order 13310 of July 28, 2003; 12:01 a.m. eastern daylight time, October 19, 2007, for persons listed in the Annex to Executive Order 13448 of October 18, 2007; and 12:01 a.m. eastern daylight time, May 1, 2008, for persons listed in the Annex to Executive Order 13464 of April 30, 2008;

(b) With respect to a person whose property and interests in property are otherwise blocked pursuant to § 537.201(a), the earlier of the date of actual or constructive notice that such person's property and interests in property are blocked;

(c) With respect to the exportation or reexportation of financial services to Burma prohibited by § 537.202, or with respect to facilitation thereof prohibited by § 537.205, 12:01 a.m. eastern daylight time, July 29, 2003;

(d) With respect to the importation into the United States of any jadeite or rubies mined or extracted from Burma and any articles of jewelry containing jadeite or rubies mined or extracted from Burma prohibited by § 537.203, 12:01 a.m. eastern daylight time, August 7, 2013;

(e) With respect to new investment prohibited by § 537.204, or with respect to facilitation thereof prohibited by § 537.205, 12:01 a.m. eastern daylight time, May 21, 1997.

§ 537.304 Entity.

The term *entity* means a partnership, association, trust, joint venture, corporation, group, subgroup, or other organization.

§ 537.305 Exportation or reexportation of financial services to Burma.

The term *exportation or reexportation of financial services to Burma* means:

(a) The transfer of funds, directly or indirectly, from the United States or by a U.S. person, wherever located, to Burma; or

(b) The provision, directly or indirectly, to persons in Burma of insurance services, investment or brokerage services (including but not limited to brokering or trading services regarding securities, debt, commodities, options, or foreign exchange), banking services, or money remittance services; loans, guarantees, letters of credit, or other extensions of credit; or the service of selling or redeeming traveler's checks, money orders, or stored value.

§ 537.306 Foreign person.

The term *foreign person* means any person that is not a U.S. person.

§ 537.307 Government of Burma.

The term *Government of Burma* means the Government of Burma (also known as Myanmar), its agencies, instrumentalities, and controlled entities, and the Central Bank of Burma.

§ 537.308 Information or informational materials.

(a) The term *information or informational materials* includes, but is not limited to, publications, films, posters, phonograph records, photographs, microfilms, microfiche, tapes, compact disks, CD ROMs, artworks, and news wire feeds.

Note to § 537.308(a): To be considered *information or informational materials,* artworks must be classified under heading 9701, 9702, or 9703 of the Harmonized Tariff Schedule of the United States.

(b) The term *information or informational materials,* with respect to exports, does not include items:

(1) That were, as of April 30, 1994, or that thereafter become, controlled for export pursuant to section 5 of the Export Administration Act of 1979, 50 U.S.C. App. 2401–2420 (1979) (the ''EAA''), or section 6 of the EAA to the extent that such controls promote the nonproliferation or antiterrorism policies of the United States; or

(2) With respect to which acts are prohibited by 18 U.S.C. chapter 37.

§ 537.309 Interest.

Except as otherwise provided in this part, the term *interest,* when used with respect to property (*e.g.,* ''an interest in property''), means an interest of any nature whatsoever, direct or indirect.

§ 537.310 Licenses; general and specific.

(a) Except as otherwise provided in this part, the term *license* means any license or authorization contained in or issued pursuant to this part.

(b) The term *general license* means any license or authorization the terms of which are set forth in subpart E of this part or are made available on OFAC's Web site: *www.treasury.gov/ofac.*

(c) The term *specific license* means any license or authorization issued pursuant to this part, but not set forth in subpart E of this part or made available on OFAC's Web site.

Note to § 537.310: *See* § 501.801 of this chapter on licensing procedures.

§ 537.311 New investment.

(a) The term *new investment* means any of the following activities if such activity is undertaken pursuant to an agreement, or pursuant to the exercise of rights under such an agreement, that is entered into with the Government of Burma or a nongovernmental entity in Burma on or after May 21, 1997:

(1) The entry into a contract that includes the economic development of resources located in Burma, as defined in § 537.302;

(2) The entry into a contract providing for the general supervision and guarantee of another person's performance of a contract that includes the economic development of resources located in Burma;

(3) The purchase of a share of ownership, including an equity interest, in the economic development of resources located in Burma; or

(4) The entry into a contract providing for the participation in royalties, earnings, or profits in the economic development of resources located in Burma, without regard to the form of the participation.

(b) The term *new investment* shall not include the entry into, performance of, or financing of a contract to sell or purchase goods, services, or technology unless such contract includes any of the activities described in paragraphs (a)(2) through (4) of this section.

§ 537.312 Nongovernmental entity in Burma.

The term *nongovernmental entity in Burma* means a partnership, association, trust, joint venture, corporation, or other organization, wherever organized, that is located in Burma or exists for the exclusive or predominant purpose of engaging in the economic development of resources located in Burma or derives its income predominantly from such economic development, and is not the Government of Burma.

§ 537.313 Person.

The term *person* means an individual or entity.

§ 537.314 [Reserved]

§ 537.315 Property; property interest.

The terms *property* and *property interest* include, but are not limited to, money, checks, drafts, bullion, bank deposits, savings accounts, debts, indebtedness, obligations, notes, guarantees, debentures, stocks, bonds, coupons, any other financial instruments, bankers acceptances, mortgages, pledges, liens or other rights in the nature of security, warehouse receipts, bills of lading, trust receipts, bills of sale, any other evidences of title, ownership or indebtedness, letters of credit and any documents relating to any rights or obligations thereunder, powers of attorney, goods, wares, merchandise, chattels, stocks on hand, ships, goods on ships, real estate mortgages, deeds of trust, vendors' sales agreements, land contracts, leaseholds, ground rents, real estate and any other interest therein, options, negotiable instruments, trade acceptances, royalties, book accounts, accounts payable, judgments, patents, trademarks or copyrights, insurance policies, safe deposit boxes and their contents, annuities, pooling agreements, services of any nature whatsoever, contracts of any nature whatsoever, and any other property, real, personal, or mixed, tangible or intangible, or interest or interests therein, present, future, or contingent.

§ 537.316 Resources located in Burma.

The term *resources located in Burma* means any resources, including natural, agricultural, commercial, financial, industrial, and human resources, located within the territory of Burma, including the territorial sea, or located within the exclusive economic zone or continental shelf of Burma.

§ 537.317 Transfer.

The term *transfer* means any actual or purported act or transaction, whether or not evidenced by writing, and whether or not done or performed within the United States, the purpose, intent, or effect of which is to create, surrender, release, convey, transfer, or alter, directly or indirectly, any right, remedy, power, privilege, or interest with respect to any property. Without limitation on the foregoing, it shall include the making, execution, or delivery of any assignment, power, conveyance, check, declaration, deed, deed of trust, power of attorney, power of appointment, bill of sale, mortgage, receipt, agreement, contract, certificate, gift, sale, affidavit, or statement; the making of any payment; the setting off of any obligation or credit; the appointment of

any agent, trustee, or fiduciary; the creation or transfer of any lien; the issuance, docketing, filing, or levy of or under any judgment, decree, attachment, injunction, execution, or other judicial or administrative process or order, or the service of any garnishment; the acquisition of any interest of any nature whatsoever by reason of a judgment or decree of any foreign country; the fulfillment of any condition; the exercise of any power of appointment, power of attorney, or other power; or the acquisition, disposition, transportation, importation, exportation, or withdrawal of any security.

§ 537.318 United States.

The term *United States* means the United States, its territories and possessions, and all areas under the jurisdiction or authority thereof.

§ 537.319 U.S. depository institution.

The term *U.S. depository institution* means any entity (including its foreign branches) organized under the laws of the United States or any jurisdiction within the United States, or any agency, office, or branch located in the United States of a foreign entity, that is engaged primarily in the business of banking (for example, banks, savings banks, savings associations, credit unions, trust companies, and United States bank holding companies) and is subject to regulation by federal or state banking authorities.

§ 537.320 U.S. financial institution.

The term *U.S. financial institution* means any U.S. entity (including its foreign branches) that is engaged in the business of accepting deposits, making, granting, transferring, holding, or brokering a loan or other extension of credit, or purchasing or selling foreign exchange, securities, commodity futures or options, or procuring purchasers and sellers thereof, as principal or agent. It includes but is not limited to depository institutions, banks, savings banks, trust companies, securities brokers and dealers, commodity futures and options brokers and dealers, forward contract and foreign exchange merchants, securities and commodities exchanges, clearing corporations, investment companies, employee benefit plans, and U.S. holding companies, U.S. affiliates, or U.S. subsidiaries of any of the foregoing. This term includes those branches, offices, and agencies of foreign financial institutions that are located in the United States, but not such institutions' foreign branches, offices, or agencies.

§ 537.321 United States person; U.S. person.

The term *United States person* or *U.S. person* means any United States citizen, permanent resident alien, entity organized under the laws of the United States or any jurisdiction within the United States (including foreign branches), or any person in the United States.

§ 537.322 U.S. registered broker or dealer in securities.

The term *U.S. registered broker or dealer in securities* means any U.S. citizen, permanent resident alien, or entity organized under the laws of the United States or of any jurisdiction within the United States (including its foreign branches), or any agency, office, or branch of a foreign entity located in the United States, that:

(a) Is a ''broker'' or ''dealer'' in securities within the meanings set forth in the Securities Exchange Act of 1934;

(b) Holds or clears customer accounts; and

(c) Is registered with the Securities and Exchange Commission under the Securities Exchange Act of 1934.

§ 537.323 U.S. registered money transmitter.

The term *U.S. registered money transmitter* means any U.S. citizen, permanent resident alien, or entity organized under the laws of the United States or of any jurisdiction within the United States (including its foreign branches), or any agency, office, or branch of a foreign entity located in the United States, that is a money transmitter, as defined in 31 CFR 1010.100(ff)(5), and that is registered pursuant to 31 CFR 1022.380.

§ 537.324 Jadeite.

The term *jadeite* means any jadeite classifiable under heading 7103 of the Harmonized Tariff Schedule of the United States.

§ 537.325 Rubies.

The term *rubies* means any rubies classifiable under heading 7103 of the Harmonized Tariff Schedule of the United States.

§ 537.326 Articles of jewelry containing jadeite or rubies.

The term *articles of jewelry containing jadeite or rubies* means any article of jewelry classifiable under heading 7113 of the Harmonized Tariff Schedule of the United States that contains jadeite or rubies, or any article of jadeite or rubies classifiable under heading 7116 of the Harmonized Tariff Schedule of the United States.

§ 537.327 Financial, material, or technological support.

The term *financial, material, or technological support,* as used in § 537.201(a) of this part, means any property, tangible or intangible, including but not limited to currency, financial instruments, securities, or any other transmission of value; weapons or related materiel; chemical or biological agents; explosives; false documentation or identification; communications equipment; computers; electronic or other devices or equipment; technologies; lodging; safe houses; facilities; vehicles or other means of transportation; or goods. ''Technologies'' as used in this definition means specific information necessary for the development, production, or use of a product, including related technical data such as blueprints, plans, diagrams, models, formulae, tables, engineering designs and specifications, manuals, or other recorded instructions.

§ 537.328 OFAC.

The term *OFAC* means the Department of the Treasury's Office of Foreign Assets Control.

Subpart D—Interpretations

§ 537.401 Reference to amended sections.

Except as otherwise specified, reference to any provision in or appendix to this part or chapter or to any regulation, ruling, order, instruction, directive, or license issued pursuant to this part refers to the same as currently amended.

§ 537.402 Effect of amendment.

Unless otherwise specifically provided, any amendment, modification, or revocation of any provision in or appendix to this part or chapter or of any order, regulation, ruling, instruction, or license issued by OFAC does not affect any act done or omitted, or any civil or criminal proceeding commenced or pending, prior to such amendment, modification, or revocation. All penalties, forfeitures, and liabilities under any such order, regulation, ruling, instruction, or license continue and may be enforced as if such amendment, modification, or revocation had not been made.

§ 537.403 Termination and acquisition of an interest in blocked property.

(a) Whenever a transaction licensed or authorized by or pursuant to this part results in the transfer of property (including any property interest) away from a person whose property and interests in property are blocked pursuant to § 537.201(a), such property

shall no longer be deemed to be property blocked pursuant to § 537.201(a), unless there exists in the property another interest that is blocked pursuant to § 537.201(a), the transfer of which has not been effected pursuant to license or other authorization.

(b) Unless otherwise specifically provided in a license or authorization issued pursuant to this part, if property (including any property interest) is transferred or attempted to be transferred to a person whose property and interests in property are blocked pursuant to § 537.201(a), such property shall be deemed to be property in which such a person has an interest and therefore blocked.

§ 537.404 Transactions ordinarily incident to a licensed transaction.

(a) Any transaction ordinarily incident to a licensed transaction and necessary to give effect thereto is also authorized, except:

(1) An ordinarily incident transaction, not explicitly authorized within the terms of the license, by or with a person whose property and interests in property are blocked pursuant to § 537.201(a), except as provided in paragraph (b) of this section; or

(2) An ordinarily incident transaction, not explicitly authorized within the terms of the license, involving a debit to a blocked account or a transfer of blocked property.

(b) Transactions licensed pursuant to subpart E of this part and those transactions falling within the scope of paragraph (a) of this section are authorized even though they may involve transfers to or from an account of a financial institution whose property and interests in property are blocked pursuant to § 537.201(a), provided that the account is not on the books of a financial institution that is a U.S. person, unless otherwise authorized.

Note to § 537.404(b): *See* § 537.531 for a general license authorizing transactions involving certain Burmese financial institutions whose property and interests in property are blocked pursuant to § 537.201(a), including establishing and maintaining accounts on the books of U.S. financial institutions.

(c) *Example:* A license authorizing a person to complete a securities sale involving Company A, whose property and interests in property are blocked pursuant to § 537.201(a), also authorizes other persons to engage in activities that are ordinarily incident and necessary to complete the sale, including transactions by the buyer, broker, transfer agents, and banks, provided that, except as provided in paragraph (b) of this section, such other persons are not themselves persons whose property and interests in property are blocked pursuant to § 537.201(a).

§ 537.405 Provision of services.

(a) The prohibitions on transactions contained in § 537.201 apply to services performed in the United States or by U.S. persons, wherever located, including by a foreign branch of an entity located in the United States:

(1) On behalf of or for the benefit of a person whose property and interests in property are blocked pursuant to § 537.201(a); or

(2) With respect to property interests of any person whose property and interests in property are blocked pursuant to § 537.201(a).

(b) *Example:* U.S. persons may not, except as authorized by or pursuant to this part, provide legal, accounting, financial, brokering, freight forwarding, transportation, public relations, or other services to a person whose property and interests in property are blocked pursuant to § 537.201(a).

Note to § 537.405: *See* §§ 537.507 and 537.508 on licensing policy with regard to the provision of certain legal and emergency medical services.

§ 537.406 Offshore transactions involving blocked property.

The prohibitions in § 537.201 on transactions or dealings involving blocked property apply to transactions by any U.S. person in a location outside the United States with respect to property held in the name of a person whose property and interests in property are blocked pursuant to § 537.201(a).

§ 537.407 Payments from blocked accounts to satisfy obligations prohibited.

Pursuant to § 537.201, no debits may be made to a blocked account to pay obligations to U.S. persons or other persons, except as authorized by or pursuant to this part.

Note to § 537.407: *See also* § 537.502(e), which provides that no license or other authorization contained in or issued pursuant to this part authorizes transfers of or payments from blocked property or debits to blocked accounts unless the license or other authorization explicitly authorizes the transfer of or payment from blocked property or the debit to a blocked account.

§ 537.408 Setoffs prohibited.

A setoff against blocked property (including a blocked account), whether by a U.S. bank or other U.S. person, is a prohibited transfer under § 537.201 if effected after the effective date.

§ 537.409 Activities under pre-May 21, 1997 agreements.

Pursuant to § 537.210(d), a U.S. person who is a party to a pre-May 21, 1997 agreement may enter into subsequent agreements where such agreements are pursuant to, or in exercise of rights under, the pre-May 21, 1997 agreement and are specifically contemplated by the pre-May 21, 1997 agreement, unless such subsequent agreements involve any activity prohibited by § 537.201(a) with respect to any person whose property and interests in property are blocked pursuant to Executive Order 13448 of October 18, 2007 (E.O. 13448), Executive Order 13464 of April 30, 2008 (E.O. 13464), or Executive Order 13619 of July 11, 2012 (E.O. 13619), or by § 537.203. The exercise of rights under a pre-May 21, 1997 agreement may include the exercise of options to extend the contract, depending on such factors as the degree of specificity with which the option to extend is described in the pre-May 21, 1997 agreement and the degree to which the party wishing to renew can enforce its decision to exercise the option, unless such exercise of rights involves any activity prohibited by § 537.201(a) with respect to any person whose property and interests in property are blocked pursuant to E.O. 13448, E.O. 13464, or E.O. 13619, or by § 537.203.

§ 537.410 Contracts and subcontracts regarding economic development of resources in Burma.

Section 537.204 prohibits new investment in Burma by U.S. persons. However, pursuant to § 537.530, U.S. persons may engage in new investment in Burma, provided that all conditions of that general license are satisfied. Section 537.311 defines the term *new investment* to include certain contracts providing for the general supervision and guarantee of another person's performance of a contract that includes the economic development of resources located in Burma. With respect to entry into such contracts, only the following will be considered new investment in Burma:

(a) Entry into contracts for supervision and guarantee at the highest level of project management, such as entry into a contract with a development project's sponsor or owner to become a prime contractor or general manager for a development project;

(b) Entry into subcontracts where the functional scope of the subcontractor's obligations is substantially similar to that of a prime contractor's or general manager's obligations for a development project; or

(c) Entry into a contract or subcontract where the consideration includes a share of ownership in, or participation in the royalties, earnings, or profits of, the economic development of resources located in Burma.

§ 537.411 [Reserved]

§ 537.412 Investments in entities involved in economic development projects in Burma.

(a) The purchase of shares in a third-country company that is engaged in the economic development of resources located in Burma is prohibited by § 537.204 where the company's profits are predominantly derived from the company's economic development of resources located in Burma. The purchase of such shares, however, is authorized by general license pursuant to § 537.530, provided that all conditions of that general license are satisfied.

(b) If a U.S. person holds shares in an entity which subsequently engages predominantly in the economic development of resources located in Burma or subsequently derives its income exclusively or predominantly from such economic development, the U.S. person is not required to relinquish its shares. Owning such shares, and purchasing additional shares is authorized by general license pursuant to § 537.530, provided that all conditions of that general license are satisfied.

§ 537.413 [Reserved]

§ 537.414 Charitable contributions.

Unless specifically authorized by OFAC pursuant to this part, no charitable contribution of funds, goods, services, or technology, including contributions to relieve human suffering, such as food, clothing, or medicine, may be made by, to, or for the benefit of, or received from, a person whose property and interests in property are blocked pursuant to § 537.201(a). For the purposes of this part, a contribution is made by, to, or for the benefit of, or received from, a person whose property and interests in property are blocked pursuant to § 537.201(a) if made by, to, or in the name of, or received from or in the name of, such a person; if made by, to, or in the name of, or received from or in the name of, an entity or individual acting for or on behalf of, or owned or controlled by, such a person; or if made in an attempt to violate, to evade, or to avoid the bar on the provision of contributions by, to, or for the benefit of such a person, or the receipt of contributions from such a person.

§ 537.415 Credit extended and cards issued by U.S. financial institutions to a person whose property and interests in property are blocked.

The prohibition in § 537.201 on dealing in property subject to that section prohibits U.S. financial institutions from performing under any existing credit agreements, including, but not limited to, charge cards, debit cards, or other credit facilities issued by a U.S. financial institution to a person whose property and interests in property are blocked pursuant to § 537.201(a).

§ 537.416 Entities owned by a person whose property and interests in property are blocked.

A person whose property and interests in property are blocked pursuant to § 537.201(a) has an interest in all property and interests in property of an entity in which it owns, directly or indirectly, a 50 percent or greater interest. The property and interests in property of such an entity, therefore, are blocked, and such an entity is a person whose property and interests in property are blocked pursuant to § 537.201(a), regardless of whether the name of the entity is incorporated into OFAC's Specially Designated Nationals and Blocked Persons List (SDN List).

§ 537.417 Importation into a bonded warehouse or foreign trade zone.

The prohibition in § 537.203 applies to importation into a bonded warehouse or a foreign trade zone of the United States.

§ 537.418 Facilitating new investment.

Consistent with § 537.530, U.S. persons may approve, finance, facilitate, or guarantee new investment by foreign persons provided such new investment is not pursuant to an agreement, or pursuant to the exercise of rights under such an agreement, that:

(a) Is entered into with the Burmese Ministry of Defense, state or non-state armed groups (which includes the military), or entities owned 50 percent or more by any of the foregoing, or

(b) involves a transaction, directly or indirectly, with any person whose property and interests and property are blocked pursuant to § 537.201(a).

Subpart E—Licenses, Authorizations, and Statements of Licensing Policy

§ 537.501 General and specific licensing procedures.

For provisions relating to licensing procedures, see part 501, subpart E, of this chapter. Licensing actions taken pursuant to part 501 of this chapter with respect to the prohibitions contained in this part are considered actions taken pursuant to this part. General licenses and statements of licensing policy relating to this part also may be available through the Burma sanctions page on OFAC's Web site: *www.treasury.gov/ofac*.

§ 537.502 Effect of license or authorization.

(a) No license or other authorization contained in this part, or otherwise issued by OFAC, authorizes or validates any transaction effected prior to the issuance of such license or other authorization, unless specifically provided in such license or authorization.

(b) No regulation, ruling, instruction, or license authorizes any transaction prohibited under this part unless the regulation, ruling, instruction, or license is issued by OFAC and specifically refers to this part. No regulation, ruling, instruction, or license referring to this part shall be deemed to authorize any transaction prohibited by any other part of this chapter unless the regulation, ruling, instruction, or license specifically refers to such part.

(c) Any regulation, ruling, instruction, or license authorizing any transaction otherwise prohibited under this part has the effect of removing a prohibition contained in this part from the transaction, but only to the extent specifically stated by its terms. Unless the regulation, ruling, instruction, or license otherwise specifies, such an authorization does not create any right, duty, obligation, claim, or interest in, or with respect to, any property which would not otherwise exist under ordinary principles of law.

(d) Nothing contained in this part shall be construed to supersede the requirements established under any other provision of law or to relieve a person from any requirement to obtain a license or other authorization from another department or agency of the U.S. Government in compliance with applicable laws and regulations subject to the jurisdiction of that department or agency. For example, exports of goods, services, or technical data which are not prohibited by this part or which do not require a license by OFAC, nevertheless may require authorization by the U.S. Department of Commerce, the U.S. Department of State, or other agencies of the U.S. Government.

(e) No license or other authorization contained in or issued pursuant to this part authorizes transfers of or payments from blocked property or debits to blocked accounts unless the license or other authorization explicitly authorizes the transfer of or payment from blocked

property or the debit to a blocked account.

(f) Any payment relating to a transaction authorized in or pursuant to this part that is routed through the U.S. financial system should reference the relevant OFAC general or specific license authorizing the payment to avoid the blocking or rejection of the transfer.

§ 537.503 Exclusion from licenses.

OFAC reserves the right to exclude any person, property, transaction, or class thereof from the operation of any license or from the privileges conferred by any license. OFAC also reserves the right to restrict the applicability of any license to particular persons, property, transactions, or classes thereof. Such actions are binding upon actual or constructive notice of the exclusions or restrictions.

§ 537.504 Payments and transfers to blocked accounts in U.S. financial institutions.

Any payment of funds or transfer of credit in which a person whose property and interests in property are blocked pursuant to § 537.201(a) has any interest that comes within the possession or control of a U.S. financial institution must be blocked in an account on the books of that financial institution. A transfer of funds or credit by a U.S. financial institution between blocked accounts in its branches or offices is authorized, provided that no transfer is made from an account within the United States to an account held outside the United States, and further provided that a transfer from a blocked account may be made only to another blocked account held in the same name.

Note to § 537.504: *See* § 501.603 of this chapter for mandatory reporting requirements regarding financial transfers. *See also* § 537.208 concerning the obligation to hold blocked funds in interest-bearing accounts.

§ 537.505 Entries in certain accounts for normal service charges authorized.

(a) A U.S. financial institution is authorized to debit any blocked account held at that financial institution in payment or reimbursement for normal service charges owed it by the owner of that blocked account.

(b) As used in this section, the term *normal service charges* shall include charges in payment or reimbursement for interest due; cable, telegraph, internet, or telephone charges; postage costs; custody fees; small adjustment charges to correct bookkeeping errors; and, but not by way of limitation, minimum balance charges, notary and protest fees, and charges for reference books, photocopies, credit reports, transcripts of statements, registered mail, insurance, stationery and supplies, and other similar items.

§ 537.506 Investment and reinvestment of certain funds.

Subject to the requirements of § 537.208, U.S. financial institutions are authorized to invest and reinvest assets blocked pursuant to § 537.201(a), subject to the following conditions:

(a) The assets representing such investments and reinvestments are credited to a blocked account or subaccount that is held in the same name at the same U.S. financial institution, or within the possession or control of a U.S. person, but funds shall not be transferred outside the United States for this purpose;

(b) The proceeds of such investments and reinvestments shall not be credited to a blocked account or subaccount under any name or designation that differs from the name or designation of the specific blocked account or subaccount in which such funds or securities were held; and

(c) No immediate financial or economic benefit accrues (*e.g.,* through pledging or other use) to a person whose property and interests in property are blocked pursuant to § 537.201(a).

§ 537.507 Provision of certain legal services authorized.

(a) The provision of the following legal services to or on behalf of persons whose property and interests in property are blocked pursuant to § 537.201(a) is authorized, provided that receipt of payment of professional fees and reimbursement of incurred expenses must be specifically licensed or otherwise authorized pursuant to § 537.528:

(1) Provision of legal advice and counseling on the requirements of and compliance with the laws of the United States or any jurisdiction within the United States, provided that such advice and counseling are not provided to facilitate transactions in violation of this part;

(2) Representation of persons named as defendants in or otherwise made parties to legal, arbitration, or administrative proceedings before any U.S. federal, state, or local court or agency;

(3) Initiation and conduct of legal, arbitration, or administrative proceedings before any U.S. federal, state, or local court or agency;

(4) Representation of persons before any U.S. federal, state, or local court or agency with respect to the imposition, administration, or enforcement of U.S. sanctions against such persons; and

(5) Provision of legal services in any other context in which prevailing U.S. law requires access to legal counsel at public expense.

(b) The provision of any other legal services to persons whose property and interests in property are blocked pursuant to § 537.201(a), not otherwise authorized in this part, requires the issuance of a specific license.

(c) Entry into a settlement agreement or the enforcement of any lien, judgment, arbitral award, decree, or other order through execution, garnishment, or other judicial process purporting to transfer or otherwise alter or affect property or interests in property blocked pursuant to § 537.201(a) is prohibited unless licensed pursuant to this part.

Note to § 537.507: U.S. persons seeking administrative reconsideration or judicial review of their designation or the blocking of their property and interests in property may apply for a specific license from OFAC to authorize the release of a limited amount of blocked funds for the payment of legal fees where alternative funding sources are not available. For more information, see OFAC's *Guidance on the Release of Limited Amounts of Blocked Funds for Payment of Legal Fees and Costs Incurred in Challenging the Blocking of U.S. Persons in Administrative or Civil Proceedings,* which is available on OFAC's Web site: *www.treasury.gov/ofac.*

§ 537.508 Authorization of emergency medical services.

The provision of nonscheduled emergency medical services in the United States to persons whose property and interests in property are blocked pursuant to § 537.201(a) is authorized, provided that all receipt of payment for such services must be specifically licensed.

§ 537.509 Official activities of certain international organizations authorized.

All transactions and activities otherwise prohibited by this part that are for the conduct of the official business of the United Nations or the Specialized Agencies, Programmes, Funds, and Related Organizations of the United Nations by employees, contractors, or grantees thereof are authorized.

Note to § 537.509: For an organizational chart listing the Specialized Agencies, Programmes, Funds, and Related Organizations of the United Nations, see the following page on the United Nations Web site: *www.un.org/en/aboutun/structure/pdfs/un-system-chart-color-sm.pdf.*

§§ 537.510–537.518 [Reserved]

§ 537.519 Activities undertaken pursuant to certain pre-May 21, 1997 agreements.

Except as prohibited by § 537.201(a) with respect to persons whose property and interests in property are blocked pursuant to Executive Order 13448 of October 18, 2007, Executive Order 13464 of April 30, 2008, or Executive Order 13619 of July 11, 2012, or by § 537.203, U.S. persons are authorized to engage in any activity, or any transaction incident to an activity, undertaken pursuant to an agreement entered into prior to 12:01 a.m., eastern daylight time, on May 21, 1997, or pursuant to the exercise of rights under such an agreement, provided that the parties to the agreement include:

(a) The Government of Burma or a nongovernmental entity in Burma, and

(b) An entity organized under the laws of a foreign state.

Note to § 537.519: The authorization contained in this section pertains to pre-May 21, 1997 contracts between foreign entities and either the Government of Burma or a nongovernmental entity in Burma. A parallel exemption for pre-May 21, 1997 contracts between U.S. persons and the Government of Burma or a nongovernmental entity in Burma is contained in § 537.210(d) and further explained in § 537.409.

§§ 537.520–537.521 [Reserved]

§ 537.522 Certain transactions related to patents, trademarks, copyrights, and other intellectual property authorized.

(a) All of the following transactions in connection with patent, trademark, copyright, or other intellectual property protection in the United States or Burma are authorized:

(1) The filing and prosecution of any application to obtain a patent, trademark, copyright, or other form of intellectual property protection;

(2) The receipt of a patent, trademark, copyright, or other form of intellectual property protection;

(3) The renewal or maintenance of a patent, trademark, copyright, or other form of intellectual property protection;

(4) The filing and prosecution of opposition or infringement proceedings with respect to a patent, trademark, copyright, or other form of intellectual property protection, or the entrance of a defense to any such proceedings; and

(5) The assignment or transfer of a patent, trademark, copyright, or other form of intellectual property protection.

(b) This section authorizes the payment of fees currently due to the United States Government or the Government of Burma, or of the reasonable and customary fees and charges currently due to attorneys or representatives within the United States or Burma, in connection with the transactions authorized in paragraph (a) of this section, except that payment effected pursuant to the terms of this paragraph may not be made from a blocked account.

§§ 537.523–537.525 [Reserved]

§ 537.526 Transactions necessary and ordinarily incident to publishing authorized.

To the extent that such activities are not exempt from this part, U.S. persons are authorized to engage in all transactions otherwise prohibited by § 537.201 that are necessary and ordinarily incident to the publishing and marketing of manuscripts, books, journals, and newspapers in paper or electronic format (collectively, ''written publications''). This section does not apply if the parties to the transactions described in this paragraph include the State Peace and Development Council of Burma or the Union Solidarity and Development Association of Burma; any successor entity to any of the foregoing entities; or any person, other than personnel of academic and research institutions, acting or purporting to act directly or indirectly on behalf of the foregoing entities with respect to the transactions described in this paragraph. Pursuant to this section, transactions incident to the following activities are authorized, provided they do not involve any importations prohibited by § 537.203:

(a) Commissioning and making advance payments for identifiable written publications not yet in existence, to the extent consistent with industry practice;

(b) Collaborating on the creation and enhancement of written publications;

(c)(1) Augmenting written publications through the addition of items such as photographs, artwork, translation, explanatory text, and, for a written publication in electronic format, the addition of embedded software necessary for reading, browsing, navigating, or searching the written publication;

(2) Exporting embedded software necessary for reading, browsing, navigating, or searching a written publication in electronic format, provided that, to the extent a license is required under the Export Administration Regulations, 15 CFR parts 730–774 (EAR), the exportation is licensed or otherwise authorized by the Department of Commerce under the provisions of the EAR;

(d) Substantive editing of written publications;

(e) Payment of royalties for written publications;

(f) Creating or undertaking a marketing campaign to promote a written publication; and

(g) Other transactions necessary and ordinarily incident to the publishing and marketing of written publications as described in this section.

Note 1 to § 537.526: The Department of State has determined that the State Peace and Development Council of Burma no longer exists.

Note 2 to § 537.526: *See* § 537.529 for a general license authorizing the exportation or reexportation of financial services to Burma.

§ 537.527 [Reserved]

§ 537.528 Payments for legal services from funds originating outside the United States authorized.

Receipts of payment of professional fees and reimbursement of incurred expenses for the provision of legal services authorized pursuant to § 537.507(a) to or on behalf of any person whose property and interests in property are blocked pursuant to § 537.201(a) are authorized from funds originating outside the United States, provided that:

(a) Prior to receiving payment for legal services authorized pursuant to § 537.507(a) rendered to persons whose property and interests in property are blocked pursuant to § 537.201(a), the U.S. person that is an attorney, law firm, or legal services organization provides to OFAC a copy of a letter of engagement or a letter of intent to engage specifying the services to be performed and signed by the individual to whom such services are to be provided or, where services are to be provided to an entity, by a legal representative of the entity. The copy of a letter of engagement or a letter of intent to engage, accompanied by correspondence referencing this paragraph (a), is to be mailed to: Licensing Division, Office of Foreign Assets Control, U.S. Department of the Treasury, 1500 Pennsylvania Avenue NW., Annex, Washington, DC 20220;

(b) The funds received by U.S. persons as payment of professional fees and reimbursement of incurred expenses for the provision of legal services authorized pursuant to § 537.507(a) must not originate from:

(1) A source within the United States;

(2) Any source, wherever located, within the possession or control of a U.S. person; or

(3) Any individual or entity, other than the person on whose behalf the legal services authorized pursuant to § 537.507(a) are to be provided, whose property and interests in property are

blocked pursuant to any part of this chapter or any Executive order;

Note to § 537.528(b): This paragraph authorizes the blocked person on whose behalf the legal services authorized pursuant to § 537.507(a) are to be provided to make payments for authorized legal services using funds originating outside the United States that were not previously blocked. Nothing in this paragraph authorizes payments for legal services using funds in which any other person whose property and interests in property are blocked pursuant to § 537.201(a), any other part of this chapter, or any Executive order holds an interest.

(c) *Reports.* (1) U.S. persons who receive payments in connection with legal services authorized pursuant to § 537.507(a) must submit quarterly reports no later than 30 days following the end of the calendar quarter during which the payments were received providing information on the funds received. Such reports shall specify:

(i) The individual or entity from whom the funds originated and the amount of funds received; and

(ii) If applicable:

(A) The names of any individuals or entities providing related services to the U.S. person receiving payment in connection with authorized legal services, such as private investigators or expert witnesses;

(B) A general description of the services provided; and

(C) The amount of funds paid in connection with such services.

(2) In the event that no transactions occur or no funds are received during the reporting period, a statement is to be filed to that effect; and

(3) The reports, which must reference this section, are to be mailed to: Licensing Division, Office of Foreign Assets Control, U.S. Department of the Treasury, 1500 Pennsylvania Avenue NW., Annex, Washington, DC 20220.

Note to § 537.528: U.S. persons who receive payments in connection with legal services authorized pursuant to § 537.507(a) do not need to obtain specific authorization to contract for related services that are ordinarily incident to the provision of those legal services, such as those provided by private investigators or expert witnesses, or to pay for such services. Additionally, U.S. persons do not need to obtain specific authorization to provide related services that are ordinarily incident to the provision of legal services authorized pursuant to § 537.507(a).

§ 537.529 Exportation or reexportation of financial services to Burma authorized.

(a) Except as provided in paragraphs (b)–(d) of this section, the exportation or reexportation of financial services to Burma, directly or indirectly, from the United States or by a U.S. person, wherever located, is authorized.

(b) This section does not authorize, in connection with the provision of security services, the exportation or reexportation of financial services, directly or indirectly, to the Burmese Ministry of Defense, including the Office of Procurement; any state or non-state armed group; or any entity in which any of the foregoing own a 50 percent or greater interest.

(c) This section does not authorize the exportation or reexportation of financial services, directly or indirectly, to any person whose property and interests in property are blocked pursuant to § 537.201(a), except as set forth in § 537.404(b).

Note to § 537.529(c): *See* § 537.531 for a general license authorizing transactions involving certain Burmese financial institutions whose property and interests in property are blocked pursuant to § 537.201(a), including establishing and maintaining accounts on the books of U.S. financial institutions.

(d) This section does not authorize any debit to a blocked account.

Note to § 537.529: As a result of the authorization contained in this section, the special measures against Burma imposed under Section 311 of the Uniting and Strengthening America by Providing Appropriate Tools Required to Intercept and Obstruct Terrorism (USA PATRIOT) Act of 2001 (Pub. L. 107–56) (USA PATRIOT Act) do not apply to the operation of correspondent accounts for Burmese financial institutions, or to transactions that are conducted through those accounts, provided the Burmese financial institution is not an entity whose property and interests in property are blocked pursuant to § 537.201(a) and the transactions are otherwise authorized by this part, and therefore fall within the exception set forth in 31 CFR 1010.651(b)(3). In addition, section 537.531 of this part authorizes certain transactions involving specific Burmese financial institutions whose property and interests in property are blocked pursuant to this part. This section does not affect any obligation of U.S. financial institutions processing such transactions to conduct enhanced due diligence under Section 312 of the USA PATRIOT Act. *See* 31 CFR 1010.610(c).

§ 537.530 New investment in Burma by U.S. persons authorized.

(a) Except as provided in paragraphs (c) and (d) of this section, new investment, as defined in § 537.311, in Burma by U.S. persons is authorized.

(b) Any U.S. person engaging in new investment in Burma pursuant to this section must report to the Department of State in compliance with the requirements set forth in the Department of State's ''Reporting Requirements on Responsible Investment in Burma,'' available at: *www.HumanRights.gov/BurmaResponsibleInvestment.*

(c) This section does not authorize new investment undertaken pursuant to an agreement, or pursuant to the exercise of rights under such an agreement, that is entered into with the Burmese Ministry of Defense, including the Office of Procurement; any state or non-state armed group; or any entity in which any of the foregoing own a 50 percent or greater interest.

(d) This section does not authorize transactions with, directly or indirectly, any person whose property and interests in property are blocked pursuant to § 537.201(a).

Note to § 537.530: The Department of State, pursuant to section 570(e) of the Foreign Operations, Export Financing, and Related Programs Appropriations Act, 1997 (Pub. L. 104–208) and a delegation of authority by the President, has waived the prohibition on new investment in Burma authorized in section 570 of that act. *See* 77 Fed. Reg. 62596 (Oct. 15, 2012).

§ 537.531 Certain transactions involving Asia Green Development Bank, Ayeyarwady Bank, Myanma Economic Bank, and Myanma Investment and Commercial Bank authorized.

(a) Except as provided in paragraphs (b) through (f) of this section, all transactions involving Asia Green Development Bank, Ayeyarwady Bank, Myanma Economic Bank, and Myanma Investment and Commercial Bank are authorized.

(b) This section does not authorize transactions involving any person whose property and interests in property are blocked pursuant to § 537.201(a) other than Asia Green Development Bank, Ayeyarwady Bank, Myanma Economic Bank, and Myanma Investment and Commercial Bank.

(c) This section does not authorize, in connection with the provision of security services, the exportation or reexportation of financial services, directly or indirectly, to the Burmese Ministry of Defense, including the Office of Procurement; any state or non-state armed group; or any entity in which any of the foregoing own a 50 percent or greater interest.

(d) This section does not authorize any new investment, as defined in § 537.311, including in or with Asia Green Development Bank, Ayeyarwady Bank, Myanma Economic Bank, or Myanma Investment and Commercial Bank.

(e) This section does not authorize any importations into the United States prohibited by § 537.203.

(f) This section does not authorize the unblocking of any property and interests

in property that were blocked as of February 22, 2013, pursuant to 31 CFR § 537.201(a), Executive Order 13448 of October 18, 2007, Executive Order 13464 of April 30, 2008, or Executive Order 13619 of July 11, 2012.

Note to § 537.531: As a result of the authorization contained in this section, the special measures against Burma imposed under Section 311 of the Uniting and Strengthening America by Providing Appropriate Tools Required to Intercept and Obstruct Terrorism (USA PATRIOT) Act of 2001 (Pub. L. 107–56) (USA PATRIOT Act) do not apply to the operation of correspondent accounts for Asia Green Development Bank, Ayeyarwady Bank, Myanma Economic Bank, and Myanma Investment and Commercial Bank, or to transactions conducted through such accounts, provided the transactions are authorized pursuant to this part, and therefore fall within the exception set forth in 31 CFR 1010.651(b)(3). This section does not affect any obligation of U.S. financial institutions processing such transactions to conduct enhanced due diligence under Section 312 of the USA PATRIOT Act. *See* 31 CFR 1010.610(c).

Subpart F—Reports

§ 537.601 Records and reports.

For provisions relating to required records and reports, see part 501, subpart C, of this chapter. Recordkeeping and reporting requirements imposed by part 501 of this chapter with respect to the prohibitions contained in this part are considered requirements arising pursuant to this part.

Subpart G—Penalties

§ 537.701 Penalties.

(a) Attention is directed to section 206 of the International Emergency Economic Powers Act (50 U.S.C. 1705) (IEEPA), which is applicable to violations of the provisions of any license, ruling, regulation, order, directive, or instruction issued by or pursuant to the direction or authorization of the Secretary of the Treasury pursuant to this part or otherwise under IEEPA.

(1) A civil penalty not to exceed the amount set forth in section 206 of IEEPA may be imposed on any person who violates, attempts to violate, conspires to violate, or causes a violation of any license, order, regulation, or prohibition issued under IEEPA.

Note to § 537.701(a)(1): As of the date of publication in the **Federal Register** of the final rule amending and reissuing this part (June 30, 2014), IEEPA provides for a maximum civil penalty not to exceed the greater of $250,000 or an amount that is twice the amount of the transaction that is the basis of the violation with respect to which the penalty is imposed.

(2) A person who willfully commits, willfully attempts to commit, or willfully conspires to commit, or aids or abets in the commission of a violation of any license, order, regulation, or prohibition may, upon conviction, be fined not more than $1,000,000, or if a natural person, be imprisoned for not more than 20 years, or both.

(b) *Adjustments to penalty amounts.* (1) The civil penalties provided in IEEPA are subject to adjustment pursuant to the Federal Civil Penalties Inflation Adjustment Act of 1990 (Pub. L. 101–410, as amended, 28 U.S.C. 2461 note).

(2) The criminal penalties provided in IEEPA are subject to adjustment pursuant to 18 U.S.C. 3571.

(c) Attention is also directed to 18 U.S.C. 1001, which provides that whoever, in any matter within the jurisdiction of the executive, legislative, or judicial branch of the Government of the United States, knowingly and willfully falsifies, conceals, or covers up by any trick, scheme, or device a material fact, or makes any materially false, fictitious, or fraudulent statement or representation, or makes or uses any false writing or document knowing the same to contain any materially false, fictitious, or fraudulent statement or entry shall be fined under title 18, United States Code, or imprisoned, or both.

(d) Violations of this part may also be subject to other applicable laws.

Note to § 537.701: The Tom Lantos Block Burmese JADE (Junta's Anti-Democratic Efforts) Act of 2008 (the ''JADE Act'') provides that any person who violates any prohibition imposed pursuant to Section 5(b) of the JADE Act shall be subject to the penalties provided in IEEPA. In Executive Order 13651 of August 6, 2013, the President waived pursuant to Section 5(i) of JADE Act the blocking and financial sanctions described in Section 5(b) of the JADE Act.

§ 537.702 Pre-Penalty Notice; settlement.

(a) *When required.* If OFAC has reason to believe that there has occurred a violation of any provision of this part or a violation of the provisions of any license, ruling, regulation, order, direction, or instruction issued by or pursuant to the direction or authorization of the Secretary of the Treasury pursuant to this part or otherwise under the International Emergency Economic Powers Act (50 U.S.C. 1705) (IEEPA) and determines that a civil monetary penalty is warranted, OFAC will issue a Pre-Penalty Notice informing the alleged violator of the agency's intent to impose a monetary penalty. A Pre-Penalty Notice shall be in writing. The Pre-Penalty Notice may be issued whether or not another agency has taken any action with respect to the matter. For a description of the contents of a Pre-Penalty Notice, see Appendix A to part 501 of this chapter.

(b)(1) *Right to respond.* An alleged violator has the right to respond to a Pre-Penalty Notice by making a written presentation to OFAC. For a description of the information that should be included in such a response, see Appendix A to part 501 of this chapter.

(2) *Deadline for response.* A response to a Pre-Penalty Notice must be made within the applicable 30-day period set forth in this paragraph. The failure to submit a response within the applicable time period set forth in this paragraph shall be deemed to be a waiver of the right to respond.

(i) *Computation of time for response.* A response to a Pre-Penalty Notice must be postmarked or date-stamped by the U.S. Postal Service (or foreign postal service, if mailed abroad) or courier service provider (if transmitted to OFAC by courier) on or before the 30th day after the postmark date on the envelope in which the Pre-Penalty Notice was mailed. If the Pre-Penalty Notice was personally delivered by a non-U.S. Postal Service agent authorized by OFAC, a response must be postmarked or date-stamped on or before the 30th day after the date of delivery.

(ii) *Extensions of time for response.* If a due date falls on a federal holiday or weekend, that due date is extended to include the following business day. Any other extensions of time will be granted, at the discretion of OFAC, only upon specific request to OFAC.

(3) *Form and method of response.* A response to a Pre-Penalty Notice need not be in any particular form, but it must be typewritten and signed by the alleged violator or a representative thereof, must contain information sufficient to indicate that it is in response to the Pre-Penalty Notice, and must include the OFAC identification number listed on the Pre-Penalty Notice. A copy of the written response may be sent by facsimile, but the original also must be sent to OFAC's Enforcement Division by mail or courier and must be postmarked or date-stamped in accordance with paragraph (b)(2) of this section.

(c) *Settlement.* Settlement discussion may be initiated by OFAC, the alleged violator, or the alleged violator's authorized representative. For a description of practices with respect to settlement, see Appendix A to part 501 of this chapter.

(d) *Guidelines.* Guidelines for the imposition or settlement of civil penalties by OFAC are contained in Appendix A to part 501 of this chapter.

(e) *Representation.* A representative of the alleged violator may act on behalf of the alleged violator, but any oral communication with OFAC prior to a written submission regarding the specific allegations contained in the Pre-Penalty Notice must be preceded by a written letter of representation, unless the Pre-Penalty Notice was served upon the alleged violator in care of the representative.

§ 537.703 Penalty imposition.

If, after considering any written response to the Pre-Penalty Notice and any relevant facts, OFAC determines that there was a violation by the alleged violator named in the Pre-Penalty Notice and that a civil monetary penalty is appropriate, OFAC may issue a Penalty Notice to the violator containing a determination of the violation and the imposition of the monetary penalty. For additional details concerning issuance of a Penalty Notice, see Appendix A to part 501 of this chapter. The issuance of the Penalty Notice shall constitute final agency action. The violator has the right to seek judicial review of that final agency action in federal district court.

§ 537.704 Administrative collection; referral to United States Department of Justice.

In the event that the violator does not pay the penalty imposed pursuant to this part or make payment arrangements acceptable to OFAC, the matter may be referred for administrative collection measures by the Department of the Treasury or to the United States Department of Justice for appropriate action to recover the penalty in a civil suit in a federal district court.

Subpart H—Procedures

§ 537.801 Procedures.

For license application procedures and procedures relating to amendments, modifications, or revocations of licenses; administrative decisions; rulemaking; and requests for documents pursuant to the Freedom of Information and Privacy Acts (5 U.S.C. 552 and 552a), see part 501, subpart E, of this chapter.

§ 537.802 Delegation by the Secretary of the Treasury.

Any action that the Secretary of the Treasury is authorized to take pursuant to the Tom Lantos Block Burmese JADE (Junta's Anti-Democratic Efforts) Act of 2008 (Pub. L. 110–286); Executive Order 13047 of May 20, 1997, Executive Order 13310 of July 28, 2003, Executive Order 13448 of October 18, 2007, Executive Order 13464 of April 30, 2008, Executive Order 13619 of July 11, 2012, Executive Order 13651 of August 6, 2013, and any further Executive orders relating to the national emergency declared in Executive Order 13047, may be taken by the Director of OFAC or by any other person to whom the Secretary of the Treasury has delegated authority so to act.

Subpart I—Paperwork Reduction Act

§ 537.901 Paperwork Reduction Act notice.

For approval by the Office of Management and Budget (OMB) under the Paperwork Reduction Act of 1995 (44 U.S.C. 3507) of information collections relating to recordkeeping and reporting requirements, licensing procedures (including those pursuant to statements of licensing policy), and other procedures, see § 501.901 of this chapter. An agency may not conduct or sponsor, and a person is not required to respond to, a collection of information unless it displays a valid control number assigned by OMB.

Dated: June 18, 2014.

Barbara C. Hammerle,

Acting Director, Office of Foreign Assets Control.

Approved: June 18, 2014.

David S. Cohen,

Under Secretary, Office of Terrorism and Financial Intelligence, Department of the Treasury.

[FR Doc. 2014–14841 Filed 6–25–14; 4:15 pm]

BILLING CODE 4810–AL–P

FEDERAL REGISTER

Vol. 79 Monday,

No. 125 June 30, 2014

Part V

Nuclear Regulatory Commission

10 CFR Parts 170 and 171

Revision of Fee Schedules; Fee Recovery for Fiscal Year 2014; Final Rule

NUCLEAR REGULATORY COMMISSION

10 CFR Parts 170 and 171

[NRC–2013–0276]

RIN 3150–AJ32

Revision of Fee Schedules; Fee Recovery for Fiscal Year 2014

AGENCY: Nuclear Regulatory Commission.

ACTION: Final rule.

SUMMARY: The U.S. Nuclear Regulatory Commission (NRC) is amending the licensing, inspection, and annual fees charged to its applicants and licensees. These amendments are necessary to implement the Omnibus Budget Reconciliation Act of 1990 (OBRA–90), as amended, which requires the NRC to recover through fees approximately 90 percent of its budget authority in Fiscal Year (FY) 2014, not including amounts appropriated for Waste Incidental to Reprocessing (WIR), amounts appropriated for generic homeland security activities, and Inspector General (IG) services for the Defense Nuclear Facilities Safety Board (DNFSB). These fees represent the cost of the NRC's services provided to applicants and licensees.

DATES: This final rule is effective on August 29, 2014.

ADDRESSES: Please refer to Docket ID NRC–2013–0276 when contacting the NRC about the availability of information for this final rule. You may access publicly-available information related to this final rule by any of the following methods:

- *Federal Rulemaking Web site:* Go to *http://www.regulations.gov* and search for Docket ID NRC–2013–0276. Address questions about NRC dockets to Carol Gallagher; telephone: 301–287–3422; email: *Carol.Gallagher@nrc.gov.* For technical questions, contact the individual listed in the **FOR FURTHER INFORMATION CONTACT** section of this final rule.
- *NRC's Agencywide Documents Access and Management System (ADAMS):* You may obtain publicly available documents online in the ADAMS Public Documents collection at *http://www.nrc.gov/reading-rm/adams.html.* To begin the search, select ''ADAMS Public Documents'' and then select ''Begin Web-based ADAMS Search.'' For problems with ADAMS, please contact the NRC's Public Document Room (PDR) reference staff at 1–800–397–4209, 301–415–4737, or by email to *pdr.resource@nrc.gov.* For the convenience of the reader, instructions about obtaining materials referenced in this document are provided in the ''Availability of Documents'' section of this document.
- *NRC's PDR:* You may examine and purchase copies of public documents at the NRC's PDR, Room O1–F21, One White Flint North, 11555 Rockville Pike, Rockville, Maryland 20852.

FOR FURTHER INFORMATION CONTACT: Arlette Howard, Office of the Chief Financial Officer, U.S. Nuclear Regulatory Commission, Washington, DC 20555–0001, telephone: 301–415–1481, email: *Arlette.Howard@nrc.gov.*

SUPPLEMENTARY INFORMATION:

Table of Contents

I. Background
II. Discussion
III. Opportunities for Public Participation
IV. Public Comment Analysis
V. Section-by-Section Analysis
VI. Regulatory Flexibility Certification
VII. Regulatory Analysis
VIII. Backfitting and Issue Finality
IX. Plain Writing
X. National Environmental Policy Act
XI. Paperwork Reduction Act
XII. Congressional Review Act
XIII. Voluntary Consensus Standards
XIV. Availability of Guidance
XV. Availability of Documents

I. Background

Over the past 40 years the NRC (and earlier, as the Atomic Energy Commission, the NRC's predecessor agency) has assessed and continues to assess fees to applicants and licensees to recover the cost of its regulatory program. The NRC's cost recovery principles for fee regulation are governed by two major laws: (1) The Independent Offices Appropriations Act of 1952 (IOAA) (31 U.S.C. 483(a)); and (2) OBRA–90 (42 U.S.C. 2214), as amended. The NRC is required each year, under OBRA–90, as amended, to recover approximately 90 percent of its budget authority, not including amounts appropriated for WIR, amounts appropriated for generic homeland security activities (non-fee items), and IG services for the DNFSB, through fees to the NRC licensees and applicants.

In addition to the requirements of OBRA–90, as amended, the NRC is also required to comply with the requirements of the Small Business Regulatory Enforcement Fairness Act of 1996. This Act encourages small businesses to participate in the regulatory process, and requires agencies to develop more accessible sources of information on regulatory and reporting requirements for small businesses and create a small entity compliance guide. The NRC, in order to ensure equitable fee distribution among all licensees, develops a fee methodology specifically for small entities that consisted of a small entity definition and the Small Business Administration's most common receipts-based size standards as described under the North American Industry Classification System (NAICS) identifying industry codes. The NAICS is the standard used by Federal statistical agencies to classify business establishments for the purposes of collecting, analyzing, and publishing statistical data related to the U.S. business economy. The purpose of this fee methodology is to lessen the financial impact on small entities through the establishment of a maximum fee at a reduced rate for qualifying licensees.

In FY 2013, the NRC staff performed a biennial review using the fee methodology developed in FY 2009 that applies a fixed percentage of 39 percent to the prior 2-year weighted average of materials users' fees. This methodology disproportionately impacted NRC's small licensees compared to other licensees; therefore, the NRC staff limited the increase to 21 percent, the same as FY 2011. The change resulted in a fee of $2,800 for an upper-tier small entity and $600 for a lower-tier small entity for FY 2013. The NRC staff believes these small-entity fees are reasonable and provide relief to small entities while at the same time recovering from those licensees some of the NRC's costs for activities that benefit them. For this fee rule, the small entity fees remain unchanged. The next biennial review will be conducted in FY 2015.

II. Discussion

In compliance with OBRA–90, as amended, and the Atomic Energy Act (AEA), the NRC amends its fee schedules for 10 CFR parts 170 and 171 to recover approximately 90 percent of its FY 2014 budget authority, less the amounts appropriated for WIR, the Nuclear Waste Fund (NWF), generic homeland security activities, and IG services for the DNFSB. The 10 CFR part 170 user fees, under the authority of the IOAA, recover the NRC's costs of providing special benefits to identifiable applicants and licensees. For example, the NRC assesses these fees to cover the costs of inspections, applications for new licenses and license renewals, and requests for license amendments. The 10 CFR part 171 annual fees recover generic regulatory costs not otherwise recovered through 10 CFR part 170 fees.

FY 2014 Fee Collection

The NRC received total appropriations of $1,055.9 million for FY 2014 based on the Consolidated Appropriations Act (Pub. L. 113–76), signed by President Obama on January 17, 2014. Based on OBRA–90, as amended, the NRC is required to recover $930.7 million through 10 CFR part 170 licensing and inspections and 10 CFR part 171 annual fees for FY 2014. This amount excludes non-fee items for WIR activities totaling $1.4 million, IG services for the DNFSB totaling $0.9 million, and generic homeland security activities totaling $19.5 million. The required fee recovery amount is $66.8 million more than the amount estimated for recovery in FY 2013, an increase of 7.7 percent. After accounting for billing adjustments, this amount is further decreased by $14.0 million as a result of net billing adjustments (sum of unpaid current year invoices (estimated) minus payments for prior year invoices and current year collections for a reclassified fuel facility licensee). This leaves approximately $916.7 million in FY 2014 to be billed as fees to licensees for 10 CFR part 170 licensing and inspection fees and 10 CFR part 171 annual fees. This amount represents a $2.2 million decrease in fees assessed to licensees from the FY 2014 proposed fee rule published on April 14, 2014 (79 FR 21036).

Table I summarizes the budget and fee recovery amounts for FY 2014. The FY 2013 amounts are provided for comparison purposes. (Individual values may not sum to totals due to rounding.)

TABLE I—BUDGET AND FEE RECOVERY AMOUNTS

[Dollars in millions]

	FY 2013 final rule	FY 2014 final rule
Total Budget Authority	$985.6	$1,055.9
Less Non-Fee Items	*−25.7*	*−21.8*
Balance	$959.9	$1,034.1
Fee Recovery Rate	*90%*	*90%*
Total Amount to be Recovered	864.0	930.7
10 CFR Part 171 Billing Adjustments:		
Unpaid Current Year Invoices (estimated)	2.2	0.5
Less Current Year from Collections (Terminated or Reclassified licensees)	−4.6	−2.2
Less Payments Received in Current Year for Previous Year Invoices (estimated)	*−2.0*	*−12.3*
Subtotal	−4.4	−14.0
Amount to be Recovered through 10 CFR Parts 170 and 171 from Current Licensees Fees	$859.6	$916.7
Less Estimated 10 CFR Part 170 Fees	*−327.1*	*−332.5*
Less Prior Year Unbilled 10 CFR Part 170 Fees	*−20.9*	*−0*
10 CFR Part 171 Fee Collections Required from Current Licensees	$511.6	$584.2

Changes From the FY 2013 Final Fee Rule

In this final fee rule, the NRC amends fees for power reactors, spent fuel storage/reactor decommissioning, non-power reactors, uranium recovery facilities, fuel facilities, materials users, and the U.S. Department of Energy's (DOE) transportation license as compared to the FY 2013 final fee rule. The total amount of annual fees to be recovered, $584.2 million, represents an increase of $72.6 million from the FY 2013 final rule. Overall, the operating reactors' annual fees increase from the FY 2013 final rule as a result of increased budgetary resources with an unsequestrated budget, the absence of a one-time billing credit of approximately $20 million from FY 2013, and the reduction of two reactors (San Onofre Nuclear Generating Station (SONGS), Units 2 and 3).

Changes From the FY 2014 Proposed Fee Rule

In this final rule, the 10 CFR part 170 fees also increase $8 million due to an increase in licensing actions for operating reactors of $10.5 million and generic decommissioning by approximately $0.1 million offset by a decrease in 10 CFR part 170 of $2.6 million for fuel facilities. The operating reactor annual fees decrease by approximately $10.5 million from the FY 2014 proposed fee rule estimate.

The fuel facilities annual fees increase by $0.4 million from the FY 2014 proposed rule as a result of reduced 10 CFR part 170 billings of $2.6 million due to new construction project delays with an offset of a $2.2 million reclassification adjustment for current year billings for an approved downgraded fuel facility licensee (USEC Paducah) under fee category 1.E., Licenses or certificates for the operation of a uranium enrichment facility. The NRC removed USEC Paducah from the enrichment category and placed the facility under 10 CFR part 171 annual fee category 1.A.(2)(a), ''Limited Operations,'' on May 28, 2014. The USEC Paducah shut down with no plans to restart the enrichment cascades. The USEC Paducah shipped uranium hexafluoride (UF_6) feed and product material to other facilities for storage and management and is currently in the process of deleasing the facilities. The one-time credit applied to fuel facility licensees is for the current year revenue received while USEC Paducah was licensed under fee category 1.E. Decreases in some fuel facilities annual fees can also be attributed to revisions to their effort factors within the Fuel Facilities matrix used to compute the fee calculations.

As a result of these changes, the 10 CFR part 171 annual fees for current licensees decrease by $10.2 million from the proposed rule. Overall, the percentage changes in most annual fees increase moderately compared to the previous year with the exception of operating reactors and uranium recovery annual fees. For this final rule, the FTE rate used to convert budgetary resources into FTE dollars remains unchanged from the proposed rule.

Hourly Rate

The NRC's hourly rate is used in assessing full cost fees for specific services provided, as well as flat fees for certain application reviews. The NRC is increasing the current hourly rate of $272 to $279 in FY 2014. This rate is

applicable to all activities for which fees are assessed under §§ 170.21 and 170.31.

The FY 2014 hourly rate is 2.6 percent higher than the FY 2013 hourly rate of $272. The increase in the hourly rate is due primarily to higher agency-budgeted resources and a decrease in the number of mission direct full-time equivalents (FTE) compared to FY 2013.

The NRC's hourly rate is derived by dividing the sum of recoverable budgeted resources for: (1) Mission-direct program salaries and benefits; (2) mission-indirect program support; and (3) agency corporate support and the IG, which is all agency indirect costs (i.e. overhead, by mission-direct FTE hours. The mission-direct FTE hours are the product of the mission-direct FTE multiplied by the hours per direct FTE. The only budgeted resources excluded from the hourly rate are those for contract activities related to mission-direct and fee-relief activities.

In FY 2014, the NRC used 1,375 hours per direct FTE, an increase of 24 hours from FY 2013, to calculate the hourly fee rate. These hours exclude all indirect activities such as training, general administration, and leave, and include only those activities that directly support the NRC's mission. The NRC generated this 1,375 hour figure by reviewing data from its time and labor system.

Table II shows the results of the hourly rate calculation methodology. The FY 2013 amounts are provided for comparison purposes. (Individual values may not sum to totals due to rounding.)

TABLE II—HOURLY RATE CALCULATION

	FY 2013 final rule	FY 2014 final rule
Mission-Direct Program Salaries & Benefits	$345.1	$359.2
Mission-Indirect Program Support	19.7	21.0
Agency Corporate Support, and the IG	*474.8*	*486.0*
Subtotal	839.6	866.2
Less Offsetting Receipts	*− 0.0*	*− 0.0*
Total Budget Included in Hourly Rate (Millions of Dollars)	839.6	866.2
Mission-Direct FTE (Whole numbers)	2,285	2,254
Professional Hourly Rate (Total Budget Included in Hourly Rate divided by Mission-Direct FTE Hours) (Whole Numbers)	272	279

As shown in Table II, dividing the FY 2014 $866.2 million budget amount included in the hourly rate by total mission-direct FTE hours (2,254 FTE times 1,375 hours) results in an hourly rate of $279. The hourly rate is rounded to the nearest whole dollar.

Flat Application Fee Changes

The NRC is amending the current flat application fees in §§ 170.21 and 170.31 to reflect the revised hourly rate of $279. These flat fees are calculated by multiplying the average professional staff hours needed to process the licensing actions by the professional hourly rate for FY 2014. The agency estimates the average professional staff hours needed to process licensing actions every other year as part of its biennial review of fees performed in compliance with the Chief Financial Officers Act of 1990. The NRC last performed this review as part of the FY 2013 fee rulemaking. The higher hourly rate of $279 is the primary reason for the increase in application fees.

The amounts of the materials licensing flat fees are rounded so that the fees would be convenient to the user and the effects of rounding would be minimal. Fees under $1,000 are rounded to the nearest $10, fees that are greater than $1,000 but less than $100,000 are rounded to the nearest $100, and fees that are greater than $100,000 are rounded to the nearest $1,000.

The final licensing flat fees are applicable for fee categories K.1. through K.5. of § 170.21, and fee categories 1.C. through 1.D., 2.B. through 2.F., 3.A. through 3.S., 4.B. through 9.D., 10.B., 15.A. through 15.L., 15.R., and 16 of § 170.31. Applications filed on or after the effective date of the FY 2014 final fee rule are subject to the revised fees in the final rule.

Application of Fee-Relief and Low-Level Waste (LLW) Surcharge

The NRC will assess a total of $1.9 million to licensees' annual fees for both fee-relief activities and LLW surcharge based on their share of the fee recoverable budget authority. For this rulemaking, the NRC establishes rebaselined annual fees by changing the number of licensees in accordance with SECY–05–0164, ''Annual Fee Calculation Method,'' September 15, 2005 (ADAMS Accession No. ML052580332). The rebaselining method analyzes the budget in detail and allocates the budgeted costs to various classes or subclasses of licensees. This method is currently used by the NRC every year.

Specifically, the NRC will use its fee-relief surplus to decrease all licensees' annual fees, based on their percentage share of the budget. The NRC will apply the 10 percent of its budget that is excluded from fee recovery under OBRA–90, as amended (fee relief), to offset the total budget allocated for activities that do not directly benefit current NRC licensees. The budget for these fee-relief activities is totaled and then reduced by the amount of the NRC's fee relief. Any difference between the fee-relief and the budgeted amount of these activities results in a fee-relief adjustment (increase or decrease) to all licensees' annual fees, based on their percentage share of the budget, which is consistent with the existing fee methodology.

In comparison to FY 2013, the budgetary resources in FY 2014 increased for fee-relief activities due to increased rulemaking activities for research and test reactors, increased training and travel resources under Agreement State Oversight, and a reduction in decommissioning billings under 10 CFR part 170, which lowered the offset under decommissioning activities for total fee relief resources.

In comparison to the FY 2014 proposed fee rule, budgetary resources decrease for fee relief in this final due in part to a $100,000 reduction to the fee relief budget from increased 10 CFR part 170 billings for the generic decommissioning/reclamation under the fee relief categories. As a result, of this change, some licensees received a minimal reduction in fees in this final rule.

Table III summarizes the fee-relief activities for FY 2014. The FY 2013

amounts are provided for comparison purposes. (Individual values may not sum to totals due to rounding.)

TABLE III—FEE-RELIEF ACTIVITIES

[Dollars in millions]

Fee-relief activities	FY 2013 budgeted costs	FY 2014 budgeted costs
1. Activities not attributable to an existing NRC licensee or class of licensee:		
a. International activities	$10.2	$11.2
b. Agreement State oversight	10.3	12.6
c. Scholarships and Fellowships	16.4	18.9
d. Medical Isotope Production	3.5	3.1
2. Activities not assessed under 10 CFR part 170 licensing and inspection fees or 10 CFR part 171 annual fees based on existing law or Commission policy:		
a. Fee exemption for nonprofit educational institutions	10.2	11.9
b. Costs not recovered from small entities under 10 CFR 171.16(c)	7.7	8.4
c. Regulatory support to Agreement States	16.3	17.9
d. Generic decommissioning/reclamation (not related to the power reactor and spent fuel storage fee classes)	13.9	17.1
e. *In Situ* leach rulemaking and unregistered general licensees	*1.3*	*1.0*
Total fee-relief activities	89.8	102.1
Less 10 percent of the NRC's total FY budget (less non-fee items)	*−96.0*	*−103.4*
Fee-Relief Adjustment to be Allocated to All Licensees' Annual Fees	−6.2	−1.3

Table IV shows how the NRC will allocate the $1.3 million fee-relief assessment adjustment to each license fee class. As explained previously, the NRC will allocate this fee-relief adjustment to each license fee class based on their percentage of the budget for their fee class compared to the NRC's total budget. The fee-relief surplus adjustment is subtracted from the required annual fee recovery for each fee class.

Separately, the NRC has continued to allocate the LLW surcharge based on the volume of LLW disposal of three classes of licenses: Operating reactors, fuel facilities, and materials users. Because LLW activities support NRC licensees and Agreement States, the costs of these activities are recovered through annual fees. In FY 2014, this allocation percentage remains the same as FY 2013 based on a recent review of data by fee class.

Table IV also shows the allocation of the LLW surcharge activity. For FY 2014, the total budget allocated for LLW activity is $3.2 million. (Individual values may not sum to totals due to rounding.)

TABLE IV—ALLOCATION OF FEE-RELIEF ADJUSTMENT AND LLW SURCHARGE, FY 2014

[Dollars in millions]

	LLW surcharge		Fee-relief adjustment		Total
	Percent	$	Percent	$	$
Operating Power Reactors	53.0	1.7	86.5	−1.1	0.5
Spent Fuel Storage/Reactor Decommissioning	.....	.....	3.6	0.0	0.0
Research and Test Reactors	.....	.....	0.3	0.0	0.0
Fuel Facilities	37.0	1.2	5.2	−0.1	1.1
Materials Users	10.0	0.3	2.8	−0.0	0.3
Transportation	.....	.....	0.5	−0.0	0.0
Uranium Recovery	.....	.....	1.2	−0.0	0.0
Total	100.0	3.2	100.0	-1.3	1.9

Annual Fee Policy Change

The staff examined 10 CFR 171.15(a) regarding independent spent fuel storage installation (ISFSI) licenses and determined that the current regulations are inconsistent with how other classes of licensees are assessed annual fees based on operational status. Under 10 part 171.15(a), licensees for new nuclear reactors under 10 CFR part 52, ''Licenses, Certifications, and Approvals for Nuclear Power Plants,'' may not operate a facility and are not assessed annual fees until the Commission determines that the acceptance criteria in a combined license have been met as stated under 10 CFR 52.103(g). However, licensees under 10 CFR part 72, ''Licensing Requirements for the Independent Storage of Spent Nuclear Fuel and High-Level Radioactive Waste, and Reactor-Related Greater Than Class C Waste,'' that do not hold licenses under 10 CFR part 50, ''Domestic Licensing of Production and Utilization Facilities,'' or 10 CFR part 52, must pay an annual fee regardless of operational status. This creates a regulatory inconsistency because the NRC's current fee regulations fail to consider the Commission's requirement that 10 CFR part 72 licensees notify the Commission of their readiness to begin operations at least 90 days prior to the first storage of spent fuel, high-level waste, or reactor-related Greater than Class C waste in an ISFSI or a monitored retrievable storage installation.

In the cases of licensees under both 10 CFR part 72 and 10 CFR part 52, the Commission ultimately determines a licensee's operational status through

established criteria that either requires a licensee to notify the Commission of its readiness to operate or the Commission's finding that acceptance criteria in the combined license have been met before operation of a facility. The OBRA–90, as amended, requires the NRC to fairly and equitably recover the costs of providing regulatory services in its collection of fees from licensees. Therefore, the NRC modifies 10 CFR 171.15(a) to allow an ISFSI licensee to be charged an annual fee when the licensee has the ability to use or to derive benefit from the license—that is, when an ISFSI licensee notifies the Commission of its readiness to operate. This change mirrors the practice for licensees under the power reactor and fuel cycle facility fee categories.

Revised Annual Fees

The NRC is required to establish rebaselined annual fees, which includes updating the number of NRC licensees in the FY 2014 fee calculations. Therefore, the NRC is revising its annual fees in §§ 171.15 and 171.16 for FY 2014 to recover approximately 90 percent of the NRC's FY 2014 budget authority, less non-fee amounts and the estimated amount to be recovered through 10 CFR part 170 fees. The total estimated 10 CFR part 170 collections for this final rule total $332.5 million, a decrease of $15.5 million from the FY 2013 fee rule. The total amount to be recovered through annual fees from current licensees for this final rule is $584.2 million, an increase of $72.68 million from the FY 2013 final rule. The required annual fee collection in FY 2013 was $511.6 million.

In the agency's FY 2006 final fee rule (71 FR 30721; May 30, 2006), the Commission determined that the agency should proceed with a presumption in favor of rebaselining when calculating annual fees each year. Rebaselining involves a detailed analysis of the NRC's budget, with the NRC allocating budgeted resources to fee classes and categories of licensees. The Commission expects that for most years there will be budgetary and other changes that warrant the use of the rebaselining method.

For FY 2014, the NRC's total fee recoverable budget, as mandated by law, is $930.7 million, an increase of $66.8 million compared to FY 2013. The FY 2014 budget was allocated to the appropriate fee class based on budgeted activities. As compared with the FY 2013 annual fees, the FY 2014 rebaselined fees decrease for three classes—spent fuel storage/reactor and decommissioning, some fuel facilities, and DOE Transportation Activities. The annual fees increase for five fee classes—operating reactors, research and test reactors, most fuel facilities, materials users, and uranium recovery licensees.

The factors affecting all annual fees include the distribution of budgeted costs to the different classes of licenses (based on the specific activities the NRC will perform in FY 2014), the estimated 10 CFR part 170 collections for the various classes of licenses, and allocation of the fee-relief surplus adjustment to all fee classes. The percentage of the NRC's budget not subject to fee recovery remains at 10 percent for FY 2014, the same as FY 2013.

Table V shows the rebaselined fees for FY 2014 for a representative list of categories of licensees. The FY 2013 amounts are provided for comparison purposes. (Individual values may not sum to totals due to rounding.)

TABLE V—REBASELINED ANNUAL FEES

Class/category of licenses	FY 2013 final annual fee	FY 2014 final annual fee
Operating Power Reactors (Including Spent Fuel Storage/Reactor Decommissioning Annual Fee)	$4,390,000	$5,223,000
Spent Fuel Storage/Reactor Decommissioning	231,000	224,000
Research and Test Reactors (Nonpower Reactors)	81,600	84,500
High Enriched Uranium Fuel Facility	6,997,000	7,175,000
Low Enriched Uranium Fuel Facility	2,633,000	2,469,000
UF_6 Conversion and Deconversion Facility	1,429,000	1,466,000
Conventional Mills	27,900	33,800
Typical Materials Users:		
Radiographers (Category 3O)	27,200	29,800
Well Loggers (Category 5A)	12,600	13,600
Gauge Users (Category 3P)	6,400	6,800
Broad Scope Medical (Category 7B)	32,900	35,700

The work papers (ADAMS Accession No. ML14064A394) that support this final rule show in detail the allocation of the NRC's budgeted resources for each class of licenses and how the fees are calculated. The work papers are available as indicated in Section XV, ''Availability of Documents,'' of this document.

Paragraphs a. through h. of this section describes budgetary resources allocated to each class of licenses and the calculations of the rebaselined fees. Individual values in the tables presented in this section may not sum to totals due to rounding.

a. Fuel Facilities

The FY 2014 budgeted costs to be recovered in the annual fees assessment to the fuel facility class of licenses (which includes licensees in fee categories 1.A.(1)(a), 1.A.(1)(b), 1.A.(2)(a), 1.A.(2)(b), 1.A.(2)(c), 1.E., and 2.A.(1) under § 171.16) are approximately $29.5 million. This value is based on the full cost of budgeted resources associated with all activities that support this fee class, which is reduced by estimated 10 CFR part 170 collections and adjusted for allocated generic transportation resources and fee-relief. In FY 2014, the LLW surcharge for fuel facilities is added to the allocated fee-relief adjustment (see Table IV, ''Application of Fee-Relief Adjustment and LLW Surcharge, FY 2014,'' in Section II, ''Discussion,'' of this document). The summary calculations used to derive this value are presented in Table VI for FY 2014, with FY 2013 values shown for comparison. (Individual values may not sum to totals due to rounding.)

TABLE VI—ANNUAL FEE SUMMARY CALCULATIONS FOR FUEL FACILITIES

[Dollars in millions]

Summary fee calculations	FY 2013 Final	FY 2014 Final
Total budgeted resources	50.7	47.2
Less estimated 10 CFR part 170 receipts	−19.5	−16.7
Net 10 CFR part 171 resources	31.2	30.5
Allocated generic transportation	+0.8	0.6
Fee-relief adjustment/LLW surcharge	+0.9	1.1
Billing adjustments	−0.0	−0.6
Reclassification of licensee current year fee billing received:	0.0	−2.2
Total remaining required annual fee recovery	32.9	29.5

In comparison to FY 2013, the FY 2014 budgetary resources for fuel facilities decreased due to new construction project delays within the oversight process and reduced 10 CFR part 170 billings.

As a result of the NRC's approval to reclassify a fuel facility licensee (USEC Paducah) to another fee category, the remaining fuel facility licensees receive a $2.2 million credit adjustment of current year collections for FY 2014. The NRC allocates the total remaining annual fee recovery amount to the individual fuel facility licensees, based on the effort/fee determination matrix developed for the FY 1999 final fee rule (64 FR 31447; June 10, 1999). In the matrix included in the publicly-available NRC work papers, licensees are grouped into categories according to their licensed activities (i.e., nuclear material enrichment, processing operations, and material form) and the level, scope, depth of coverage, and rigor of generic regulatory programmatic effort applicable to each category from a safety and safeguards perspective. This methodology can be applied to determine fees for new licensees, current licensees, licensees in unique license situations, and certificate holders.

This methodology is adaptable to changes in the number of licensees or certificate holders, licensed or certified material and/or activities, and total programmatic resources to be recovered through annual fees. When a license or certificate is modified, it may result in a change of category for a particular fuel facility licensee, as a result of the methodology used in the fuel facility effort/fee matrix. Consequently, this change may also have an effect on the fees assessed to other fuel facility licensees and certificate holders. For example, if a fuel facility licensee amends its license/certificate (e.g., decommissioning or license termination) that results in it not being subject to 10 CFR part 171 costs applicable to the fee class, then the budgeted costs for the safety and/or safeguards components will be spread among the remaining fuel facility licensees/certificate holders.

The methodology is applied as follows. First, a fee category is assigned, based on the nuclear material and activity authorized by license or certificate. Although a licensee/certificate holder may elect not to fully use a license/certificate, the license/certificate is still used as the source for determining authorized nuclear material possession and use/activity. Second, the category and license/certificate information are used to determine where the licensee/certificate holder fits into the matrix. The matrix depicts the categorization of licensees/certificate holders by authorized material types and use/activities.

Each year, the NRC's fuel facility project managers and regulatory analysts determine the level of effort associated with regulating each of these facilities. This is done by assigning, for each fuel facility, separate effort factors for the safety and safeguards activities associated with each type of regulatory activity. The matrix includes 10 types of regulatory activities, including enrichment and scrap/waste-related activities (see the work papers for the complete list). Effort factors are assigned as follows: 1 (low regulatory effort), 5 (moderate regulatory effort), and 10 (high regulatory effort). The NRC then totals separate effort factors for safety and safeguards activities for each fee category.

The effort factors for the various fuel facility fee categories are summarized in Table VII. The value of the effort factors shown, as well as the percent of the total effort factor for all fuel facilities, reflects the total regulatory effort for each fee category (not per facility). This results in spreading of costs to other fee categories. The uranium enrichment fee category factors have shifted with minimal increases and decreases between safety and safeguards factors compared to FY 2013. However, as a result of the downgraded licensee, USEC Paducah, in May 2014, the effort factors changed significantly for the fee category 1.E., Uranium Enrichment, and slightly for fee category 1.A.(2)(a), Limited Operations, from the FY 2014 proposed and FY 2013 final rule.

TABLE VII—EFFORT FACTORS FOR FUEL FACILITIES, FY 2014

Facility type (fee category)	Number of facilities	Effort factors (percent of total)	
		Safety	Safeguards
High-Enriched Uranium Fuel (1.A.(1)(a))	2	89 (43.8)	97 (54.5)
Low-Enriched Uranium Fuel (1.A.(1)(b))	3	70 (34.5)	26 (14.6)
Limited Operations (1.A.(2)(a))	1	2 (1.0)	7 (3.9)
Gas Centrifuge Enrichment Demonstration (1.A.(2)(b))	1	3 (1.5)	15 (8.7)
Hot Cell (1.A.(2)(c))	1	6 (3.0)	3 (1.7)
Uranium Enrichment (1.E.)	1	21 (10.3)	23 (12.9)
UF_6 Conversion and Deconversion (2.A.(1))	1	12 (5.9)	7 (3.9)

For FY 2014, the total budgeted resources for safety activities are $16.2 million, excluding the fee-relief adjustment and the reclassification adjustment. This amount is allocated to each fee category based on its percent of the total regulatory effort for safety activities. For example, if the total effort factor for safety activities for all fuel facilities is 100, and the total effort factor for safety activities for a given fee category is 10, that fee category will be allocated 10 percent of the total budgeted resources for safety activities. Similarly, the budgeted resources amount of $14.3 million for safeguards activities is allocated to each fee category based on its percent of the total regulatory effort for safeguards activities. The fuel facility fee class' portion of the fee-relief adjustment, $1.1 million, is allocated to each fee category based on its percent of the total regulatory effort for both safety and safeguards activities. The annual fee per licensee is then calculated by dividing the total allocated budgeted resources for the fee category by the number of licensees in that fee category. The fee (rounded) for each facility is summarized in Table VIII.

TABLE VIII—ANNUAL FEES FOR FUEL FACILITIES

Facility type (fee category)	FY 2014 final annual fee
High-Enriched Uranium Fuel (1.A.(1)(a))	$7,175,000
Low-Enriched Uranium Fuel (1.A.(1)(b))	2,469,000
Limited Operations (1.A(2)(a))	747,000
Gas Centrifuge Enrichment Demonstration (1.A.(2)(b))	1,389,000
Hot Cell (and others) (1.A.(2)(c))	694,000
Uranium Enrichment (1.E.)	3,395,000
UF_6 Conversion and Deconversion (2.A.(1))	1,466,000

b. Uranium Recovery Facilities

The total FY 2014 budgeted costs to be recovered through annual fees assessed to the uranium recovery class (which includes licensees in fee categories 2.A.(2)(a), 2.A.(2)(b), 2.A.(2)(c), 2.A.(2)(d), 2.A.(2)(e), 2.A.(3), 2.A.(4), 2.A.(5), and 18.B. under § 171.16) are approximately $1.2 million. The derivation of this value is shown in Table IX, with FY 2013 values shown for comparison purposes.

TABLE IX—ANNUAL FEE SUMMARY CALCULATIONS FOR URANIUM RECOVERY FACILITIES

[Dollars in millions]

Summary fee calculations	FY 2013 final	FY 2014 final
Total budgeted resources	$9.9	$10.9
Less estimated 10 CFR part 170 receipts	*−8.9*	*−9.5*
Net 10 CFR part 171 resources	1.0	1.3
Allocated generic transportation	N/A	N/A
Fee-relief adjustment	−0.0	−0.0
Billing adjustments	*−0.0*	*−0.1*
Total required annual fee recovery	1.0	1.2

The increase in total budgeted resources and annual fees allocated to uranium recovery in FY 2014 is primarily due to an increase in environmental reviews, inspections, and licensing actions.

Since FY 2002, the NRC has computed the annual fee for the uranium recovery fee class by allocating the total annual fee amount for this fee class between the DOE and the other licensees in this fee class. The NRC regulates DOE's Title I and Title II activities under the Uranium Mill Tailings Radiation Control Act (UMTRCA). The Congress established the two programs, Title I and Title II, under UMTRCA to protect the public and the environment from uranium milling. The UMTRCA Title I program is for remedial action at abandoned mill tailings sites where tailings resulted largely from production of uranium for the weapons program. The NRC also regulates DOE's UMTRCA Title II program, which is directed toward uranium mill sites licensed by the NRC or Agreement States in or after 1978.

In FY 2014, the annual fee assessed to DOE includes recovery of the costs specifically budgeted for the NRC's UMTRCA Title I and II activities, plus 10 percent of the remaining annual fee amount, including generic/other costs (minus 10 percent of the fee-relief adjustment), for the uranium recovery class. The NRC assesses the remaining 90 percent generic/other costs minus 90 percent of the fee-relief adjustment, to the other NRC licensees in this fee class that are subject to annual fees.

The costs to be recovered through annual fees assessed to the uranium recovery class are shown in Table X.

TABLE X—COSTS RECOVERED THROUGH ANNUAL FEES; URANIUM RECOVERY FEE CLASS

Summary of costs	FY 2014 final annual fee
DOE Annual Fee Amount (UMTRCA Title I and Title II) General Licenses:	
UMTRCA Title I and Title II budgeted costs less 10 CFR part 170 receipts	$774,185
10 percent of generic/other uranium recovery budgeted costs	42,009

TABLE X—COSTS RECOVERED THROUGH ANNUAL FEES; URANIUM RECOVERY FEE CLASS—Continued

Summary of costs	FY 2014 final annual fee
10 percent of uranium recovery fee-relief adjustment	−1,554
Total Annual Fee Amount for DOE (rounded)	815,000
Annual Fee Amount for Other Uranium Recovery Licenses:	
90 percent of generic/other uranium recovery budgeted costs less the amounts specifically budgeted for Title I and Title II activities	378,082
90 percent of uranium recovery fee-relief adjustment	*−13,986*
Total Annual Fee Amount for Other Uranium Recovery Licenses	364,096

The DOE fee would increase by 16.4 percent in FY 2014 compared to FY 2013 due to increased budgetary resources for UMTRCA activities. Again, the annual fee for uranium recovery licensees increases due to environmental reviews, inspections, and licensing actions.

The NRC will continue to use a matrix, which is included in the work papers, to determine the level of effort associated with conducting the generic regulatory actions for the different (non-DOE) licensees in this fee class. The weights derived in this matrix are used to allocate the approximately $378,082 annual fee amount to these licensees. The use of this uranium recovery annual fee matrix was established in the FY 1995 final fee rule (60 FR 32217; June 20, 1995). The FY 2014 matrix is described as follows.

First, the methodology identifies the categories of licenses included in this fee class (besides DOE). These categories are: Conventional uranium mills and heap leach facilities; uranium *In Situ* Recovery (ISR) and resin ISR facilities mill tailings disposal facilities, as defined in Section 11e.(2) of the Atomic Energy Act (11e.(2) disposal facilities); and uranium water treatment facilities.

Second, the matrix identifies the types of operating activities that support and benefit these licensees. The activities related to generic decommissioning/reclamation are not included in the matrix because they are included in the fee-relief activities. Therefore, they are not a factor in determining annual fees. The activities included in the matrix are operations, waste operations, and groundwater protection. The relative weight of each type of activity is then determined, based on the regulatory resources associated with each activity. The operations, waste operations, and groundwater protection activities have weights of 0, 5, and 10, respectively, in the matrix.

Each year, the NRC determines the level of benefit to each licensee for generic uranium recovery program activities for each type of generic activity in the matrix. This is done by assigning, for each fee category, separate benefit factors for each type of regulatory activity in the matrix. Benefit factors are assigned on a scale of 0 to 10 as follows: 0 (no regulatory benefit), 5 (moderate regulatory benefit), and 10 (high regulatory benefit). These benefit factors are first multiplied by the relative weight assigned to each activity (described previously). The NRC then calculates total and per licensee benefit factors for each fee category. Therefore, these benefit factors reflect the relative regulatory benefit associated with each licensee and fee category.

Table XI displays the benefit factors per licensee and per fee category, for each of the non-DOE fee categories included in the uranium recovery fee class as follows:

TABLE XI—BENEFIT FACTORS FOR URANIUM RECOVERY LICENSES

Fee category	Number of licensees	Benefit factor per licensee	Total value	Benefit factor percent total
Conventional and Heap Leach mills (2.A.(2)(a))	1	150	150	9
Basic *In Situ* Recovery facilities (2.A.(2)(b))	6	190	1,140	71
Expanded *In Situ* Recovery facilities (2.A.(2)(c))	1	215	215	13
11e.(2) disposal incidental to existing tailings sites (2.A.(4))	1	85	85	5
Uranium water treatment (2.A.(5))	1	25	25	2
Total	10	665	1,615	100%

Applying these factors to the approximately $364,096 in budgeted costs to be recovered from non-DOE uranium recovery licensees results in the total annual fees for each fee category. The annual fee per licensee is calculated by dividing the total allocated budgeted resources for the fee category by the number of licensees in that fee category, as summarized in Table XII.

TABLE XII—ANNUAL FEES FOR URANIUM RECOVERY LICENSEES

[Other than DOE]

Facility type (fee category)	FY 2014 final annual fee
Conventional and Heap Leach mills (2.A.(2)(a))	$33,800
Basic *In Situ* Recovery facilities (2.A.(2)(b))	42,800
Expanded *In Situ* Recovery facilities (2.A.(2)(c))	48,500

TABLE XII—ANNUAL FEES FOR URANIUM RECOVERY LICENSEES—Continued

[Other than DOE]

Facility type (fee category)	FY 2014 final annual fee
11e.(2) disposal incidental to existing tailings sites (2.A.(4))	19,200
Uranium water treatment (2.A.(5))	5,600

c. Operating Power Reactors

The total budgeted costs to be recovered from the power reactor fee class in FY 2014 in the form of annual fees is $499.9 million, as shown in Table XIII. The FY 2013 values are shown for comparison. (Individual values may not sum to totals due to rounding.)

TABLE XIII—ANNUAL FEE SUMMARY CALCULATIONS FOR OPERATING POWER REACTORS

[Dollars in millions]

Summary fee calculations	FY 2013 final	FY 2014 final
Total budgeted resources	$734.7	$799.3
Less estimated 10 CFR part 170 receipts	−$303.8	−$290.9
Net 10 CFR part 171 resources	430.9	508.4
Allocated generic transportation	1.3	1.1
Fee-relief adjustment/LLW surcharge	−3.4	0.6
Billing adjustment	0.2	−10.2
2nd billing adjustment (terminated license)	−4.6	0.0
Total required annual fee recovery	424.2	499.9

The budgetary resources for operating power reactors primarily increase in FY 2014 due to increased resources to support Fukushima Near-Term Task Force (NTTF) recommendations (''Recommendations for Enhancing Reactor Safety in the 21st Century: The Near-Term Task Force Review of Insights from the Fukushima Dai-ichi Accident'' (ADAMS Accession No. ML111861807), dated July 12, 2011; Commission-directed high- and medium-priority rulemaking activities; the Force on Force program; and the maintenance, operation and eventual replacement of the Reactor Program System (RPS).

The annual fees for power reactors increase primarily as a result of: (1) Decreased 10 CFR part 170 billings due to the decline in current year licensing actions and delays in major design certification applications and combined license applications (this decline in 10 CFR part 170 billings means that 10 CFR part 171 fees need to increase to make up the difference and ensure that the NRC collects approximately 90 percent of its budget authority); (2) increased generic regulatory work related to domestic post-Fukushima regulatory actions and the development of the new waste confidence rule, which the NRC cannot bill to a specific licensee; and (3) the shutdown of two operating reactors (San Onofre Nuclear Generating Station, Units 2 and 3), which lowered the number of licensees in the power reactor annual fee class. The budgeted costs to be recovered through annual fees to power reactors are divided equally among the 100 power reactors licensed to operate, resulting in an FY 2014 annual fee of $4,999,000 per reactor. Additionally, each power reactor licensed to operate will be assessed the FY 2014 spent fuel storage/reactor decommissioning annual fee of $224,000. The total FY 2014 annual fee is $5,223,000 for each power reactor licensed to operate. The annual fees for power reactors are presented in § 171.15.

d. Spent Fuel Storage/Reactors in Decommissioning

For FY 2014, budgeted costs of $27.5 million for spent fuel storage/reactor decommissioning will be recovered through annual fees assessed to 10 CFR part 50 power reactors and to 10 CFR part 72 licensees who do not hold a 10 CFR part 50 license. Those reactor licensees that have ceased operations and have no fuel onsite will not be subject to these annual fees. Table XIV shows the calculation of this annual fee amount. The FY 2013 values are shown for comparison. (Individual values may not sum to totals due to rounding.)

TABLE XIV—ANNUAL FEE SUMMARY CALCULATIONS FOR THE SPENT FUEL STORAGE/REACTOR IN DECOMMISSIONING FEE CLASS

[Dollars in millions]

Summary fee calculations	FY 2013 final	FY 2014 final
Total budgeted resources	$33.4	$32.7
Less estimated 10 CFR part 170 receipts	−5.4	−5.4
Net 10 CFR part 171 resources	28.0	27.3
Allocated generic transportation	0.6	0.6

TABLE XIV—ANNUAL FEE SUMMARY CALCULATIONS FOR THE SPENT FUEL STORAGE/REACTOR IN DECOMMISSIONING FEE CLASS—Continued

[Dollars in millions]

Summary fee calculations	FY 2013 final	FY 2014 final
Fee-relief adjustment	−0.2	0.0
Billing adjustments	0.0	−0.4
Total required annual fee recovery	28.4	27.5

The budgetary resources for this fee class are reduced in FY 2014 due to a decline in activities related to Commission-directed improvements for storage and transportation regulations and processes. The required annual fee recovery amount is divided equally among 123 licensees, resulting in an FY 2014 annual fee of $224,000 per licensee.

e. Research and Test Reactors (Non-Power Reactors)

Approximately $340,000 in budgeted costs would be recovered through annual fees assessed to the test and research reactor class of licenses for FY 2014. Table XV summarizes the annual fee calculation for the research and test reactors for FY 2014. The FY 2013 values are shown for comparison. (Individual values may not sum to totals due to rounding.)

TABLE XV—ANNUAL FEE SUMMARY CALCULATIONS FOR RESEARCH AND TEST REACTORS

[Dollars in millions]

Summary fee calculations	FY 2013 final	FY 2014 final
Total budgeted resources	$1.50	$2.63
Less estimated 10 CFR part 170 receipts	−1.19	−2.28
Net 10 CFR part 171 resources	0.30	0.35
Allocated generic transportation	0.03	0.03
Fee-relief adjustment	−0.01	−0.01
Billing adjustments	−0.00	−0.03
Total required annual fee recovery	0.33	0.34

For FY 2014, budgetary resources for research and test reactors increase due to more emphasis on rulemaking activities to streamline license renewal processes. The required annual fee recovery amount is divided equally among the four research and test reactors subject to annual fees and results in an FY 2014 annual fee of $84,500 for each licensee.

f. Rare Earth Facilities

The agency does not anticipate receiving an application for a rare earth facility this fiscal year, so no budgeted resources are allocated to this fee class, and no annual fee will be published in FY 2014.

g. Materials Users

For FY 2014, budget costs of $33.1 million for materials users would be recovered through annual fees assessed to 10 CFR parts 30, 40, and 70 licensees. Table XVI shows the calculation of the FY 2014 annual fee amount for materials users licensees. The FY 2013 values are shown for comparison. Note the following fee categories under § 171.16 are included in this fee class: 1.C., 1.D., 1.F., 2.B., 2.C. through 2.F., 3.A. through 3.S., 4.A. through 4.C., 5.A., 5.B., 6.A., 7.A. through 7.C., 8.A., 9.A. through 9.D., and 17. (Individual values may not sum to totals due to rounding.)

TABLE XVI—ANNUAL FEE SUMMARY CALCULATIONS FOR MATERIALS USERS

[Dollars in millions]

Summary fee calculations	FY 2013 final	FY 2014 final
Total budgeted resources	$30.7	$32.8
Less estimated 10 CFR part 170 receipts	−1.2	−0.9
Net 10 CFR part 171 resources	29.5	31.9
Allocated generic transportation	1.5	1.3
Fee-relief adjustment/LLW surcharge	0.2	0.2
Billing adjustments	−0.0	−0.3
Total required annual fee recovery	31.2	33.1

The total required annual fees to be recovered for materials licensees increase in FY 2014 mainly for oversight activities. To equitably and fairly allocate the $33.1 million in FY 2014 budgeted costs to be recovered in annual fees assessed to the approximately 3,000 diverse materials users licensees, the NRC continues to base the annual fees for each fee category within this class on the 10 CFR part 170 application fees and estimated inspection costs for each fee category. Because the application fees and inspection costs are indicative of the complexity of the license, this approach continues to provide a proxy for allocating the generic and other regulatory costs to the diverse categories of licenses based on the NRC's cost to regulate each category. This fee calculation continues to consider the inspection frequency (priority), which is indicative of the safety risk and resulting regulatory costs associated with the categories of licenses.

The annual fee for these categories of materials users' licenses is developed as follows:

Annual fee = Constant × [Application Fee + (Average Inspection Cost/Inspection Priority)] + Inspection Multiplier × (Average Inspection Cost/Inspection Priority) + Unique Category Costs

The constant is the multiple necessary to recover approximately $23.8 million in general costs (including allocated generic transportation costs) and is 1.59 for FY 2014. The average inspection cost is the average inspection hours for each fee category multiplied by the hourly rate of $279. The inspection priority is the interval between routine inspections, expressed in years. The inspection multiplier is the multiple necessary to recover approximately $8.8 million in inspection costs, and is 2.4 for FY 2014. The unique category costs are any special costs that the NRC has budgeted for a specific category of licenses. For FY 2014, approximately $238,500 in budgeted costs for the implementation of revised 10 CFR part 35, ''Medical Use of Byproduct Material (unique costs),'' has been allocated to holders of NRC human-use licenses.

The annual fee to be assessed to each licensee also includes a share of the fee-relief assessment of approximately $34,000 allocated to the materials users fee class (see Table IV, ''Allocation of Fee-Relief Adjustment and LLW Surcharge, FY 2014,'' in Section II, ''Discussion,'' of this document), and for certain categories of these licensees, a share of the approximately $319,000 surcharge costs allocated to the fee class. The annual fee for each fee category is shown in § 171.16(d).

h. Transportation

Table XVII shows the calculation of the FY 2014 generic transportation budgeted resources to be recovered through annual fees. The FY 2013 values are shown for comparison. (Individual values may not sum to totals due to rounding.)

TABLE XVII—ANNUAL FEE SUMMARY CALCULATIONS FOR TRANSPORTATION

[Dollars in millions]

Summary fee calculations	FY 2013 final	FY 2014 final
Total budgeted resources	$8.2	$8.0
Less estimated 10 CFR part 170 receipts	−2.7	−3.1
Net 10 CFR part 171 resources	5.5	4.9

The NRC must approve any package used for shipping nuclear material before shipment. If the package meets NRC requirements, the NRC issues a Radioactive Material Package Certificate of Compliance (CoC) to the organization requesting approval of a package. Organizations are authorized to ship radioactive material in a package approved for use under the general licensing provisions of 10 CFR part 71, ''Packaging and Transportation of Radioactive Material.'' The resources associated with generic transportation activities are distributed to the license fee classes based on the number of CoCs benefitting (used by) that fee class, as a proxy for the generic transportation resources expended for each fee class.

The total FY 2014 budgetary resources for generic transportation activities, including those to support DOE CoCs, are $4.9 million. The decrease in 10 CFR part 171 resources in FY 2014 is primarily due to the winding down of 10 CFR parts 71 and 72 rulemaking activities and increased 10 CFR part 170 billing activities. Generic transportation resources associated with fee-exempt entities are not included in this total. These costs are included in the appropriate fee-relief category (e.g., the fee-relief category for nonprofit educational institutions).

Consistent with the policy established in the NRC's FY 2006 final fee rule (71 FR 30721; May 30, 2006), the NRC will recover generic transportation costs unrelated to DOE as part of existing annual fees for license fee classes. The NRC continues to assess a separate annual fee under § 171.16, fee category 18.A., for DOE transportation activities. The amount of the allocated generic resources is calculated by multiplying the percentage of total CoCs used by each fee class (and DOE) by the total generic transportation resources to be recovered.

The distribution of these resources to the license fee classes and DOE is shown in Table XVIII. The distribution is adjusted to account for the licensees in each fee class that are fee-exempt. For example, if four CoCs benefit the entire research and test reactor class, but only 4 of 31 research and test reactors are subject to annual fees, the number of CoCs used to determine the proportion of generic transportation resources allocated to research and test reactor annual fees equals (4/31) × 4, or 0.5 CoCs.

TABLE XVIII—DISTRIBUTION OF GENERIC TRANSPORTATION RESOURCES, FY 2014

[Dollars in millions]

License fee class/DOE	Number of CoCs benefiting fee class or DOE	Percentage of total CoCs	Allocated generic transportation resources
Total	85.5	100.0	$4.89
DOE	20.0	23.4	1.14
Operating Power Reactors	20.0	23.4	1.14
Spent Fuel Storage/Reactor Decommissioning	11.0	12.9	0.63
Research and Test Reactors	0.5	0.6	0.03
Fuel Facilities	11.0	12.9	0.63
Materials Users	23.0	26.9	1.32

The NRC assesses an annual fee to DOE based on the 10 CFR part 71 CoCs it holds and does not allocate these DOE-related resources to other licensees' annual fees, because these resources specifically support DOE. Note that DOE's annual fee includes a reduction for the fee-relief surplus adjustment (see Table IV, ''Allocation of Fee-Relief Adjustment and LLW Surcharge, FY 2014,'' in Section II, ''Discussion,'' of this document), resulting in a total annual fee of $1,084,000 for FY 2014. The annual fee decreases in FY 2014 are primarily due to the conclusion of 10 CFR parts 71 and 72 rulemaking activities and an increase in 10 CFR part 170 billings.

Administrative Changes

The NRC also makes the following nine administrative changes:

(1) *Amends the Definition for ''Research Reactor'' under 10 CFR 170.3, ''Definitions,'' to Correct Reference.* A final rule was published in the **Federal Register** on August 1, 1968 (33 FR 10924), that added 10 CFR part 170 to the *Code of Federal Regulations.* The definitions section was contained in § 170.3 and included the definitions for ''research reactor'' and ''testing facility.'' However, the definitions section also originally included paragraph designations of (a), (b), (c), etc. The definition for ''research reactor'' was paragraph (h) and referenced paragraph (m), which was the definition for ''testing facility.'' In a final rule published on May 23, 1990 (55 FR 21179), the paragraph designations were removed and the definitions placed in alphabetical order. However, the reference contained in the definition for ''research reactor'' was not corrected to refer to the definition for ''testing facility'' and not ''paragraph (m).'' Therefore, the NRC amends the definition for ''research reactor'' to remove the reference to paragraph (m), which no longer exists. The final definition correctly references the definition for ''testing facility.''

(2) *Deletes the Language under 10 CFR 170.12, ''Payment of Fees,'' Regarding Deferred Application Costs, Which is Not Applicable to the Current Fleet of Licensees.* The NRC staff recently queried the NRC's cost accounting system and determined current installment payment plans between the NRC and licensees have installment payment plan duration periods of up to 3 years in FY 2014, and current language regarding application costs deferred before August 9, 1991, is no longer applicable. Therefore, the NRC modifies paragraph (b)(3) and deletes paragraphs (b)(5), (b)(6), and (b)(7) of this section.

(3) *Amends the Language under 10 CFR 170.12, ''Payment of Fees,'' to Address Underpayment of Fees.* The NRC modifies 10 CFR 170.12 to include a provision to allow for the collection of any underpayment in fees resulting from an error by the NRC. This provision provides clarity to licensees that the NRC must collect fees resulting from billing errors to satisfy the requirements of OBRA–90, as amended.

(4) *Modifies the Language under 10 CFR 170.31, ''Schedule of Fees for Materials Licenses and Other Regulatory Services, Including Inspections, and Import and Export Licenses,'' to Avoid Duplicate Billing.* As currently written, the regulations in this section could allow licensees in certain fee categories to be charged duplicate fees for identical activities in similar fee categories. Therefore, the NRC modifies the descriptions for three fee categories in this section by adding footnotes for fee categories 2.B., 3.P., and 7.C. These footnotes provide an exemption from other fee category codes with identical activities associated with the license to avoid duplicate billing.

(5) *Adds a New Paragraph Regarding Filing Fee Exemption Requests.* The current placement of the language identifying the time period to file an exemption request under 10 CFR 171.11, ''Exemptions,'' implies that only one exemption criterion is subject to the filing period, when all exemption criteria are subject to the same filing period. Therefore, the NRC removes the language currently under paragraph (b) concerning the filing period for fee exemption requests and moves it to a new paragraph (a) to emphasize the time period is required for all exemption requests filed by licensees with the NRC. Current paragraphs (a), (b), (c), and (d) are redesignated as paragraphs (b), (c), (d), and (e), respectively.

(6) *Modifies the Language under 10 CFR 171.15, ''Annual Fees: Reactor Licenses and Spent Fuel Storage Reactor Licenses,'' to Correct the Types of Non-Power Reactors.* The NRC modifies the language under paragraphs (a) and (e) by replacing ''and'' with ''or'' to clarify that research reactors and test reactors are two types of non-power reactors.

(7) *Modifies the Language under 10 CFR 171.16, ''Annual Fees: Materials Licensees, Holders of Certificates of Compliance, Holders of Sealed Source and Device Registrations, Holders of Quality Assurance Program Approvals, and Government Agencies Licensed by the NRC,'' to Delete Footnote Reference.* Removes reference to footnote 5 (which indicates that there is no licensee under a particular fee category) for fee category 1.A.(2)(a) in paragraph (d) due to an existing licensee that was recently moved into this fee category.

(8) *Modifies the Language under 10 CFR 171.16, ''Annual Fees: Materials Licensees, Holders of Certificates of Compliance, Holders of Sealed Source and Device Registrations, Holders of Quality Assurance Program Approvals, and Government Agencies Licensed by the NRC,'' to Avoid Duplicate Billing.* As currently written, the regulations in this section could allow licensees in certain fee categories to be charged duplicate fees for identical activities in similar fee categories. Therefore, the NRC modifies the descriptions for three fee categories in this section by adding footnotes for fee categories 2.B., 3.P., and 7.C. These footnotes provide an exemption from other fee category codes that have

identical activities associated with the license to avoid duplicate billing.

(9) *Amends the Language under 10 CFR 171.19, ''Payment,'' to Address Underpayment of Fees.* The NRC modifies 10 CFR 171.19 to include a provision to allow for the collection of any underpayment in fees resulting from an error by the NRC. This provision provides clarity to licensees that the NRC must collect fees resulting from billing errors to satisfy the requirements of OBRA–90, as amended.

FY 2014 Billing

The FY 2014 final fee rule is a major rule as defined by the Congressional Review Act of 1996 (5 U.S.C. 801–808). Therefore, the NRC's fee schedules for FY 2014 will become effective 60 days after date of publication of the final rule in the **Federal Register**. Upon publication of the final rule, the NRC will send an invoice for the amount of the annual fees to reactor licensees, 10 CFR part 72 licensees, major fuel cycle facilities, and other licensees with annual fees of $100,000 or more. For these licensees, payment is due on the effective date of the FY 2014 final rule. Because these licensees are billed quarterly, the payment amount due is the total FY 2014 annual fee less payments made in the first three quarters of the fiscal year.

Materials licensees with annual fees of less than $100,000 are billed annually. Those materials licensees whose license anniversary date during FY 2014 falls before the effective date of the FY 2014 final rule will be billed for the annual fee during the anniversary month of the license at the FY 2013 annual fee rate. Those materials licensees whose license anniversary date falls on or after the effective date of the FY 2014 final rule will be billed for the annual fee at the FY 2014 annual fee rate during the anniversary month of the license, and payment will be due on the date of the invoice.

III. Opportunities for Public Participation

The NRC published the FY 2014 Proposed Fee Rule in the **Federal Register** on April 14, 2014 (79 FR 21036), for a 30-day public comment period. The rule proposed to amend the licensing, inspection, and annual fees charged to the NRC's applicants and licensees in order to implement OBRA–90, as amended, which requires the NRC to recover through fees approximately 90 percent of its budget authority in FY 2014, not including amounts appropriated for WIR, amounts appropriated for generic homeland security activities, and IG services for the DNFSB. These fees represent the cost of the NRC's services provided to applicants and licensees. The public comment period for the proposed rule closed on May 14, 2014.

IV. Public Comment Analysis

Overview of Public Comments

The NRC received 20 comment submissions, including one duplicate submission, for the proposed rule. A comment submission means a communication or document submitted to the NRC by an individual or entity, with one or more distinct comments addressing a subject or an issue. A comment, on the other hand, refers to a statement made in the submission addressing a subject or issue. Seven of the comment submissions were received after the 30-day comment period closed, and the NRC has addressed all seven of the late-filed comment submissions as part of this final rule.

All 20 commenters are opposed to the hourly rate increase and the fee increases in the FY 2014 Proposed Fee Rule. The primary concern for the majority of the commenters is that the FY 2014 Proposed Fee Rule lacked adequate justification to support an increase in fees and the hourly rate, denying the public an opportunity to submit meaningful commentary for consideration in the FY 2014 Final Fee Rule. The commenters are listed in Table XIX, and are classified as follows: One private citizen (John Public); one government agency (DOE); three members of the uranium industry (Kennecott Uranium Company, National Mining Association (NMA), and Wyoming Mining Association (WMA)); three utilities (Florida Power & Light Company (FPLC), PPL Susquehanna, LLC, and South Carolina Electric and Gas Company (SCEG–1 and SCEG–2)); one materials licensee (Indiana University Medical Center (IU/Medical Center); and nine members of the nuclear industry (Dominion Resources Services, Inc. (Dominion), Duke Energy (Duke), Exelon Generation, LLC (Exelon), FirstEnergy Nuclear Operating Company (FENOC), Luminant Generation Company, LLC (Luminant Power), NAC International (NAC), Nuclear Energy Institute (NEI), Public Service Enterprise Group Nuclear, LLC (PSEG), and STARS Alliance).

TABLE XIX—FY 2014 PROPOSED FEE RULE COMMENTER SUBMISSIONS

Commenter	Affiliation	ADAMS ML #	Acronym
Mack L. Richard	Indiana University, Medical Center	ML14106A340 (#1)	IU/Medical Center.
John Public	N/A	ML14118A245 (#2)	Private Citizen.
Michael Pacilio	President and Chief Nuclear Officer, Exelon Generation Company, LLC.	ML14132A374 (#3)	Exelon.
Anthony R. Pietrangelo	Senior Vice President and Chief Nuclear Officer, Nuclear Generation, Nuclear Energy Institute.	ML14133A245 (#4)	NEI.
Travis Deti	Assistant Director, Wyoming Mining Association	ML14133A694 (#5)	WMA.
James M. Petro, Jr.	Nuclear Licensing and Regulatory Compliance Director, Florida Power & Light Company.	ML14134A467 (#6)	FPLC.
Gregory H. Hanlon	FENOC Director, Fleet Regulatory Affairs, FirstEnergy Nuclear Operating Company.	ML14134A519 (#7)	FENOC.
Jon A. Franke	Site Vice President, PPL Susquehanna, LLC	ML14134A529 (#8)	PPL Susquehanna.
Alfred M. Paglia	Manager, Nuclear Licensing, New Nuclear Deployment, South Carolina Electric and Gas Company.	ML14134A582 (#9)	SCEG–1.
Oscar Paulson	Facility Supervisor, Kennecott Uranium Company	ML14134A601 (#10)	Kennecott Uranium Company.
Travis Deti	Assistant Director, Wyoming Mining Association	ML14135A328 (#11)	WMA.
Thomas D. Gatlin	Vice President, Nuclear Operations, South Carolina Electric and Gas Company.	ML14135A332 (#12)	SCEG–2.
Robert Braun	Senior Vice President and Chief Operating Officer, PSEG Nuclear LLC.	ML14135A336 (#13)	PSEG.
Katie Sweeney	National Mining Association	ML14135A344 (#14)	NMA.
Scott A. Bauer	Regulatory Affairs Functional Area Manager, STARS Alliance LLC.	ML14135A354 (#15)	STARS Alliance, LLC.

TABLE XIX—FY 2014 PROPOSED FEE RULE COMMENTER SUBMISSIONS—Continued

Commenter	Affiliation	ADAMS ML #	Acronym
Thomas R. Huber	Director, Nuclear Licensing and Operations Support, Dominion Resources Services, Inc.	ML14135A547 (#16)	Dominion.
Tony L. Patko	Director, Licensing, NAC International, Inc	ML14136A318 (#17)	NAC.
Thomas C. Pauling	Director, Office of Site Operations, Office of Legacy Management, U.S. Department of Energy.	ML14148A454 (#18)	DOE.
Benjamin C. Waldrep	Duke Energy	ML14148A469 (#19)	Duke.
Fred W. Madden	Director, External Affairs, Luminant Generation Company LLC (Luminant Power).	ML14160B112 (#20)	Luminant Power.

Information about obtaining the comment submissions is available in Section XV, ''Availability of Documents,'' of this document.

Public Comments and Overall NRC Responses

The NRC has carefully considered the public comments received. The comments have been organized by topic followed by the NRC response.

A. Inadequate Explanation and Transparency

1. Uranium Recovery

Comment: The FY 2014 Proposed Fee Rule does not provide any details regarding how the FY 2014 rebaselining effort resulted in a 21 percent increase in the annual fees for uranium recovery licensees. (WMA)

Response: The NRC disagrees with the comment. The NRC established the rebaselined methodology for calculating annual fees through public notice and comment rulemaking in the FY 1999 fee rule (64 FR 31448; June 10, 1999), determining that base annual fees will be re-established (i.e., rebaselined) at every third year, and more frequently, if there is a substantial change in the total NRC budget or in the magnitude of the budget allocated to a specific class of licenses. The NRC staff allocates the total budget resources for uranium recovery facilities to individual uranium recovery fee categories in accordance with the effort/benefit fee determination matrix developed for the FY 1995 final fee rule (60 FR 32217; June 20, 1995). The NRC uses this matrix to determine the level of effort associated with conducting the generic regulatory actions for the different (non-DOE) licensees in the uranium recovery fee class.

The FY 2014 Proposed Fee Rule described the methodology used by the NRC staff to determine the annual fees for uranium recovery facilities. In addition, Tables IX through XII of the proposed rule show the application of the NRC's rebaselining methodology. The supporting work papers for the fee calculations are publicly available and were referenced in the proposed rule. The work papers provided detail on the FTE and contract resources for each product activity that were allocated to uranium recovery fee class. The work papers also provided information on all the values of the effort/benefit factors used in the uranium recovery matrix for FY 2014. No change was made to the final rule in response to this comment.

2. Operating Reactor Fees

Comment: The increase in hourly rates charged under 10 CFR part 170 to $279 is not adequately explained and does not appear justified. The increase is due primarily to a higher overall budget in combination with a decrease in the number of mission-direct FTEs. The commenter believes this increase is unjustified and that hourly fees should be held constant at the FY 2013 level of $272 through a combination of process efficiencies, an increase in mission-direct FTE, and meaningful prioritization and closure of regulatory matters. (NEI)

Response: The NRC disagrees with the comment that the basis for the hourly rate is not adequately explained and that the hourly rate should remain constant at $272. The NRC discussed the process for calculating the hourly rate in the proposed rule's Hourly Rate section, and the process is also summarized in this final rule. The hourly rate is derived by dividing the sum of recoverable budgeted resources for: (1) Mission-direct program salaries and benefits; (2) mission-indirect program support; and (3) agency corporate support and the IG, by mission-direct FTE hours. The mission-direct FTE hours are the product of the mission-direct FTE multiplied by the hours per direct FTE. For FY 2014, the NRC is unable to the keep the hourly rate constant because most of the components used to calculate the hourly rate are dependent on the NRC's FY 2014 appropriation. Because the NRC's FY 2014 appropriation increased from FY 2013, the allocation of our budgetary resources through the various NRC programs also changed in FY 2014; therefore, this change is reflected in the components used to calculate the hourly rate, and results in an increase in the hourly rate from $272 to $279. No change was made to the final rule in response to this comment.

Comment: The 21.4 percent operating reactor increase in fees from FY 2013 to FY 2014 is not warranted and places an unacceptable burden upon electric customers who then have to pay higher electricity rates. The NRC should be restricted to increases that do not exceed cost of living increases and be required to make cost reductions as needed to balance their books. (John Public)

Response: The operating reactor fee increase is warranted because the NRC's fees are based on its annual appropriations. The NRC's budget authority for FY 2014 is $1,055.9 million, an increase of $70.3 million from FY 2013. The OBRA–90 (codified at 42 U.S.C. 2214), as amended, requires the NRC to collect an amount that approximates 90 percent of its budget authority through annual fees. For FY 2014, the operating reactor annual fee increase is due to increases from the previous year's budget, reductions in the estimated amount of 10 CFR part 170 billings, and a decrease in the number of operating reactors. The 10 CFR part 170 estimated billings are reduced due to a decline in current year licensing actions and delays in five major applications for design certification and combined operating licenses. Because of the shutdown of the SONGS, Units 2 and 3, power reactors in FY 2013, the operating reactors budget must be spread amongst fewer operating reactors, thereby increasing the share of the annual fee per operating reactor. Further in FY 2013, there was a one-time, prior-period collection resulting in an increase of $20.9 million in collections of fees for services (10 CFR part 170), which resulted in a one-time reduction in annual fees. Approximately 21 percent of the increase in annual fees between FY 2013 and FY 2014 is due to that one-time adjustment.

Finally, the NRC cannot restrict license fee increases to the cost of living increases as measured by the Consumer Price Index or any other price index because OBRA–90, as amended, requires the NRC to collect an amount that approximates 90 percent of its budget authority in the fiscal year. No change was made to the final rule in response to this comment.

Comment: The proposed fee rule and work papers do not provide sufficient detail on how the 10 CFR parts 170 and 171 operating reactor fee estimates were calculated, denying the public meaningful opportunity to comment and rendering the proposed fee rule arbitrary and capricious. Neither the proposed rule nor the work papers provide any information showing the specific costs that are being recovered through annual fees. The work papers merely list all items comprising the entire NRC budgeted resources for new reactors, operating reactors, and unexplained materials licensing activities and derive the annual fee by subtracting the portion of estimated 10 CFR part 170 collections attributed to entities paying user fees ($280.5 million).

As a consequence, it is impossible to determine which of the specific line items are being recovered through user fees and which are being recovered under annual fees. The descriptions of the line items are very vague, preventing one from determining whether they are generic, and potentially appropriate for recovery under 10 CFR part 171, or attributable to a service provided to an identifiable beneficiary, and therefore, appropriate for recovery under 10 CFR part 170. (Exelon)

Response: The NRC disagrees with the comment that the work papers are too vague. Consistent with prior years, license fees are based on the NRC's budget formulation structure hierarchy of business lines, product lines, and products. The NRC provides those business lines, product lines, and products in its work papers. Detailed information below the product level (e.g. cost centers) is determined when the budget is executed. The work papers do not distinguish by specific budget line items which fees are recovered through user and annual fees because it is impractical for the NRC to determine in advance what precise percent of a given business line will be recovered through 10 CFR part 170 user fees versus 10 CFR part 171 annual fees. No change was made to the final rule in response to this comment; however, the NRC is open to input for improving transparency in the FY 2015 fee rule package.

Comment: The FY 2014 Proposed Fee Rule does not provide a description of the specific work that the NRC FTEs will complete during the 1375 hours allotted, only that the NRC will bill licensees that amount of hours to meet the budget. The NRC should provide an estimate of the specific work that will be completed and assessed under 10 CFR parts 170 and 171 for each licensee. (Kennecott Uranium Company)

Response: The NRC disagrees with the comment. The NRC presumes that ''specific work'' means a detailed description or an itemization of the work to be performed by NRC FTEs during the allotted 1375 hours of the fiscal year. Neither the applicable regulations in 10 CFR parts 170 and 171 nor the Administrative Procedure Act require that level of detail for the proposed fee rule. Such a detailed or itemized description is not cost-effective, and it would not result in a reduction of fees. Further, with respect to 10 CFR part 170 fees, licensing and inspection actions may be difficult to prioritize in advance and the amount of time spent on any particular licensing or inspection action may vary considerably, depending on the novelty and complexity of the license application under review or the facility being inspected. Similarly, with respect to 10 CFR part 171 annual fees, the nature of the generic research, safety, environmental, or safeguards activities that apply to materials licenses, may also vary considerably, given changes in Commission priorities, external events, interactions with Agreement States, other Federal agencies, state, local and tribal governments, the regulated industry, and members of the public. No change was made to the final rule in response to this comment.

Comment: The proposed rule and the work papers do not state how the estimated $324.5 million in 10 CFR part 170 costs are calculated for licensees. (Exelon)

Response: The NRC estimates the amount of 10 CFR part 170 fees based on established fee methodology guidelines (42 FR 22149; May 2, 1977), which specified that the NRC has the authority to recover the full cost of providing services to identifiable beneficiaries. As in previous years, the NRC applied longstanding principles to calculate the 10 CFR part 170 estimates based on the analysis of financial data. The data analyzed included: (1) Four quarters of the most recent billing data (hourly rate invoice data); (2) actual contractual work charged (prior period data) to develop contract work estimates; and (3) the number of FTE hours charged, multiplied by the NRC professional hourly rate. These factors, along with work load projections, are used by the NRC to determine the 10 CFR part 170 estimated charges. Because the fee calculation worksheets used to develop the 10 CFR part 170 estimates involve thousands of calculations, it would be impractical for the NRC to provide details on every calculation, let alone explanations for every calculation such that each individual calculation became accessible and understandable to members of the public. No change was made to the final rule in response to this comment.

Comment: The work papers allocate to operating reactors certain budgeted resources for the business lines pertaining to fuel facilities, nuclear materials users, and decommissioning and low-level waste. There is no explanation of how these activities apply to operating reactors. The line items under these business lines with amounts allocated to operating reactors relate predominantly to training. If there are not direct program support activities allocable to operating reactors under these business lines, it is unclear how there can be training costs allocable to reactors. (NEI)

Response: Although the work papers provide adequate detail for the purpose of the fees, the NRC will explore opportunities to provide greater transparency for our stakeholders and licensees. The costs described under the fuel facilities, nuclear materials users, and decommissioning and low-level waste categories are for things such as (but not limited to) generic low-level waste disposal, dosimeter, and high-level/spent fuel disposal costs.

Comment: The work papers allocate to operating reactors over $10 million for SFST. As there is no meaningful description, one cannot determine whether the allocated costs are attributable solely to the Waste Confidence rulemaking or include other activities as well. The $10 million is in addition to the $27.5 million for spent fuel storage and decommissioning activities recovered through an annual fee on power reactors and 10 CFR part 72 licensees that do not hold a 10 CFR part 50 license. The NRC should inform the operating reactors whether the SFST costs assessed to operating reactors includes activities pertaining to spent fuel disposal activities listed in the FY 2014 CBJ. These costs should be counted separately or be an offset from the carry-over appropriation relating to the review of Yucca Mountain license application or recovered through user fees assessed to DOE or the NWF. The NRC should also provide a detailed

breakdown of the annual fee for SFST costs by specifying any amounts that are attributable to spent fuel disposal activities for long-term storage attributable to the DOE's failure to meet its contractual obligations. Any activities relating to DOE's obligations under the Nuclear Waste Policy Act should either be offset by the carry-over appropriation from the NWF or recovered from DOE through a user fee. (Exelon)

Response: A small portion of the operating reactors' fees include SFST business line activities pertaining to analysis, data collection, modeling future alternate strategies for disposal of spent fuel and high-level waste, and monitoring national-level developments stemming from the report of the Blue Ribbon Commission on America's Nuclear Future and DOE's response to that report. Beginning in FY 2011, the NRC began budgeting for potential alternatives for the ultimate geological disposal of spent nuclear fuel, which was driven by the recognition of DOE's intent not to pursue the proposed repository at Yucca Mountain. At that time, the NRC determined that it was appropriate to include these SFST resources in the power reactors fee class because power reactors ultimately benefit from disposal of spent nuclear fuel. The user fees assessed to DOE are specifically for DOE's transportation and uranium recovery activities, and are not related to the ultimate disposal of spent nuclear fuel. Further, it is neither feasible nor appropriate for the NRC to parse out fees for activities that might be attributable to DOE's contractual obligations with respect to spent fuel versus those fees that would have been borne by licensees even if DOE had performed. Finally, with respect to offsetting fees from the carryover appropriations relating to the review of the Yucca Mountain license application or recovering costs through user fees assessed to the NWF, the NRC disagrees with the comment. Funds appropriated from the NWF may only be used for activities prescribed in Section 302(d) of the Nuclear Waste Policy Act, which includes licensing activities associated with the Yucca Mountain high-level waste repository. That section covers neither the NRC's work on future alternative strategies for disposal of high-level waste, nor monitoring national-level developments stemming from the report of the Blue Ribbon Commission. Therefore, these activities are not chargeable to NWF appropriations. No change was made to the final rule in response to this comment.

B. Fairness of Fees

Comment: The increase in operating power reactor fees is significant and problematic, particularly since it is being noticed well after licensee budgets for the year have been established. The problem is compounded due to the fact that the FY 2014 Proposed Fee Rule is being issued one month later than the historical practice, and the fourth quarter billing adjustment will impose an increase of $1 million per reactor than in previous quarters. (NEI)

Response: The NRC recognizes that the increase in fees will have a significant impact on licensee budgets. However, the NRC cannot schedule its assessment of generic activities to coincide with licensee budget planning. The OBRA–90 requires that the NRC collect an amount that approximates 90 percent of its budget authority through fees by the end of the fiscal year, and the NRC must set its fees in accordance with its own budget. The budget is established by Congress on a schedule that the NRC does not control. No change was made to the final rule in response to this comment.

Comment: The proposed fee rule fails to subtract from the NRC budget the cost of activities that are covered by appropriations and carry-over appropriations from the NWF. (Exelon)

Response: The NRC disagrees with the comment. The NRC's FY 2014 activities related to review of the Yucca Mountain high-level waste repository are being charged to the carryover balance of the NRC's NWF appropriations from prior years and will not be billed to licensees. The OBRA–90, as amended, specifies that the NRC must deduct from the annual charges collected from all licensees any ''amounts appropriated to the Commission from the Nuclear Waste Fund *for the fiscal year.''* 42 U.S.C. 2214(c)(2)(A)(ii) (emphasis added). But in FY 2014, the NRC did not receive any new appropriations from the NWF. Therefore, there was no NWF amount to subtract from the budget in calculating FY 2014 annual fees; all the carryover money that the NRC is using in FY 2014 was already deducted during the years in which it was appropriated. No change was made to the final rule in response to this comment.

Comment: The proposed fee rule fails to recover user fees from every person who receives a service or thing of value the full cost of such service or thing of value. Of the $930 million that the Commission must recover through fees, only $324.5 million is estimated to be recovered through 10 CFR part 170 user fees. This could be correct only if approximately two-thirds of the NRC's budget does not benefit any identifiable entity, which is presumed not the case. As an example, user fees do not appear to be imposed for vendor inspections despite the fact that vendors are identifiable persons receiving the benefit of NRC inspections to establish their qualifications to provide safety-related services. Also, the costs for advanced reactor research should be recovered through user fees charged to applicants or pre-applicants. (Exelon)

Response: Initially, the NRC notes that the comment is outside of the scope of the proposed fee rule. As proposed, the rule would simply amend the licensing, inspection, and annual fees charged to the applicants and licensees currently subject to the NRC's fee rules for FY 2014. The NRC does not charge nuclear industry vendors user fees. Establishing vendors as a new recipient of user fees would require the NRC to revise its existing 10 CFR part 171 regulations. The NRC process for initiating a rulemaking to consider such a change is included under 10 CFR 2.802, ''Petition for Rulemaking.''

That being said, the NRC notes that NRC licensees are ultimately responsible for ensuring the acceptability of the items and services they receive from vendors. The NRC's vendor inspections are intended to provide an additional level of safety, not to relieve the applicant or licensee of its responsibility for providing vendor oversight. As for the costs associated with advanced reactor research, these are, by their nature, generic costs that the NRC cannot charge to a specific applicant or pre-applicant. No changes will be made to the final rule as a result of this comment.

Comment: The NRC should consider imposing an annual fee for activities on holders of design certifications, design approvals and manufacturing licenses, licensees that hold or have active applications for combined licenses, and holders of active construction permits. Because OBRA–90 authorizes annual charges collected from ''licensees and certificate holders'' under 42 U.S.C. 2214(c), the NRC should define a new reactor licensee for the purpose of the fee rule to include holders of design certifications, design approvals or any other approvals. This would impose new reactor costs on those entities that have the closest relationship to the regulatory services being provided and would be the most fair and equitable allocation. Many operating reactor licenses are not pursuing any new reactor licensing applications; therefore, the NRC is not fairly allocating fees to the new reactor applicants that directly benefit from NRC new reactor activities

as required by OBRA–90. If the NRC is unable to recover the full amount of its new reactor costs through user fees, then the NRC should define a new, more focused class of licensees that should be assessed the annual fee needed to collect the remainder of these fees. (Exelon)

Response: Initially, the NRC notes that the comment is outside of the scope of the proposed fee rule. As proposed, the rule would simply amend the licensing, inspection, and annual fees charged to the applicants and licensees currently subject to the NRC's fee rules for FY 2014. Establishing a new class to capture new reactor activities would require the NRC to completely overhaul its existing 10 CFR part 171 regulations. The NRC process for initiating a rulemaking to consider such a change is included under 10 CFR 2.802, ''Petition for Rulemaking.''

That being said, the NRC disagrees with the comment that the proposed FY 2014 fee rule violates OBRA–90. To the extent that the NRC's reactor safety work directly benefits a licensee or applicant, then the NRC assesses 10 CFR part 170 user fees upon that licensee or applicant. As a result, existing operating reactor licensees are not paying any fees for new reactor work that directly benefits an entity engaged in new reactor activities. As for the portion of the new reactor work that is not collected through 10 CFR part 170 user fees, OBRA–90, as amended, requires that the NRC allocate those costs of this work fairly and equitably. Because the NRC's generic new reactor work yields indirect benefits for existing operating reactor licensees, the NRC's current system of allocating all operating reactor costs to existing licensees satisfies OBRA–90's requirements.

The NRC generic work prompted by new reactor applications benefits operating reactor licensees in several ways. First, regulations and guidance that are on their face directed at future nuclear power plants reactors may also benefit existing reactor licensees. For example, if an existing licensee sought to obtain NRC approval for a design change to a safety significant structure at an operating plant, then the NRC may use guidance that was developed for new reactor applications to analyze the design change. As a specific example, the regulatory guidance developed to support the review of seismic and flooding issues for new reactors has informed the review of Fukushima NTTF Recommendation 2.1 for current operating plants. This is just one example of how the distinction between new reactor work and operating reactor work is less rigid than the comment implies.

Second, entities holding licenses for currently operating reactors may also be, either now or in the future, applicants for new nuclear power plant licenses. Given the evolving nature of the new reactor landscape, the NRC concludes that there is no practicable or reliable method to determine which existing NRC licensees will develop an interest in future reactor activities.

Third, all power plant licensees indirectly benefit from rulemaking or other generic activities that enhance and develop the new reactor licensing framework because these generic activities help to establish and maintain the regulatory infrastructure at the NRC. This provides existing nuclear reactor licensees with regulatory predictability that is useful for business planning purposes. Along those lines, the NRC performs generic activities related to license renewal. These costs are spread among all holders of power reactor operating licenses without regard to whether the operating license holder intends to seek renewal. This is because a stable and efficient regulatory regime for license renewal indirectly benefits all existing power plants even if an existing power reactor has no immediate plans to seek license renewal. The same is true for new reactor licensing.

Ultimately, identification of fee classes is a matter of drawing practical distinctions. By virtue of being a generic activity without a specific, concrete beneficiary, all the activities that fall in the 10 CFR part 171 annual fee category could be theoretically parsed into an almost infinite amount of fee classes. For example, if the NRC were to base fees on distinctions such as whether generic work benefited boiling-water reactors versus pressurized-water reactors or coastal versus inland reactors, the exercise would result in distinctions that are both artificial and unduly burdensome from an administrative and recordkeeping standpoint. Therefore, the NRC's decision to draw the fee class line in such a way that encompasses generic new reactor work satisfies OBRA–90's requirement that costs be allocated fairly and that, ''[t]o the maximum extent practicable, the charges shall have a reasonable relationship to the cost of providing regulatory services.'' No change was made to the final rule in response to this comment.

Comment: The annual fee for operating reactors should not be assessed solely on the 100 current operating licensees licensed under 10 CFR part 50, but should also include holders of combined licenses (COLs) under 10 CFR part 52. The NRC generic activities for operating reactors, such as Fukushima NTTF activities, benefit 10 CFR part 52 combined license holders as much as 10 CFR part 50 operating licensees. Assigning costs only to 10 CFR part 50 operating licenses is inequitable, particularly because the current COL holders are far better positioned to recover these costs than many current operating licensees because they remain electric utilities able to recover costs through rates and regulatory costs during construction are largely capitalized. (Exelon)

Response: Initially, the NRC notes that the comment is outside of the scope of the proposed fee rule. As proposed, the rule would simply amend the licensing, inspection, and annual fees charged to the applicants and licensees currently subject to the NRC's fee rules for FY 2014. Enlarging the annual fee class for operating reactors to include COL holders would require the NRC to completely overhaul its existing 10 CFR part 171 regulations. The NRC process for initiating a rulemaking to consider such a change is included under 10 CFR 2.802, ''Petition for Rulemaking.''

That being said, the NRC disagrees with the proposed recommendation. Historically, plants licensed under 10 CFR part 50 did not enter into the fee class of operating plants until permission was granted by the NRC to load fuel and begin power operation. Although combined license holders under 10 CFR part 52 do hold an operating license, they do not approach a comparable status to plants licensed under 10 CFR part 50 until the Commission determines that the inspections, tests, analyses, and acceptance criteria are satisfied (10 CFR 52.103(g) finding) and all operational programs are functional and program compliance with regulations demonstrated. Therefore, the NRC believes that fairness concerns dictate that the NRC should not charge COL holders the same fees as operating plants during their construction and pre-operation phases. No change was made to the final rule in response to this comment.

C. Other Issues

Comment: Fukushima NTTF Tier 1 and Tier 2 actions transition from generic activities (10 CFR part 171) to site specific activities (10 CFR part 170), and as Fukushima-related rulemakings are finalized, the NRC should restore greater balance in the distribution of fee-for-service and annual fee costs. (NEI)

Response: The NRC learned many lessons from Fukushima, some of which were immediately implemented at sites

through orders and requests for information, and some of which required further policy development and technical study (rulemakings, spent fuel pool impacts). As the NRC completes generic regulatory actions (e.g., rulemakings) which resulted from the Fukushima NTTF report, the costs related to those actions will decline. And as the affected licensees and certificate holders implement the regulatory actions, follow-on activities will likely result in site-specific action on the part of the NRC. This shift in activities will likely cause an increase in fees for site specific activities (10 CFR part 170) the costs related to site-specific actions to increase for that workload. These changes in costs can be reflected in the fee basis. However, many generic regulatory actions that resulted from the Fukushima NTTF report are still in progress and the current cost distribution reflects that workload. No change was made to the final rule in response to this comment.

Comment: One commenter stated that the FY 2014 proposed increase in annual fees and hourly rates for operating reactors will result in unplanned regulatory expenses approaching $4,000,000 and may impact already planned activities, and could result in the deferral of planned improvements enhancing safety. (FENOC)

Response: The NRC recognizes that the increase in fees will have a significant impact on licensee budgets. However, the NRC cannot schedule its rulemaking process to coincide with licensee budget planning. The NRC expects licensees to comply with all safety requirements, notwithstanding fluctuations in revenues and expenses. No change was made to the final rule in response to this comment.

Comment: The NRC should provide relief if licensees elect to combine licenses under fee categories 7.A. and 7.B., since there would be an administrative cost savings to the NRC and institutions. The NRC should maintain the annual fee for category 7.B., as it is the broad medical license which drives most of the radiation safety program (e.g., administrative processes, approval of authorized users, review of incidents, etc.), and reduce the annual fee for fee category 7.A. by at least 50 percent. This would provide an incentive to combine licenses. (IU/Medical Center)

Response: The NRC computes the material licenses fee categories, which includes fee categories 7.A. and 7.B, based on 10 CFR part 170 application fees and estimated inspection costs for each fee category. The NRC believes that the current fee category descriptions and annual fees associated with these fee categories accurately reflect the NRC's cost of providing generic activities and other regulatory costs to the licensees. For example, licensees that fall into the 7.A. fee category have unique regulatory requirements over and above the requirements of 7.B. licensees. Fee category 7.A. licensees require additional licensing and inspection actions and guidance documents that are specific to the large sources they are authorized to possess.

D. Department of Energy Comments

Comment: The basis for the NRC's determination of generic/other uranium recovery costs and other line items affecting the DOE annual fee amount, including the specific regulatory actions and activities that account for the fees, is not provided. Considering the NRC proposes to collect 70 percent of the uranium recovery licensee fees from DOE, the NRC has not demonstrated that more than half of the uranium recovery license support scope is the direct result of DOE oversight, particularly since DOE is invoiced separately for site-specific document reviews. The DOE is aware of significant uranium recovery license activity involving specific licensees while the pace of Title II site transitions to DOE-Legacy Management has slowed as the NRC evaluates groundwater remedies at former mill sites that are regulated under specific licenses. Greater detail in the work papers is warranted to justify this allocation. (DOE)

Response: The NRC described the overall methodology for determining fees for uranium recovery facilities, including DOE, in the 2002 fee rule (67 FR 42612; June 24, 2002). The NRC recovers fees from DOE through both user fees charged under 10 CFR part 170 for specific UMTRCA oversight activities and annual fees charged under 10 CFR part 171 for generic and other costs related to UMTRCA and other uranium recovery activities. As shown in the work papers referenced in the proposed FY 2014 rule, the NRC calculated the total amount of budgeted resources for UMTRCA activities related to DOE sites in the FY 2014 appropriation by computing the cost of staff hours budgeted to conduct the work (in terms of full-time equivalent, or FTE) and the budgeted contract costs. The total amount of budgeted resources was reduced by the amount expected to be recovered by direct fees for site-specific UMTRCA activities. The NRC estimated the amount of direct fees by analyzing billing data and the actual contractual work charged to DOE for the previous four quarters. The estimate, therefore, reflects any recent reductions in NRC oversight activities. The remainder of the UMTRCA budgeted amount related to DOE sites was charged to DOE for generic activities. In addition to those generic costs, DOE was charged for 10 percent of the overall generic costs attributable to the uranium recovery program. The remaining 90 percent of the overall generic costs was charged to other members of the uranium recovery class. Therefore, DOE is not paying a disproportionate amount for NRC costs for generic regulatory efforts.

The NRC performs several types of activities in its oversight of UMTRCA sites that have been transferred to DOE for long-term surveillance and maintenance. The NRC staff reviews the reports generated by DOE, including routine ground water monitoring reports, annual site remediation performance reports, annual inspection reports and other technical reports generated by DOE. The NRC staff also reviews and provides comments on non-routine reports such as the reports developed by DOE concerning Many Devils Wash at the Shiprock site and the Phytoremediation Pilot Study at the Monument Valley site. In addition, if DOE proposes to revise a ground water corrective action plan or remediation plan at a site, the NRC staff would review and concur on the revised plan. The NRC staff also performs observational site visits at UMTRCA sites to observe the DOE, and DOE contractors, performing the annual inspections of the UMTRCA sites required by the site long-term surveillance plan. Other significant staff actions include participating in the activities related to the development and implementation of the 5-year plan to address uranium contamination on the Navajo Nation. No change was made to the final rule in response to this comment.

Comment: The NRC should explain why the work paper line item includes $36,000 in contract dollars since this line item has been a non-zero cost item since 2007. (DOE)

Response: The NRC agrees with this comment, and provided the analysis of the DOE pilot study to DOE staff on April 28, 2014. The $36,000 was to support a contract with the Center for Nuclear Waste Regulatory Analysis for the review of the DOE report, ''Monitored Natural and Enhanced Attenuation of the Alluvial Aquifer and Subpile Soils at the Monument Valley, Arizona Site: Final Pilot Study Report,'' dated April 2013. No change was made

to the final rule in response to this comment.

Comment: The hourly rate increased by 2.6 percent from FY 2013 to FY 2014, in contrast to long-term surveillance charges, which assumes a discount rate of 1 percent annually. The funds collected for long-term surveillance at any given site will be exhausted if the cost of inflation outpaces the discount rate, after which long-term surveillance and maintenance costs will be borne by the tax payer. (DOE)

Response: The hourly fee established for this rule is used to assess fees is applicable to all NRC activities for which fees are charged. The long-term surveillance charges referred to by the commenter are paid by mill operators into the general treasury of the United States or an appropriate State agency to cover costs of long-term surveillance after termination of the mill license. The NRC regulations in appendix A to 10 CFR part 40, criterion X, state that the total charge must be such that, with an assumed 1 percent annual real interest rate, the collected funds will yield interest in an amount sufficient to cover annual surveillance costs. Long-term surveillance is an activity that is carried out by DOE, but not the NRC. The matter of whether surveillance charges will be sufficient to cover DOE's surveillance costs is, therefore, not within the scope of the NRC's fee rule. The DOE is free to file a rulemaking petition to request a change in criterion X if the current provisions are insufficient to ensure that sufficient funds are collected to cover surveillance costs in the long term.

Comment: The proposed rule should indicate if the DOE annual fee includes oversight for the Moab UMTRCA Title I site, where the disposal cell is currently under construction. (DOE)

Response: The NRC disagrees that the rule should state whether the DOE annual fee includes oversight for the Moab UMTRCA Title I site. The NRC calculates the total annual fee for DOE, but leaves the responsibility of distributing the annual fee to specific sites to DOE as it deems appropriate. No change was made to the final rule in response to this comment.

E. Process Efficiencies

Comment: Many commenters from the nuclear industry, mining and uranium recovery industry commented about improving resource utilization and streamlining regulatory processes such as NUREG–1910, ''Generic Environmental Impact Statement for *In-Situ* Leach Uranium Milling Facilities,'' performance-based licensing for uranium recovery licensees and Section 106 consultation process, etc.

Response: Initially, the NRC notes that these comments are outside of the scope of the proposed fee rule. As proposed, the rule would simply amend the licensing, inspection, and annual fees charged to the applicants and licensees currently subject to the NRC's fee rules for FY 2014. In any event, the NRC takes process efficiencies seriously and the NRC will continue to examine ways to utilize its resources more efficiently and streamline licensing processes for licensees and applicants. The NRC is open to input from industry and would be willingly to discuss areas for process improvement in a publicly noticed meeting at the request of the industry.

F. Out of Scope Comments

Comments: The NRC should implement a number of recommendations to improve the efficiency of NRC operations and the effect of perceived inefficiencies on the fees the NRC charges. Recommendations include: Favoring and enhancing risk-informed, performance-based licensing and regulatory approaches; increasing the efficiency of certain environmental reviews; adhering to existing Commission-approved guidance while working to prepare new guidance with the aid of stakeholder input; certifying standardized designs for uranium recovery facilities to streamline the application and review process; developing guidance, after an opportunity for public comment, regarding the consultation process under Section 106 of the National Historic Preservation Act; shifting experienced NRC staff personnel from the Office of New Reactors to the Office of Nuclear Reactor Regulation; and increasing the agency's focus on resource management, workload prioritization, and issue closure to promote timely NRC reviews of licensing actions and to improve management of the agency's generic activities, such as rulemakings. Some commenters also raised the concern that the higher the NRC's fees, the greater the financial burden on those required to pay them.

Response: These comments are out of the scope of this rulemaking. The primary purpose of the NRC's annual fee recovery rulemaking is to update the NRC's fee schedules to account for the appropriations the NRC received for the current fiscal year, and to make other necessary corrections or appropriate changes to specific aspects of the NRC's fee regulations. Procedurally, by the time the NRC is developing its fee recovery rule, Congress has set the NRC's appropriation and, thus, the amount the NRC must collect in fees. This situation leaves little to no room for the NRC to make substantial operational or regulatory changes during the development of the fee recovery rule that could meaningfully impact the fees that the rulemaking is addressing. Consequently, making changes to the way the NRC operates as an agency, manages its personnel, or conducts regulatory activities is, therefore, not within the scope of this rulemaking.

With that said, the NRC takes very seriously the importance of examining and improving the efficiency of its operations and the prioritization of its regulatory activities. Recognizing the importance of continuous reexamination and improvement of the way the agency does business, the NRC has undertaken, and continues to undertake, a number of significant initiatives aimed at improving the efficiency of NRC operations and enhancing the agency's approach to regulating. Though comments addressing these issues may not be within the scope of this fee rulemaking, the NRC takes input of this type very seriously and will consider these comments in our program operations.

V. Section-by-Section Analysis

The following paragraphs describe the specific amendments for this final rule.

10 CFR 170.3, Definitions

The NRC amends the definition of ''research reactor'' to correctly reference the definition of ''testing facility.''

10 CFR 170.12, Payments of Fees

The NRC modifies paragraph (b)(3) and deletes paragraphs (b)(5), (b)(6), and (b)(7) based on the latest accounting cost system information, which deems the language referencing application costs deferred before August 9, 1991, as obsolete. The NRC also adds a new paragraph (g) to clarify that the NRC is authorized to collect any underpayment of fees from licensees to satisfy the requirements of OBRA–90, as amended.

10 CFR 170.20, Average Cost per Professional Staff Hour

The NRC revises this section to reflect the hourly rate for FY 2014.

10 CFR 170.21, Schedule of Fees for Production or Utilization Facilities, Review of Standard Referenced Design Approvals, Special Projects, Inspections, and Import and Export Licenses

The NRC revises fees for fee category code K. to reflect the FY 2014 hourly rate for flat fee applications.

10 CFR 170.31, Schedule of Fees for Materials Licenses and Other Regulatory Services, Including Inspections, and Import and Export Licenses

The NRC revises the fee category description for 2.B. by adding footnotes 6, 7, and 8 to avoid duplicate billing and to provide exemptions of fees from fee category codes with identical requirements. The NRC revises the fee category descriptions for 3.P. and 7.C. by adding footnotes 9 and 10, respectively, for the same reasons.

10 CFR 171.11, Exemptions

The NRC redesignates paragraphs (a), (b), (c), and (d) as paragraphs (b), (c), (d), and (e), respectively, adds a new paragraph (a), and revises newly redesignated paragraph (c) to clarify the time period for filing exemption requests applies to all exemption criteria instead of one exemption criterion.

10 CFR 171.15, Annual Fees: Reactor Licenses and Independent Fuel Storage Licenses

The NRC revises paragraph (a) to allow an ISFSI licensee to be charged an annual fee only when the licensee has the ability to use or to derive benefit from the license. The NRC further revises paragraph (a) by replacing ''and'' with ''or'' to clarify that research reactors and test reactors are two separate types of non-power reactors. The NRC revises paragraph (b)(1) to reflect the required FY 2014 annual fee to be collected from each operating power reactor by September 30, 2014. The NRC revises the introductory text of paragraph (b)(2) to reflect FY 2014 in reference to annual fees and fee relief adjustment. The NRC revises paragraph (c)(1) and the introductory text of paragraph (c)(2) to reflect the FY 2014 spent fuel storage/reactor decommissioning and spent fuel storage annual fee for 10 CFR part 50 licenses and 10 CFR part 72 licensees who do not hold a 10 CFR part 50 license, and the FY 2014 fee relief adjustment. The NRC revises the introductory text of paragraph (d)(1) and paragraphs (d)(2) and (d)(3) to reflect the FY 2014 fee-relief adjustment for the operating reactor power class of licenses, the number of operating power reactors, and the FY 2014 fee relief adjustment for spent fuel storage reactor decommissioning class of licenses. The NRC revises paragraph (e) to reflect the FY 2014 annual fees for research reactors and test reactors. The NRC further revises paragraph (e) by replacing ''and'' with ''or'' to clarify that research reactors and test reactors are two separate types of non-power reactors.

10 CFR 171.16, Annual Fees: Materials Licensees, Holders of Certificates of Compliance, Holders of Sealed Source and Device Registrations, Holders of Quality Assurance Program Approvals, and Government Agencies Licensed by the NRC

The NRC revises paragraphs (d) and (e) to reflect FY 2014 annual fees and the FY 2014 fee-relief adjustment. The NRC removes the reference to footnote 5 (which indicates that there is no licensee under a particular fee category) for fee category 1.A.(2)(a) in paragraph (d) due to a licensee that was recently moved to this fee category. The NRC revises the fee category code description to 2.B. to add footnotes 16, 17, and 18 to avoid duplicate billing and to provide an exemption of fees from fee category codes with identical requirements. The NRC also revises fee category code descriptions 3.P. and 7.C. to add footnotes 19 and 20, respectively, for the same reasons.

10 CFR 171.19, Payment of Fees

The NRC adds paragraph (f) to clarify that the NRC is authorized to collect any underpayment of fees from licensees to satisfy the requirements of OBRA–90, as amended.

VI. Regulatory Flexibility Certification

Section 604 of the Regulatory Flexibility Act requires agencies to perform an analysis that considers the impact of a rulemaking on small entities. The NRC prepared a FY 2013 biennial regulatory flexibility analysis in accordance with the FY 2001 final rule (66 FR 32467; June 14, 2001). This rule also stated the small entity fees will be reexamined every 2 years and in the same years the NRC conducts the biennial review of fees as required by the Chief Financial Officer Act of 1990. For the FY 2013 final rule, small entity fees increased to $2,800 for the maximum upper-tier small entity fee and increased to $600 for the lower-tier small entity fee as a result of the biennial review, which factored in the number of increased hours for application reviews and inspections in the fee calculations. These fees remain unchanged for this final rule. The NRC's regulatory flexibility analysis for the FY 2013 final rule is available as indicated in Section XV, ''Availability of Documents,'' of this document. The next small entity biennial review is scheduled for FY 2015.

VII. Regulatory Analysis

Under OBRA–90, as amended, and the AEA, the NRC is required to recover 90 percent of its budget authority, or total appropriations of $1,055.9 million, in FY 2014. The NRC established fee methodology guidelines for 10 CFR part 170 in 1978, and more fee methodology guidelines through the establishment of 10 CFR part 171 in 1986. In subsequent rulemakings, the NRC has adjusted its fees without changing the underlying principles of its fee policy in order to ensure that the NRC continues to comply with the statutory requirements for cost recovery in OBRA–90 and the AEA.

In this rulemaking, the NRC continues this long-standing approach. Therefore, the NRC did not identify any alternatives to the current fee structure guidelines and did not prepare a regulatory analysis for this rulemaking.

VIII. Backfitting and Issue Finality

The NRC has determined that the backfit rule, 10 CFR 50.109, does not apply to this final rule and that a backfit analysis is not required. A backfit analysis is not required because these amendments do not require the modification of, or addition to, systems, structures, components, or the design of a facility, or the design approval or manufacturing license for a facility, or the procedures or organization required to design, construct, or operate a facility.

IX. Plain Writing

The Plain Writing Act of 2010 (Pub. L. 111–274) requires Federal agencies to write documents in a clear, concise, and well-organized manner. The NRC has written this document to be consistent with the Plain Writing Act as well as the Presidential Memorandum, ''Plain Language in Government Writing,'' published June 10, 1998 (63 FR 31883).

X. National Environmental Policy Act

The NRC has determined that this rule is the type of action described in 10 CFR 51.22(c)(1). Therefore, neither an environmental impact statement nor environmental assessment has been prepared for this final rule.

XI. Paperwork Reduction Act

This rule does not contain any information collection requirements and, therefore, is not subject to the

requirements of the Paperwork Reduction Act of 1995 (44 U.S.C. 3501 et seq.).

Public Protection Notification

The NRC may not conduct or sponsor, and a person is not required to respond to a request for information or an information collection requirement unless the requesting document displays a currently valid OMB control number.

XII. Congressional Review Act

In accordance with the Congressional Review Act of 1996 (5 U.S.C. 801–808), the NRC has determined that this action is a major rule and has verified the determination with the Office of Information and Regulatory Affairs of the Office of Management and Budget.

XIII. Voluntary Consensus Standards

The National Technology Transfer and Advancement Act of 1995, Pub. L. 104–113, requires that Federal agencies use technical standards that are developed or adopted by voluntary consensus standards bodies unless the use of such a standard is inconsistent with applicable law or otherwise impractical. In this final fee rule, the NRC amends the licensing, inspection, and annual fees charged to its licensees and applicants, as necessary, to recover approximately 90 percent of its budget authority in FY 2014, as required by OBRA–90, as amended. This action does not constitute the establishment of a standard that contains generally applicable requirements.

XIV. Availability of Guidance

The Small Business Regulatory Enforcement Fairness Act requires all Federal agencies to prepare a written compliance guide for each rule for which the NRC is required by 5 U.S.C. 604 to prepare a regulatory flexibility analysis. The NRC, in compliance with the law, prepared the ''Small Entity Compliance Guide'' for the FY 2013 final fee rule. This document, which has been relabeled for FY 2014, is available as indicated in Section XV, ''Availability of Documents,'' of this document. The next compliance guide will be developed when the NRC completes the next small entity biennial review in FY 2015.

XV. Availability of Documents

The documents identified in the following table are available to interested persons through one or more of the following methods, as indicated.

Document	ADAMS Accession No./Web link/**Federal Register** citation
FY 2014 Final Fee Rule Work Papers	ML14064A394
FY 2013 Regulatory Flexibility Analysis	ML13067A088
FY 2014 U.S. Nuclear Regulatory Commission Small Entity Compliance Guide.	ML14055A070
NUREG–1100, Volume 29, ''Congressional Budget Justification: Fiscal Year 2014'' (April 2013).	*http://www.nrc.gov/reading-rm/doc-collections/nuregs/staff/sr1100/v29/*
NRC Form 526, Certification of Small Entity Status for the Purposes of Annual Fees Imposed under 10 CFR Part 171.	*http://www.nrc.gov/reading-rm/doc-collections/forms/nrc526.pdf*
FY 2014 Proposed Fee Rule, ''Revision of Fee Schedules; Fee Recovery for Fiscal Year 2014; Proposed Fee Rule,'' published April 14, 2014.	*http://www.gpo.gov/fdsys/pkg/FR-2014-04-14/pdf/2014-08221.pdf*
SECY–05–0164, ''Annual Fee Calculation Method,'' September 15, 2005.	ML052580332
''Recommendations for Enhancing Reactor Safety in the 21st Century: The Near-Term Task Force Review of Insights From the Fukushima Dai-ichi Accident,'' July 12, 2011.	ML111861807

List of Subjects

10 CFR Part 170

Byproduct material, Import and export licenses, Intergovernmental relations, Non-payment penalties, Nuclear materials, Nuclear power plants and reactors, Source material, Special nuclear material.

10 CFR Part 171

Annual charges, Byproduct material, Holders of certificates, registrations, approvals, Intergovernmental relations, Nonpayment penalties, Nuclear materials, Nuclear power plants and reactors, Source material, Special nuclear material.

For the reasons set out in the preamble and under the authority of the Atomic Energy Act of 1954, as amended; the Energy Reorganization Act of 1974, as amended; and 5 U.S.C. 552 and 553, the NRC is adopting the following amendments to 10 CFR parts 170 and 171.

PART 170—FEES FOR FACILITIES, MATERIALS IMPORT AND EXPORT LICENSES AND OTHER REGULATORY SERVICES UNDER THE ATOMIC ENERGY ACT OF 1954, AS AMENDED

■ 1. The authority citation for part 170 continues to read as follows:

Authority: Independent Offices Appropriations Act sec. 501 (31 U.S.C. 9701); Atomic Energy Act sec. 161(w) (42 U.S.C. 2201(w)); Energy Reorganization Act sec. 201 (42 U.S.C. 5841); Chief Financial Officers Act sec. 205 (31 U.S.C. 901, 902); Government Paperwork Elimination Act sec. 1704 (44 U.S.C. 3504 note); Energy Policy Act secs. 623, Energy Policy Act of 2005 sec. 651(e), Pub. L. 109–58, 119 Stat. 783 (42 U.S.C. 2201(w), 2014, 2021, 2021b, 2111).

■ 2. In § 170.3, revise the definition ''research reactor'' to read as follows:

§ 170.3 Definitions.

* * * * *

Research reactor means a nuclear reactor licensed by the Commission under the authority of subsection 104c of the Act and pursuant to the provisions of § 50.21(c) of this chapter for operation at a thermal power level of 10 megawatts or less, and which is not a *testing facility* as defined in this section.

* * * * *

■ 3. In § 170.12, revise paragraph (b)(3), remove paragraphs (b)(5), (b)(6), and (b)(7), and add a new paragraph (g) to read as follows:

§ 170.12 Payment of fees.

* * * * *

(b) * * *

(3) The NRC intends to bill each applicant or licensee at quarterly intervals for all accumulated costs for each application the applicant or licensee has on file for NRC review, until the review is completed.

* * * * *

(g) *Collection of underpayment of fees.* The NRC is entitled to collect any

underpayment of fees as a result of an error by the NRC.

■ 4. Revise § 170.20 to read as follows:

§ 170.20 Average cost per professional staff-hour.

Fees for permits, licenses, amendments, renewals, special projects, 10 CFR part 55 re-qualification and replacement examinations and tests, other required reviews, approvals, and inspections under §§ 170.21 and 170.31 will be calculated using the professional staff-hour rate of $279 per hour.

■ 5. In § 170.21, in the table, revise the fee category K. to read as follows:

§ 170.21 Schedule of fees for production or utilization facilities, review of standard referenced design approvals, special projects, inspections, and import and export licenses.

* * * * *

SCHEDULE OF FACILITY FEES

[See footnotes at end of table]

Facility categories and type of fees	Fees [1] [2]
* * * * * * *	
K. Import and export licenses:	
Licenses for the import and export only of production or utilization facilities or the export only of components for production or utilization facilities issued under 10 CFR part 110.	
1. Application for import or export of production or utilization facilities [4] (including reactors and other facilities) and exports of components requiring Commission and Executive Branch review, for example, actions under 10 CFR 110.40(b).	
Application—new license, or amendment; or license exemption request	$18,200
2. Application for export of reactor and other components requiring Executive Branch review, for example, those actions under 10 CFR 110.41(a).	
Application—new license, or amendment; or license exemption request	$9,800
3. Application for export of components requiring the assistance of the Executive Branch to obtain foreign government assurances.	
Application—new license, or amendment; or license exemption request	$4,500
4. Application for export of facility components and equipment not requiring Commission or Executive Branch review, or obtaining foreign government assurances.	
Application—new license, or amendment; or license exemption request	$3,400
5. Minor amendment of any active export or import license, for example, to extend the expiration date, change domestic information, or make other revisions which do not involve any substantive changes to license terms or conditions or to the type of facility or component authorized for export and, therefore, do not require in-depth analysis or review or consultation with the Executive Branch, U.S. host state, or foreign government authorities.	
Minor amendment to license	$1,400

[1] Fees will not be charged for orders related to civil penalties or other civil sanctions issued by the Commission under § 2.202 of this chapter or for amendments resulting specifically from the requirements of these orders. For orders unrelated to civil penalties or other civil sanctions, fees will be charged for any resulting licensee-specific activities not otherwise exempted from fees under this chapter. Fees will be charged for approvals issued under a specific exemption provision of the Commission's regulations under Title 10 of the *Code of Federal Regulations* (e.g., 10 CFR 50.12, 10 CFR 73.5) and any other sections in effect now or in the future, regardless of whether the approval is in the form of a license amendment, letter of approval, safety evaluation report, or other form.

[2] Full cost fees will be determined based on the professional staff time and appropriate contractual support services expended. For applications currently on file and for which fees are determined based on the full cost expended for the review, the professional staff hours expended for the review of the application up to the effective date of the final rule will be determined at the professional rates in effect when the service was provided.

* * * * * * *

[4] Imports only of major components for end-use at NRC-licensed reactors are authorized under NRC general import license in 10 CFR 110.27.

■ 6. In § 170.31, revise the table to read as follows:

§ 170.31 Schedule of fees for materials licenses and other regulatory services, including inspections, and import and export licenses.

* * * * *

SCHEDULE OF MATERIALS FEES

[See footnotes at end of table]

Category of materials licenses and type of fees [1]	Fee [2] [3]
1. Special nuclear material:	
A. (1) Licenses for possession and use of U–235 or plutonium for fuel fabrication activities:	
(a) Strategic Special Nuclear Material (High Enriched Uranium) [Program Code(s): 21130]	Full Cost.
(b) Low Enriched Uranium in Dispersible Form Used for Fabrication of Power Reactor Fuel [Program Code(s): 21210]	Full Cost.
(2) All other special nuclear materials licenses not included in Category 1.A.(1) which are licensed for fuel cycle activities:	
(a) Facilities with limited operations [Program Code(s): 21310, 21320]	Full Cost.
(b) Gas centrifuge enrichment demonstration facilities	Full Cost.
(c) Others, including hot cell facilities	Full Cost.
B. Licenses for receipt and storage of spent fuel and reactor-related Greater than Class C (GTCC) waste at an independent spent fuel storage installation (ISFSI) [Program Code(s): 23200].	Full Cost.
C. Licenses for possession and use of special nuclear material of less than a critical mass as defined in § 70.4 in sealed sources contained in devices used in industrial measuring systems, including x-ray fluorescence analyzers.[4]	
Application [Program Code(s): 22140]	$1,300.

SCHEDULE OF MATERIALS FEES—Continued

[See footnotes at end of table]

Category of materials licenses and type of fees [1]	Fee [2 3]
D. All other special nuclear material licenses, except licenses authorizing special nuclear material in sealed or unsealed form in combination that would constitute a critical mass, as defined in § 70.4 of this chapter, for which the licensee shall pay the same fees as those under Category 1.A.[4]	
Application [Program Code(s): 22110, 22111, 22120, 22131, 22136, 22150, 22151, 22161, 22170, 23100, 23300, 23310].	$2,600.
E. Licenses or certificates for construction and operation of a uranium enrichment facility [Program Code(s): 21200]	Full Cost.
F. For special nuclear materials licenses in sealed or unsealed form of greater than a critical mass as defined in § 70.4 of this chapter.[4] [Program Code(s): 22155].	Full Cost.
2. Source material:	
A. (1) Licenses for possession and use of source material for refining uranium mill concentrates to uranium hexafluoride or for deconverting uranium hexafluoride in the production of uranium oxides for disposal. [Program Code(s): 11400].	Full Cost.
(2) Licenses for possession and use of source material in recovery operations such as milling, *in-situ* recovery, heap-leaching, ore buying stations, ion-exchange facilities, and in processing of ores containing source material for extraction of metals other than uranium or thorium, including licenses authorizing the possession of byproduct waste material (tailings) from source material recovery operations, as well as licenses authorizing the possession and maintenance of a facility in a standby mode.	
(a) Conventional and Heap Leach facilities [Program Code(s): 11100]	Full Cost.
(b) Basic *In Situ* Recovery facilities [Program Code(s): 11500]	Full Cost.
(c) Expanded *In Situ* Recovery facilities [Program Code(s): 11510]	Full Cost.
(d) *In Situ* Recovery Resin facilities [Program Code(s): 11550]	Full Cost.
(e) Resin Toll Milling facilities [Program Code(s): 11555]	Full Cost.
(f) Other facilities [Program Code(s): 11700]	Full Cost.
(3) Licenses that authorize the receipt of byproduct material, as defined in Section 11e.(2) of the Atomic Energy Act, from other persons for possession and disposal, except those licenses subject to the fees in Category 2.A.(2) or Category 2.A.(4) [Program Code(s): 11600, 12000].	Full Cost.
(4) Licenses that authorize the receipt of byproduct material, as defined in Section 11e.(2) of the Atomic Energy Act, from other persons for possession and disposal incidental to the disposal of the uranium waste tailings generated by the licensee's milling operations, except those licenses subject to the fees in Category 2.A.(2) [Program Code(s): 12010].	Full Cost.
(5) Licenses that authorize the possession of source material related to removal of contaminants (source material) from drinking water [Program Code(s): 11820].	Full Cost.
B. Licenses which authorize the possession, use, and/or installation of source material for shielding.[6 7 8]	
Application [Program Code(s): 11210]	$1,230.
C. Licenses to distribute items containing source material to persons exempt from the licensing requirements of part 40 of this chapter.	
Application [Program Code(s): 11240]	$6,900.
D. Licenses to distribute source material to persons generally licensed under part 40 of this chapter.	
Application [Program Codes(s): 11230, 11231]	$2,000.
E. Licenses for possession and use of source material for processing or manufacturing of products or materials containing source material for commercial distribution.	
Application [Program Code(s): 11710]	$2,800.
F. All other source material licenses.	
Application [Program Code(s): 11200, 11220, 11221, 11300, 11800, 11810]	$2,800.
3. Byproduct material:	
A. Licenses of broad scope for the possession and use of byproduct material issued under parts 30 and 33 of this chapter for processing or manufacturing of items containing byproduct material for commercial distribution.	
Application [Program Code(s): 03211, 03212, 03213]	$13,100.
B. Other licenses for possession and use of byproduct material issued under part 30 of this chapter for processing or manufacturing of items containing byproduct material for commercial distribution.	
Application [Program Code(s): 03214, 03215, 22135, 22162]	$3,900.
C. Licenses issued under §§ 32.72 and/or 32.74 of this chapter that authorize the processing or manufacturing and distribution or redistribution of radiopharmaceuticals, generators, reagent kits, and/or sources and devices containing byproduct material. This category does not apply to licenses issued to nonprofit educational institutions whose processing or manufacturing is exempt under § 170.11(a)(4).	
Application [Program Code(s): 02500, 02511, 02513]	$4,900.
D. [Reserved]	N/A.
E. Licenses for possession and use of byproduct material in sealed sources for irradiation of materials in which the source is not removed from its shield (self-shielded units).	
Application [Program Code(s): 03510, 03520]	$3,200.
F. Licenses for possession and use of less than 10,000 curies of byproduct material in sealed sources for irradiation of materials in which the source is exposed for irradiation purposes. This category also includes underwater irradiators for irradiation of materials where the source is not exposed for irradiation purposes.	
Application [Program Code(s): 03511]	$6,500.
G. Licenses for possession and use of 10,000 curies or more of byproduct material in sealed sources for irradiation of materials in which the source is exposed for irradiation purposes. This category also includes underwater irradiators for irradiation of materials where the source is not exposed for irradiation purposes.	
Application [Program Code(s): 03521]	$62,400.
H. Licenses issued under Subpart A of part 32 of this chapter to distribute items containing byproduct material that require device review to persons exempt from the licensing requirements of part 30 of this chapter. The category does not include specific licenses authorizing redistribution of items that have been authorized for distribution to persons exempt from the licensing requirements of part 30 of this chapter.	
Application [Program Code(s): 03254, 03255, 03257]	$5,100.

SCHEDULE OF MATERIALS FEES—Continued

[See footnotes at end of table]

Category of materials licenses and type of fees [1]	Fee [2 3]
I. Licenses issued under Subpart A of part 32 of this chapter to distribute items containing byproduct material or quantities of byproduct material that do not require device evaluation to persons exempt from the licensing requirements of part 30 of this chapter. This category does not include specific licenses authorizing redistribution of items that have been authorized for distribution to persons exempt from the licensing requirements of part 30 of this chapter.	
Application [Program Code(s): 03250, 03251, 03252, 03253, 03256]	$11,500.
J. Licenses issued under Subpart B of part 32 of this chapter to distribute items containing byproduct material that require sealed source and/or device review to persons generally licensed under part 31 of this chapter. This category does not include specific licenses authorizing redistribution of items that have been authorized for distribution to persons generally licensed under part 31 of this chapter.	
Application [Program Code(s): 03240, 03241, 03243]	$2,000.
K. Licenses issued under Subpart B of part 32 of this chapter to distribute items containing byproduct material or quantities of byproduct material that do not require sealed source and/or device review to persons generally licensed under part 31 of this chapter. This category does not include specific licenses authorizing redistribution of items that have been authorized for distribution to persons generally licensed under part 31 of this chapter.	
Application [Program Code(s): 03242, 03244]	$1,100.
L. Licenses of broad scope for possession and use of byproduct material issued under parts 30 and 33 of this chapter for research and development that do not authorize commercial distribution.	
Application [Program Code(s): 01100, 01110, 01120, 03610, 03611, 03612, 03613]	$5,500.
M. Other licenses for possession and use of byproduct material issued under part 30 of this chapter for research and development that do not authorize commercial distribution.	
Application [Program Code(s): 03620]	$3,700.
N. Licenses that authorize services for other licensees, except:	
(1) Licenses that authorize only calibration and/or leak testing services are subject to the fees specified in fee Category 3.P.; and	
(2) Licenses that authorize waste disposal services are subject to the fees specified in fee Categories 4.A., 4.B., and 4.C.	
Application [Program Code(s): 03219, 03225, 03226]	$7,400.
O. Licenses for possession and use of byproduct material issued under part 34 of this chapter for industrial radiography operations.	
Application [Program Code(s): 03310, 03320]	$4,100.
P. All other specific byproduct material licenses, except those in Categories 4.A. through 9.D.[9]	
Application [Program Code(s): 02400, 02410, 03120, 03121, 03122, 03123, 03124, 03130, 03140, 03220, 03221, 03222, 03800, 03810, 22130].	$2,000.
Q. Registration of a device(s) generally licensed under part 31 of this chapter.	
Registration	$400.
R. Possession of items or products containing radium-226 identified in 10 CFR 31.12 which exceed the number of items or limits specified in that section.[5]	
1. Possession of quantities exceeding the number of items or limits in 10 CFR 31.12(a)(4), or (5) but less than or equal to 10 times the number of items or limits specified.	
Application [Program Code(s): 02700]	$2,600.
2. Possession of quantities exceeding 10 times the number of items or limits specified in 10 CFR 31.12(a)(4), or (5).	
Application [Program Code(s): 02710]	$2,000.
S. Licenses for production of accelerator-produced radionuclides.	
Application [Program Code(s): 03210]	$13,200.
4. Waste disposal and processing:	
A. Licenses specifically authorizing the receipt of waste byproduct material, source material, or special nuclear material from other persons for the purpose of contingency storage or commercial land disposal by the licensee; or licenses authorizing contingency storage of low-level radioactive waste at the site of nuclear power reactors; or licenses for receipt of waste from other persons for incineration or other treatment, packaging of resulting waste and residues, and transfer of packages to another person authorized to receive or dispose of waste material. [Program Code(s): 03231, 03233, 03235, 03236, 06100, 06101].	Full Cost.
B. Licenses specifically authorizing the receipt of waste byproduct material, source material, or special nuclear material from other persons for the purpose of packaging or repackaging the material. The licensee will dispose of the material by transfer to another person authorized to receive or dispose of the material.	
Application [Program Code(s): 03234]	$6,000.
C. Licenses specifically authorizing the receipt of prepackaged waste byproduct material, source material, or special nuclear material from other persons. The licensee will dispose of the material by transfer to another person authorized to receive or dispose of the material.	
Application [Program Code(s): 03232]	$5,000.
5. Well logging:	
A. Licenses for possession and use of byproduct material, source material, and/or special nuclear material for well logging, well surveys, and tracer studies other than field flooding tracer studies.	
Application [Program Code(s): 03110, 03111, 03112]	$3,900.
B. Licenses for possession and use of byproduct material for field flooding tracer studies.	
Licensing [Program Code(s): 03113]	Full Cost.
6. Nuclear laundries:	
A. Licenses for commercial collection and laundry of items contaminated with byproduct material, source material, or special nuclear material.	
Application [Program Code(s): 03218]	$22,300.
7. Medical licenses:	

SCHEDULE OF MATERIALS FEES—Continued

[See footnotes at end of table]

Category of materials licenses and type of fees [1]	Fee [2 3]
A. Licenses issued under parts 30, 35, 40, and 70 of this chapter for human use of byproduct material, source material, or special nuclear material in sealed sources contained in gamma stereotactic radiosurgery units, teletherapy devices, or similar beam therapy devices.	
Application [Program Code(s): 02300, 02310]	$9,000.
B. Licenses of broad scope issued to medical institutions or two or more physicians under parts 30, 33, 35, 40, and 70 of this chapter authorizing research and development, including human use of byproduct material, except licenses for byproduct material, source material, or special nuclear material in sealed sources contained in teletherapy devices. This category also includes the possession and use of source material for shielding when authorized on the same license.[10]	
Application [Program Code(s): 02110]	$8,700.
C. Other licenses issued under parts 30, 35, 40, and 70 of this chapter for human use of byproduct material, source material, and/or special nuclear material, except licenses for byproduct material, source material, or special nuclear material in sealed sources contained in teletherapy devices.	
Application [Program Code(s): 02120, 02121, 02200, 02201, 02210, 02220, 02230, 02231, 02240, 22160]	$3,400.
8. Civil defense:	
A. Licenses for possession and use of byproduct material, source material, or special nuclear material for civil defense activities.	
Application [Program Code(s): 03710]	$2,600.
9. Device, product, or sealed source safety evaluation:	
A. Safety evaluation of devices or products containing byproduct material, source material, or special nuclear material, except reactor fuel devices, for commercial distribution.	
Application—each device	$5,400.
B. Safety evaluation of devices or products containing byproduct material, source material, or special nuclear material manufactured in accordance with the unique specifications of, and for use by, a single applicant, except reactor fuel devices.	
Application—each device	$9,100.
C. Safety evaluation of sealed sources containing byproduct material, source material, or special nuclear material, except reactor fuel, for commercial distribution.	
Application—each source	$5,300.
D. Safety evaluation of sealed sources containing byproduct material, source material, or special nuclear material, manufactured in accordance with the unique specifications of, and for use by, a single applicant, except reactor fuel.	
Application—each source	$1,060.
10. Transportation of radioactive material:	
A. Evaluation of casks, packages, and shipping containers:	
1. Spent Fuel, High-Level Waste, and plutonium air packages	Full Cost.
2. Other Casks	Full Cost.
B. Quality assurance program approvals issued under part 71 of this chapter:	
1. Users and Fabricators:	
Application	$4,200.
Inspections	Full Cost.
2. Users:	
Application	$4,200.
Inspections	Full Cost.
C. Evaluation of security plans, route approvals, route surveys, and transportation security devices (including immobilization devices).	Full Cost.
11. Review of standardized spent fuel facilities	Full Cost.
12. Special projects:	
Including approvals, pre-application/licensing activities, and inspections:	
Application [Program Code: 25110]	Full Cost.
13. A. Spent fuel storage cask Certificate of Compliance	Full Cost.
B. Inspections related to storage of spent fuel under § 72.210 of this chapter	Full Cost.
14. A. Byproduct, source, or special nuclear material licenses and other approvals authorizing decommissioning, decontamination, reclamation, or site restoration activities under parts 30, 40, 70, 72, and 76 of this chapter, including MMLs. Application [Program Code(s): 3900, 11900, 21135, 21215, 21240, 21325, 22200]	Full Cost.
B. Site-specific decommissioning activities associated with unlicensed sites, including MMLs, regardless of whether or not the sites have been previously licensed.	Full Cost.
15. Import and Export licenses:	
Licenses issued under part 110 of this chapter for the import and export only of special nuclear material, source material, tritium and other byproduct material, and the export only of heavy water, or nuclear grade graphite (fee categories 15.A. through 15.E.)	
A. Application for export or import of nuclear materials, including radioactive waste requiring Commission and Executive Branch review, for example, those actions under 10 CFR 110.40(b).	
Application—new license, or amendment; or license exemption request	$18,200.
B. Application for export or import of nuclear material, including radioactive waste, requiring Executive Branch review, but not Commission review. This category includes applications for the export and import of radioactive waste and requires NRC to consult with domestic host state authorities (i.e., Low-Level Radioactive Waste Compact Commission, the U.S. Environmental Protection Agency, etc.).	
Application—new license, or amendment; or license exemption request	$9,800.
C. Application for export of nuclear material, for example, routine reloads of low enriched uranium reactor fuel and/or natural uranium source material requiring the assistance of the Executive Branch to obtain foreign government assurances.	
Application—new license, or amendment; or license exemption request	$4,500.
D. Application for export or import of nuclear material not requiring Commission or Executive Branch review, or obtaining foreign government assurances.	

SCHEDULE OF MATERIALS FEES—Continued

[See footnotes at end of table]

Category of materials licenses and type of fees [1]	Fee [2 3]
Application—new license, or amendment; or license exemption request	$3,400.
E. Minor amendment of any active export or import license, for example, to extend the expiration date, change domestic information, or make other revisions which do not involve any substantive changes to license terms and conditions or to the type/quantity/chemical composition of the material authorized for export and, therefore, do not require in-depth analysis, review, or consultations with other Executive Branch, U.S. host state, or foreign government authorities.	
Minor amendment	$1,400.
Licenses issued under part 110 of this chapter for the import and export only of Category 1 and Category 2 quantities of radioactive material listed in Appendix P to part 110 of this chapter (fee categories 15.F. through 15.R.).	
Category 1 (Appendix P, 10 CFR Part 110) Exports:	
F. Application for export of Appendix P Category 1 materials requiring Commission review (e.g. exceptional circumstance review under 10 CFR 110.42(e)(4)) and to obtain government-to-government consent for this process. For additional consent see 15.I.).	
Application—new license, or amendment; or license exemption request	$15,400.
G. Application for export of Appendix P Category 1 materials requiring Executive Branch review and to obtain government-to-government consent for this process. For additional consents see.	
15. Application—new license, or amendment; or license exemption request	$8,900.
H. Application for export of Appendix P Category 1 materials and to obtain one government-to-government consent for this process. For additional consents see 15.I.	
Application—new license, or amendment; or license exemption request	$6,700.
I. Requests for each additional government-to-government consent in support of an export license application or active export license.	
Application—new license, or amendment; or license exemption request	$280.
Category 2 (Appendix P, 10 CFR Part 110) Exports:	
J. Application for export of Appendix P Category 2 materials requiring Commission review (e.g. exceptional circumstance review under 10 CFR 110.42(e)(4)).	
Application—new license, or amendment; or license exemption request	$15,400.
K. Applications for export of Appendix P Category 2 materials requiring Executive Branch review.	
Application—new license, or amendment; or license exemption request	$8,900.
L. Application for the export of Category 2 materials.	
Application—new license, or amendment; or license exemption request	$5,600.
M. [Reserved]	N/A.
N. [Reserved]	N/A.
O. [Reserved]	N/A.
P. [Reserved]	N/A.
Q. [Reserved]	N/A.
Minor Amendments (Category 1 and 2, Appendix P, 10 CFR Part 110, Export):	
R. Minor amendment of any active export license, for example, to extend the expiration date, change domestic information, or make other revisions which do not involve any substantive changes to license terms and conditions or to the type/quantity/chemical composition of the material authorized for export and, therefore, do not require in-depth analysis, review, or consultations with other Executive Branch, U.S. host state, or foreign authorities.	
Minor amendment	$1,400.
16. Reciprocity:	
Agreement State licensees who conduct activities under the reciprocity provisions of 10 CFR 150.20:	
Application	$1,900.
17. Master materials licenses of broad scope issued to Government agencies.	
Application [Program Code(s): 03614]	Full Cost.
18. Department of Energy:	
A. Certificates of Compliance. Evaluation of casks, 11 packages, and shipping containers (including spent fuel, high-level waste, and other casks, and plutonium air packages).	Full Cost.
B. Uranium Mill Tailings Radiation Control Act (UMTRCA) activities	Full Cost.

[1] *Types of fees*—Separate charges, as shown in the schedule, will be assessed for pre-application consultations and reviews; applications for new licenses, approvals, or license terminations; possession-only licenses; issuances of new licenses and approvals; certain amendments and renewals to existing licenses and approvals; safety evaluations of sealed sources and devices; generally licensed device registrations; and certain inspections. The following guidelines apply to these charges:

(a) *Application and registration fees.* Applications for new materials licenses and export and import licenses; applications to reinstate expired, terminated, or inactive licenses, except those subject to fees assessed at full costs; applications filed by Agreement State licensees to register under the general license provisions of 10 CFR 150.20; and applications for amendments to materials licenses that would place the license in a higher fee category or add a new fee category must be accompanied by the prescribed application fee for each category.

(1) Applications for licenses covering more than one fee category of special nuclear material or source material must be accompanied by the prescribed application fee for the highest fee category.

(2) Applications for new licenses that cover both byproduct material and special nuclear material in sealed sources for use in gauging devices will pay the appropriate application fee for fee category 1.C. only.

(b) *Licensing fees.* Fees for reviews of applications for new licenses, renewals, and amendments to existing licenses, pre-application consultations and other documents submitted to the NRC for review, and project manager time for fee categories subject to full cost fees are due upon notification by the Commission in accordance with § 170.12(b).

(c) *Amendment fees.* Applications for amendments to export and import licenses must be accompanied by the prescribed amendment fee for each license affected. An application for an amendment to an export or import license or approval classified in more than one fee category must be accompanied by the prescribed amendment fee for the category affected by the amendment, unless the amendment is applicable to two or more fee categories, in which case the amendment fee for the highest fee category would apply.

(d) *Inspection fees.* Inspections resulting from investigations conducted by the Office of Investigations and nonroutine inspections that result from third-party allegations are not subject to fees. Inspection fees are due upon notification by the Commission in accordance with § 170.12(c).

(e) *Generally licensed device registrations under 10 CFR 31.5.* Submittals of registration information must be accompanied by the prescribed fee.

[2] Fees will not be charged for orders related to civil penalties or other civil sanctions issued by the Commission under 10 CFR 2.202 or for amendments resulting specifically from the requirements of these orders. For orders unrelated to civil penalties or other civil sanctions, fees will be charged for any resulting licensee-specific activities not otherwise exempted from fees under this chapter. Fees will be charged for approvals issued under a specific exemption provision of the Commission's regulations under Title 10 of the *Code of Federal Regulations* (e.g., 10 CFR 30.11, 40.14, 70.14, 73.5, and any other sections in effect now or in the future), regardless of whether the approval is in the form of a license amendment, letter of approval, safety evaluation report, or other form. In addition to the fee shown, an applicant may be assessed an additional fee for sealed source and device evaluations as shown in fee categories 9.A. through 9.D.

[3] Full cost fees will be determined based on the professional staff time multiplied by the appropriate professional hourly rate established in § 170.20 in effect when the service is provided, and the appropriate contractual support services expended.

[4] Licensees paying fees under categories 1.A., 1.B., and 1.E. are not subject to fees under categories 1.C., 1.D. and 1.F. for sealed sources authorized in the same license, except for an application that deals only with the sealed sources authorized by the license.

[5] Persons who possess radium sources that are used for operational purposes in another fee category are not also subject to the fees in this category. (This exception does not apply if the radium sources are possessed for storage only.)

[6] Licensees paying fees under 3.O. are not subject to fees under 2.B. for possession and shielding authorized on the same license.

[7] Licensees paying fees under 3.C. are not subject to fees under 2.B. for possession and shielding authorized on the same license.

[8] Licensees paying fees under 7.C. are not subject to fees under 2.B. for possession and shielding authorized on the same license.

[9] Licensees paying fees under 3.N. are not subject to paying fees under 3.P. for calibration or leak testing services authorized on the same license.

[10] Licensees paying fees under 7.B. are not subject to paying fees under 7.C. for broad scope license licenses issued under parts 30, 35, 40, and 70 of this chapter for human use of byproduct material, source material, and/or special nuclear material, except licenses for byproduct material, source material, or special nuclear material in sealed sources contained in teletherapy devices authorized on the same license.

PART 171—ANNUAL FEES FOR REACTOR LICENSES AND FUEL CYCLE LICENSES AND MATERIALS LICENSES, INCLUDING HOLDERS OF CERTIFICATES OF COMPLIANCE, REGISTRATIONS, AND QUALITY ASSURANCE PROGRAM APPROVALS AND GOVERNMENT AGENCIES LICENSED BY THE NRC

■ 7. The authority citation for part 171 continues to read as follows:

Authority: Consolidated Omnibus Budget Reconciliation Act sec. 7601, Pub. L. 99–272, as amended by sec. 5601, Pub. L. 100–203, as amended by sec. 3201, Pub. L. 101–239, as amended by sec. 6101, Pub. L. 101–508, as amended by sec. 2903a, Pub. L. 102–486 (42 U.S.C. 2213, 2214), and as amended by Title IV, Pub. L. 109–103 (42 U.S.C. 2214); Atomic Energy Act sec. 161(w), 223, 234 (42 U.S.C. 2201(w), 2273, 2282); Energy Reorganization Act sec. 201 (42 U.S.C. 5841); Government Paperwork Elimination Act sec. 1704 (44 U.S.C. 3504 note); Energy Policy Act of 2005 sec. 651(e), Pub. L. 109–58 (42 U.S.C. 2014, 2021, 2021b, 2111).

■ 8. In § 171.11, redesignate paragraphs (a), (b), (c), and (d) as paragraphs (b), (c), (d), and (e), respectively, add a new paragraph (a), and revise newly redesignated paragraph (c) to read as follows:

§ 171.11 Exemptions.

(a) All requests for exemptions must be filed with the NRC within 90 days from the effective date of the final rule establishing the annual fees for which the exemption is sought in order to be considered. Absent extraordinary circumstances, any exemption requests filed beyond that date will not be considered. The filing of an exemption request does not extend the date on which the bill is payable. Only timely payment in full ensures avoidance of interest and penalty charges. If a partial or full exemption is granted, any overpayment will be refunded. Requests for clarification of or questions relating to an annual fee bill must also be filed within 90 days from the date of the initial invoice to be considered.

* * * * *

(c) The Commission may, upon application by an interested person or on its own initiative, grant an exemption from the requirements of this part that it determines is authorized by law or otherwise in the public interest.

* * * * *

■ 9. In § 171.15, revise paragraphs (a) and (b)(1), the introductory text of paragraph (b)(2), paragraph (c)(1), the introductory text of paragraphs (c)(2) and (d)(1), and paragraphs (d)(2), (d)(3), and (e) to read as follows:

§ 171.15 Annual fees: Reactor licenses and independent spent fuel storage licenses.

(a) Each person holding an operating license for a power, test, or research reactor; each person holding a combined license under part 52 of this chapter after the Commission has made the finding under 10 CFR 52.103(g); each person holding a part 50 or part 52 power reactor license that is in decommissioning or possession only status, except those that have no spent fuel onsite; and each person holding a part 72 license who does not hold a part 50 or part 52 license and provides notification in accordance with 10 CFR 72.80(g), shall pay the annual fee for each license held during the Federal fiscal year in which the fee is due. This paragraph does not apply to test or research reactors exempted under § 171.11(a).

(b)(1) The FY 2014 annual fee for each operating power reactor which must be collected by September 30, 2014, is $5,223,000.

(2) The FY 2014 annual fees are comprised of a base annual fee for power reactors licensed to operate, a base spent fuel storage/reactor decommissioning annual fee, and associated additional charges (fee-relief adjustment). The activities comprising the spent storage/reactor decommissioning base annual fee are shown in paragraphs (c)(2)(i) and (ii) of this section. The activities comprising the FY 2014 fee-relief adjustment are shown in paragraph (d)(1) of this section. The activities comprising the FY 2014 base annual fee for operating power reactors are as follows:

* * * * *

(c)(1) The FY 2014 annual fee for each power reactor holding a 10 CFR part 50 license that is in a decommissioning or possession-only status and has spent fuel onsite, and for each independent spent fuel storage 10 CFR part 72 licensee who does not hold a 10 CFR part 50 license, is $224,000.

(2) The FY 2014 annual fee is comprised of a base spent fuel storage/reactor decommissioning annual fee (which is also included in the operating power reactor annual fee shown in paragraph (b) of this section) and a fee-relief adjustment. The activities comprising the FY 2014 fee-relief adjustment are shown in paragraph (d)(1) of this section. The activities comprising the FY 2014 spent fuel storage/reactor decommissioning rebaselined annual fee are:

* * * * *

(d)(1) The fee-relief adjustment allocated to annual fees includes a surcharge for the activities listed in paragraph (d)(1)(i) of this section, plus the amount remaining after total budgeted resources for the activities included in paragraphs (d)(1)(ii) and (d)(1)(iii) of this section are reduced by the appropriations the NRC receives for

these types of activities. If the NRC's appropriations for these types of activities are greater than the budgeted resources for the activities included in paragraphs (d)(1)(ii) and (d)(1)(iii) of this section for a given FY, annual fees will be reduced. The activities comprising the FY 2014 fee-relief adjustment are as follows:

* * * * *

(2) The total FY 2014 fee-relief adjustment allocated to the operating power reactor class of licenses is a $621,500 fee-relief surplus, not including the amount allocated to the spent fuel storage/reactor decommissioning class. The FY 2014 operating power reactor fee-relief adjustment to be assessed to each operating power reactor is approximately a $6,094 fee relief surplus. This amount is calculated by dividing the total operating power reactor fee-relief surplus adjustment, $621,500 by the number of operating power reactors (100).

(3) The FY 2014 fee-relief adjustment allocated to the spent fuel storage/reactor decommissioning class of licenses is a −$44,500 fee-relief assessment. The FY 2014 spent fuel storage/reactor decommissioning fee-relief adjustment to be assessed to each operating power reactor, each power reactor in decommissioning or possession-only status that has spent fuel onsite, and to each independent spent fuel storage 10 CFR part 72 licensee who does not hold a 10 CFR part 50 license, is a −$361 fee-relief assessment. This amount is calculated by dividing the total fee-relief adjustment costs allocated to this class by the total number of power reactor licenses, except those that permanently ceased operations and have no fuel onsite, and 10 CFR part 72 licensees who do not hold a 10 CFR part 50 license.

(e) The FY 2014 annual fees for licensees authorized to operate a research or test (nonpower) reactor licensed under part 50 of this chapter, unless the reactor is exempted from fees under § 171.11(a), are as follows:

Research reactor	$84,500
Test reactor	84,500

■ 10. In § 171.16, revise paragraph (d) and the introductory text of paragraph (e) to read as follows:

§ 171.16 Annual fees: Materials licensees, holders of certificates of compliance, holders of sealed source and device registrations, holders of quality assurance program approvals, and government agencies licensed by the NRC.

* * * * *

(d) The FY 2014 annual fees are comprised of a base annual fee and an allocation for fee-relief adjustment. The activities comprising the FY 2014 fee-relief adjustment are shown for convenience in paragraph (e) of this section. The FY 2014 annual fees for materials licensees and holders of certificates, registrations, or approvals subject to fees under this section are shown in the following table:

SCHEDULE OF MATERIALS ANNUAL FEES AND FEES FOR GOVERNMENT AGENCIES LICENSED BY NRC

[See footnotes at end of table]

Category of materials licenses	Annual fees [1 2 3]
1. Special nuclear material:	
A. (1) Licenses for possession and use of U–235 or plutonium for fuel fabrication activities:	
(a) Strategic Special Nuclear Material (High Enriched Uranium) [Program Code(s): 21130]	$7,175,000.
(b) Low Enriched Uranium in Dispersible Form Used for Fabrication of Power Reactor Fuel [Program Code(s): 21210].	$2,469,000.
(2) All other special nuclear materials licenses not included in Category 1.A.(1) which are licensed for fuel cycle activities:	
(a) Facilities with limited operations [Program Code(s): 21310, 21320]	$747,000.
(b) Gas centrifuge enrichment demonstration facilities	$1,389,000.
(c) Others, including hot cell facilities	$694,000.
B. Licenses for receipt and storage of spent fuel and reactor-related Greater than Class C (GTCC) waste at an independent spent fuel storage installation (ISFSI) [Program Code(s): 23200].	N/A.[11]
C. Licenses for possession and use of special nuclear material of less than a critical mass, as defined in § 70.4 of this chapter, in sealed sources contained in devices used in industrial measuring systems, including x-ray fluorescence analyzers.[15] [Program Code(s): 22140].	$3,800.
D. All other special nuclear material licenses, except licenses authorizing special nuclear material in sealed or unsealed form in combination that would constitute a critical mass, as defined in § 70.4 of this chapter, for which the licensee shall pay the same fees as those under Category 1.A.[15] [Program Code(s): 22110, 22111, 22120, 22131, 22136, 22150, 22151, 22161, 22170, 23100, 23300, 23310].	$7,400.
E. Licenses or certificates for the operation of a uranium enrichment facility [Program Code(s): 21200]	$3,395,000.
F. For special nuclear materials licenses in sealed or unsealed form of greater than a critical mass as defined in § 70.4 of this chapter.[15] [Program Code: 22155].	$7,500.
2. Source material:	
A. (1) Licenses for possession and use of source material for refining uranium mill concentrates to uranium hexafluoride or for deconverting uranium hexafluoride in the production of uranium oxides for disposal. [Program Code: 11400].	$1,466,000.
(2) Licenses for possession and use of source material in recovery operations such as milling, in-situ recovery, heap-leaching, ore buying stations, ion-exchange facilities and in-processing of ores containing source material for extraction of metals other than uranium or thorium, including licenses authorizing the possession of byproduct waste material (tailings) from source material recovery operations, as well as licenses authorizing the possession and maintenance of a facility in a standby mode.	
(a) Conventional and Heap Leach facilities [Program Code(s): 11100]	$33,800.
(b) Basic *In Situ* Recovery facilities [Program Code(s): 11500]	$42,800.
(c) Expanded *In Situ* Recovery facilities [Program Code(s): 11510]	$48,500.
(d) *In Situ* Recovery Resin facilities [Program Code(s): 11550]	$0.
(e) Resin Toll Milling facilities [Program Code(s): 11555]	N/A.[5]
(f) Other facilities[4] [Program Code(s): 11700]	N/A.[5]
(3) Licenses that authorize the receipt of byproduct material, as defined in Section 11e.(2) of the Atomic Energy Act, from other persons for possession and disposal, except those licenses subject to the fees in Category 2.A.(2) or Category 2.A.(4) [Program Code(s): 11600, 12000].	N/A.[5]

SCHEDULE OF MATERIALS ANNUAL FEES AND FEES FOR GOVERNMENT AGENCIES LICENSED BY NRC—Continued

[See footnotes at end of table]

Category of materials licenses	Annual fees [1 2 3]
(4) Licenses that authorize the receipt of byproduct material, as defined in Section 11e.(2) of the Atomic Energy Act, from other persons for possession and disposal incidental to the disposal of the uranium waste tailings generated by the licensee's milling operations, except those licenses subject to the fees in Category 2.A.(2) [Program Code(s): 12010].	$19,200.
(5) Licenses that authorize the possession of source material related to removal of contaminants (source material) from drinking water [Program Code(s): 11820].	$5,600.
B. Licenses that authorize possession, use, and/or installation of source material for shielding.[16 17 18] [Program Code: 11210].	$3,300.
C. Licenses to distribute items containing source material to persons exempt from the licensing requirements of part 40 of this chapter. [Program Code: 11240].	$12,500.
D. Licenses to distribute source material to persons generally licensed under part 40 of this chapter [Program Code(s): 11230 and 11231].	$5,100.
E. Licenses for possession and use of source material for processing or manufacturing of products or materials containing source material for commercial distribution. [Program Code: 11710].	$7,800.
F. All other source material licenses. [Program Code(s): 11200, 11220, 11221, 11300, 11800, 11810]	$8,600.
3. Byproduct material:	
A. Licenses of broad scope for possession and use of byproduct material issued under parts 30 and 33 of this chapter for processing or manufacturing of items containing byproduct material for commercial distribution [Program Code(s): 03211, 03212, 03213].	$55,100.
B. Other licenses for possession and use of byproduct material issued under part 30 of this chapter for processing or manufacturing of items containing byproduct material for commercial distribution [Program Code(s): 03214, 03215, 22135, 22162].	$13,800.
C. Licenses issued under §§ 32.72 and/or 32.74 of this chapter authorizing the processing or manufacturing and distribution or redistribution of radiopharmaceuticals, generators, reagent kits, and/or sources and devices containing byproduct material. This category also includes the possession and use of source material for shielding authorized under part 40 of this chapter when included on the same license. This category does not apply to licenses issued to nonprofit educational institutions whose processing or manufacturing is exempt under § 171.11(a)(1). [Program Code(s): 02500, 02511, 02513].	$20,200.
D. [Reserved]	N/A.[5]
E. Licenses for possession and use of byproduct material in sealed sources for irradiation of materials in which the source is not removed from its shield (self-shielded units) [Program Code(s): 03510, 03520].	$9,500.
F. Licenses for possession and use of less than 10,000 curies of byproduct material in sealed sources for irradiation of materials in which the source is exposed for irradiation purposes. This category also includes underwater irradiators for irradiation of materials in which the source is not exposed for irradiation purposes [Program Code(s): 03511].	$13,900.
G. Licenses for possession and use of 10,000 curies or more of byproduct material in sealed sources for irradiation of materials in which the source is exposed for irradiation purposes. This category also includes underwater irradiators for irradiation of materials in which the source is not exposed for irradiation purposes [Program Code(s): 03521].	$127,900.
H. Licenses issued under subpart A of part 32 of this chapter to distribute items containing byproduct material that require device review to persons exempt from the licensing requirements of part 30 of this chapter, except specific licenses authorizing redistribution of items that have been authorized for distribution to persons exempt from the licensing requirements of part 30 of this chapter [Program Code(s): 03254, 03255].	$10,700.
I. Licenses issued under subpart A of part 32 of this chapter to distribute items containing byproduct material or quantities of byproduct material that do not require device evaluation to persons exempt from the licensing requirements of part 30 of this chapter, except for specific licenses authorizing redistribution of items that have been authorized for distribution to persons exempt from the licensing requirements of part 30 of this chapter [Program Code(s): 03250, 03251, 03252, 03253, 03256].	$20,800.
J. Licenses issued under subpart B of part 32 of this chapter to distribute items containing byproduct material that require sealed source and/or device review to persons generally licensed under part 31 of this chapter, except specific licenses authorizing redistribution of items that have been authorized for distribution to persons generally licensed under part 31 of this chapter [Program Code(s): 03240, 03241, 03243].	$5,100.
K. Licenses issued under subpart B of part 32 of this chapter to distribute items containing byproduct material or quantities of byproduct material that do not require sealed source and/or device review to persons generally licensed under part 31 of this chapter, except specific licenses authorizing redistribution of items that have been authorized for distribution to persons generally licensed under part 31 of this chapter [Program Code(s): 03242, 03244].	$4,100.
L. Licenses of broad scope for possession and use of byproduct material issued under parts 30 and 33 of this chapter for research and development that do not authorize commercial distribution [Program Code(s): 01100, 01110, 01120, 03610, 03611, 03612, 03613].	$17,500.
M. Other licenses for possession and use of byproduct material issued under part 30 of this chapter for research and development that do not authorize commercial distribution [Program Code(s): 03620].	$10,000.
N. Licenses that authorize services for other licensees, except: (1) Licenses that authorize only calibration and/or leak testing services are subject to the fees specified in fee Category 3.P.; and (2) Licenses that authorize waste disposal services are subject to the fees specified in fee categories 4.A., 4.B., and 4.C. [Program Code(s): 03219, 03225, 03226].	$18,000.
O. Licenses for possession and use of byproduct material issued under part 34 of this chapter for industrial radiography operations. This category also includes the possession and use of source material for shielding authorized under part 40 of this chapter when authorized on the same license [Program Code(s): 03310, 03320].	$29,800.
P. All other specific byproduct material licenses, except those in Categories 4.A. through 9.D.[19] [Program Code(s): 02400, 02410, 03120, 03121, 03122, 03123, 03124, 03140, 03130, 03220, 03221, 03222, 03800, 03810, 22130].	$6,800.
Q. Registration of devices generally licensed under part 31 of this chapter	N/A.[13]

SCHEDULE OF MATERIALS ANNUAL FEES AND FEES FOR GOVERNMENT AGENCIES LICENSED BY NRC—Continued

[See footnotes at end of table]

Category of materials licenses	Annual fees [1 2 3]
R. Possession of items or products containing radium–226 identified in 10 CFR 31.12 which exceed the number of items or limits specified in that section:[14]	
1. Possession of quantities exceeding the number of items or limits in 10 CFR 31.12(a)(4), or (5) but less than or equal to 10 times the number of items or limits specified [Program Code(s): 02700].	$9,600.
2. Possession of quantities exceeding 10 times the number of items or limits specified in 10 CFR 31.12(a)(4) or (5) [Program Code(s): 02710].	$9,200.
S. Licenses for production of accelerator-produced radionuclides [Program Code(s): 03210]	$33,000.
4. Waste disposal and processing:	
A. Licenses specifically authorizing the receipt of waste byproduct material, source material, or special nuclear material from other persons for the purpose of contingency storage or commercial land disposal by the licensee; or licenses authorizing contingency storage of low-level radioactive waste at the site of nuclear power reactors; or licenses for receipt of waste from other persons for incineration or other treatment, packaging of resulting waste and residues, and transfer of packages to another person authorized to receive or dispose of waste material [Program Code(s): 03231, 03233, 03235, 03236, 06100, 06101].	N/A.[5]
B. Licenses specifically authorizing the receipt of waste byproduct material, source material, or special nuclear material from other persons for the purpose of packaging or repackaging the material. The licensee will dispose of the material by transfer to another person authorized to receive or dispose of the material [Program Code(s): 03234].	$21,100.
C. Licenses specifically authorizing the receipt of prepackaged waste byproduct material, source material, or special nuclear material from other persons. The licensee will dispose of the material by transfer to another person authorized to receive or dispose of the material [Program Code(s): 03232].	$16,700.
5. Well logging:	
A. Licenses for possession and use of byproduct material, source material, and/or special nuclear material for well logging, well surveys, and tracer studies other than field flooding tracer studies [Program Code(s): 03110, 03111, 03112].	$13,600.
B. Licenses for possession and use of byproduct material for field flooding tracer studies. [Program Code(s): 03113]	N/A.[5]
6. Nuclear laundries:	
A. Licenses for commercial collection and laundry of items contaminated with byproduct material, source material, or special nuclear material [Program Code(s): 03218].	$44,400.
7. Medical licenses:	
A. Licenses issued under parts 30, 35, 40, and 70 of this chapter for human use of byproduct material, source material, or special nuclear material in sealed sources contained in gamma stereotactic radiosurgery units, teletherapy devices, or similar beam therapy devices. This category also includes the possession and use of source material for shielding when authorized on the same license. [Program Code(s): 02300, 02310].	$23,800.
B. Licenses of broad scope issued to medical institutions or two or more physicians under parts 30, 33, 35, 40, and 70 of this chapter authorizing research and development, including human use of byproduct material, except licenses for byproduct material, source material, or special nuclear material in sealed sources contained in teletherapy devices. This category also includes the possession and use of source material for shielding when authorized on the same license.[9] [Program Code(s): 02110].	$35,700.
C. Other licenses issued under parts 30, 35, 40, and 70 of this chapter for human use of byproduct material, source material, and/or special nuclear material, except licenses for byproduct material, source material, or special nuclear material in sealed sources contained in teletherapy devices. This category also includes the possession and use of source material for shielding when authorized on the same license.[9, 20] [Program Code(s): 02120, 02121, 02200, 02201, 02210, 02220, 02230, 02231, 02240, 22160].	$9,900.
8. Civil defense:	
A. Licenses for possession and use of byproduct material, source material, or special nuclear material for civil defense activities [Program Code(s): 03710].	$9,600.
9. Device, product, or sealed source safety evaluation:	
A. Registrations issued for the safety evaluation of devices or products containing byproduct material, source material, or special nuclear material, except reactor fuel devices, for commercial distribution.	$8,600.
B. Registrations issued for the safety evaluation of devices or products containing byproduct material, source material, or special nuclear material manufactured in accordance with the unique specifications of, and for use by, a single applicant, except reactor fuel devices.	$14,500.
C. Registrations issued for the safety evaluation of sealed sources containing byproduct material, source material, or special nuclear material, except reactor fuel, for commercial distribution.	$8,400.
D. Registrations issued for the safety evaluation of sealed sources containing byproduct material, source material, or special nuclear material, manufactured in accordance with the unique specifications of, and for use by, a single applicant, except reactor fuel.	$1,700.
10. Transportation of radioactive material:	
A. Certificates of Compliance or other package approvals issued for design of casks, packages, and shipping containers:	
1. Spent Fuel, High-Level Waste, and plutonium air packages	N/A.[6]
2. Other Casks	N/A.[6]
B. Quality assurance program approvals issued under part 71 of this chapter:	
1. Users and Fabricators	N/A.[6]
2. Users	N/A.[6]
C. Evaluation of security plans, route approvals, route surveys, and transportation security devices (including immobilization devices).	N/A.[6]
11. Standardized spent fuel facilities	N/A.[6]
12. Special Projects [Program Code(s): 25110]	N/A.[6]
13. A. Spent fuel storage cask Certificate of Compliance	N/A.[6]

SCHEDULE OF MATERIALS ANNUAL FEES AND FEES FOR GOVERNMENT AGENCIES LICENSED BY NRC—Continued

[See footnotes at end of table]

Category of materials licenses	Annual fees [1 2 3]
B. General licenses for storage of spent fuel under 10 CFR 72.210	N/A.[12]
14. Decommissioning/Reclamation:	
A. Byproduct, source, or special nuclear material licenses and other approvals authorizing decommissioning, decontamination, reclamation, or site restoration activities under parts 30, 40, 70, 72, and 76 of this chapter, including master materials licenses (MMLs) [Program Code(s): 3900, 11900, 21135, 21215, 21240, 21325, 22200].	N/A.[7]
B. Site-specific decommissioning activities associated with unlicensed sites, including MMLs, whether or not the sites have been previously licensed.	N/A.[7]
15. Import and Export licenses	N/A.[8]
16. Reciprocity	N/A.[8]
17. Master materials licenses of broad scope issued to Government agencies [Program Code(s): 03614]	$383,000.
18. Department of Energy:	
A. Certificates of Compliance	$1,084,000.[10]
B. Uranium Mill Tailings Radiation Control Act (UMTRCA) activities	$815,000.

[1] Annual fees will be assessed based on whether a licensee held a valid license with the NRC authorizing possession and use of radioactive material during the current FY. The annual fee is waived for those materials licenses and holders of certificates, registrations, and approvals who either filed for termination of their licenses or approvals or filed for possession only/storage licenses before October 1, 2012, and permanently ceased licensed activities entirely before this date. Annual fees for licensees who filed for termination of a license, downgrade of a license, or for a possession-only license during the FY and for new licenses issued during the FY will be prorated in accordance with the provisions of § 171.17. If a person holds more than one license, certificate, registration, or approval, the annual fee(s) will be assessed for each license, certificate, registration, or approval held by that person. For licenses that authorize more than one activity on a single license (e.g., human use and irradiator activities), annual fees will be assessed for each category applicable to the license.

[2] Payment of the prescribed annual fee does not automatically renew the license, certificate, registration, or approval for which the fee is paid. Renewal applications must be filed in accordance with the requirements of parts 30, 40, 70, 71, 72, or 76 of this chapter.

[3] Each FY, fees for these materials licenses will be calculated and assessed in accordance with § 171.13 and will be published in the FEDERAL REGISTER for notice and comment.

[4] Other facilities include licenses for extraction of metals, heavy metals, and rare earths.

[5] There are no existing NRC licenses in these fee categories. If NRC issues a license for these categories, the Commission will consider establishing an annual fee for this type of license.

[6] Standardized spent fuel facilities, 10 CFR parts 71 and 72 Certificates of Compliance and related Quality Assurance program approvals, and special reviews, such as topical reports, are not assessed an annual fee because the generic costs of regulating these activities are primarily attributable to users of the designs, certificates, and topical reports.

[7] Licensees in this category are not assessed an annual fee because they are charged an annual fee in other categories while they are licensed to operate.

[8] No annual fee is charged because it is not practical to administer due to the relatively short life or temporary nature of the license.

[9] Separate annual fees will not be assessed for pacemaker licenses issued to medical institutions that also hold nuclear medicine licenses under fee categories 7.B. or 7.C.

[10] This includes Certificates of Compliance issued to the U.S. Department of Energy that are not funded from the Nuclear Waste Fund.

[11] See § 171.15(c).

[12] See § 171.15(c).

[13] No annual fee is charged for this category because the cost of the general license registration program applicable to licenses in this category will be recovered through 10 CFR part 170 fees.

[14] Persons who possess radium sources that are used for operational purposes in another fee category are not also subject to the fees in this category. (This exception does not apply if the radium sources are possessed for storage only.)

[15] Licensees paying annual fees under category 1.A., 1.B., and 1.E. are not subject to the annual fees for categories 1.C., 1.D., and 1.F. for sealed sources authorized in the license.

[16] Licensees paying fees under 3.O. are not subject to fees under 2.B. for possession and shielding authorized on the same license.

[17] Licensees paying fees under 3.C. are not subject to fees under 2.B. for possession and shielding authorized on the same license.

[18] Licensees paying fees under 7.C. are not subject to fees under 2.B. for possession and shielding authorized on the same license.

[19] Licensees paying fees under 3.N. are not subject to paying fees under 3.P. for calibration or leak testing services authorized on the same license.

[20] Licensees paying fees under 7.B. are not subject to paying fees under 7.C. for broad scope license licenses issued under parts 30, 35, 40, and 70 of this chapter for human use of byproduct material, source material, and/or special nuclear material, except licenses for byproduct material, source material, or special nuclear material in sealed sources contained in teletherapy devices authorized on the same license.

(e) The fee-relief adjustment allocated to annual fees includes the budgeted resources for the activities listed in paragraph (e)(1) of this section, plus the total budgeted resources for the activities included in paragraphs (e)(2) and (e)(3) of this section, as reduced by the appropriations the NRC receives for these types of activities. If the NRC's appropriations for these types of activities are greater than the budgeted resources for the activities included in paragraphs (e)(2) and (e)(3) of this section for a given FY, a negative fee-relief adjustment (or annual fee reduction) will be allocated to annual fees. The activities comprising the FY 2014 fee-relief adjustment are as follows:

* * * * *

■ 11. In § 171.19, add a new paragraph (f) to read as follows:

§ 171.19 Payment.

* * * * *

(f) The NRC is entitled to collect any underpayment of fees as a result of an error by the NRC.

Dated at Rockville, Maryland, this 16th day of June 2014.

For the Nuclear Regulatory Commission.

Mary Muessle,

Acting Chief Financial Officer.

[FR Doc. 2014–15193 Filed 6–27–14; 8:45 am]

BILLING CODE 7590–01–P

Reader Aids

Federal Register

Vol. 79, No. 125

Monday, June 30, 2014

CUSTOMER SERVICE AND INFORMATION

Federal Register/Code of Federal Regulations	
General Information, indexes and other finding aids	**202–741–6000**
Laws	**741–6000**
Presidential Documents	
Executive orders and proclamations	**741–6000**
The United States Government Manual	**741–6000**
Other Services	
Electronic and on-line services (voice)	**741–6020**
Privacy Act Compilation	**741–6064**
Public Laws Update Service (numbers, dates, etc.)	**741–6043**
TTY for the deaf-and-hard-of-hearing	**741–6086**

ELECTRONIC RESEARCH

World Wide Web

Full text of the daily Federal Register, CFR and other publications is located at: **www.fdsys.gov.**

Federal Register information and research tools, including Public Inspection List, indexes, and Code of Federal Regulations are located at: **www.ofr.gov.**

E-mail

FEDREGTOC-L (Federal Register Table of Contents LISTSERV) is an open e-mail service that provides subscribers with a digital form of the Federal Register Table of Contents. The digital form of the Federal Register Table of Contents includes HTML and PDF links to the full text of each document.

To join or leave, go to **http://listserv.access.gpo.gov** and select *Online mailing list archives, FEDREGTOC-L, Join or leave the list (or change settings);* then follow the instructions.

PENS (Public Law Electronic Notification Service) is an e-mail service that notifies subscribers of recently enacted laws.

To subscribe, go to **http://listserv.gsa.gov/archives/publaws-l.html** and select *Join or leave the list (or change settings);* then follow the instructions.

FEDREGTOC-L and **PENS** are mailing lists only. We cannot respond to specific inquiries.

Reference questions. Send questions and comments about the Federal Register system to: **fedreg.info@nara.gov**

The Federal Register staff cannot interpret specific documents or regulations.

Reminders. Effective January 1, 2009, the Reminders, including Rules Going Into Effect and Comments Due Next Week, no longer appear in the Reader Aids section of the Federal Register. This information can be found online at **http://www.regulations.gov.**

CFR Checklist. Effective January 1, 2009, the CFR Checklist no longer appears in the Federal Register. This information can be found online at **http://bookstore.gpo.gov/.**

FEDERAL REGISTER PAGES AND DATE, JUNE

31205–31842 2
31843–32156 3
32157–32432 4
32433–32632 5
32633–32858 6
32859–33042 9
33043–33418 10
33419–33646 11
33647–33848 12
33849–34212 13
34213–34402 16
34403–34620 17
34621–35032 18
35033–35278 19
35279–35478 20
35479–35680 23
35681–35910 24
35911–36182 25
36183–36386 26
36387–36628 27
36629–37154 30

CFR PARTS AFFECTED DURING JUNE

At the end of each month the Office of the Federal Register publishes separately a List of CFR Sections Affected (LSA), which lists parts and sections affected by documents published since the revision date of each title.

3 CFR

Proclamations:
9134 32423
9135 32425
9136 32427
9137 32429
9138 32431
9139 33417
9140 33645
9141 34401
9142 34997
9143 35477
9144 36179

Executive Orders:
12473 (Amended by 13669) 34999
13669 34999
13670 35029

Administrative Orders:
Memorandums:
Memorandum of June 9, 2014 33843
Memorandum of June 20, 2014 35903
Memorandum of June 23, 2014 36625
Notices:
Notice of June 10, 2014 33847
Notice of June 19, 2014 35679
Notice of June 20, 2014 35909
Notice of June 23, 2014 36181
Presidential Determinations:
No. 2014–10 of June 2, 2014 33839
No. 2014–11 of June 4, 2014 33841

5 CFR

Ch. XIV 33849

Proposed Rules:
630 35497
1653 36438
2641 33138

7 CFR

6 34213
63 31843
210 36387
220 35279
245 36387
319 32433
457 35681
932 33419
1205 36183
1410 32435
1951 31845
4274 31845

Proposed Rules:
915 35498
944 35498
1205 36241
1206 35296
1951 31884
4274 31884

9 CFR

201 32859
310 32436

10 CFR

72 35911
170 37124
171 37124
431 32050
1703 31848

Proposed Rules:
26 34641
73 34641
429 .....32020, 33870, 33873, 36242
430 .....32020, 36242
431 33877

12 CFR

5 .....35279, 36387
23 36387
37 36387
611 34621
620 34621
630 34621
710 36196
1081 34622

Proposed Rules:
Ch. I 32172
4 33260
5 33260
7 33260
14 33260
32 33260
34 33260
100 33260
116 33260
143 33260
144 33260
145 33260
146 33260
150 33260
152 33260
159 33260
160 33260
161 33260
162 33260
163 33260
174 33260
192 33260
193 33260
Ch. II 32172
Ch. III 32172
Ch. VII 32191
701 36248

709 36252
721 36264
722 36248
741 36264
1207 35960

13 CFR

121 33647
125 31848
127 31848
Proposed Rules:
121 35963

14 CFR

25 ....32633, 32635, 32636, 32637, 32639, 32640, 32642, 33043, 33669, 33673, 33674, 33675, 33677, 34215
39 ....31849, 31851, 31855, 31897, 32859, 33045, 33048, 33050, 33052, 33054, 33679, 34403, 34406, 35033, 35035, 35037, 35479, 35481, 35485, 36387, 36629, 36631, 36634, 36635, 36638
71 ....32440, 32441, 32861, 32862, 33850, 34217, 35279, 36199
91 36172
93 35488
95 36389
97 ....33420, 33421, 33426, 33430
121 32157
Proposed Rules:
25 ....31886, 33140
39 ....31229, 31231, 31233, 31888, 32195, 32197, 32500, 32881, 33484, 35099, 35966, 35968, 36440, 36442, 36666, 36669, 36672, 36675, 36678, 36680
71 ....31236, 32883, 34453, 35702
77 33145

15 CFR

730 32441
736 32612
738 32612
740 32612
742 ....32612, 34408
744 ....32441, 32612, 34217, 36199
746 32612
748 ....32612, 34221
750 32612
754 34408
758 ....32612, 34217
762 32612
772 32612
774 ....32612, 34408
902 35957
922 33851
997 32449

16 CFR

300 32157
Proposed Rules:
305 34642
306 31891

17 CFR

232 35280
Proposed Rules:
1 31238
200 36443
420 33145

18 CFR

40 35911
Proposed Rules:
40 36269
35 35501

19 CFR

201 35920
207 35920

20 CFR

404 ....33681, 33683, 35926
405 35926
416 ....33681, 33683, 35926, 36203

21 CFR

17 32643
73 33431
106 ....33056, 33057
107 33057
310 33072
314 33072
317 32464
329 33072
600 33072
872 34623
878 ....31205, 31859, 34222
Proposed Rules:
Ch. I 34668
860 33711
882 33712
1100 35711
1140 35711
1143 35711

22 CFR

9 35935
34 35282
42 32481
121 36393
123 36393
126 36393
235 35283

23 CFR

450 31214
Proposed Rules:
450 31784

24 CFR

5 ....35940, 36146
30 35041
35 35041
943 35940
982 ....35940, 36146
983 36146
1710 34224
1715 34224
1720 34224
3280 31861
3400 34224
3500 34224

25 CFR

Proposed Rules:
169 34455

26 CFR

1 ....31863, 32644, 36204, 36640
31 ....31219, 36204
54 35942
301 ....34625, 36204
Proposed Rules:
1 ....31892, 31893, 32687
301 34668

27 CFR

Proposed Rules:
9 ....34474, 36683

28 CFR

32 35490

29 CFR

2590 35942
4022 33860
4044 33860
Proposed Rules:
10 34568
825 36445
1910 32199
2550 31893

30 CFR

934 32645
944 32648
Proposed Rules:
7 31895
75 31895
1206 35102
1210 35102

31 CFR

10 34568
537 37124

32 CFR

989 35286

33 CFR

100 ....32164, 32863, 34413, 35492, 35681, 35948, 36207, 36399
117 ....31865, 32864, 33695, 33696, 33862, 33863, 34226, 34227, 34228, 34415, 34416, 34417, 34419, 35043, 35287, 35682, 36400
140 36401
146 36401
165 ....31220, 31865, 31868, 32167, 32482, 32484, 32486, 32487, 32866, 32867, 32868, 32871, 33696, 33699, 33700, 33702, 33703, 34229, 34230, 34231, 34420, 34422, 34424, 34425, 34427, 34428, 34626, 34627, 35043, 35046, 35048, 35495, 35684, 35687, 35688, 35690, 36209, 36210, 36213, 36215, 36405, 36409, 36412, 36414, 36416, 36655
168 33864
334 35049
Proposed Rules:
100 32886
165 ....31895, 32889, 34669, 34674
328 35712

34 CFR

Ch. II 34428
Ch. III 32487, 33092, 35951, 35954
Ch. VI 31870, 32651, 33432
600 35692
Proposed Rules:
Ch. III 31898, 33486, 35121
369 35502
371 35502
668 35418

36 CFR

12 33434
242 35232
294 33436
Proposed Rules:
212 34678
261 34678
1250 35127

37 CFR

Proposed Rules:
1 34681
370 33491

38 CFR

3 32653
Proposed Rules:
38 36273

39 CFR

111 ....32490, 35288
775 33095
3001 33390
3010 33820

40 CFR

Ch. I 31566
49 34231
52 ....32873, 33097, 33101, 33107, 33116, 33438, 34240, 34432, 34435, 34441, 35050, 35693, 35695, 35956, 36218, 36220, 36419, 36655
62 33456
79 36657
80 ....34242, 36657
85 36657
86 36657
141 ....35081, 36428
180 ....32169, 32662, 32666, 33458, 33465, 33469, 34629
260 36220
261 ....35290, 36220
300 ....32490, 32673, 34633, 36429, 36658
600 36657
711 35096
721 34634
761 33867
1036 36657
1037 36657
1039 36657
1042 36657
1048 36657
1054 36657
1065 36657
1066 36657
Proposed Rules:
49 32502
51 32892
52 ....32200, 33159, 34272, 34479, 34480, 35712, 36277, 36689, 36692
60 ....31901, 34830, 34960, 36880
63 36880
81 36692
110 35712

112....35712
116....35712
117....35712
122....35712
190....32521
230....35712
232....35712
300 ....32689, 35712, 36696
302....35712
312....34480
401....35712
766....34484

41 CFR

102–117....33474
102–192....33477
Proposed Rules:
300–3....36279

42 CFR

412....34444

43 CFR

10....33482
3830....36662
Proposed Rules:
4....35129
50....35296

44 CFR

64....32876
67....33868
Proposed Rules:
67....33878, 33879

45 CFR

18....32170
147....35942
153....36431
160....36432

46 CFR

Proposed Rules:
356....33160

47 CFR

1 ....31873, 32366, 36231
2....32366
22....35290
27....32366
36....36232
43....36231
54....33705, 34639
63....31873
64....33709, 35956
73....33118
97....35290
Proposed Rules:
1....31247
2....31247
20....33163
90....31247
95....31247
96....31247

48 CFR

Ch. 1....35858, 35867
2....35859
7....35859
11....35859
19....35864
23....35859
31....35865
39....35859
52....35859
202....35699
217....35699
237....35700
Proposed Rules:
2....33164
7....33164
12....33164
46....33164
52....33164
212....32522, 35713
225....35713
229....35715
235....35717
237....32522, 35717
252 ....32522, 35507, 35713, 35715, 35717

49 CFR

383....32491
390....32491
613....31214
1510....35462, 36432
Proposed Rules:
571....32211
613....31784

50 CFR

17 ....31878, 32126, 32677, 33119, 35870, 37078
23....32677
100....35232
217....32678
224....31222, 34245
229....36586
300....35957
622 ....32496, 32497, 32498, 32878, 34246, 35292
635....31227
648 ....32170, 34251, 35293, 36433
660....34269, 36239
679 ....35495, 35958, 36436
Proposed Rules:
16....35719
17 ....31901, 32900, 33169, 34685, 35303, 35509, 36698
20....32418
29....32903
223....36281
224....36281
253....36699
300....32903
402....36284
424....36284
622....31907
648....33879, 35141
660....34272
679 ....31914, 32525, 33889, 34696, 35971, 36702

LIST OF PUBLIC LAWS

Note: No public bills which have become law were received by the Office of the Federal Register for inclusion in today's **List of Public Laws**.

Last List June 12, 2014

Public Laws Electronic Notification Service (PENS)

PENS is a free electronic mail notification service of newly enacted public laws. To subscribe, go to *http://listserv.gsa.gov/archives/publaws-l.html*

Note: This service is strictly for E-mail notification of new laws. The text of laws is not available through this service. **PENS** cannot respond to specific inquiries sent to this address.